TOPIC: 291001
KNOWLEDGE: K1.01 [3.4/3.5]
QID: B1

Which one of the following describes the operation of a safety valve installed on a high pressure steam system?

A. A safety valve is initially lifted off its seat by system pressure, then is forced fully open by an air-operated piston.

B. As system pressure increases to the safety setpoint, the pressure overcomes spring force on the valve operator, causing the valve to open.

C. A safety valve will remain open until system pressure has been reduced to the pilot valve actuation setpoint.

D. When the open safety valve has returned system pressure to the lifting set point, a combination of air and steam pressure above the valve disk closes the valve.

ANSWER: B.

TOPIC: 291001
KNOWLEDGE: K1.01 [3.4/3.5]
QID: B901

Which one of the following valves provides overpressure protection to limit the internal pressure in vessels, and thus protect personnel and equipment?

A. Safety

B. Control

C. Sentinel

D. Pressure regulating

ANSWER: A.

TOPIC: 291001
KNOWLEDGE: K1.01 [3.4/3.5]
QID: B1101

Which one of the following statements describes the operation of a reactor pressure vessel safety valve?

A. An open safety valve will close when reactor pressure decreases enough for gravity and spring tension to overcome the effect of reactor pressure on the main valve disk.

B. An open safety valve will close when the pilot valve senses a reduced reactor pressure and isolates reactor pressure to the main valve disk.

C. When reactor pressure reaches the lift set point, the safety valve begins to open and will modulate to a position that is directly proportional to reactor pressure.

D. When reactor pressure reaches the lift set point, a pilot valve closes to create a differential pressure across the main valve disk, which overcomes gravity and spring tension to open the valve.

ANSWER: A.

TOPIC: 291001
KNOWLEDGE: K1.01 [3.4/3.5]
QID: B1701 (P1802)

A vertical safety valve has a compressed spring assembly that is applying 1,200 lbf to the top of the valve disk in opposition to system pressure. System pressure is being exerted on the underside of the valve disk that is 3 inches in diameter.

Which one of the following is the approximate system pressure at which the safety valve will open?

A. 44 psig

B. 64 psig

C. 128 psig

D. 170 psig

ANSWER: D.

TOPIC: 291001
KNOWLEDGE: K1.01 [3.4/3.5]
QID: B2003 (P1903)

A vertical safety valve with a 3-inch diameter disk has a spring applying 1,000 lbf to the top of the valve disk in opposition to system pressure. Which one of the following is the approximate system pressure at which the safety valve will begin to open?

A. 35 psig

B. 111 psig

C. 141 psig

D. 444 psig

ANSWER: C.

TOPIC: 291001
KNOWLEDGE: K1.01 [3.4/3.5]
QID: B2103 (P2101)

Refer to the drawing of a typical safety valve (see figure below).

The component indicated by the solid arrow is used when necessary to manually...

A. ratchet open the safety valve.

B. pop open the safety valve.

C. gag shut the safety valve.

D. determine the position of the safety valve.

ANSWER: B.

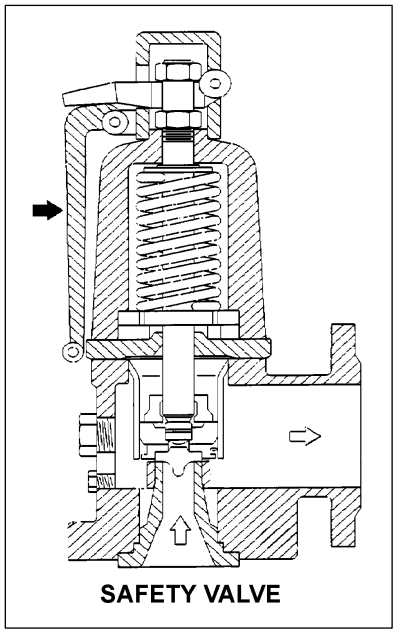

TOPIC: 291001
KNOWLEDGE: K1.01 [3.4/3.5]
QID: B2301 (P2301)

A vertical safety valve has a compressed spring assembly that is applying 2,500 lbf to the top of the valve disk in opposition to system pressure. System pressure is being exerted on the underside of the valve disk that is 5 inches in diameter.

Which one of the following is the approximate system pressure at which the safety valve will open?

A. 32 psig

B. 127 psig

C. 159 psig

D. 500 psig

ANSWER: B.

TOPIC: 291001
KNOWLEDGE: K1.01 [3.4/3.5]
QID: B2803 (P2801)

A vertical safety valve with a 2-inch diameter disk has a compressed spring applying 2,400 lbf to the top of the valve disk in opposition to system pressure. Which one of the following is the approximate system pressure at which the safety valve will open?

A. 95 psig

B. 191 psig

C. 382 psig

D. 764 psig

ANSWER: D.

TOPIC: 291001
KNOWLEDGE: K1.01 [3.4/3.5]
QID: B3401 (P3401)

Given the following pressure specifications for operation of a main steam safety valve (MSSV):

Setpoint pressure (MSSV starts to open) = 1,200 psia
Maximum pressure (MSSV will be fully open) = 1,230 psia
Reseat pressure (MSSV will be fully closed) = 1,140 psia

Which one of the following is the percent blowdown for the MSSV?

A. 2.5 percent

B. 5.0 percent

C. 7.5 percent

D. 10.0 percent

ANSWER: B.

TOPIC: 291001
KNOWLEDGE: K1.01 [3.4/3.5]
K1.02 [3.4/3.6]
QID: B4201 (P4201)

A completely full water storage tank is being hydrostatically tested to 100 psig using a positive displacement pump (PDP) with a smooth and constant discharge flow rate of 10 gpm. The tank is protected by a safety valve and a relief valve; both valves discharge to the atmosphere. Each valve has an opening setpoint of 105 psig and a maximum rated discharge flow rate of 6 gpm. The PDP is inadvertently left running when tank pressure reaches 100 psig.

With the PDP still running, tank pressure will stabilize _____ 105 psig; and the greater mass flow rate will be coming from the _____ valve.

A. at; safety

B. above; safety

C. at; relief

D. above; relief

ANSWER: B.

TOPIC: 291001
KNOWLEDGE: K1.01 [3.4/3.5]
QID: B4401 (P4401)

Given the following pressure specifications for a safety relief valve (SRV):

Setpoint pressure (SRV will start to open) = 1,200 psia
Maximum pressure (SRV will be fully open) = 1,242 psia
Reseat pressure (SRV will be fully closed) = 1,152 psia

Which one of the following is the percent accumulation for the SRV?

A. 2.5 percent

B. 3.0 percent

C. 3.5 percent

D. 4.0 percent

ANSWER: C.

TOPIC: 291001
KNOWLEDGE: K1.01 [3.4/3.5]
K1.02 [3.4/3.6]
QID: B4701 (P4701)

A completely full water storage tank is being hydrostatically tested to 200 psig using a positive displacement pump (PDP) with a smooth and constant discharge flow rate of 8 gpm. The tank is protected by a relief valve and a safety valve; both valves discharge to the atmosphere. Each valve has an opening setpoint of 205 psig and a maximum rated discharge flow rate of 6 gpm. The PDP is inadvertently left running when tank pressure reaches 200 psig.

When conditions stabilize with the PDP still running, the relief valve will be _____ open; and the safety valve will be discharging a flow rate of approximately _____ to the atmosphere.

A. partially; 6 gpm

B. partially; 2 gpm

C. fully; 6 gpm

D. fully; 2 gpm

ANSWER: A.

TOPIC: 291001
KNOWLEDGE: K1.01 [3.4/3.5]
K1.02 [3.4/3.6]
QID: B5201 (P5201)

Refer to the drawing of two identical water storage tanks (see figure below). Tank A is protected by a relief valve and Tank B is protected by a safety valve. Each valve has an opening setpoint of 205 psig and a maximum rated discharge flow rate of 8 gpm.

The tanks are being hydrostatically tested to 200 psig. Each tank is being supplied with a smooth and constant flow rate of 2 gpm from separate positive displacement pumps (PDPs). Both PDPs are inadvertently left running when tank pressures reach 200 psig.

With the PDPs running continuously, what will be the resulting status of the relief and safety valves?

	Relief Valve Status	Safety Valve Status
A.	Partially open	Partially open
B.	Partially open	Cycling between fully open and fully closed
C.	Cycling between fully open and fully closed	Partially open
D.	Cycling between fully open and fully closed	Cycling between fully open and fully closed

ANSWER: B.

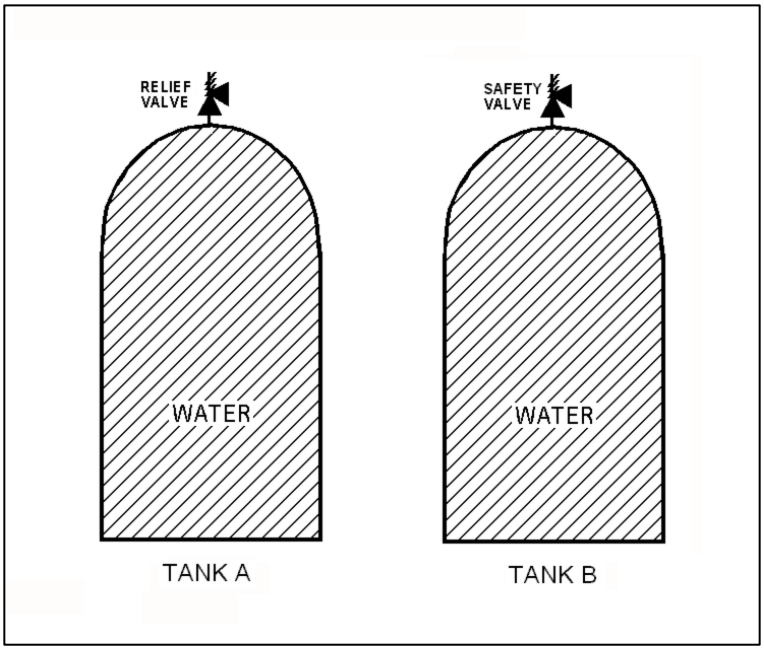

TOPIC: 291001
KNOWLEDGE: K1.01 [3.4/3.5]
K1.02 [3.4/3.6]
QID: B6101 (P6101)

A completely full water storage tank is being hydrostatically tested to 200 psig using a positive displacement pump (PDP) with a smooth and constant discharge flow rate of 8 gpm. The tank is protected by a relief valve and a safety valve that discharge to the atmosphere. The valves have the following characteristics:

- The relief valve opening setpoint is 200 psig with an accumulation of 5 percent.
- The safety valve opening setpoint is 240 psig with a blowdown of 5 percent.
- Both valves have a maximum discharge flow rate of 6 gpm.

The PDP is inadvertently left running when tank pressure reaches 200 psig.

When conditions stabilize with the PDP still running, the relief valve will be _____ open; and the safety valve will be discharging a flow rate of approximately _____ to the atmosphere.

A. partially; 6 gpm

B. partially; 2 gpm

C. fully; 6 gpm

D. fully; 2 gpm

ANSWER: D.

TOPIC: 291001
KNOWLEDGE: K1.01 [3.4/3.5]
K1.02 [3.4/3.6]
QID: B6201 (P6201)

A main steam system uses a combination of safety and relief valves for overpressure protection. Which one of the following describes a major design consideration for installing both types of valves in the same system?

A. The safety valves are installed to prevent chattering of the relief valves during normal power operation.

B. The safety valves are installed to prevent unnecessary opening of the relief valves during a steam pressure transient.

C. The relief valves are installed to prevent chattering of the safety valves during normal power operation.

D. The relief valves are installed to prevent unnecessary opening of the safety valves during a steam pressure transient.

ANSWER: D.

TOPIC: 291001
KNOWLEDGE: K1.02 [3.4/3.6]
QID: B2 (P3302)

Refer to the drawing of two identical pressure vessels with identical relief valve protection (see figure below).

Vessel A is completely filled with subcooled water at 80°F and vessel B is in a saturated, two-phase condition. Both vessels are currently pressurized to 50 psig and isolated.

If both relief valves fully open simultaneously, the faster pressure reduction will initially occur in vessel _____; and the faster mass loss will initially occur in vessel_____.

A. A; A

B. A; B

C. B; A

D. B; B

ANSWER: A.

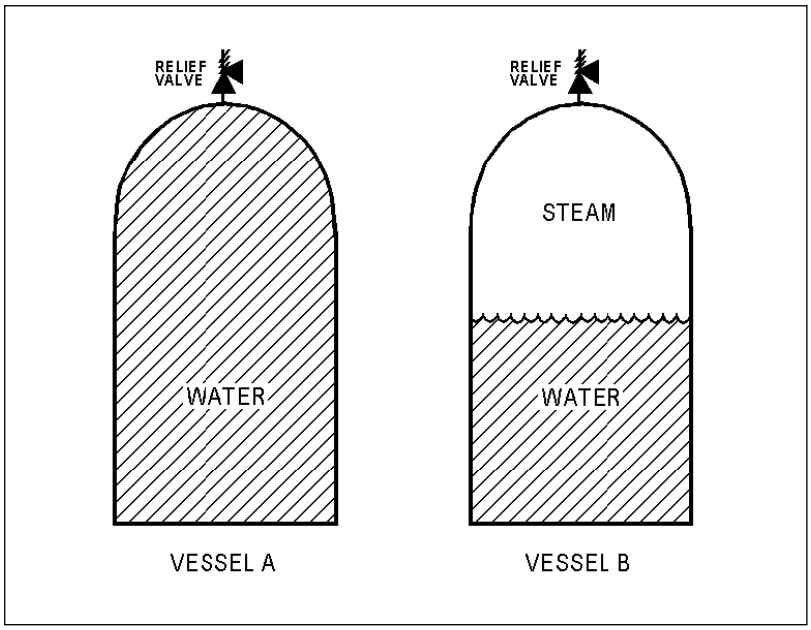

TOPIC: 291001
KNOWLEDGE: K1.02 [3.4/3.5]
QID: B201 (P501)

The difference between the setpoint pressure at which a relief valve begins to open and the pressure at which it is fully open is called...

A. setpoint deviation.

B. setpoint tolerance.

C. accumulation.

D. blowdown.

ANSWER: C.

TOPIC: 291001
KNOWLEDGE: K1.02 [3.4/3.6]
QID: B301 (P202)

The difference between the setpoint pressure at which a safety valve opens and the pressure at which it closes is called...

A. blowdown.

B. accumulation.

C. setpoint tolerance.

D. setpoint deviation.

ANSWER: A.

TOPIC: 291001
KNOWLEDGE: K1.02 [3.4/3.6]
QID: B1301 (P1801)

Refer to the drawing of two identical pressure vessels with identical relief valve protection (see figure below).

Both vessels have been pressurized to 50 psig and then isolated. Vessel A is completely filled with water at 150°F. Vessel B is in a saturated condition with one-half steam (100 percent quality) and one-half water (0 percent quality) by volume.

If both relief valves fully open simultaneously, the faster pressure reduction will occur in vessel _____; and if both relief valves close at 40 psig, the greater mass loss will have occurred in vessel _____.

A. A; A

B. A; B

C. B; A

D. B; B

ANSWER: B.

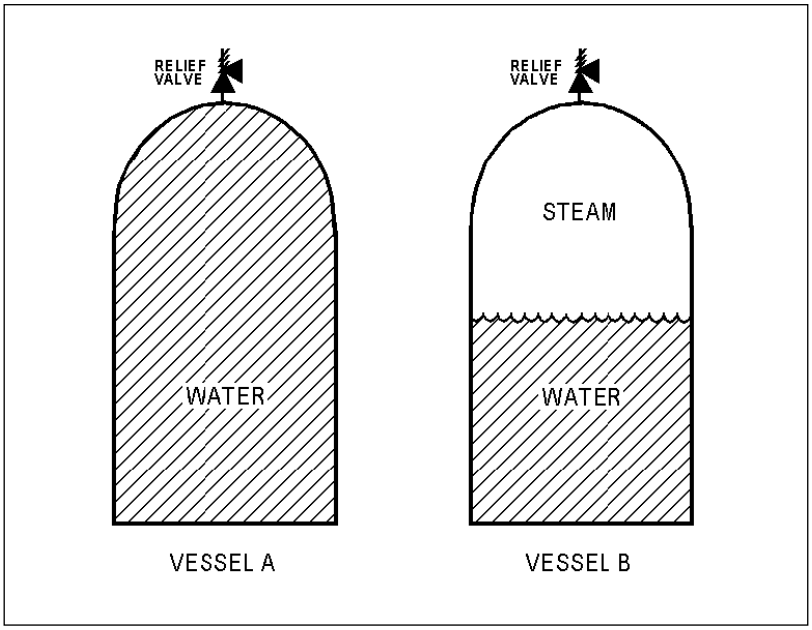

TOPIC: 291001
KNOWLEDGE: K1.02 [3.4/3.6]
QID: B1801 (P1504)

Which one of the following is a difference between a typical relief valve and a typical safety valve?

A. The actuator closing spring on a relief valve is in a compressed state whereas the actuator closing spring on a safety valve acts in tension.

B. A relief valve gradually opens as pressure increases above the setpoint pressure whereas a safety valve pops open at the setpoint pressure.

C. Relief valves are capable of being gagged whereas safety valves are not.

D. The blowdown of a relief valve is greater than the blowdown of a safety valve.

ANSWER: B.

TOPIC: 291001
KNOWLEDGE: K1.02 [3.4/3.6]
QID: B2501 (P2501)

Water storage tanks A and B are identical except that tank A receives overpressure protection from a relief valve, whereas tank B uses a safety valve. The relief valve and safety valve have the same pressure setpoints and design flow rates.

Water is continuously added to each tank at the same rate (50 percent of the design flow rate of the relief and safety valves). After the tanks are completely full, tank A pressure will _____; and tank B pressure will _____.

A. fluctuate within a few percent of the pressure setpoint; stabilize slightly above the pressure setpoint

B. fluctuate within a few percent of the pressure setpoint; fluctuate within a few percent of the pressure setpoint

C. stabilize slightly above the pressure setpoint; stabilize slightly above the pressure setpoint

D. stabilize slightly above the pressure setpoint; fluctuate within a few percent of the pressure setpoint

ANSWER: D.

TOPIC: 291001
KNOWLEDGE: K1.02 [3.4/3.6]
QID: B2701 (P2701)

Vessels A and B are identical except that vessel A receives overpressure protection from an installed safety valve. Vessel B has an installed relief valve. The safety and relief valves have the same pressure setpoint and design flow rate.

Water is continuously added to each vessel at the same rate (50 percent of the design flow rate of the safety and relief valves). After vessel pressure reaches the setpoint for each valve, vessel A pressure will _____; and vessel B pressure will _____.

A. stabilize slightly above the pressure setpoint; stabilize slightly above the pressure setpoint

B. stabilize slightly above the pressure setpoint; fluctuate within a few percent of the pressure setpoint

C. fluctuate within a few percent of the pressure setpoint; stabilize slightly above the pressure setpoint

D. fluctuate within a few percent of the pressure setpoint; fluctuate within a few percent of the pressure setpoint

ANSWER: C.

TOPIC: 291001
KNOWLEDGE: K1.02 [3.4/3.6]
QID: B6402 (P6401)

A completely full water storage tank is being hydrostatically tested to 200 psig using a positive displacement pump (PDP) with a smooth and constant discharge flow rate of 6 gpm. The tank is protected by two relief valves that discharge to the atmosphere. The relief valves have the following characteristics:

- Relief valve A opening setpoint is 200 psig with an accumulation of 1.5 percent.
- Relief valve B opening setpoint is 200 psig with an accumulation of 3.0 percent.
- Each valve has linear flow rate characteristics and a maximum discharge flow rate of 6 gpm.

The PDP is inadvertently left running when tank pressure reaches 200 psig.

With the PDP running continuously, what will be the discharge flow rates of the relief valves when tank pressure stabilizes?

	Relief Valve A	Relief Valve B
A.	1 gpm	5 gpm
B.	2 gpm	4 gpm
C.	3 gpm	3 gpm
D.	4 gpm	2 gpm

ANSWER: D.

TOPIC: 291001
KNOWLEDGE: K1.02 [3.4/3.6]
QID: B6701 (P6701)

A completely full water tank is being hydrostatically tested to 180 psig using a positive displacement pump (PDP) with a smooth and constant discharge flow rate of 6 gpm. The tank is protected by two relief valves that discharge to the atmosphere. The relief valves have the following characteristics:

- Relief valve A opening setpoint is 180 psig with an accumulation of 5 percent.
- Relief valve B opening setpoint is 200 psig with an accumulation of 5 percent.
- Each relief valve has linear flow rate characteristics and a maximum flow rate of 4 gpm.

The PDP is inadvertently left running when tank pressure reaches 180 psig.

With the PDP still running, at what pressure will the tank stabilize?

A. 190 psig

B. 195 psig

C. 205 psig

D. 210 psig

ANSWER: C.

TOPIC: 291001
KNOWLEDGE: K1.03 [2.7/2.8]
QID: B202

If a pressure control valve at the outlet of a heat exchanger opens farther, system flow rate will _____; and system head loss will _____.

A. increase; decrease

B. increase; increase

C. decrease; decrease

D. decrease; increase

ANSWER: A.

TOPIC: 291001
KNOWLEDGE: K1.03 [2.7/2.8]
QID: B2101 (P2102)

Which one of the following statements describes the flow rate characteristics of a typical gate valve in an operating water system?

A. The first 25 percent of valve disk travel in the open direction will produce a smaller change in flow rate than the last 25 percent of valve disk travel.

B. The first 25 percent of valve disk travel in the open direction will produce a greater change in flow rate than the last 25 percent of valve disk travel.

C. The first 25 percent of valve disk travel in the open direction will produce approximately the same change in flow rate as the last 25 percent of valve disk travel.

D. A gate valve that has been opened to 25 percent of valve disk travel will result in approximately 25 percent of full flow rate.

ANSWER: B.

TOPIC: 291001
KNOWLEDGE: K1.03 [3.4/3.6]
QID: B2205 (P405)

Consider a typical gate valve and a typical globe valve in the same water system application. The globe valve generally has a _____ pressure drop when fully open; and is _____ commonly used for throttling system flow.

A. smaller; less

B. larger; more

C. smaller; more

D. larger; less

ANSWER: B.

TOPIC: 291001
KNOWLEDGE: K1.03 [2.7/2.8]
QID: B2303 (P2303)

A control valve is most likely to experience cavitation when the valve is almost fully _____ because of a relatively _____ pressure drop across the valve seat.

A. open; large

B. open; small

C. closed; large

D. closed; small

ANSWER: C.

TOPIC: 291001
KNOWLEDGE: K1.03 [2.7/2.8]
QID: B2601 (P2302)

Which one of the following statements describes the flow rate characteristics of a typical globe valve in an operating water system?

A. The first 25 percent of valve disk travel in the open direction will produce a smaller increase in flow rate than the last 25 percent of valve disk travel.

B. The first 25 percent of valve disk travel in the open direction will produce a greater increase in flow rate than the last 25 percent of valve disk travel.

C. The first 25 percent of valve disk travel in the open direction will produce approximately the same increase in flow rate as the last 25 percent of valve disk travel.

D. A globe valve that has been opened to 25 percent of valve disk travel will result in approximately 25 percent of full flow rate.

ANSWER: B.

TOPIC: 291001
KNOWLEDGE: K1.03 [2.7/2.8]
QID: B3002 (P3001)

Which one of the following statements describes the throttling characteristics of a typical globe valve?

A. The first third of valve disk travel in the open direction will result in approximately one-third of full flow rate.

B. The first third of valve disk travel in the open direction will produce a smaller increase in flow rate than the last third of valve disk travel.

C. The first third of valve disk travel in the open direction will produce a greater increase in flow rate than the last third of valve disk travel.

D. The first two-thirds of valve disk travel in the open direction will produce approximately the same increase in flow rate as the last third of valve disk travel.

ANSWER: C.

TOPIC: 291001
KNOWLEDGE: K1.03 [2.7/2.8]
QID: B3902 (P3901)

Refer to the drawing of a cooling water system in which both centrifugal pumps A and B are operating (see figure below).

An operator stops pump B, but the pump B check valve fails to close. In comparison to normal operation with only pump A running, operation with the failed pump B check valve will result in pump A flow rate being _____ than normal; and heat exchanger flow rate being _____ than normal.

A. higher; higher

B. higher; lower

C. lower; higher

D. lower; lower

ANSWER: B.

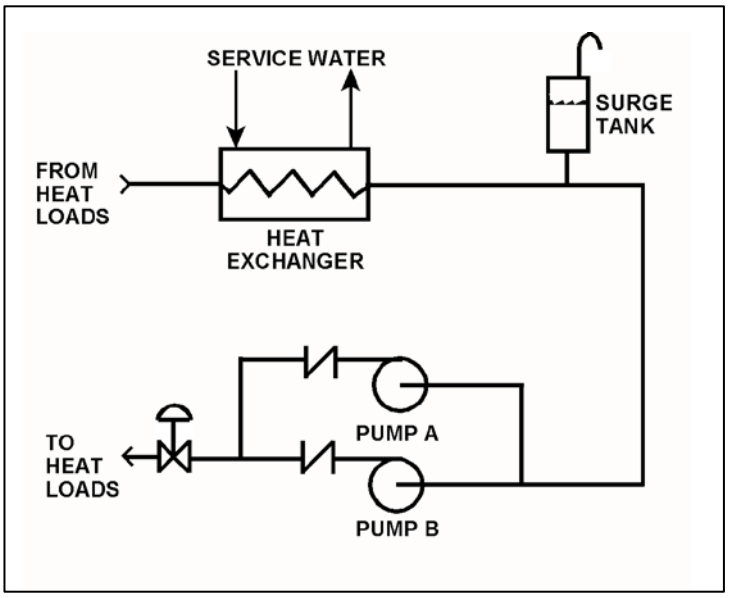

TOPIC: 291001
KNOWLEDGE: K1.03 [2.7/2.8]
QID: B4103 (P4101)

Which one of the following types of similarly sized valves in an operating water system produces the <u>least</u> frictional head loss when fully open?

A. Ball

B. Globe

C. Butterfly

D. Swing check

ANSWER: A.

TOPIC: 291001
KNOWLEDGE: K1.03 [2.7/2.8]
QID: B4802 (P4801)

Refer to the centrifugal pump operating curve with two system head loss curves (see figure below). The curves apply to an open cooling water system using one single-speed centrifugal pump discharging through a typical flow control valve.

One of the system curves shows system head loss with the flow control valve 25 percent open. The other system curve shows system head loss with the flow control valve 100 percent open. The pump is initially operating with the valve 25 percent open, resulting in a pump flow rate of 800 gpm.

If the flow control valve is subsequently fully opened, pump flow rate through the valve will be approximately...

A. 400 gpm.

B. 1,200 gpm.

C. 1,600 gpm.

D. 3,200 gpm.

ANSWER: B.

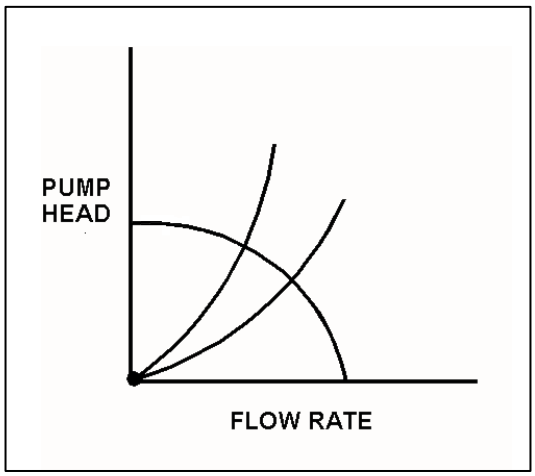

TOPIC: 291001
KNOWLEDGE: K1.03 [2.7/2.8]
QID: B4901 (P4901)

Consider a 6-inch globe valve and a 6-inch gate valve in the same water system application. Typically, the valve that requires the most linear disk travel from fully closed to fully open is the _____ valve; and the valve that produces the smallest pressure drop when fully open is the _____ valve.

A. gate; gate

B. gate; globe

C. globe; gate

D. globe; globe

ANSWER: A.

TOPIC: 291001
KNOWLEDGE: K1.03 [2.7/2.8]
QID: B6001 (P6001)

Subcooled water was flowing through a throttled valve with the following initial parameters:

Inlet pressure = 60 psia
Outlet pressure = 50 psia
Flow rate = 800 gpm

The valve was opened fully and the following parameters currently exist:

Inlet pressure = 60 psia
Outlet pressure = 55 psia

What is the approximate flow rate through the fully open valve?

A. 400 gpm

B. 566 gpm

C. 635 gpm

D. Cannot be determined without additional information.

ANSWER: D.

TOPIC: 291001
KNOWLEDGE: K1.03 [2.7/2.8]
QID: B6601 (P6601)

Subcooled water is flowing through a throttled valve in an open system. The initial stead- state conditions for the throttled valve were as follows:

Inlet pressure = 60 psia
Outlet pressure = 44 psia
Flow rate = 800 gpm

After four hours, the current steady-state conditions for the throttled valve are as follows:

Inlet pressure = 63 psia
Outlet pressure = 54 psia
Flow rate = 600 gpm

Which one of the following could be responsible for the difference between the initial and current conditions for the throttled valve?

A. The throttled valve was opened farther.

B. The throttled valve was closed farther.

C. Another valve, located upstream of the throttled valve, was partially closed.

D. Another valve, located downstream of the throttled valve, was partially closed.

ANSWER: D.

TOPIC: 291001
KNOWLEDGE: K1.03 [2.7/2.8]
QID: B7302 (P7302)

Subcooled water is flowing through a throttled valve in an open system. The initial steady-state conditions for the throttled valve are as follows:

- Inlet pressure = 60 psia
- Outlet pressure = 44 psia
- Flow rate = 800 gpm

After four hours, the current steady-state conditions for the throttled valve are as follows:

- Inlet pressure = 62 psia
- Outlet pressure = 40 psia
- Flow rate = 600 gpm

Which one of the following could be responsible for the difference between the initial and current conditions for the throttled valve?

A. The throttled valve was opened more.

B. The throttled valve was closed more.

C. Another valve, located upstream of the throttled valve, was partially closed.

D. Another valve, located downstream of the throttled valve, was partially closed.

ANSWER: B.

TOPIC: 291001
KNOWLEDGE: K1.04 [2.7/2.8]
QID: B502 (P203)

Refer to the drawing of a hydraulically-operated valve that is shown in a throttled position (see figure below).

Select the final position of this valve following a loss of hydraulic system pressure.

A. Fully open

B. As is

C. Fully closed

D. Midposition

ANSWER: A.

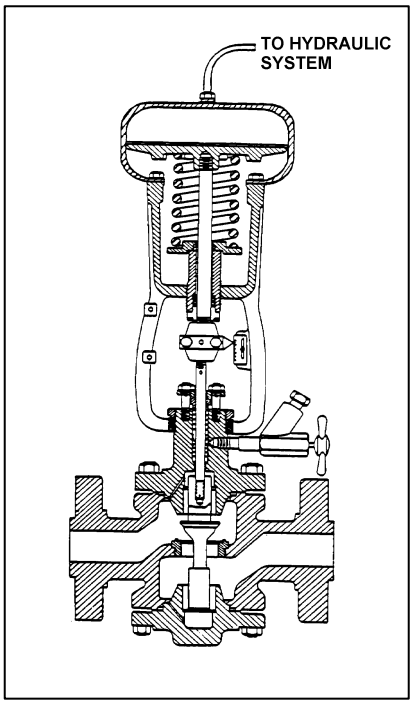

TOPIC: 291001
KNOWLEDGE: K1.04 [2.7/2.8]
QID: B602 (P1202)

How will a typical motor-operated valve respond to a loss of electrical power to the valve actuator?

A. Open fully

B. Close fully

C. Remain as is

D. Move to 50 percent open

ANSWER: C.

TOPIC: 291001
KNOWLEDGE: K1.04 [2.7/2.8]
QID: B1002 (P2104)

Refer to the drawing of a spring-loaded air-operated valve shown in a throttled position (see figure below).

Which one of the following will be the valve position following a reduction in air pressure to the valve actuator caused by a leaking air connection at the valve?

A. Original position

B. More closed

C. More open

D. Varies with system flow

ANSWER: B.

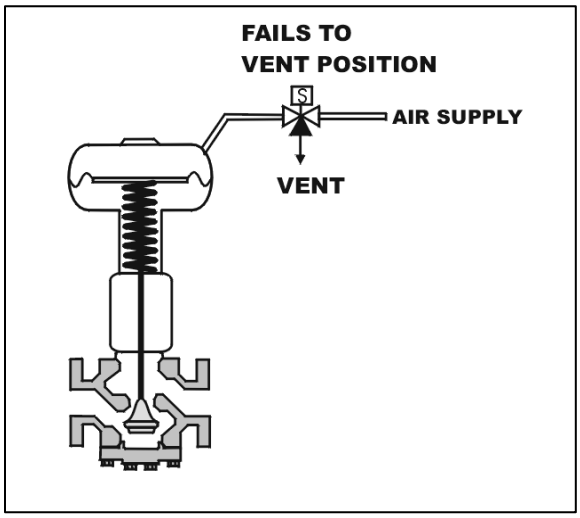

TOPIC: 291001
KNOWLEDGE: K1.04 [2.7/2.8]
QID: B1109 (P1101)

Refer to the drawing of a spring-loaded air-operated valve shown in a throttled position (see figure below).

The figure currently depicts normal air supply pressure and an energized solenoid. What will be the valve position following a loss of electrical power to the solenoid?

A. As is

B. More open

C. More closed

D. Varies with system flow

ANSWER: B.

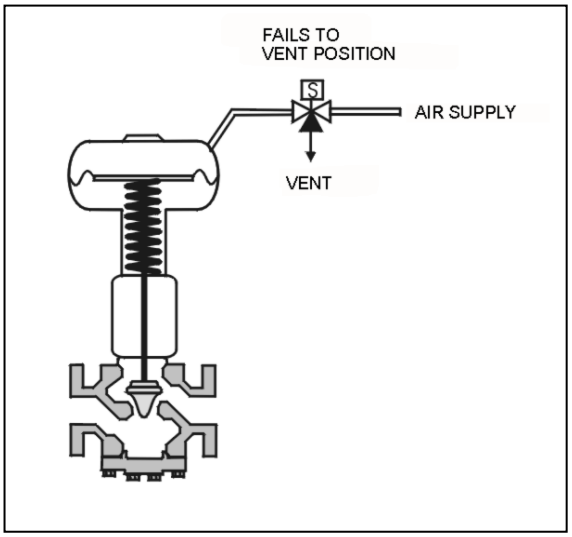

TOPIC: 291001
KNOWLEDGE: K1.04 [2.7/2.8]
QID: B1401 (P112)

Refer to the drawing of a spring-loaded air-operated valve (see figure below) in which the solenoid is shown energized.

Which one of the following will be the final valve position following a loss of electrical power to the solenoid?

A. Midposition

B. Closed

C. As is

D. Open

ANSWER: B.

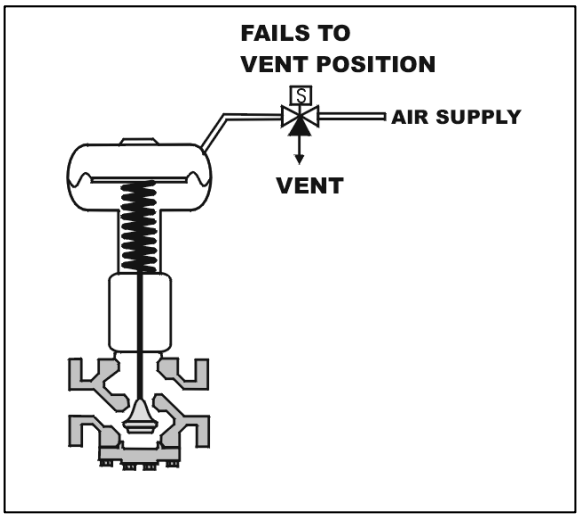

TOPIC: 291001
KNOWLEDGE: K1.04 [2.7/2.8]
QID: B1903 (P101)

Refer to the drawing of a spring-loaded air-operated valve (see figure below).

Upon a loss of air pressure, this valve will...

A. go to the fully open position.

B. remain at the current position.

C. go to the fully closed position.

D. go to the midposition.

ANSWER: C.

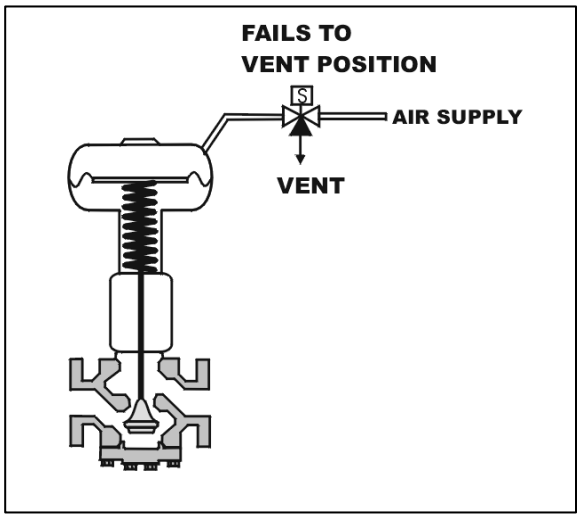

TOPIC: 291001
KNOWLEDGE: K1.04 [2.7/2.8]
QID: B5002 (P5002)

Refer to the drawing of a pneumatically-operated valve (see figure below). The valve actuator may be shown with or without air pressure applied to it.

Which one of the following describes the type of valve shown, and the fail position on loss of air to the actuator?

	Valve Type	Fail Position
A.	Gate	Open
B.	Gate	Closed
C.	Globe	Open
D.	Globe	Closed

ANSWER: C.

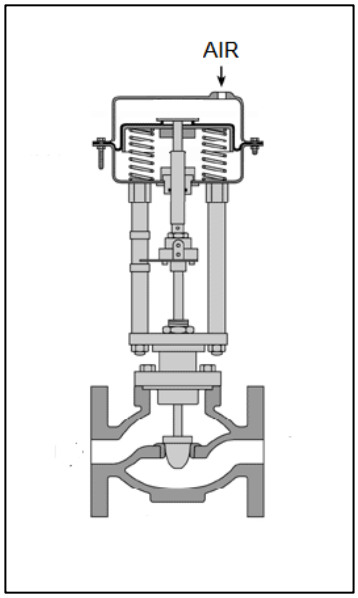

TOPIC: 291001
KNOWLEDGE: K1.04 [2.7/2.8]
QID: B5301 (P5302)

Refer to the drawing of four air-operated valves (see figure below). **Note:** The valve actuators may be shown with or without air pressure applied.

Given:

- The direction of system flow is from left to right when the valves are open.
- The internal components for each valve are identical except for the orientation of the valve disk and seat.
- The valve actuators exert the same force on the attached valve stem for a given applied air pressure.

If each actuator is vented, which valve disk will remain closed with the most force?

A. A.

B. B.

C. C.

D. D.

ANSWER: C.

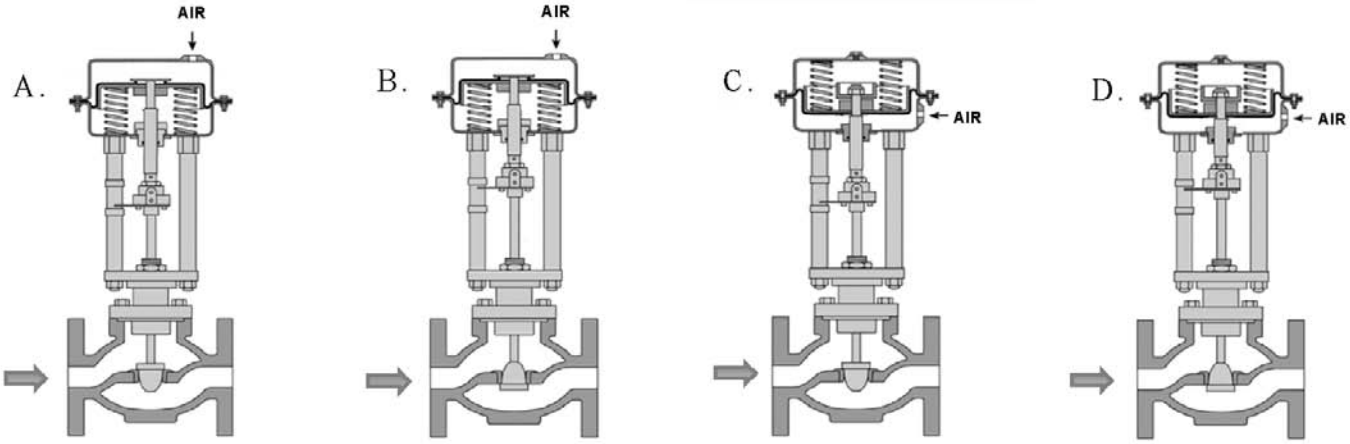

TOPIC: 291001
KNOWLEDGE: K1.04 [2.7/2.8]
QID: B5502 (P5502)

Refer to the drawing of four air-operated valves (see figure below). **Note:** The valve actuators may be shown with or without air pressure applied.

Which valves are currently shown in their failed (i.e., no air pressure applied to the actuator) positions?

A. A and B

B. B and C

C. C and D

D. D and A

ANSWER: B.

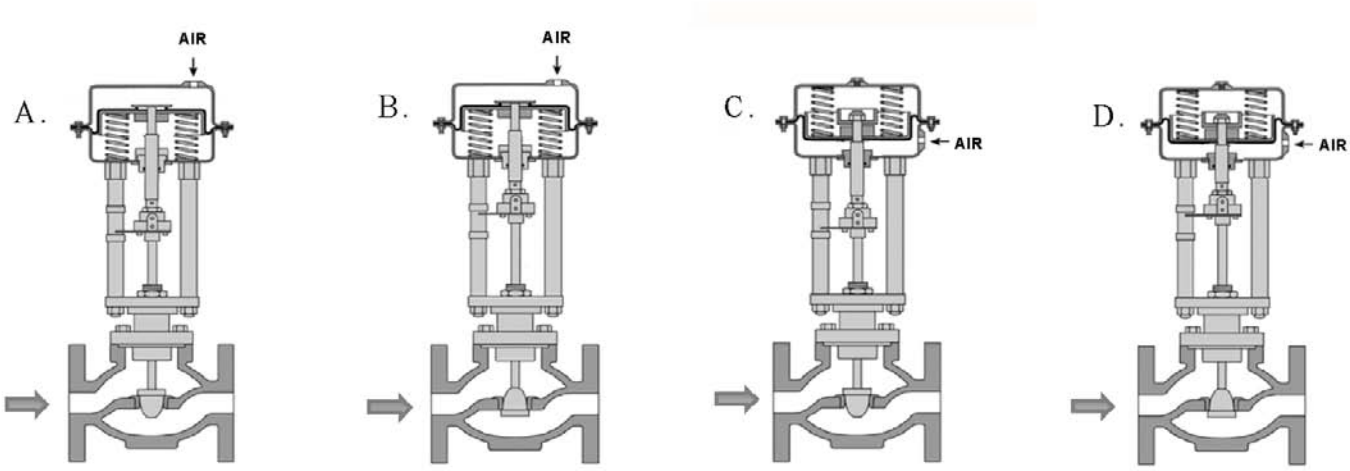

TOPIC: 291001
KNOWLEDGE: K1.04 [2.7/2.8]
QID: B5902 (P5901)

Refer to the drawing of a pneumatically-operated valve (see figure below). The valve actuator may be shown with or without applied air pressure.

Which one of the following describes the type of valve shown, and the fail position on loss of air to the actuator?

	Valve Type	Fail Position
A.	Ball	Open
B.	Ball	Closed
C.	Globe	Open
D.	Globe	Closed

ANSWER: D.

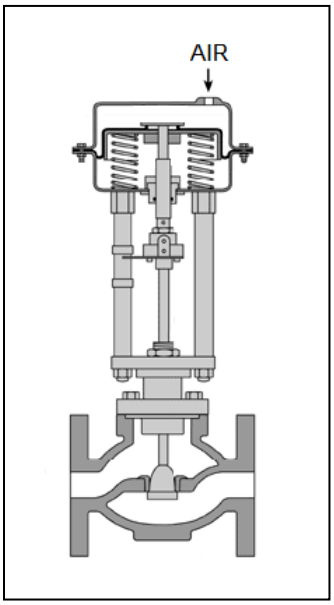

TOPIC: 291001
KNOWLEDGE: K1.05 [2.9/2.8]
QID: B203 (P2103)

Which one of the following is not a generally accepted method for locally verifying that a valve is open?

A. Observe local flow rate instrumentation.

B. Check the local valve position indicator indicates OPEN.

C. Turn the valve operator in the close direction and verify that some movement occurs.

D. Attempt to turn the valve operator in the open direction and verify that no movement occurs.

ANSWER: D.

TOPIC: 291001
KNOWLEDGE: K1.05 [3.2/3.2]
QID: B402 (P5)

To verify that a manual valve in an operating system is closed, the operator should observe valve position indication and operate the valve handwheel in the...

A. open direction until flow sounds are heard, then close the valve using normal force.

B. close direction using normal force and verify there is no substantial handwheel movement.

C. close direction until it stops, then close it an additional one-half turn using additional force if necessary.

D. open direction until the valve stem moves in the open direction, then close the valve using normal force.

ANSWER: B.

TOPIC: 291001
KNOWLEDGE: K1.05 [2.9/2.8]
QID: B503 (P205)

To verify the position of a fully open manual valve in an operating system, the operator should operate the valve handwheel...

A. in the open direction until the valve is backseated one-half turn.

B. to fully close the valve, then open the valve to the fully open position.

C. in the closed direction, then open the valve to its previously open position.

D. to open the valve until it touches the backseat, then close the valve to the desired position.

ANSWER: C.

TOPIC: 291001
KNOWLEDGE: K1.05 [2.9/2.8]
QID: B1404 (P1602)

Which one of the following is a generally accepted method for locally verifying that a manual valve is fully closed in a depressurized static piping system?

A. Check a downstream flow gauge to be indicating zero flow.

B. Visually observe the valve rising-stem threading to be fully exposed.

C. Attempt to turn the valve handwheel in the close direction and verify no movement.

D. Compare an upstream and downstream pressure gauge to ensure zero differential pressure.

ANSWER: C.

TOPIC: 291001
KNOWLEDGE: K1.05 [3.2/3.2]
QID: B1802 (P1704)

To verify a manual valve in an operating system is closed, the operator should observe valve position indication and operate the valve handwheel in the...

A. open direction at least one full rotation, then close the valve using normal force.

B. open direction until system flow is observed, then close the valve using normal force.

C. close direction using normal force and verify there is no substantial handwheel movement.

D. close direction using normal force, then operate the valve handwheel an additional one-quarter turn in the close direction.

ANSWER: C.

TOPIC: 291001
KNOWLEDGE: K1.05 [2.9/2.8]
QID: B2502 (P1602)

Which one of the following is a generally accepted method for locally verifying that a manual valve is fully closed in a depressurized piping system?

A. Check a downstream flow gauge to be indicating zero flow.

B. Compare an upstream and downstream pressure gauge to ensure zero differential pressure.

C. Attempt to turn the valve handwheel in the close direction and verify no movement.

D. Attempt to turn the valve handwheel in the open direction and verify movement.

ANSWER: C.

TOPIC: 291001
KNOWLEDGE: K1.06 [2.7/2.7]
QID: B1003 (P1603)

An adjustment has just been completed on the packing gland of an automatic valve to stop a minor stem leak. Which one of the following can occur if the technician overtightened the packing gland?

A. Decreased cooling flow to the valve internals.

B. Separation of the valve disk from the valve stem.

C. Misalignment of the valve position limit switches.

D. Increased stroke time from fully open to fully closed.

ANSWER: D.

TOPIC: 291001
KNOWLEDGE: K1.06 [2.7/2.7]
QID: B2802 (P1303)

After an adjustment of the packing gland on a valve that had a minor packing leak, an operator attempts to operate the valve, but finds the valve is stuck. What is the most probable cause?

A. The disk separated from the valve stem as a result of overtightening the packing gland.

B. The operator placed the valve in the wrong position for adjusting the packing gland.

C. The valve was overtorqued in the closed direction during the packing gland adjustment.

D. The maintenance technician overtightened the packing gland, causing the stem to bind.

ANSWER: D.

TOPIC: 291001
KNOWLEDGE: K1.06 [2.7/2.7]
QID: B3503 (P3503)

Refer to the drawing of a water supply pump with two suction sources (see figure below). All motor-operated valves (MOVs) are currently closed.

Which one of the following MOV interlocks will permit the pump to take a suction on either the building sump or the water storage tank, while preventing the two sources from being cross-connected?

A. Neither MOV-1 nor MOV-2 can be opened unless MOV-3 is fully closed.

B. None of the MOVs can be opened unless at least one MOV remains fully closed.

C. None of the MOVs can be opened unless at least two MOVs remain fully closed.

D. Neither MOV-1 nor MOV-2 can be opened unless the other source MOV is fully closed.

ANSWER: D.

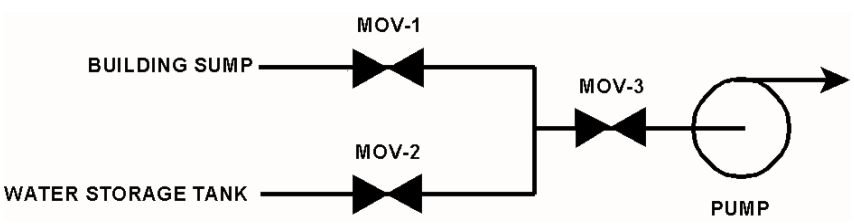

TOPIC: 291001
KNOWLEDGE: K1.07 [3.4/3.4]
QID: B1203

When transferring a valve controller from the manual mode to the automatic mode, the automatic valve controller output signal should be _____ the manual valve controller output signal at the time of transfer.

A. equal to

B. greater than

C. less than

D. increasing with

ANSWER: A.

TOPIC: 291001
KNOWLEDGE: K1.07 [3.4/3.4]
QID: B1502 (P220)

Prior to shifting a valve controller from automatic to manual control, why should the automatic and manual controller output signals be matched?

A. To ensure the valve will operate in manual control upon demand.

B. To ensure valve position indication is accurate in manual control.

C. To move the valve to the new position prior to the transfer.

D. To prevent a sudden valve repositioning during the transfer.

ANSWER: D.

TOPIC: 291001
KNOWLEDGE: K1.07 [3.4/3.4]
QID: B2204 (P802)

Two common types of check valves used in nuclear power plants are...

A. globe and gate.

B. ball and plug.

C. swing and lift.

D. needle and angle.

ANSWER: C.

TOPIC: 291001
KNOWLEDGE: K1.08 [3.4/3.5]
QID: B108 (P403)

When manually positioning a motor-operated valve, why must care be taken to avoid using excessive valve seating/backseating force?

A. Limit switch settings may change.

B. The valve may not operate on demand.

C. The motor may not reengage.

D. Torque switch settings may change.

ANSWER: B.

TOPIC: 291001
KNOWLEDGE: K1.08 [3.4/3.5]
QID: B204 (P204)

When the manual declutch lever of a motor-operated valve is moved out of the normal position, it _____ the motor and _____ the handwheel.

A. engages; engages

B. engages; disengages

C. disengages; engages

D. disengages; disengages

ANSWER: C.

TOPIC: 291001
KNOWLEDGE: K1.08 [3.4/3.5]
QID: B1605 (P1702)

A typical motor-operated valve with a declutch lever is installed in an emergency core cooling system (ECCS) application. The ECCS actuation signal is designed to energize the valve motor and open the valve. The valve is currently open, but being manually/locally closed by a technician as required by a surveillance test procedure. The declutch lever has been operated and released, and the valve is being closed by operation of the valve handwheel.

If an ECCS actuation signal is received, how will the valve be affected?

A. The handwheel will disengage and the valve will automatically open.

B. The handwheel will disengage and the valve will remain in the current position.

C. The handwheel will remain engaged and the valve will automatically open.

D. The handwheel will remain engaged and the technician can continue to close the valve.

ANSWER: A.

TOPIC: 291001
KNOWLEDGE: K1.08 [3.4/3.5]
QID: B2004 (P2003)

A surveillance test procedure is being performed on a typical motor-operated valve (MOV) with a declutch lever that is used in an emergency core cooling system (ECCS) application. The declutch lever has been operated and released, and the valve is being manually/locally opened by a technician. The MOV breaker is closed as required by the surveillance test procedure. During operation of the valve handwheel, an ECCS actuation signal is received that normally energizes the valve motor and closes the valve.

How will the valve be affected by the actuation signal?

A. The handwheel will disengage and the valve will automatically close.

B. The handwheel will disengage and the valve will remain in the current position.

C. The handwheel will remain engaged and the valve will automatically close.

D. The handwheel will remain engaged and the technician can continue to open the valve.

ANSWER: A.

TOPIC: 291001
KNOWLEDGE: K1.08 [3.4/3.5]
QID: B2603 (P2503)

When manually closing a motor-operated valve, why must the operator avoid using excessive valve seating force?

A. The valve may bind and cause the motor to trip on overload during subsequent remote operation.

B. The valve actuator clutch may be damaged and disable subsequent remote operation.

C. The valve stem limit switches may be damaged and cause inaccurate remote valve position indication.

D. The valve actuator position indicator may be damaged and cause inaccurate local valve position indication.

ANSWER: A.

TOPIC: 291001
KNOWLEDGE: K1.08 [3.4/3.5]
QID: B2704 (P2703)

A typical motor-operated valve (MOV) has just been opened from the main control room, and the breaker for the MOV has been opened. A plant operator has been directed to close the MOV locally for a surveillance test.

If the operator attempts to turn the MOV handwheel in the clockwise direction without first operating the clutch lever, which one of the following will occur?

A. The handwheel will not turn, and the valve stem will not move.

B. The handwheel will turn, but the valve stem will not move.

C. The handwheel will turn, and the valve stem will move toward the closed position because the clutch is automatically engaged when the handwheel is turned.

D. The handwheel will turn, and the valve stem will move toward the closed position because the clutch is automatically engaged when the breaker is opened.

ANSWER: B.

TOPIC: 291001
KNOWLEDGE: K1.08 [3.4/3.5]
QID: B4003 (P4002)

Which one of the following types of similarly sized valves requires the most manual valve stem rotation to move the valve from fully open to fully closed? (Assume that each valve has a non-rising stem.)

A. Ball

B. Gate

C. Plug

D. Butterfly

ANSWER: B.

TOPIC: 291001
KNOWLEDGE: K1.09 [2.7/2.7]
QID: B3304 (P3304)

A typical motor-operated valve has been returned to service following a complete maintenance overhaul of the valve and actuator. The valve was remotely opened and closed to verify operability. The measured valve stroke time in each direction was 15 seconds, which is 25 percent longer than normal.

Which one of the following could have caused the increased stroke time?

A. The valve position limit switches were removed and were <u>not</u> reinstalled.

B. The valve torque limit switches were misadjusted to open at half their normal setpoints.

C. The valve was packed with improved packing material having a lower friction coefficient.

D. The valve stem packing gland was overtightened after the packing material was replaced.

ANSWER: D.

TOPIC: 291001
KNOWLEDGE: K1.10 [3.1/3.1]
QID: B205 (P1503)

Check valves are normally used to prevent...

A. overpressurization of nonoperating system piping and components.

B. backflow through nonoperating components or flowpaths.

C. pump runout by providing a constant backpressure.

D. pump cavitation by keeping nonoperating systems filled.

ANSWER: B.

TOPIC: 291001
KNOWLEDGE: K1.10 [3.1/3.1]
QID: B302 (P303)

A stop check valve is a type of check valve that...

A. cannot be shut remotely.

B. can be used to prevent flow in both directions.

C. contains both a gate valve disk and a check valve disk.

D. can be opened manually to allow flow in both directions.

ANSWER: B.

TOPIC: 291001
KNOWLEDGE: K1.10 [3.1/3.1]
QID: B1102 (P2202)

Which one of the following is the type of valve used to control the direction of fluid flow through a system and prevent backflow?

A. Butterfly valve

B. Gate valve

C. Globe valve

D. Check valve

ANSWER: D.

TOPIC: 291001
KNOWLEDGE: K1.10 [3.1/3.1]
QID: B2903 (P1003)

A typical check valve is designed to...

A. permit flow in only one direction.

B. prevent system overpressure.

C. isolate system components.

D. perform automatic pump venting.

ANSWER: A.

TOPIC: 291001
KNOWLEDGE: K1.11 [3.2/3.2]
QID: B6 (P1902)

Which one of the following describes the function and use of the backseat on a manual valve?

A. Removes pressure from the packing/stuffing box and is typically used to isolate the stuffing box for valve repacking.

B. Removes pressure from the packing/stuffing box and is typically used when needed to isolate packing leakage.

C. Acts as a backup in case the primary seat leaks and is typically used during system isolation for personnel protection.

D. Acts as a backup in case the primary seat leaks and is typically used when needed to prevent the primary seat from leaking excessively.

ANSWER: B.

TOPIC: 291001
KNOWLEDGE: K1.11 [3.2/3.2]
QID: B206 (P201)

An operator attempts to close a fully-open upright manual gate valve to isolate a pump in a cooling water system that has been cooled down for maintenance. However, the operator is unable to rotate the handwheel in the close direction.

Which one of the following could cause this condition?

A. A hydraulic lock has developed under the valve disk.

B. A hydraulic lock has developed in the valve bonnet between the valve disk and the packing gland.

C. The two halves of the valve disk have expanded and are jammed against the valve seats.

D. The valve disk has jammed against its backseat by the difference in the thermal contraction of the stem and the bonnet.

ANSWER: D.

TOPIC: 291001
KNOWLEDGE: K1.11 [3.2/3.2]
QID: B1705 (P1405)

Refer to the drawing of a valve (see figure below).

Which one of the following describes the type of valve shown?

A. Rising-stem globe valve

B. Nonrising-stem globe valve

C. Rising-stem gate valve

D. Nonrising-stem gate valve

ANSWER: D.

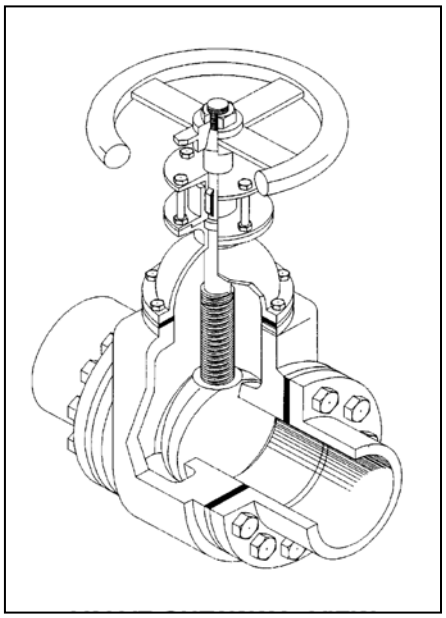

TOPIC: 291001
KNOWLEDGE: K1.11 [3.2/3.2]
QID: B2504 (P2504)

In a comparison between butterfly valves and ball valves, _____ valves are generally more leak-tight in high pressure applications; and _____ valves generally exhibit the smaller pressure decrease when fully open.

A. ball; ball

B. ball; butterfly

C. butterfly; ball

D. butterfly; butterfly

ANSWER: A.

TOPIC: 291001
KNOWLEDGE: K1.11 [3.2/3.2]
QID: B2904 (P2903)

In a comparison between ball valves and butterfly valves in the same water system application, the valve that typically would allow more leakage when fully closed with a high differential pressure is the _____ valve; and the valve that typically would cause the greater pressure loss when fully open is the _____ valve.

A. ball; butterfly

B. ball; ball

C. butterfly; butterfly

D. butterfly; ball

ANSWER: C.

TOPIC: 291001
KNOWLEDGE: K1.11 [3.2/3.2]
QID: B3804 (P3804)

In a comparison between ball valves and butterfly valves in the same water system application, the valve that would typically be more leak-tight when fully closed with a high differential pressure is the _____ valve; and the valve that typically results in the greater pressure decrease when fully open is the _____ valve.

A. ball; butterfly

B. ball; ball

C. butterfly; butterfly

D. butterfly; ball

ANSWER: A.

TOPIC: 291001
KNOWLEDGE: K1.11 [3.2/3.2]
QID: B7003 (P7002)

In a comparison between ball valves and butterfly valves in the same cooling water system application, the valve that would typically experience the greater seat leakage when fully closed with a large differential pressure is the _____ valve; and the valve that would typically cause the smaller head loss when fully open is the _____ valve.

A. ball; butterfly

B. ball; ball

C. butterfly; butterfly

D. butterfly; ball

ANSWER: D.

TOPIC: 291001
KNOWLEDGE: K1.12 [2.6/2.8]
QID: B16

Which one of the following valves is most likely to be used with a throttling positioner?

A. Stop valve

B. Globe valve

C. Gate valve

D. Butterfly valve

ANSWER: B.

TOPIC: 291001
KNOWLEDGE: K1.12 [2.6/2.8]
QID: B110

Some valve positioning (drive) devices are capable of stopping the valve between a fully open and a fully closed (throttled) position. Which one of the following valves has the best throttling characteristics?

A. Stop valve

B. Globe valve

C. Gate valve

D. Butterfly valve

ANSWER: B.

TOPIC: 291001
KNOWLEDGE: K1.12 [2.6/2.8]
QID: B172

Globe valves are preferred over gate valves for throttling because...

A. flow control is more linear for globe valves than for gate valves.

B. head loss from a fully open globe valve is smaller than the head loss from a fully open gate valve.

C. valve position indication for a midpositioned valve is more reliable for globe valves than for gate valves.

D. valve motor operators are more adaptable to globe valves than to gate valves.

ANSWER: A.

TOPIC: 291001
KNOWLEDGE: K1.12 [2.6/2.8]
QID: B406

Gate valves are most often used to...

A. protect system integrity by relieving excess pressure.

B. redirect fluid flow in an operating system.

C. isolate fluid flow in an operating system.

D. control fluid flow rate in an operating system.

ANSWER: C.

TOPIC: 291001
KNOWLEDGE: K1.12 [2.6/2.8]
QID: B504 (P1104)

Gate valves should not be used to throttle fluid flow because...

A. the tortuous flow path through a gate valve body makes flow control difficult.

B. gate valves must be fully opened and backseated to prevent stem leakage.

C. the turbulent flow created by a partially opened gate valve will cause erosion damage to the valve seat.

D. the large size of the gate valve disk requires an oversized actuator to accurately position the disk.

ANSWER: C.

TOPIC: 291001
KNOWLEDGE: K1.12 [2.6/2.8]
QID: B805 (P2604)

A gate valve is generally a poor choice for throttling fluid flow because...

A. the turbulent flow created by a partially opened gate valve can cause extensive damage to the valve.

B. the tortuous path through a gate valve body can make flow control difficult.

C. excessive stem leakage will result unless the gate valve is fully open or fully closed.

D. the head loss from a throttled gate valve will result in an unacceptable reduction in system flow rate.

ANSWER: A.

TOPIC: 291001
KNOWLEDGE: K1.12 [2.6/2.8]
QID: B905 (P2404)

In a comparison between gate valves and globe valves in the same water system application, gate valves...

A. are more effective at throttling flow.

B. are more effective as pressure regulating valves.

C. produce a larger pressure decrease when fully open.

D. require more force to open against large differential pressures.

ANSWER: D.

TOPIC: 291001
KNOWLEDGE: K1.12 [2.6/2.8]
QID: B1205 (P2004)

After an adjustment of the packing gland on a valve that had a minor packing leak, the operator attempts to operate the valve, but finds that the valve is stuck. What is the most probable cause?

A. The disk separated from the valve stem as a result of overtightening the packing gland.

B. The operator placed the valve in the wrong position for adjusting the packing gland.

C. The valve was overtorqued in the close direction during the packing gland adjustment.

D. The maintenance technician overtightened the packing gland, causing the stem to bind.

ANSWER: D.

TOPIC: 291001
KNOWLEDGE: K1.12 [2.6/2.8]
QID: B1305 (P1901)

Which one of the following is a disadvantage associated with using a gate valve, versus a globe valve, to throttle flow in a cooling water system?

A. The tortuous flow path through a throttled gate valve body makes flow control difficult.

B. A gate valve will experience stem leakage unless it is fully opened and backseated.

C. The turbulent flow created by a throttled gate valve will cause erosion damage to the valve seat.

D. A fully open gate valve will produce a greater system head loss than a fully open globe valve.

ANSWER: C.

TOPIC: 291001
KNOWLEDGE: K1.12 [2.6/2.8]
QID: B1604 (P1604)

In a comparison between a typical gate valve and a typical globe valve in the same water system application with both valves fully open, the gate valve has a _____ pressure drop and is normally used in _____ flow applications.

A. larger; throttling

B. larger; on/off

C. smaller; throttling

D. smaller; on/off

ANSWER: D.

TOPIC: 291001
KNOWLEDGE: K1.12 [2.6/2.8]
QID: B1805 (P1501)

Consider a 3-inch gate valve and a 3-inch globe valve in the same water system application. If both valves are fully open, the globe valve produces the _____ head loss and the _____ flow rate.

A. larger; larger

B. larger; smaller

C. smaller; larger

D. smaller; smaller

ANSWER: B.

TOPIC: 291001
KNOWLEDGE: K1.12 [2.6/2.8]
QID: B1505 (P1302)

Consider a 3-inch gate valve and a 3-inch globe valve in the same water system application. If both valves are fully open, the gate valve produces the _____ head loss and the _____ flow rate.

A. smaller; larger

B. larger; smaller

C. smaller; smaller

D. larger; larger

ANSWER: A.

TOPIC: 291001
KNOWLEDGE: K1.12 [2.6/2.8]
QID: B2005 (P602)

In a comparison between a globe valve and a gate valve in the same water system application, the gate valve has a _____ pressure drop when fully open and is the _____ choice for throttling.

A. higher; better

B. lower; better

C. higher; poorer

D. lower; poorer

ANSWER: D.

TOPIC: 291001
KNOWLEDGE: K1.12 [2.6/2.8]
QID: B2305 (P2304)

In a comparison between globe valves and gate valves in the same water system application, globe valves...

A. are less effective at throttling flow.

B. are less effective as pressure regulating valves.

C. produce a smaller pressure decrease when fully open.

D. require less force to open against large differential pressures.

ANSWER: D.

TOPIC: 291001
KNOWLEDGE: K1.12 [2.6/2.8]
QID: B2605 (P2204)

Why are gate valves generally not used to throttle water flow?

A. Rapid changes in flow direction inside the valve cause a large unrecoverable system head loss.

B. Gate valves experience stem leakage unless they are fully open or fully closed.

C. The turbulent flow created by a partially opened gate valve causes excessive seat and disk wear.

D. Flow rate through a gate valve is not proportional to the differential pressure across the valve.

ANSWER: C.

TOPIC: 291002
KNOWLEDGE: K1.01 [2.4/2.5]
QID: B9

What happens to the pressure and velocity of water as it passes through a venturi?

A. Pressure remains constant, but the velocity increases as the diameter of the venturi decreases.

B. Pressure increases, but the velocity decreases as the diameter of the venturi decreases.

C. Pressure decreases, but the velocity remains constant as the diameter of the venturi increases.

D. Pressure increases, but the velocity decreases as the diameter of the venturi increases.

ANSWER: D.

TOPIC: 291002
KNOWLEDGE: K1.01 [2.4/2.5]
QID: B159

Which one of the following is a characteristic of a venturi flow device?

A. Develops an output signal by measuring the differential pressure of the fluid as it passes through the device.

B. Can measure the rate of flow of incompressible fluids, but <u>not</u> of compressible fluids.

C. Develops an output signal by measuring the velocity of the fluid as it passes through the device.

D. Produces a head loss that is greater than the head loss produced by an orifice.

ANSWER: A.

TOPIC: 291002
KNOWLEDGE: K1.01 [2.4/2.5]
QID: B305 (P308)

A cooling water system is operating at steady-state conditions indicating 900 gpm with 60 psid across the flow transmitter venturi. If cooling water flow rate is increased to 1,800 gpm, differential pressure across the flow transmitter venturi will be approximately...

A. 85 psid.

B. 120 psid.

C. 175 psid.

D. 240 psid.

ANSWER: D.

TOPIC: 291002
KNOWLEDGE: K1.01 [2.4/2.5]
QID: B407 (P1606)

Refer to the drawing in which water is flowing through a convergent-divergent venturi (see figure below). The pipe diameters at P1 and P2 are equal.

Compared to the conditions at the inlet of the venturi (P1), the pressure at the outlet of the venturi (P2) has _____; and water velocity at the outlet of the venturi has _____. (Assume "real" conditions.)

A. remained the same; remained the same

B. remained the same; decreased slightly

C. decreased slightly; remained the same

D. decreased slightly; decreased slightly

ANSWER: C.

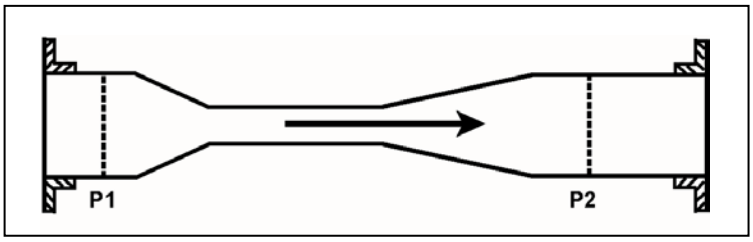

TOPIC: 291002
KNOWLEDGE: K1.01 [2.4/2.5]
QID: B508

As water flows through a venturi flow element, the _____ pressure and the _____ velocity of the fluid occurs at the throat of the venturi.

A. highest; highest

B. lowest; lowest

C. lowest; highest

D. highest; lowest

ANSWER: C.

TOPIC: 291002
KNOWLEDGE: K1.01 [2.4/2.5]
QID: B706 (P707)

A cooling water system is operating at a steady-state flow rate of 700 gpm with 60 psid across the flow transmitter venturi. If cooling water flow rate is increased to 1,000 gpm, differential pressure across the flow transmitter venturi will be...

A. 85.7 psid.

B. 122.4 psid.

C. 171.4 psid.

D. 244.8 psid.

ANSWER: B.

TOPIC: 291002
KNOWLEDGE: K1.01 [2.4/2.5]
QID: B807 (P807)

Refer to the drawing of a venturi flow element (see figure below) with direction of water flow indicated by the arrow.

Where should the high pressure tap of a differential pressure flow detector be connected?

A. Point A

B. Point B

C. Point C

D. Point D

ANSWER: A.

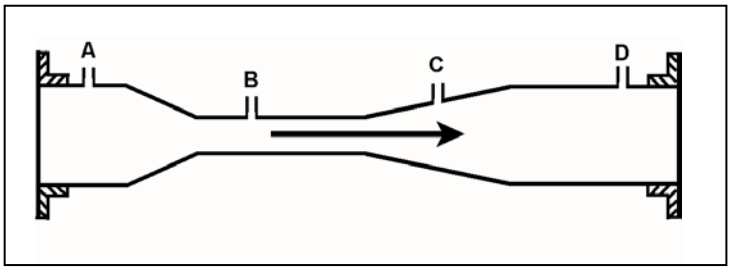

TOPIC: 291002
KNOWLEDGE: K1.01 [2.4/2.5]
QID: B907 (P1308)

Refer to the drawing of a venturi flow element in an operating cooling water system (see figure below).

A differential pressure detector measuring flow rate through the venturi will produce the highest flow rate indication if its high-pressure tap is connected at point _____; and its low-pressure tap is connected at point _____.

A. A; B

B. A; D

C. B; C

D. B; D

ANSWER: A.

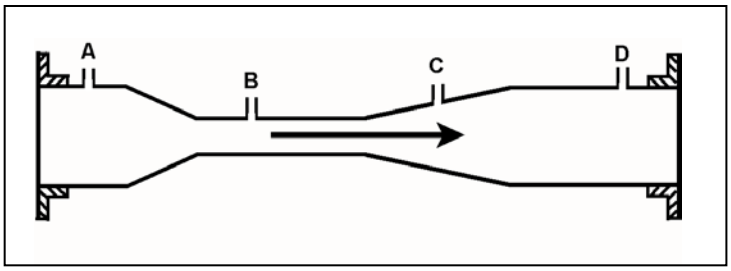

TOPIC: 291002
KNOWLEDGE: K1.01 [2.4/2.5]
QID: B2010 (P3306)

A cooling water system is operating at steady-state conditions. A calibrated system flow meter indicates 600 gpm with 50 psid across the flow element.

If cooling water flow rate increases to 900 gpm, the differential pressure sensed by the flow element will be approximately...

A. 63 psid.

B. 75 psid.

C. 97 psid.

D. 112 psid.

ANSWER: D.

TOPIC: 291002
KNOWLEDGE: K1.01 [2.4/2.5]
QID: B2106 (P908)

Which one of the following flow measuring elements produces the largest unrecoverable head loss when used in an operating fluid system?

A. Venturi

B. Flow nozzle

C. Pipe elbow

D. Orifice

ANSWER: D.

TOPIC: 291002
KNOWLEDGE: K1.01 [2.4/2.5]
QID: B2206 (P2406)

A cooling water system is operating at a steady-state flow rate of 700 gpm with 60 psid across the associated venturi flow element. If cooling water flow rate increases to 900 gpm, the differential pressure sensed by the venturi flow element will be approximately...

A. 68 psid.

B. 77 psid.

C. 99 psid.

D. 127 psid.

ANSWER: C.

TOPIC: 291002
KNOWLEDGE: K1.01 [2.4/2.5]
QID: B2306 (P2306)

A venturi is being used to measure the flow rate in a cooling water system. As the water flows from the throat to the discharge of the venturi, water pressure will _____; and volumetric flow rate will _____. (Assume water is incompressible.)

A. increase; remain the same

B. increase; increase

C. decrease; remain the same

D. decrease; decrease

ANSWER: A.

TOPIC: 291002
KNOWLEDGE: K1.01 [2.4/2.5]
QID: B2506 (P2505)

A main steam flow rate measuring instrument uses a steam pressure input to produce main steam mass flow rate indication. Assuming steam volumetric flow rate does not change, a steam pressure decrease will cause indicated steam mass flow rate to...

A. increase, because the density of the steam has increased.

B. decrease, because the density of the steam has decreased.

C. remain the same, because steam pressure does not affect the mass flow rate of steam.

D. remain the same, because the steam pressure input compensates for changes in steam pressure.

ANSWER: B.

TOPIC: 291002
KNOWLEDGE: K1.01 [2.4/2.5]
QID: B2806 (P2808)

A differential pressure detector is being used with an orifice plate to measure water flow rate through a pipe. When the flow detector was last calibrated, the following parameters were observed:

Upstream Pressure = 135 psig
Downstream Pressure = 120 psig

Actual Flow Rate = 100 gpm
Indicated Flow Rate = 100 gpm

Significant erosion of the orifice hole has occurred since the last calibration, such that actual flow rate through the orifice has increased to 120 gpm while the upstream and downstream pressures have changed to 124 psig and 109 psig respectively.

What is the currently indicated flow rate?

A. 44 gpm

B. 67 gpm

C. 100 gpm

D. 120 gpm

ANSWER: C.

TOPIC: 291002
KNOWLEDGE: K1.01 [2.4/2.5]
QID: B3206 (P3207)

A cooling water system uses a horizontal venturi with a differential pressure flow detector to provide flow rate indication. Water enters and leaves the venturi at 70°F, 120 psig, and 20 ft/sec. Water velocity at the throat of the venturi is 45 ft/sec. Assume water is incompressible and the venturi experiences no unrecoverable head loss.

What is the approximate pressure of the water at the throat of the venturi?

A. 109 psig

B. 98 psig

C. 86 psig

D. 71 psig

ANSWER: A.

TOPIC: 291002
KNOWLEDGE: K1.01 [2.4/2.5]
QID: B3306 (P1106)

Refer to the drawing of a venturi flow element in an operating cooling water system (see figure below).

At what point does the lowest pressure exist?

A. Point A

B. Point B

C. Point C

D. Point D

ANSWER: B.

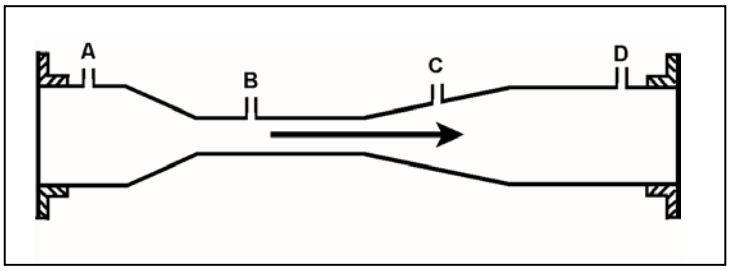

TOPIC: 291002
KNOWLEDGE: K1.01 [2.4/2.5]
QID: B3706 (P3706)

The following is the current calibration data for an orifice plate that is being used for water flow rate measurement:

Upstream Pressure = 135 psig
Downstream Pressure = 120 psig
Flow Rate = 100 gpm

During a surveillance, the following pressures are observed across the orifice plate:

Upstream Pressure = 124 psig
Downstream Pressure = 117 psig

What is the approximate water flow rate through the orifice plate?

A. 47 gpm

B. 57 gpm

C. 68 gpm

D. 78 gpm

ANSWER: C.

TOPIC: 291002
KNOWLEDGE: K1.01 [2.4/2.5]
QID: B4804 (P4804)

A cooling water system uses a horizontal venturi with a differential pressure flow detector to provide flow rate indication. Water enters and leaves the venturi at 70°F, 100 psig, and 24 ft/sec. Water velocity at the throat of the venturi is 50 ft/sec. Assume water is incompressible and the venturi experiences no unrecoverable head loss.

What is the approximate pressure of the water at the throat of the venturi?

A. 98 psig

B. 94 psig

C. 87 psig

D. 74 psig

ANSWER: C.

TOPIC: 291002
KNOWLEDGE: K1.01 [2.4/2.5]
QID: B6104 (P6103)

For water flowing through a venturi, there is a proportional relationship between flow rate and differential pressure. For steam flowing through a venturi, the relationship must be modified to account for changes in _____ as the steam flows through the venturi.

A. velocity

B. enthalpy

C. internal energy

D. specific volume

ANSWER: D.

TOPIC: 291002
KNOWLEDGE: K1.01 [2.4/2.5]
QID: B6804 (P6803)

Refer to the drawing of a frictionless venturi flow element (see figure below). Subcooled water is flowing through the venturi with the following initial conditions:

Flow rate = 500 gpm
Tap A pressure = 40 psia
Tap B pressure = 36 psia

Flow rate increases to 1,000 gpm, which results in a tap A pressure of 68 psia. What is the new pressure at tap B?

A. 60 psia

B. 52 psia

C. 44 psia

D. 32 psia

ANSWER: B.

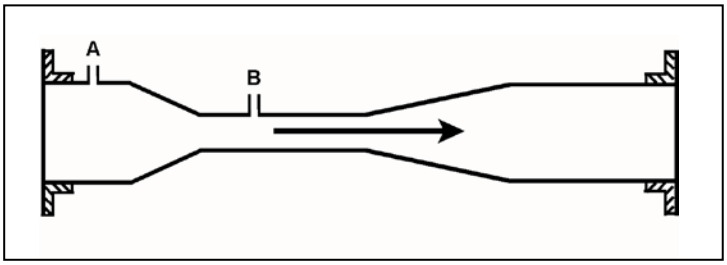

TOPIC: 291002
KNOWLEDGE: K1.02 [2.4/2.5]
QID: B10

The change in pressure across a main steam line flow element is...

A. directly proportional to the volumetric flow rate.

B. inversely proportional to the volumetric flow rate.

C. directly proportional to the mass flow rate.

D. inversely proportional to the mass flow rate.

ANSWER: A.

TOPIC: 291002
KNOWLEDGE: K1.02 [2.4/2.5]
QID: B906

If the density input to a density-compensated steam flow instrument rapidly fails high, the <u>indicated</u> flow will...

A. increase and stabilize at a new higher value.

B. increase temporarily, then return to its initial value.

C. decrease and stabilize at a new lower value.

D. decrease temporarily, then return to its initial value.

ANSWER: A.

TOPIC: 291002
KNOWLEDGE: K1.02 [2.4/2.5]
QID: B1606 (P406)

The density compensating input to a steam flow instrument is used to convert volumetric flow rate to…

A. velocity flow rate.

B. gallons per minute.

C. mass flow rate.

D. differential flow rate.

ANSWER: C.

TOPIC: 291002
KNOWLEDGE: K1.02 [2.4/2.5]
QID: B1806 (P6)

Density input is normally used in steam flow instruments to convert _____ into _____.

A. mass flow rate; volumetric flow rate

B. volumetric flow rate; mass flow rate

C. mass flow rate; differential pressure

D. differential pressure; volumetric flow rate

ANSWER: B.

TOPIC: 291002
KNOWLEDGE: K1.02 [2.4/2.6]
QID: B2906 (P305)

If the steam pressure input to a density-compensated steam flow instrument fails high, the associated flow rate indication will...

A. decrease, because the density input has decreased.

B. increase, because the density input has decreased.

C. decrease, because the density input has increased.

D. increase, because the density input has increased.

ANSWER: D.

TOPIC: 291002
KNOWLEDGE: K1.02 [2.4/2.5]
QID: B4604 (P4603)

A main steam flow rate differential pressure detector was properly calibrated to produce a main steam flow rate indication of 500,000 lbm/hr with the following initial input conditions:

Detector high pressure input = 1,000 psia
Detector low pressure input = 950 psia

The current detector input conditions are as follows:

Detector high pressure input = 985 psia
Detector low pressure input = 935 psia

Assume that the detector and associated circuitry do not have steam density compensation. Also assume that the main steam quality and volumetric flow rate do not change.

The current main steam flow rate indication is _____ 500,000 lbm/hr; and the current main steam flow rate is _____ 500,000 lbm/hr.

A. equal to; greater than

B. less than; greater than

C. equal to; less than

D. greater than; less than

ANSWER: C.

TOPIC: 291002
KNOWLEDGE: K1.02 [2.4/2.5]
QID: B4704 (P4703)

A nuclear power plant is initially operating with the following main steam parameter values:

Main steam pressure = 1,000 psia
Main steam flow rate = 500,000 lbm/hr

Main steam pressure decreases and stabilizes at 950 psia.

Assume 100 percent quality saturated steam and that main steam volumetric flow rate is the same before and after the pressure change.

Which one of the following is the approximate mass flow rate of main steam after the pressure change?

A. 528,000 lbm/hr

B. 500,000 lbm/hr

C. 472,000 lbm/hr

D. 444,000 lbm/hr

ANSWER: C.

TOPIC: 291002
KNOWLEDGE: K1.04 [2.9/3.1]
QID: B8

A leak develops in the high-pressure side of a flow detector. What effect does the leak have on the affected flow indication?

A. The measured ΔP will decrease, causing indicated flow to decrease.

B. The measured ΔP will decrease, causing indicated flow to increase.

C. The measured ΔP will increase, causing indicated flow to decrease.

D. The measured ΔP will increase, causing indicated flow to increase.

ANSWER: A.

TOPIC: 291002
KNOWLEDGE: K1.04 [2.9/3.1]
QID: B211

A differential pressure (D/P) cell is being used to measure flow rate in a cooling water system. Flow rate is indicating 75 percent of scale. If the D/P cell diaphragm ruptures, <u>indicated</u> flow rate will...

A. decrease, because low D/P is sensed.

B. decrease, because high D/P is sensed.

C. increase, because low D/P is sensed.

D. increase, because high D/P is sensed.

ANSWER: A.

TOPIC: 291002
KNOWLEDGE: K1.04 [2.9/3.1]
QID: B307 (P307)

A differential pressure flow detector is connected to a calibrated orifice in a cooling water system. Which one of the following will cause indicated volumetric flow rate to be lower than actual volumetric flow rate?

A. System pressure decreases.

B. The orifice erodes over time.

C. Debris becomes lodged in the orifice.

D. A leak develops in the low pressure sensing line.

ANSWER: B.

TOPIC: 291002
KNOWLEDGE: K1.04 [2.9/3.1]
QID: B707 (P706)

Flow rate is being measured using a differential pressure flow detector and a calibrated orifice. If actual flow rate remains constant, which one of the following will cause indicated flow rate to be higher than actual flow rate?

A. The flow detector equalizing valve is inadvertently opened.

B. A leak develops in the high pressure sensing line.

C. Debris becomes lodged in the orifice.

D. The orifice erodes over time.

ANSWER: C.

TOPIC: 291002
KNOWLEDGE: K1.04 [2.9/3.1]
QID: B1006

Which one of the following will cause indicated liquid flow rate to be higher than actual flow rate when using a differential pressure (D/P) flow detector with a calibrated orifice?

A. System pressure decreases.

B. The detector diaphragm ruptures.

C. Debris becomes lodged in the orifice.

D. The pressure surrounding the D/P detector housing decreases.

ANSWER: C.

TOPIC: 291002
KNOWLEDGE: K1.04 [2.9/3.1]
QID: B1506 (P1205)

If the orifice in a differential pressure (D/P) flow sensor erodes such that the orifice opening becomes larger, indicated flow rate will _____ due to a _____ D/P across the orifice. (Assume actual flow rate remains the same.)

A. increase; larger

B. increase; smaller

C. decrease; larger

D. decrease; smaller

ANSWER: D.

TOPIC: 291002
KNOWLEDGE: K1.04 [2.9/3.1]
QID: B1607

A flow instrument for an operating cooling water system was calibrated with the differential pressure flow detector equalizing valve slightly open. If the valve is subsequently closed, flow indication will...

A. decrease and stabilize above 0 gpm.

B. decrease and stabilize at 0 gpm.

C. increase and stabilize at the actual flow rate.

D. increase and stabilize above the actual flow rate.

ANSWER: D.

TOPIC: 291002
KNOWLEDGE: K1.04 [2.9/3.1]
QID: B2310 (P2305)

An orifice is being used in an operating cooling water system to measure flow rate. Which one of the following will cause the differential pressure sensed across the orifice to decrease?

A. System pressure decreases.

B. System flow rate decreases.

C. Debris becomes lodged in the orifice.

D. A leak develops in the low pressure sensing line.

ANSWER: B.

TOPIC: 291002
KNOWLEDGE: K1.05 [3.1/3.1]
QID: B607 (P8)

How will flow rate indication be affected if the equalizing valve for the associated differential pressure detector is fully opened?

A. Increase temporarily, and then return to initial value.

B. Decrease temporarily, and then return to initial value.

C. Increase to the maximum value.

D. Decrease to the minimum value.

ANSWER: D.

TOPIC: 291002
KNOWLEDGE: K1.05 [3.1/3.1]
QID: B608 (P607)

The flow rate of water passing through a venturi can be determined by measuring the...

A. differential pressure of the water as it passes through the venturi.

B. change in the velocity of the water as it passes through the venturi.

C. linear displacement of a metering plug installed in the throat of the venturi.

D. rotation rate of a paddle wheel-type device installed in the throat of the venturi.

ANSWER: A.

TOPIC: 291002
KNOWLEDGE: K1.05 [3.1/3.1]
QID: B708 (P705)

A steam flow measuring instrument uses density compensation and square root compensation to convert the differential pressure across a flow element to flow rate in lbm/hr.

The purpose of square root compensation in this flow measuring instrument is to convert _____ to _____.

A. volumetric flow rate; mass flow rate

B. volumetric flow rate; differential pressure

C. differential pressure; mass flow rate

D. differential pressure; volumetric flow rate

ANSWER: D.

TOPIC: 291002
KNOWLEDGE: K1.05 [3.1/3.1]
QID: B908

Refer to the drawing of a pipe elbow (top view) in an operating water system (see figure below).

At which one of the following locations is the lowest pressure sensed? (Assume a constant pipe diameter and zero head loss in this section of pipe.)

A. Point A

B. Point B

C. Point C

D. Point D

ANSWER: B.

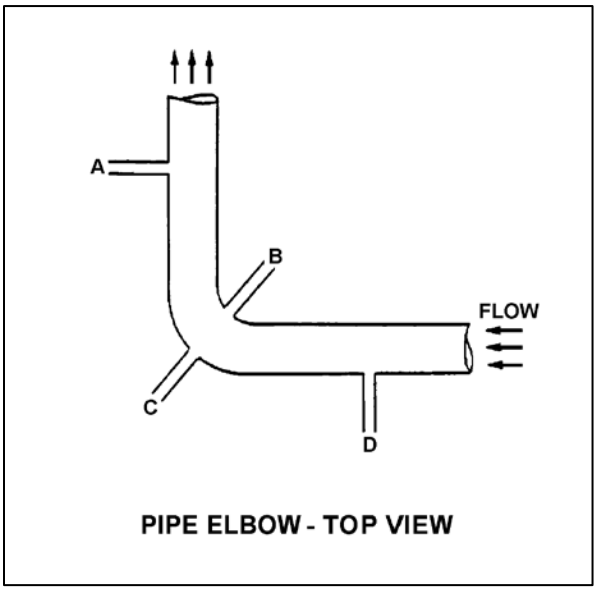

TOPIC: 291002
KNOWLEDGE: K1.05 [3.1/3.1]
QID: B1007 (P2807)

Refer to the drawing of a pipe elbow (top view) in an operating water system (see figure below).

At which one of the following locations is the highest pressure sensed? (Assume a constant pipe diameter and zero head loss in this section of pipe.)

A. Point A

B. Point B

C. Point C

D. Point D

ANSWER: C.

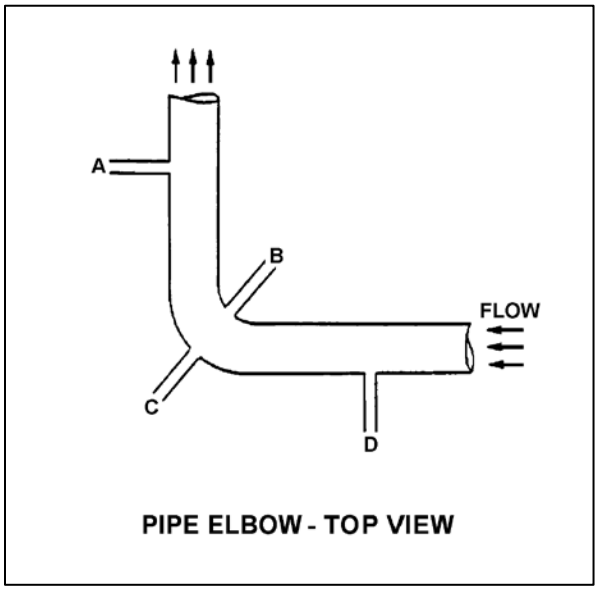

TOPIC: 291002
KNOWLEDGE: K1.05 [3.1/3.1]
QID: B1108

If the flow rate through a differential pressure (D/P) detector flow nozzle doubles, by what factor would the D/P increase?

A. $\sqrt{2}$

B. 2

C. 4

D. 8

ANSWER: C.

TOPIC: 291002
KNOWLEDGE: K1.05 [3.1/3.1]
QID: B1307

Flow rate in a cooling water system, measured using a differential pressure (D/P) detector, indicates 100 gpm at a D/P of 30 psid. If indicated flow rate increases to 150 gpm, what D/P is being sensed by the detector?

A. 36.7 psid

B. 37.5 psid

C. 66.7 psid

D. 67.5 psid

ANSWER: D.

TOPIC: 291002
KNOWLEDGE: K1.05 [3.1/3.1]
QID: B1408 (P1906)

Refer to the drawing of a pipe elbow (top view) in an operating water system (see figure below).

At which one of the following pairs of connection points will the greatest differential pressure be sensed? (Assume a constant pipe diameter and zero head loss in this section of pipe.)

A. Points A and B

B. Points B and C

C. Points C and D

D. Points D and A

ANSWER: B.

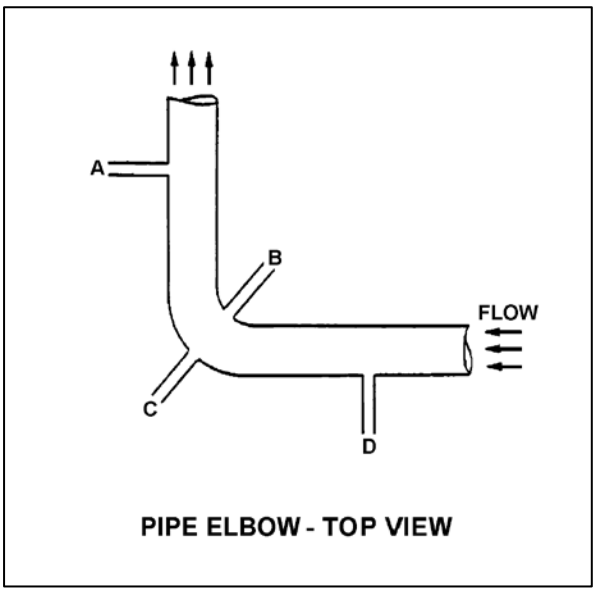

TOPIC: 291002
KNOWLEDGE: K1.05 [3.1/3.1]
QID: B1608 (P1608)

Refer to the drawing of a horizontal pipe elbow (top view) in an operating water system (see figure below).

Three separate differential pressure flow detectors are connected to taps A, B, C, and D as follows:

Detector	Taps
X	A and D
Y	B and D
Z	C and D

Assuming zero head loss in this section of pipe, how will the detectors be affected if tap D ruptures?

A. All detectors will fail low.

B. All detectors will fail high.

C. Two detectors will fail low and one will fail high.

D. Two detectors will fail high and one will fail low.

ANSWER: A.

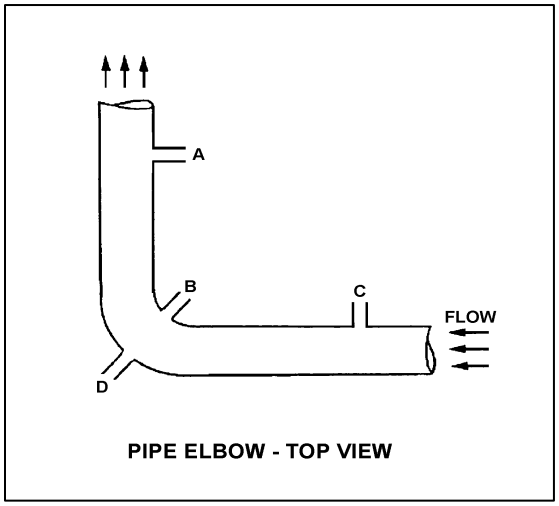

TOPIC: 291002
KNOWLEDGE: K1.05 [3.1/3.1]
QID: B1773 (P1873)

Water is flowing through each of the following devices. Which one of the devices will produce an outlet pressure that is greater than the inlet pressure?

A. Convergent nozzle

B. Divergent nozzle

C. Orifice

D. Flow restrictor

ANSWER: B.

TOPIC: 291002
KNOWLEDGE: K1.05 [3.1/3.1]
QID: B1905 (P907)

A differential pressure (D/P) detector is being used with a venturi to measure main steam flow rate. With a steam flow rate of 5×10^6 lbm/hr, the measured D/P is 40 psid.

If steam flow changes such that the current D/P is 30 psid, what is the approximate current steam flow rate? (Assume that main steam pressure at the inlet of the venturi remains constant.)

A. 2.1×10^6 lbm/hr

B. 3.5×10^6 lbm/hr

C. 3.7×10^6 lbm/hr

D. 4.3×10^6 lbm/hr

ANSWER: D.

TOPIC: 291002
KNOWLEDGE: K1.05 [3.1/3.1]
QID: B1907 (P1007)

Refer to the drawing of a pipe elbow used for flow measurement in a cooling water system (see figure below).

A differential pressure (D/P) flow detector is connected to instrument lines A and B.

If instrument line A develops a leak, indicated flow rate will _____ due to a _____ measured D/P.

A. increase; larger

B. increase; smaller

C. decrease; larger

D. decrease; smaller

ANSWER: D.

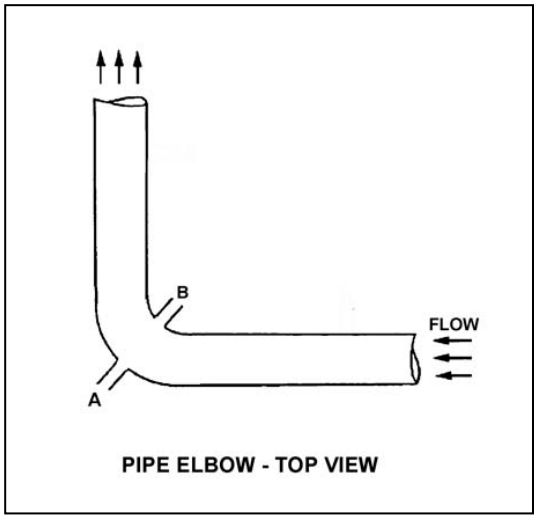

TOPIC: 291002
KNOWLEDGE: K1.05 [3.1/3.1]
QID: B2112

A cooling water system is operating at a steady-state flow rate of 500 gpm with 60 psid across the flow transmitter venturi. If cooling water flow rate is increased to 1000 gpm, differential pressure across the flow transmitter venturi will be approximately...

A. 85 psid.

B. 120 psid.

C. 240 psid.

D. 480 psid.

ANSWER: C.

TOPIC: 291002
KNOWLEDGE: K1.05 [3.1/3.1]
QID: B2209 (P2107)

Refer to the drawing of a pipe elbow used for flow measurement in a cooling water system (see figure below).

A differential pressure (D/P) flow detector is connected to instrument lines A and B.

If instrument line B develops a leak, indicated flow rate will _____ due to a _____ measured D/P.

A. increase; larger

B. increase; smaller

C. decrease; larger

D. decrease; smaller

ANSWER: A.

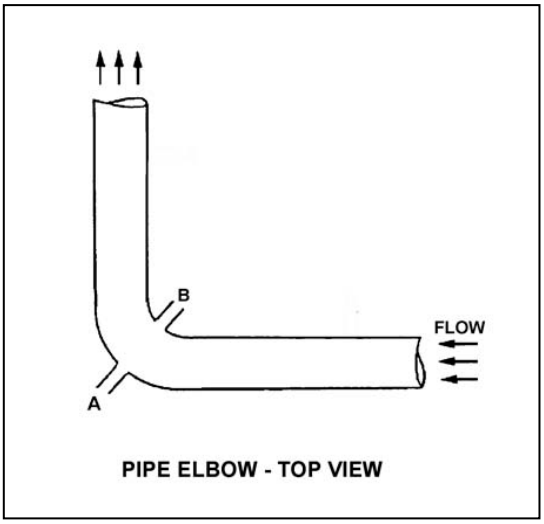

TOPIC: 291002
KNOWLEDGE: K1.05 [3.1/3.1]
QID: B2307 (P2307)

Refer to the drawing of a horizontal pipe elbow (top view) in an operating water system (see figure below). Three separate bellows differential pressure flow detectors are connected to taps A, B, C, and D as follows:

Detector	Taps
X	A and D
Y	B and D
Z	C and D

Assume that water is incompressible and there is no head loss in this section of pipe. How will the detectors be affected if system flow rate remains the same while system pressure increases from 1000 psig to 1200 psig?

A. All detectors will indicate higher flow.

B. Only two detectors will indicate higher flow.

C. Only one detector will indicate higher flow.

D. Detector indication will not change.

ANSWER: D.

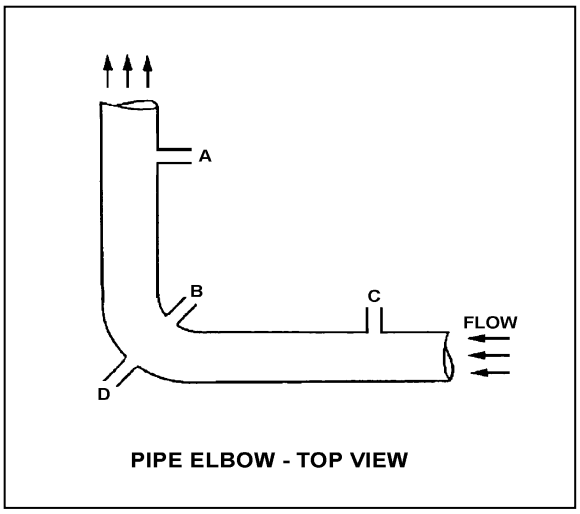

TOPIC: 291002
KNOWLEDGE: K1.05 [3.1/3.1]
QID: B2508 (P2507)

A differential pressure detector is being used with an orifice plate to measure water flow rate through a pipe. When the flow detector was last calibrated, the following parameters were observed:

Upstream Pressure = 125 psig
Downstream Pressure = 116 psig

Actual Flow Rate = 100 gpm
Indicated Flow Rate = 100 gpm

Significant erosion of the orifice has occurred since the calibration such that actual flow rate through the orifice has increased to 120 gpm while the upstream and downstream pressures have changed to 110 psig and 106 psig respectively.

What is the approximate flow rate that is currently indicated?

A. 44 gpm

B. 67 gpm

C. 81 gpm

D. 120 gpm

ANSWER: B.

TOPIC: 291002
KNOWLEDGE: K1.05 [3.1/3.1]
QID: B2607

A cooling water system is operating at a steady-state flow rate of 400 gpm with 60 psid across the flow transmitter venturi. If cooling water flow rate is increased to 600 gpm, differential pressure across the flow transmitter venturi will be approximately...

A. 73 psid.

B. 90 psid.

C. 114 psid.

D. 135 psid.

ANSWER: D.

TOPIC: 291002
KNOWLEDGE: K1.05 [3.1/3.1]
QID: B2807

Refer to the drawing of a pipe elbow used for flow measurement in a cooling water system (see figure below). A differential pressure (D/P) flow detector is properly connected to instrument lines A and C. Connections B and D are capped.

If instrument line A develops a leak, indicated flow rate will _____ due to a _____ measured D/P.

A. increase; larger

B. increase; smaller

C. decrease; larger

D. decrease; smaller

ANSWER: A.

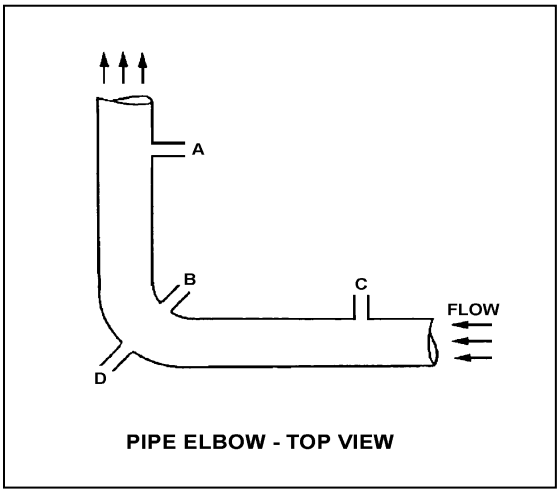

TOPIC: 291002
KNOWLEDGE: K1.05 [3.1/3.1]
QID: B3108 (P2905)

Refer to the drawing of a horizontal pipe elbow (top view) in an operating water system (see figure below).

Three separate bellows-type differential pressure flow detectors are connected to taps A, B, C, and D as follows:

Detector	Taps
X	A and D
Y	B and D
Z	C and D

Assuming zero head loss in this section of pipe, how will the detectors be affected if tap B experiences a significant leak? (Assume water system pressure does not change.)

A. All detectors will fail low.

B. All detectors will fail high.

C. Only one detector will fail, and it will fail low.

D. Only one detector will fail, and it will fail high.

ANSWER: D.

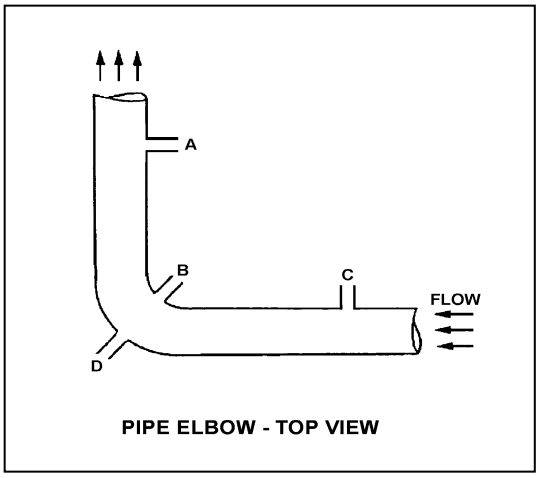

TOPIC: 291002
KNOWLEDGE: K1.05 [3.1/3.1]
QID: B3608 (P3605)

A steam flow measuring instrument uses density compensation and square root extraction to convert the differential pressure across the flow element to flow rate in lbm/hr.

The purpose of density compensation in this flow measuring instrument is to convert _____ to _____.

A. volumetric flow rate; mass flow rate

B. volumetric flow rate; differential pressure

C. differential pressure; mass flow rate

D. differential pressure; volumetric flow rate

ANSWER: A.

TOPIC: 291002
KNOWLEDGE: K1.05 [3.1/3.1]
QID: B3807 (P3807)

Refer to the drawing of a differential pressure manometer (see figure below).

The manometer is filled with water and installed across an orifice in a ventilation duct to determine the rate of air flow. The manometer is currently indicating a water level difference of 16 inches at an air flow rate of 300 ft^3/min.

Which one of the following will be the approximate rate of air flow when the manometer indicates a water level difference of 4 inches?

A. 75 ft^3/min.

B. 125 ft^3/min.

C. 150 ft^3/min.

D. 175 ft^3/min.

ANSWER: C.

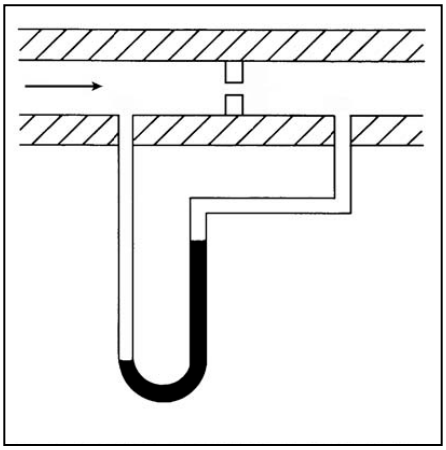

TOPIC: 291002
KNOWLEDGE: K1.05 [3.1/3.1]
QID: B4005 (P4003)

A differential pressure detector is being used with an orifice plate to measure water flow rate through a pipe. When the flow instrument was last calibrated, the following parameters were observed:

Upstream Pressure	= 125 psig	Actual Flow Rate	= 100 gpm
Downstream Pressure	= 116 psig	Indicated Flow Rate	= 100 gpm

Since the calibration, debris has collected in the orifice such that the actual flow rate through the orifice has decreased to 80 gpm while the upstream and downstream pressures have changed to 135 psig and 110 psig, respectively.

What is the approximate flow rate that is currently indicated by the flow instrument?

A. 125 gpm

B. 133 gpm

C. 156 gpm

D. 167 gpm

ANSWER: D.

TOPIC: 291002
KNOWLEDGE: K1.05 [3.1/3.1]
QID: B4605 (P4604)

Refer to the drawing of a differential pressure manometer (see figure below).

The manometer is filled with water and installed across an orifice in a ventilation duct to determine the rate of air flow. The manometer is currently indicating a water level difference of 8 inches at an air flow rate of 300 cubic feet per minute (ft^3/min).

Which one of the following will be the approximate air flow rate when the manometer indicates a water level difference of 4 inches?

A. 75 ft^3/min

B. 150 ft^3/min

C. 188 ft^3/min

D. 212 ft^3/min

ANSWER: D.

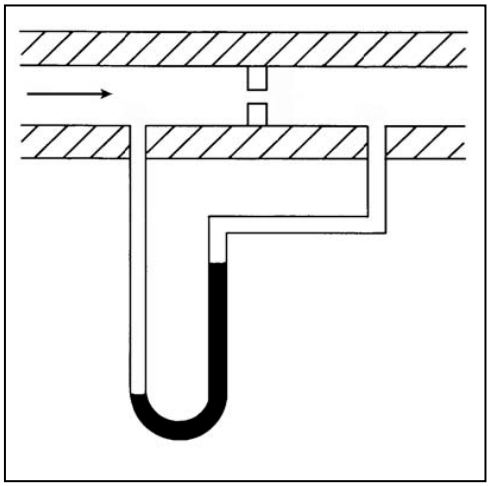

TOPIC: 291002
KNOWLEDGE: K1.06 [2.8/2.9]
QID: B11

Refer to the drawing of a reactor vessel (RV) differential pressure (D/P) level detection system (see figure below).

What is the reason for the reference leg being connected to the RV instead of being connected to a water source independent of the RV?

A. To provide a vent path to prevent collapse of the reference leg during a rapid RV depressurization

B. To remove the need for density compensation of the level signal by keeping the reference leg at the same temperature as the variable leg

C. To make the indicated level proportional to the square root of the D/P pressure between the reference and variable legs for all reactor pressures

D. To provide compensation for the RV pressure exerted on the variable leg

ANSWER: D.

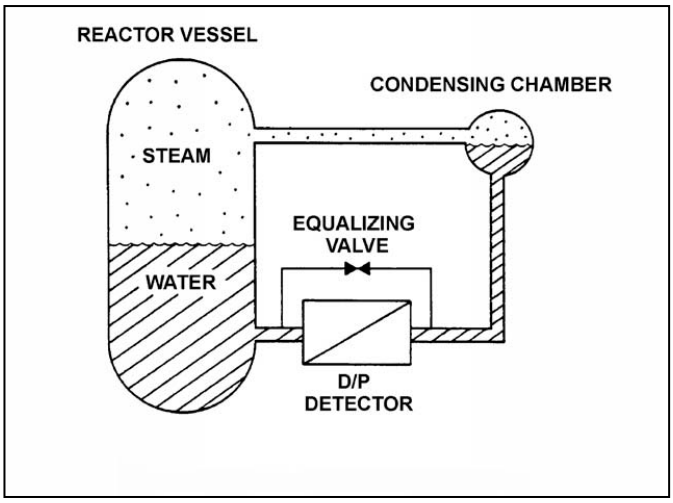

TOPIC: 291002
KNOWLEDGE: K1.06 [2.8/2.9]
QID: B209

Refer to the drawing of a water storage tank with a differential pressure (D/P) level detector (see figure below).

The level detector is being used in a level control system that was calibrated to maintain tank level at 80 percent at the current water temperature of 100°F. If the water temperature gradually decreases and stabilizes at 70°F, the level control system will cause actual tank level to...

A. remain at 80 percent.

B. increase and stabilize above 80 percent.

C. oscillate around 80 percent.

D. decrease and stabilize below 80 percent.

ANSWER: D.

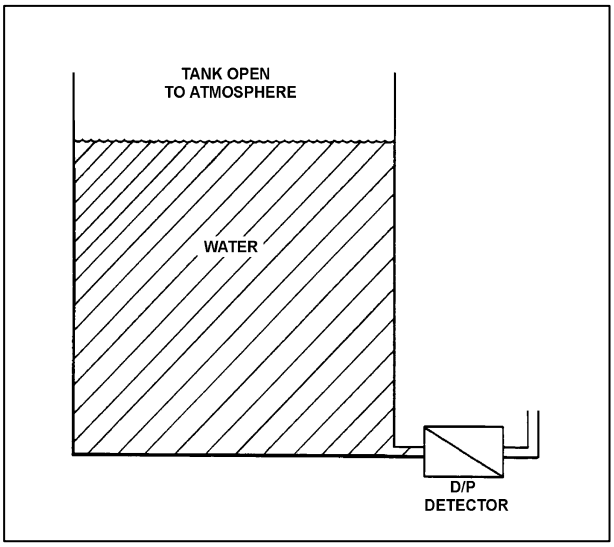

TOPIC: 291002
KNOWLEDGE: K1.06 [2.8/2.9]
QID: B510 (P14)

Refer to the drawing of a water storage tank with two differential pressure (D/P) level indicators (see figure below).

Indicator 1 was calibrated at 200°F and indicator 2 was calibrated at 100°F. If tank water temperature is 150°F, then...

A. indicator 1 will read greater than indicator 2.

B. indicator 2 will read greater than indicator 1.

C. indicators 1 and 2 will read the same.

D. both indicators will be inaccurate, but it is impossible to predict which indicator will read greater.

ANSWER: A.

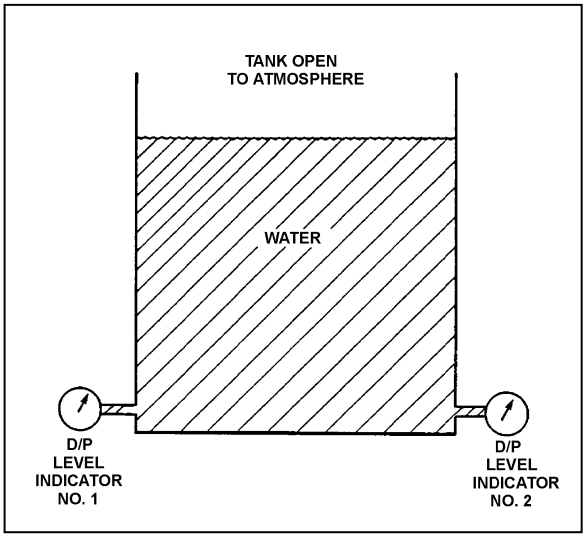

TOPIC: 291002
KNOWLEDGE: K1.06 [2.8/2.9]
QID: B709

Refer to the drawing of a water storage tank with two differential pressure (D/P) level indicators (see figure below).

Indicator 1 was calibrated at 120°F and indicator 2 was calibrated at 180°F. If tank water temperature is 150°F, then indicator...

A. 1 will read greater than indicator 2.

B. 2 will read greater than indicator 1.

C. 1 and 2 readings will increase by the same amount.

D. 1 and 2 readings will decrease by the same amount.

ANSWER: B.

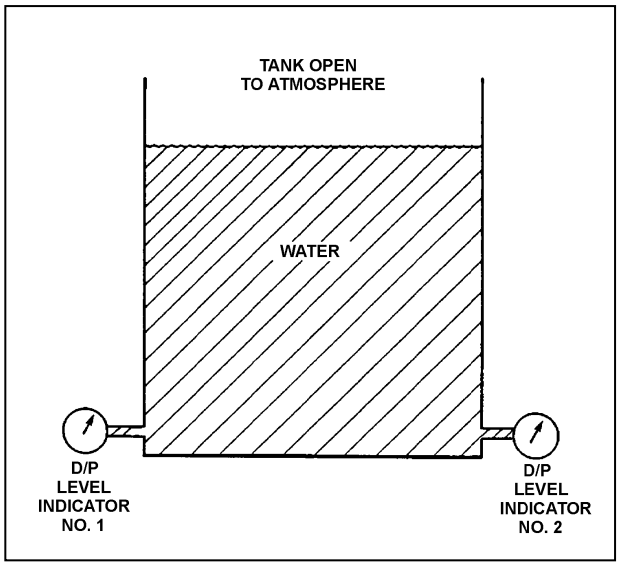

TOPIC: 291002
KNOWLEDGE: K1.06 [2.8/2.9]
QID: B809 (P808)

Refer to the drawing of a water storage tank with a differential pressure (D/P) level detection system (see figure below).

The level detector is being used in a level control system that was calibrated to maintain tank level at 80 percent when the tank temperature was 100°F. If tank temperature gradually increases and stabilizes at 150°F, the level control system will cause actual tank level will...

A. remain stable at 80 percent.

B. increase and stabilize above 80 percent.

C. oscillate and then stabilize at 80 percent.

D. decrease and stabilize below 80 percent.

ANSWER: B.

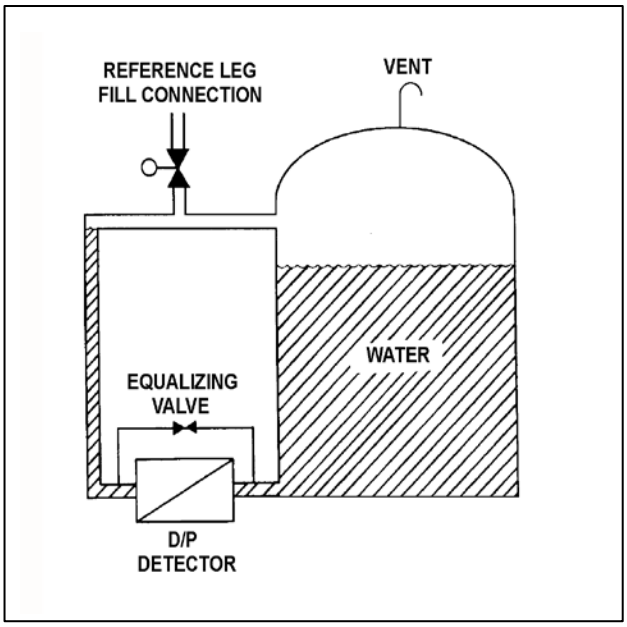

TOPIC: 291002
KNOWLEDGE: K1.06 [2.8/2.9]
QID: B909 (P208)

Refer to the drawing of a water storage tank with a differential pressure (D/P) level detector (see figure below).

The associated level instrument was calibrated with the water storage tank at 100°F. If mass in the tank remains constant and the water temperature increases to 120°F, the indicated level will...

A. remain the same although actual level increases.

B. increase but remain less than actual level.

C. decrease in direct proportion to the temperature rise.

D. increase in direct proportion to the temperature rise.

ANSWER: A.

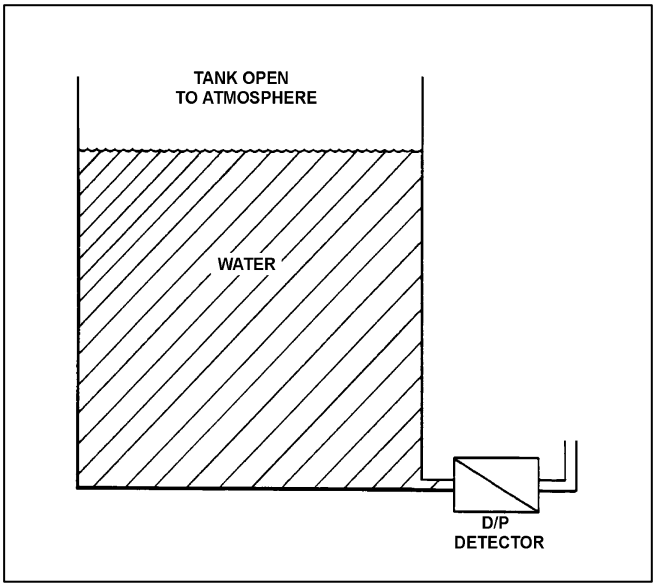

TOPIC: 291002
KNOWLEDGE: K1.06 [2.8/2.9]
QID: B1209

Two differential pressure level transmitters are installed on a large water storage tank. Transmitter I was calibrated at 100°F and transmitter II was calibrated at 200°F water temperature.

Which transmitter will indicate a higher level?

A. Transmitter I below 150°F, transmitter II above 150°F.

B. Transmitter II below 150°F, transmitter I above 150°F.

C. Transmitter I at all water temperatures.

D. Transmitter II at all water temperatures.

ANSWER: D.

TOPIC: 291002
KNOWLEDGE: K1.06 [2.8/2.9]
QID: B1409 (P1607)

Refer to the drawing of a water storage tank with a differential pressure (D/P) level detector (see figure below).

The associated level instrument was calibrated with the water storage tank at 120°F. If the mass in the tank remains constant and the water temperature decreases to 100°F, the indicated level will...

A. remain the same although actual level decreases.

B. remain the same although actual level increases.

C. increase in direct proportion to the temperature decrease.

D. decrease in direct proportion to the temperature decrease.

ANSWER: A.

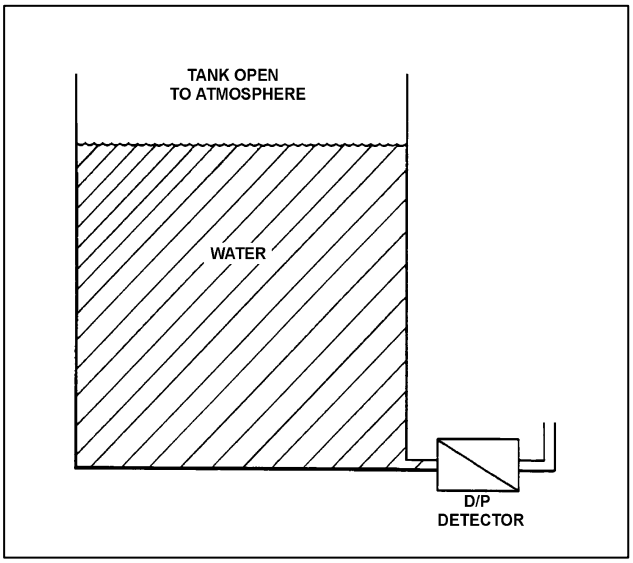

TOPIC: 291002
KNOWLEDGE: K1.06 [2.8/2.9]
QID: B1706 (P1706)

Refer to the drawing of a water storage tank with two differential pressure (D/P) level indicators (see figure below).

Two D/P level indicators are installed on a large water storage tank. Indicator No. 1 was calibrated at 200°F water temperature and indicator No. 2 was calibrated at 100°F water temperature.

Assuming both indicators are on scale, which indicator will indicate the lower level?

A. Indicator 1 at all water temperatures.

B. Indicator 2 at all water temperatures.

C. Indicator 1 below 150°F, indicator 2 above 150°F.

D. Indicator 2 below 150°F, indicator 1 above 150°F.

ANSWER: B.

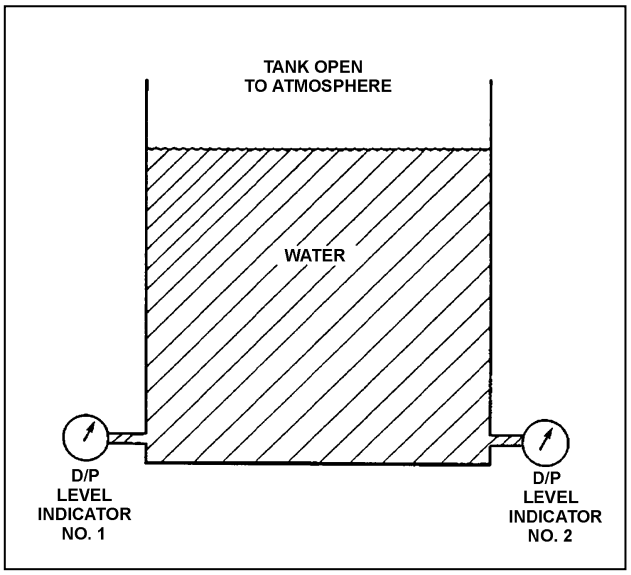

TOPIC: 291002
KNOWLEDGE: K1.06 [2.8/2.9]
QID: B1809

Refer to the drawing of a water storage tank with a differential pressure (D/P) level detector that was recently calibrated at a tank water temperature of 80°F (see figure below).

If the mass of the water in the tank remains the same while the tank water temperature is raised from 80°F to 150°F, the indicated level will...

A. remain equal to actual level.

B. increase, due to the expansion of the water.

C. remain the same.

D. decrease, due to the expansion of the water.

ANSWER: C.

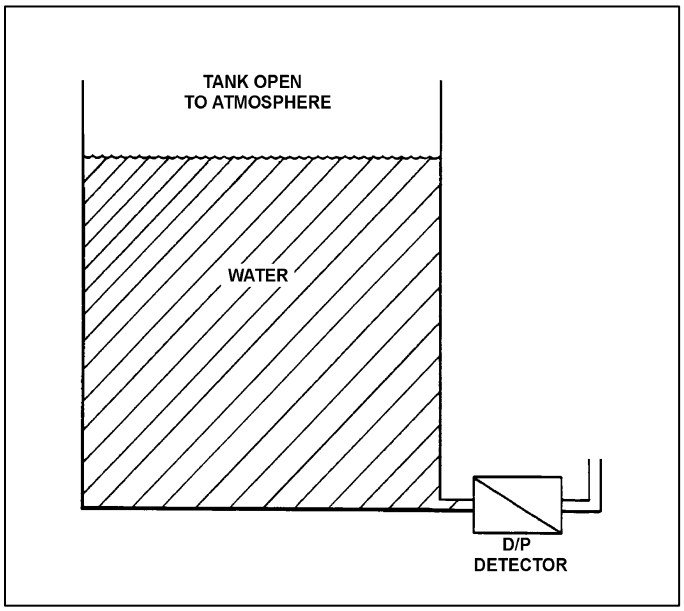

TOPIC: 291002
KNOWLEDGE: K1.06 [2.8/2.9]
QID: B2210

Refer to the drawing of a water storage tank with a differential pressure (D/P) level detector (see figure below).

The level detector is being used in a level control system that was calibrated to maintain tank level at 80 percent at the current water temperature of 70°F. If the water temperature gradually increases and stabilizes at 90°F, the level control system will cause actual tank level to...

A. remain at 80 percent.

B. increase and stabilize above 80 percent.

C. oscillate around 80 percent.

D. decrease and stabilize below 80 percent.

ANSWER: B.

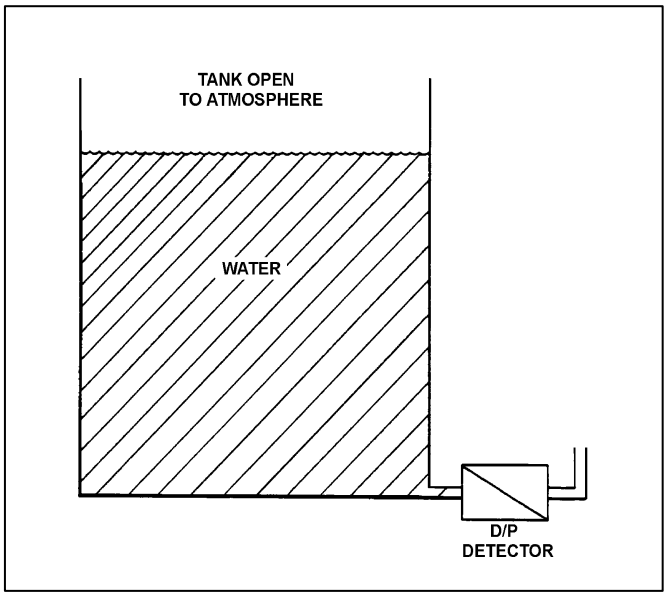

TOPIC: 291002
KNOWLEDGE: K1.06 [2.8/2.9]
QID: B2408 (P2108)

Refer to the drawing of a water storage tank with two differential pressure (D/P) level indicators (see figure below).

Indicator 1 was calibrated at 180°F and indicator 2 was calibrated at 120°F. If tank water temperature is 150°F, then indicator...

A. 1 will read greater than indicator 2, and greater than actual water level.

B. 1 will read greater than indicator 2, and less than actual water level.

C. 2 will read greater than indicator 1, and greater than actual water level.

D. 2 will read greater than indicator 1, and less than actual water level.

ANSWER: A.

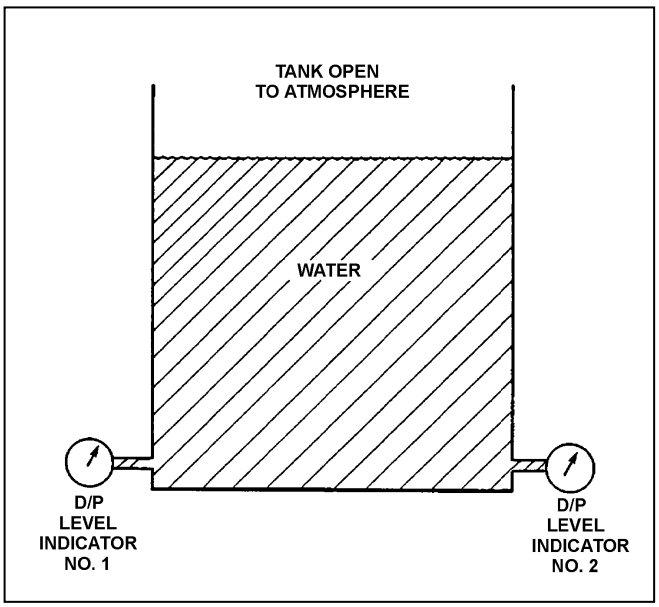

TOPIC: 291002
KNOWLEDGE: K1.06 [2.8/2.9]
QID: B2409

Refer to the drawing of a reactor vessel differential pressure (D/P) level detection system that was calibrated at 1,000 psia (see figure below).

A reactor vessel cooldown has resulted in a decrease in reactor vessel pressure from 1,000 psia to 500 psia over several hours. Without density compensation of the level instrumentation, at the end of the cooldown, reactor vessel level indication would indicate _____ than actual level because the density of the water in the _____ has changed significantly. (Assume the reference leg does not flash to steam.)

A. higher; reactor vessel

B. higher; reference leg

C. lower; reactor vessel

D. lower; reference leg

ANSWER: A.

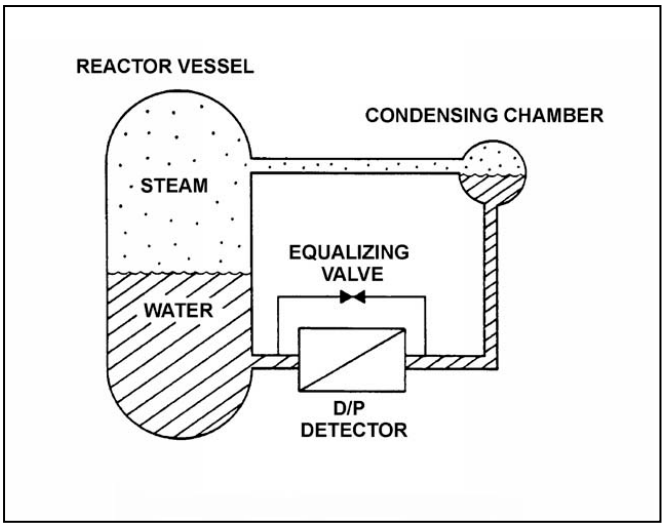

TOPIC: 291002
KNOWLEDGE: K1.06 [2.8/2.9]
QID: B2509

Refer to the drawing of a reactor vessel differential pressure (D/P) level detection system that was calibrated at 500 psia (see figure below).

A reactor vessel heatup has resulted in an increase in reactor vessel pressure from 500 psia to 1,000 psia over several hours. Without density compensation of the level instrumentation, at the end of the heatup, reactor vessel level indication would indicate _____ than actual level because the density of the water in the _____ has changed significantly.

A. higher; reactor vessel

B. higher; reference leg

C. lower; reactor vessel

D. lower; reference leg

ANSWER: C.

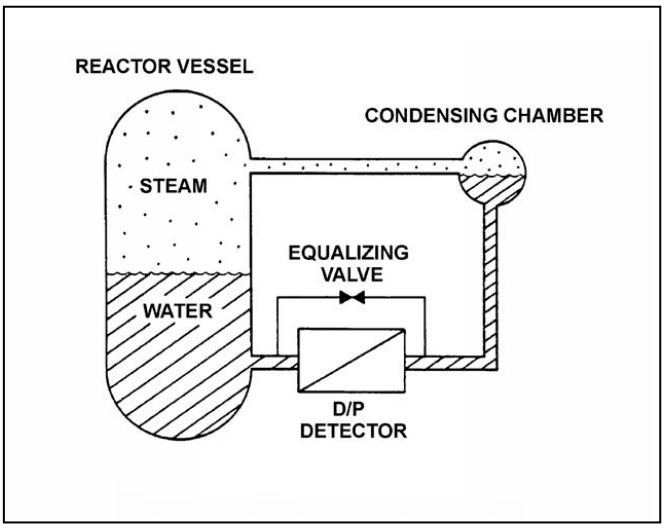

TOPIC: 291002
KNOWLEDGE: K1.06 [2.8/2.9]
QID: B3210

A reactor is currently shut down at 180°F. Reactor vessel (RV) level is being monitored using a normal at-power RV level instrument that was calibrated at normal plant operating conditions.

The RV level instrument indicates _____ than actual RV level because, compared to the calibration conditions, there has been a significant change in the density of the fluid in the _____.

A. less; reference leg

B. less; reactor vessel

C. greater; reference leg

D. greater; reactor vessel

ANSWER: D.

TOPIC: 291002
KNOWLEDGE: K1.06 [2.8/2.9]
QID: B3508 (P911)

Refer to the drawing of a reactor vessel (RV) differential pressure (D/P) level detection system (see figure below) that was recently calibrated at normal operating conditions.

With the reactor shut down, RV pressure was inadvertently decreased from 1,000 psig to 500 psig in 5 minutes due to operator error. RV pressure was stabilized at 500 psig, but during the pressure decrease a small amount of water in the condensing chamber flashed to steam. Assume the reference leg water remained subcooled, except for the small amount of water that flashed to steam in the condensing chamber.

As a result of the small loss of condensing chamber water, RV level will indicate _____ than actual level; and as the condensing chamber refills, indicated level will _____.

A. higher; decrease and stabilize above the actual level

B. higher; decrease and stabilize below the actual level

C. lower; increase and stabilize above the actual level

D. lower; increase and stabilize below the actual level

ANSWER: A.

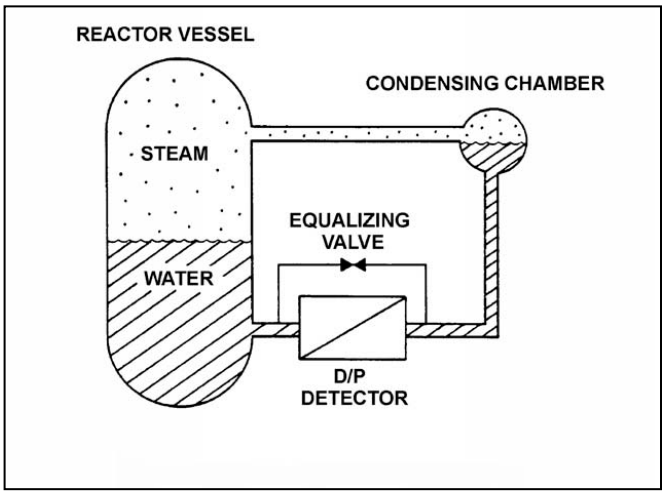

TOPIC: 291002
KNOWLEDGE: K1.06 [2.8/2.9]
QID: B4104

Refer to the drawing of a reactor vessel differential pressure (D/P) level detection system that was recently calibrated at normal operating conditions (see figure below). Assume that the associated reactor vessel level instrument does not use density compensation.

With the nuclear power plant shut down at reduced reactor vessel temperature and pressure, the reactor vessel level instrument will indicate _____ than actual water level; the D/P currently sensed by the D/P detector is _____ than the D/P for the same reactor vessel water level at normal operating conditions.

A. higher; smaller

B. higher; larger

C. lower; smaller

D. lower; larger

ANSWER: A.

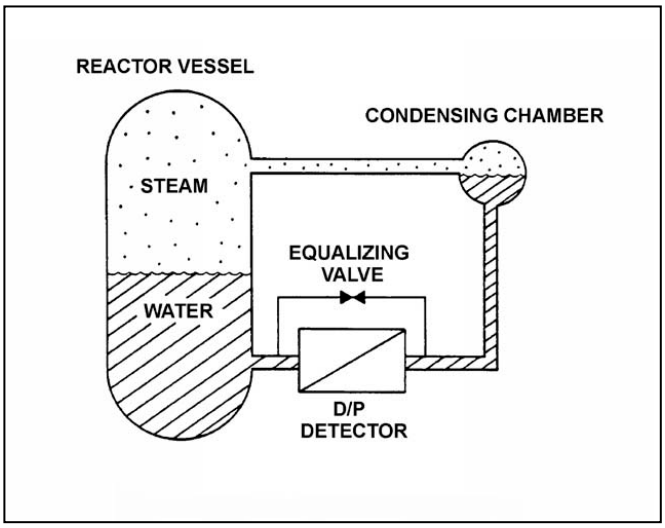

TOPIC: 291002
KNOWLEDGE: K1.06 [2.8/2.9]
QID: B4205 (P1907)

Refer to the drawing of a water storage tank with two differential pressure (D/P) level indicators (see figure below).

Indicator 1 was calibrated at 120°F and indicator 2 was calibrated at 180°F. If tank water temperature is currently 150°F, then indicator...

A. 1 will read greater than indicator 2, and greater than actual level.

B. 1 will read greater than indicator 2, and less than actual level.

C. 2 will read greater than indicator 1, and greater than actual level.

D. 2 will read greater than indicator 1, and less than actual level.

ANSWER: C.

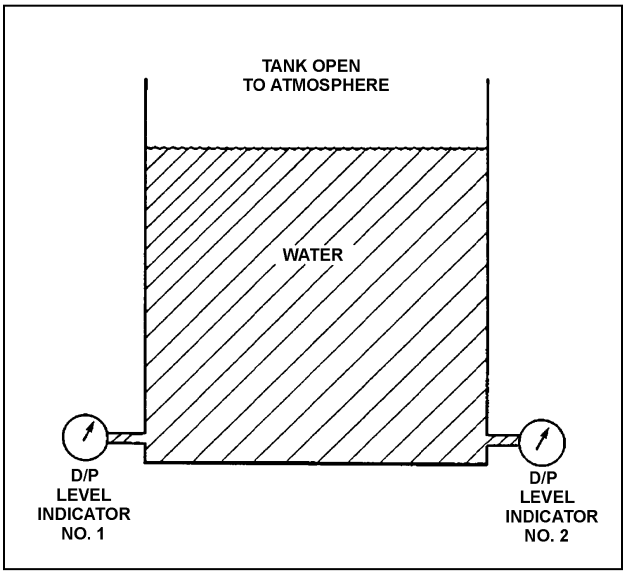

TOPIC: 291002
KNOWLEDGE: K1.06 [2.8/2.9]
QID: B4504

Refer to the drawing of a differential pressure (D/P) level detection system for a reactor vessel at normal operating temperature and pressure (see figure below).

A nuclear power plant uses several differential pressure detectors like the one below to provide multiple channels of reactor vessel water level indication. A hot channel was calibrated when the reactor vessel was at normal operating temperature. A cold channel was calibrated when the reactor vessel was at 160°F.

How will the level indications on the two channels compare when the reactor vessel is at normal operating temperature?

A. The cold channel will indicate higher than the hot channel, due to the difference in reference leg water density at the two calibration temperatures.

B. The cold channel will indicate lower than the hot channel, due to the difference in reference leg water density at the two calibration temperatures.

C. The cold channel will indicate higher than the hot channel, due to the difference in reactor vessel water density at the two calibration temperatures.

D. The cold channel will indicate lower than the hot channel, due to the difference in reactor vessel water density at the two calibration temperatures.

ANSWER: D.

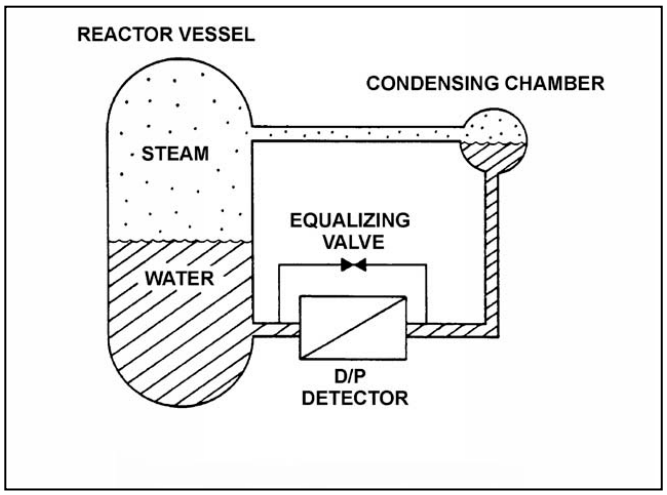

TOPIC: 291002
KNOWLEDGE: K1.06 [2.8/2.9]
QID: B5105

Refer to the drawing of a differential pressure (D/P) level detection system for a reactor vessel at normal operating temperature and pressure (see figure below).

A nuclear power plant uses several differential pressure detectors like the one below to provide multiple channels of reactor vessel water level indication. A hot channel was calibrated when the reactor vessel was at normal operating temperature. A cold channel was calibrated when the reactor vessel was at 160°F.

How will the level indications on the two channels compare when the reactor vessel is at 160°F?

A. The cold channel will indicate higher than the hot channel, due to the difference in reference leg water density at the two calibration temperatures.

B. The cold channel will indicate lower than the hot channel, due to the difference in reference leg water density at the two calibration temperatures.

C. The cold channel will indicate higher than the hot channel, due to the difference in reactor vessel water density at the two calibration temperatures.

D. The cold channel will indicate lower than the hot channel, due to the difference in reactor vessel water density at the two calibration temperatures.

ANSWER: D.

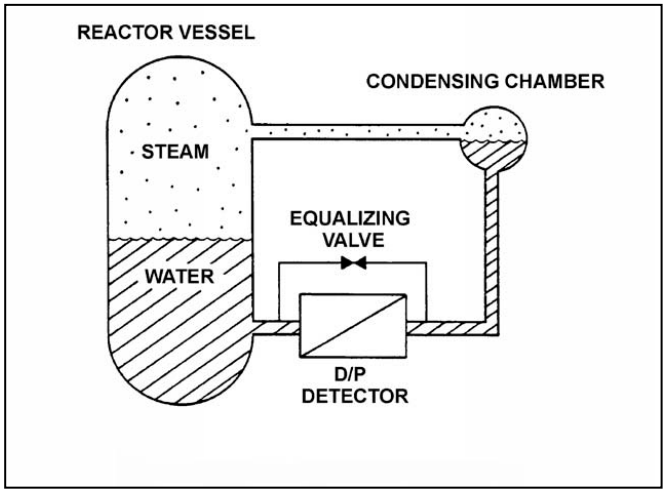

TOPIC: 291002
KNOWLEDGE: K1.06 [2.8/2.9]
QID: B6204

Refer to the drawing of a reactor vessel differential pressure (D/P) level detection system (see figure below).

With the reactor containing saturated water at 536°F, reactor vessel level indication is 40 feet. Assume that reference leg level and temperature do not change. Also, ignore the effect of steam density changes on level indication.

With no change in actual reactor vessel level, what will level indication be at 300°F (saturated)?

A. 32.7 feet

B. 35.8 feet

C. 45.2 feet

D. 48.9 feet

ANSWER: D.

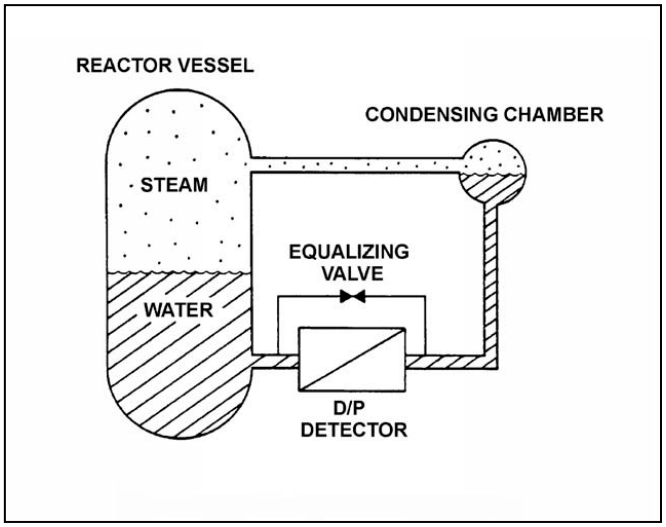

TOPIC: 291002
KNOWLEDGE: K1.07 [3.2/3.2]
QID: B155

Many reactor vessel water level instruments are designed with a condensing chamber in the reference leg. The purpose of the condensing chamber is to...

A. provide a steady source of makeup water to the reference leg during normal operations.

B. provide reference leg compensation for the reactor pressure exerted on the variable leg.

C. prevent reference leg flashing during a rapid depressurization of the reactor vessel.

D. ensure the reference leg temperature remains near the temperature of the water in the reactor vessel.

ANSWER: A.

TOPIC: 291002
KNOWLEDGE: K1.07 [3.2/3.2]
QID: B910 (P910)

Refer to the drawing of a water storage tank with a differential pressure (D/P) level detection system (see figure below).

The D/P sensed by the detector varies in the _____ direction as the temperature of the water in the tank if the _____ of the tank water is constant. (Assume reference leg and tank water temperatures are initially the same.)

A. same; level

B. inverse; level

C. same; mass

D. inverse; mass

ANSWER: A.

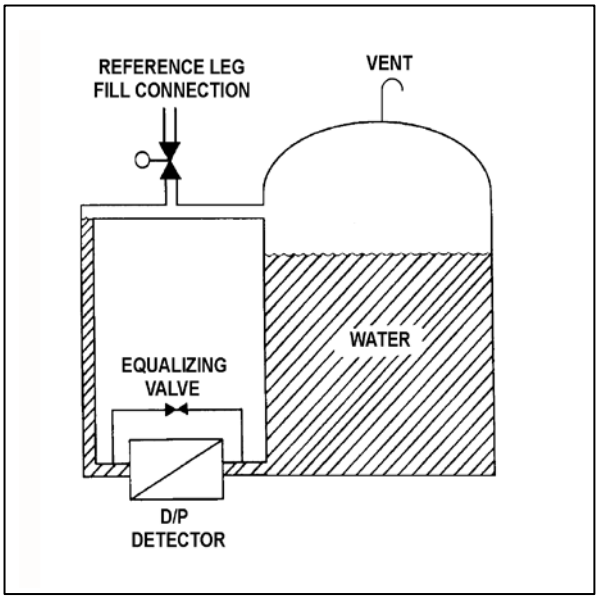

TOPIC: 291002
KNOWLEDGE: K1.07 [3.2/3.2]
QID: B1211 (P1807)

A cooling water system is cooling a lube oil heat exchanger. Cooling water system surge tank level is being measured using a differential pressure level detector that has been calibrated at the current water temperature in the tank. A leak in the heat exchanger results in lube oil collecting in the surge tank.

Assuming that the temperature of the contents in the surge tank does not change, indicated tank level will be _____ than actual tank level because lube oil is _____ than water.

A. higher; more dense

B. higher; less dense

C. lower; more dense

D. lower; less dense

ANSWER: D.

TOPIC: 291002
KNOWLEDGE: K1.07 [3.2/3.2]
QID: B1507 (P1107)

Refer to the drawing of a water storage tank with two tank differential pressure (D/P) level indicators (see figure below).

Two D/P level indicators are installed on a large water storage tank. Indicator 1 was calibrated at 100°F water temperature and indicator 2 was calibrated at 200°F water temperature.

Assuming both indicators are on scale, which indicator will indicate the lower level?

A. Indicator 1 at all water temperatures

B. Indicator 2 at all water temperatures

C. Indicator 1 below 150°F, indicator 2 above 150°F

D. Indicator 2 below 150°F, indicator 1 above 150°F

ANSWER: A.

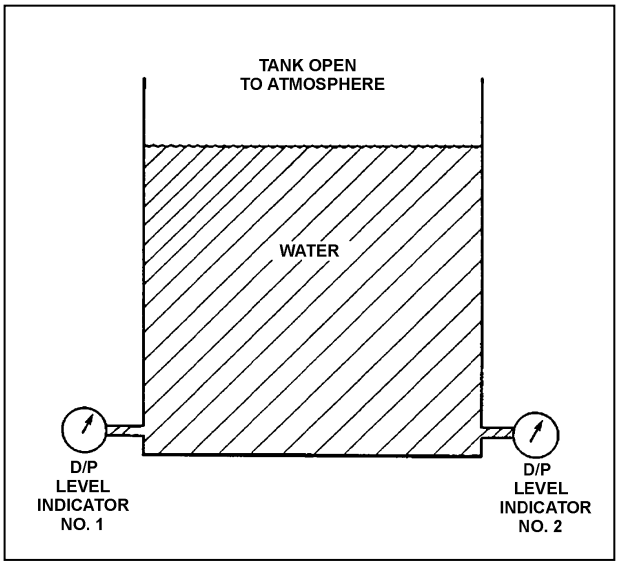

TOPIC: 291002
KNOWLEDGE: K1.07 [3.2/3.2]
QID: B3010 (P3008)

Refer to the drawing of a water storage tank with a differential pressure (D/P) level detection system (see figure below).

Assume the initial temperature of the reference leg and the water in the tank is 100°F, and that reference leg temperature does not change.

If the temperature of the water in the tank increases by 20°F, the D/P sensed by the detector will _____ as long as the water _____ is maintained constant.

A. increase; level

B. decrease; level

C. increase; mass

D. decrease; mass

ANSWER: A.

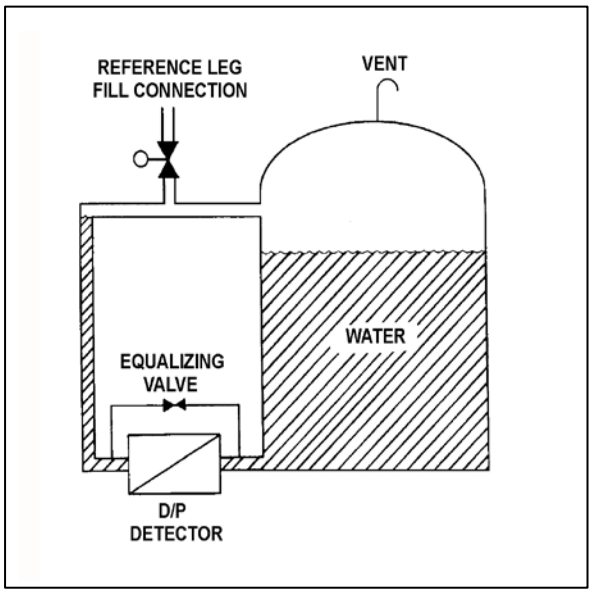

TOPIC: 291002
KNOWLEDGE: K1.07 [3.2/3.2]
QID: B5004

The downcomer region of a reactor vessel contains 40 feet of saturated water at 536°F. A reactor vessel water level detector has a pressure tap located at the bottom of the downcomer region. Approximately how much of the total pressure at the pressure tap is caused by the downcomer water?

A. 0.6 psi

B. 13.0 psi

C. 27.7 psi

D. 156.0 psi

ANSWER: B.

TOPIC: 291002
KNOWLEDGE: K1.07 [3.2/3.2]
QID: B5204

Refer to the drawing of a differential pressure (D/P) level detection system (see figure below) for a reactor vessel at normal operating temperature and pressure. The level detector has just been calibrated.

The high pressure side of the detector is connected to the _____; and if the equalizing valve is opened, the indicated reactor vessel level will be _____ than the actual level.

A. condensing chamber; lower

B. condensing chamber; higher

C. reactor vessel; lower

D. reactor vessel; higher

ANSWER: B.

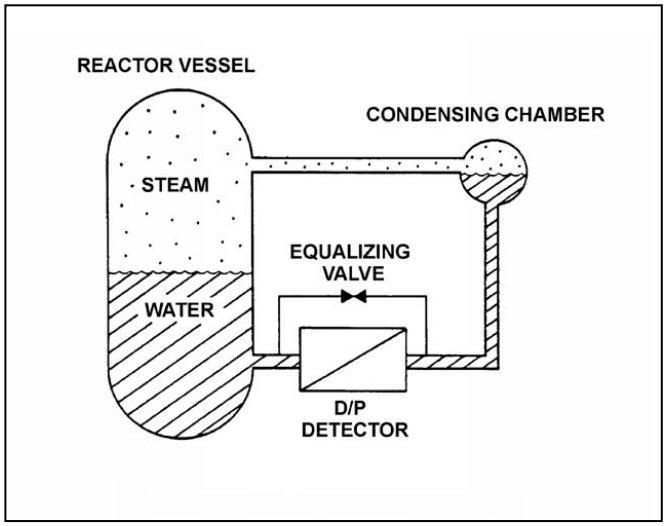

TOPIC: 291002
KNOWLEDGE: K1.07 [3.2/3.2]
QID: B6105 (P6104)

Refer to the drawing of a water storage tank with a differential pressure (D/P) level detection system (see figure below).

The D/P level detector was just calibrated and returned to operation with the following conditions:

- The reference leg contains 20 feet of water at 70°F.
- The tank contains 18 feet of water at 70°F.
- Tank level indication is 18 feet.

Assume the actual tank water level and the temperature of the water in the tank and reference leg do not change. Which one of the following will be the new tank level indication if the reference leg water level decreases to 18 feet?

A. 22 feet

B. 20 feet

C. 18 feet

D. 2 feet

ANSWER: B.

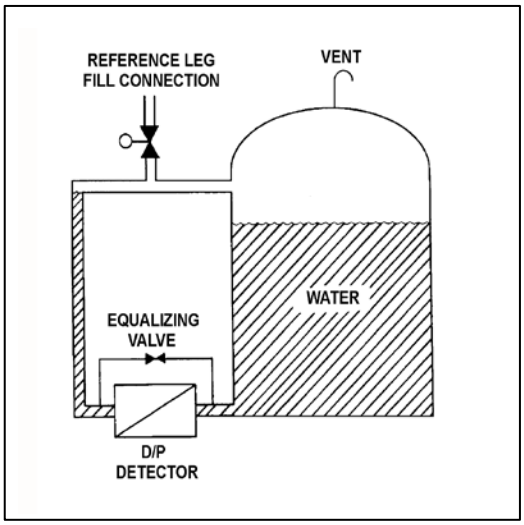

TOPIC: 291002
KNOWLEDGE: K1.07 [3.2/3.2]
QID: B6606 (P6604)

Refer to the drawing of a water storage tank with a differential pressure (D/P) level detection system (see figure below).

The water storage tank is 40 feet tall. The level detection system is calibrated to provide a level indication of 30 feet when the tank and reference leg levels are equal.

If the tank is completely filled with water, the tank level will indicate...

A. less than 30 feet.

B. 30 feet.

C. greater than 30 feet, but less than 40 feet.

D. 40 feet.

ANSWER: B.

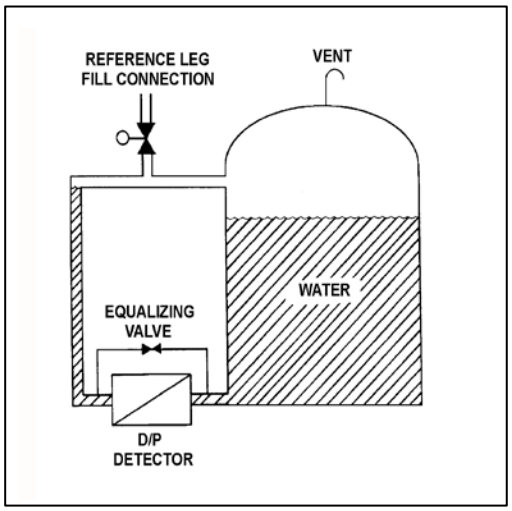

TOPIC: 291002
KNOWLEDGE: K1.07 [3.2/3.2]
QID: B6705 (P6704)

Refer to the drawing of a water storage tank with a differential pressure (D/P) level detection system (see figure below).

Assume that the initial temperature of the reference leg and the water in the tank is 100°F, and that reference leg temperature does not change.

If the temperature of the water in the tank increases by 20°F, the D/P sensed by the detector will _____ if the _____ of the water in the tank is constant.

A. decrease; level

B. decrease; mass

C. remain the same; level

D. remain the same; mass

ANSWER: D.

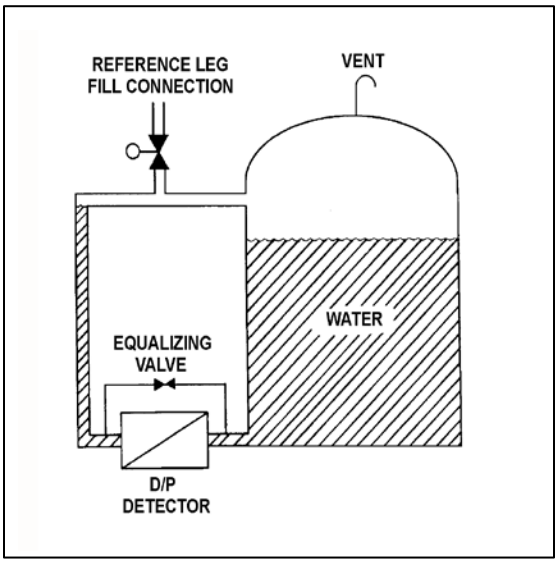

TOPIC: 291002
KNOWLEDGE: K1.07 [3.2/3.2]
QID: B7404 (P7404)

Refer to the drawing of a vented water storage tank with a differential pressure (D/P) level detection system (see figure below). The water in the tank and reference leg is at the same temperature.

The tank level indicator was just calibrated to indicate 0 percent when the tank is empty and 100 percent when the water level reaches the upper tap. The indicator's display range is 0 percent to 120 percent. The initial water level is as indicated in the figure.

If the tank water level slowly increases and stabilizes just below the top of the tank, the level indication will increase until…

A. the water level stabilizes, at which time the level indication will stabilize at 100 percent.

B. the water level stabilizes, at which time the level indication will stabilize at a value greater than 100 percent.

C. the water level reaches the upper tap, at which time the level indication will remain at 100 percent as the water level continues to increase.

D. the water level reaches the upper tap, at which time the level indication will continue to increase as the water level continues to increase.

ANSWER: C.

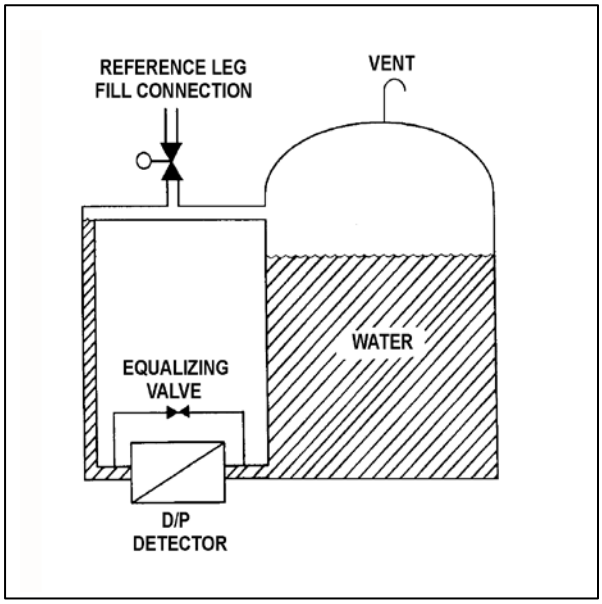

TOPIC: 291002
KNOWLEDGE: K1.08 [2.8/2.9]
QID: B12 (P609)

Refer to the drawing of two water storage tanks with four differential pressure (D/P) level detectors (see figure below).

The tanks are identical with equal water levels and both are pressurized to 20 psig. All detectors were calibrated at the current water temperature and 70°F external (ambient) temperature.

Which detectors will provide the most accurate level indication following an increase in external (ambient) temperature from 70°F to 100°F? (Assume tank contents temperatures and external pressure do not change.)

A. 1 and 3

B. 2 and 4

C. 1 and 4

D. 2 and 3

ANSWER: B.

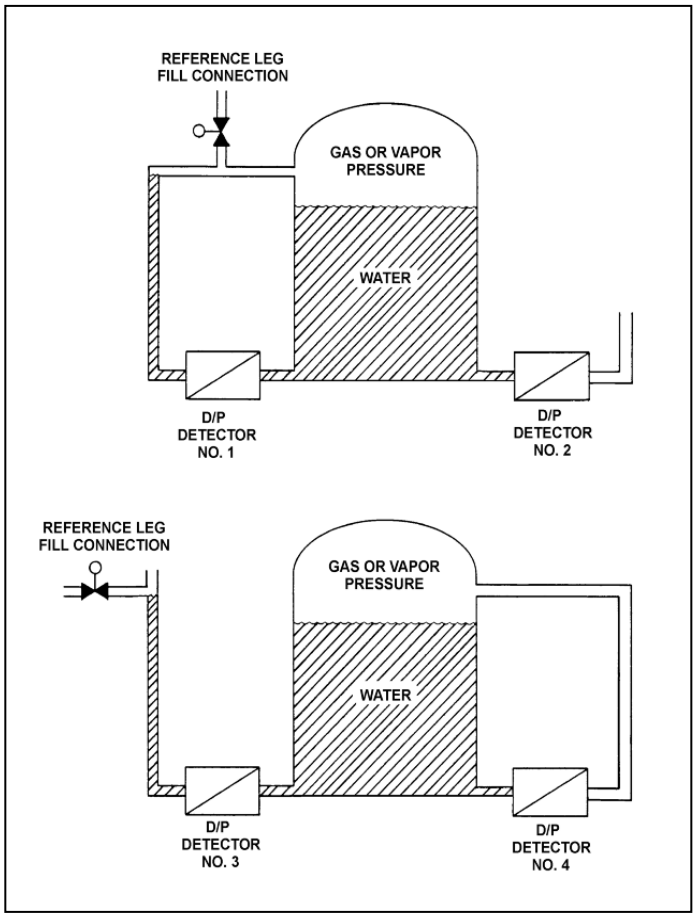

TOPIC: 291002
KNOWLEDGE: K1.08 [2.8/2.9]
QID: B308 (P309)

Refer to the drawing of a water storage tank with a differential pressure (D/P) level detection system (see figure below).

Tank water level indication will be lower than actual level when reference leg temperature is _____ than calibration conditions or when there is a break in the _____ leg of the D/P cell.

A. less; reference

B. less; variable

C. greater; reference

D. greater; variable

ANSWER: B.

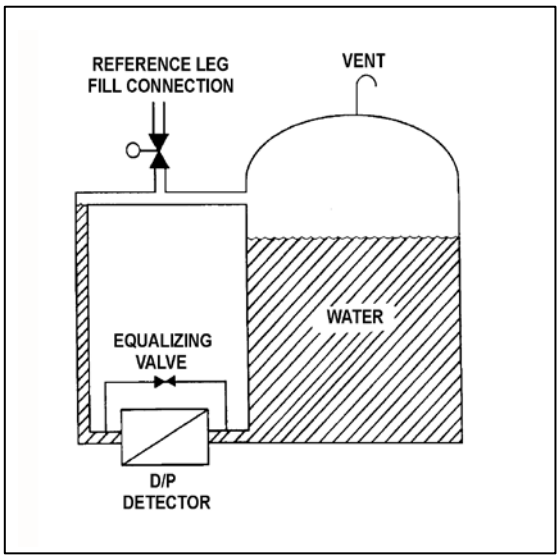

TOPIC: 291002
KNOWLEDGE: K1.08 [2.8/2.9]
QID: B710 (P709)

Refer to the drawing of two water storage tanks with four differential pressure (D/P) level detectors (see figure below).

The tanks are identical and are being maintained at 17 psia and 70 percent water level (calibration conditions). They are located in a building that is currently at atmospheric pressure.

If the building ventilation system creates a vacuum in the building, which level detectors will provide the lowest level indications?

A. 1 and 3

B. 1 and 4

C. 2 and 3

D. 2 and 4

ANSWER: B.

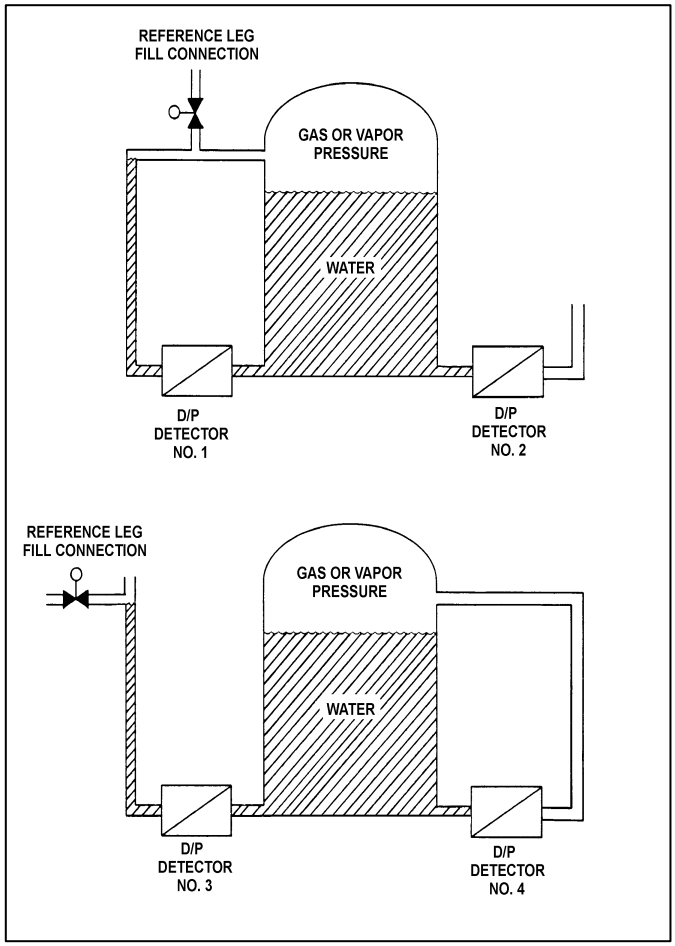

TOPIC: 291002
KNOWLEDGE: K1.08 [2.8/2.9]
QID: B1609 (P1108)

Refer to the drawing of a water storage tank with a differential pressure (D/P) level detection system (see figure below).

A calibrated D/P level detector is being used to measure level in a vented tank inside the auxiliary building. If building pressure increases with no change in temperature, the associated level indication will...

A. decrease, then increase and stabilize at the actual level.

B. decrease and stabilize below the actual level.

C. increase and stabilize above the actual level.

D. remain at the actual level.

ANSWER: D.

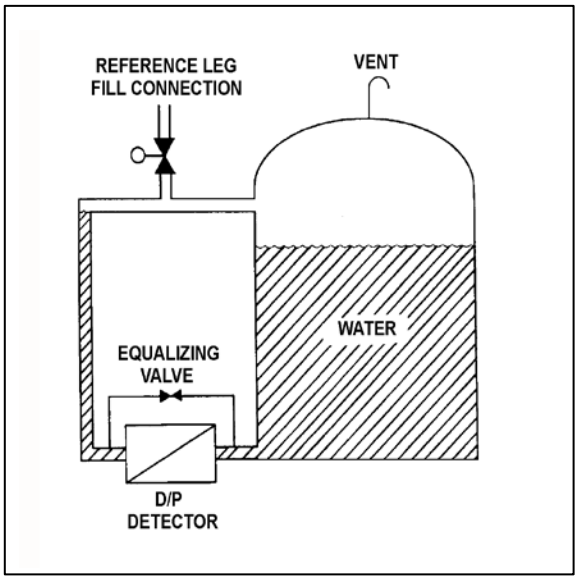

TOPIC: 291002
KNOWLEDGE: K1.08 [2.8/2.9]
QID: B1909 (P1008)

Refer to the drawing of a water storage tank with a differential pressure (D/P) level detector (see figure below).

The level detector is being used in a level control system that is calibrated to maintain tank level at 75 percent at the current water temperature of 120°F. If water temperature gradually decreases and stabilizes at 90°F, actual tank level will...

A. remain at 75 percent.

B. increase and stabilize above 75 percent.

C. oscillate around 75 percent.

D. decrease and stabilize below 75 percent.

ANSWER: D.

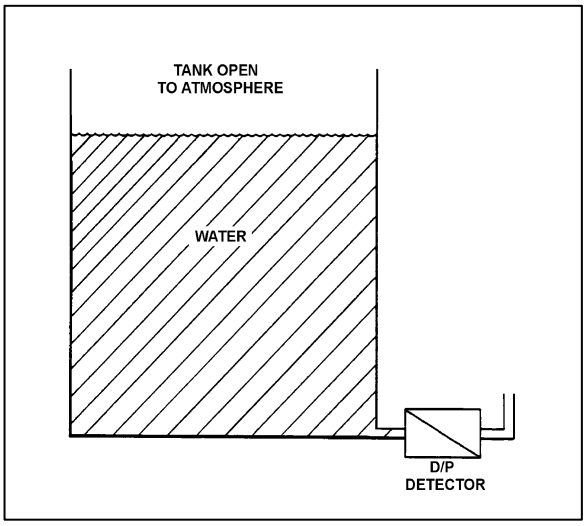

TOPIC: 291002
KNOWLEDGE: K1.08 [2.8/2.9]
QID: B2609 (P708)

Refer to the drawing of a water storage tank with a differential pressure (D/P) level detector (see figure below).

The level detector is being used in a level control system that is calibrated to maintain tank level at 75 percent at the current water temperature of 90°F. If water temperature gradually increases and stabilizes at 120°F, the level control system will cause actual tank level to...

A. remain at 75 percent.

B. increase and stabilize above 75 percent.

C. oscillate around 75 percent.

D. decrease and stabilize below 75 percent.

ANSWER: B.

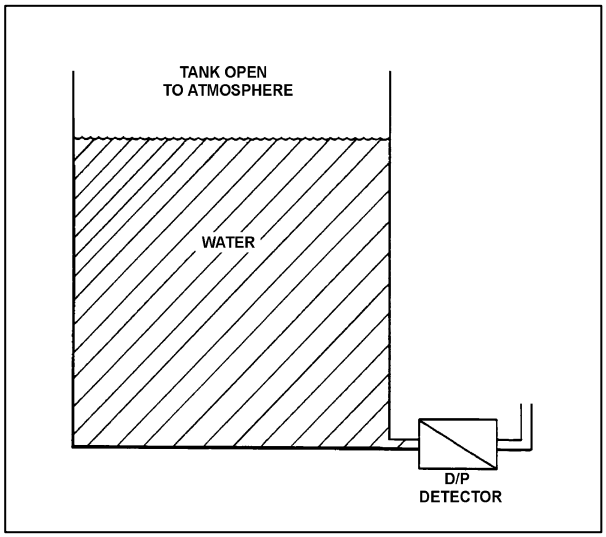

TOPIC: 291002
KNOWLEDGE: K1.08 [2.8/2.9]
QID: B2808 (P2810)

Refer to the drawing of a reactor vessel level detection system (see figure below). The differential pressure (D/P) detector was calibrated while the plant was at normal operating conditions.

With the plant initially at normal operating conditions, a reactor vessel head leak occurred. Reactor vessel pressure decreased by 300 psia, and the ambient air temperature surrounding the reference leg increased by 80°F, where these parameters stabilized.

If the actual reactor vessel water level is 6 feet above the fuel, the reduced reactor vessel pressure will tend to make the indicated water level read _____ than actual level; and the increased reference leg temperature will tend to make the indicated water level read _____ than actual level.

A. higher; higher

B. higher; lower

C. lower; higher

D. lower; lower

ANSWER: A.

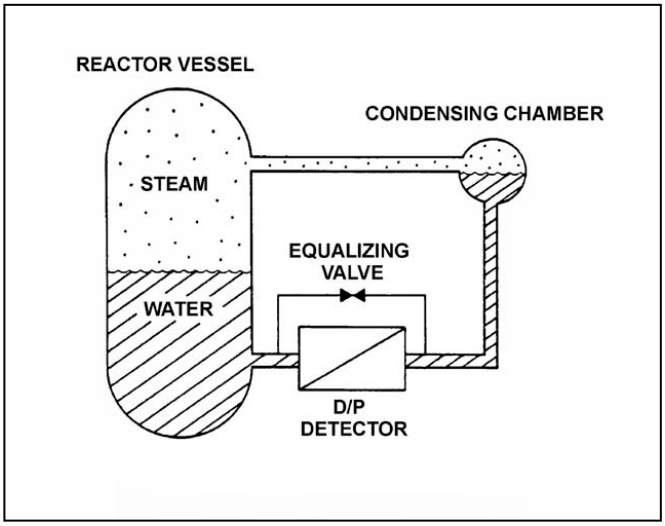

TOPIC: 291002
KNOWLEDGE: K1.08 [2.8/2.9]
QID: B3408 (P3407)

Refer to the drawing of a water storage tank with a differential pressure (D/P) level detection system (see figure below). Assume that the initial temperature of the reference leg and the water in the tank are the same, and that reference leg temperature and level do not change.

The level detector is being used in a level control system (not shown) that is calibrated to maintain tank level at 75 percent at the current tank water temperature (70°F) and pressure (5 psig).

If the tank water temperature remains constant, but the tank pressure is increased by 10 psig, the level control system will cause actual tank level to...

A. remain at 75 percent.

B. increase and stabilize above 75 percent.

C. oscillate around 75 percent.

D. decrease and stabilize below 75 percent.

ANSWER: A.

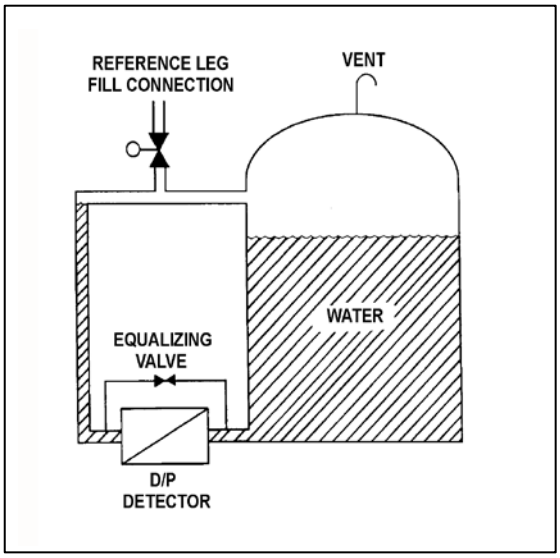

TOPIC: 291002
KNOWLEDGE: K1.08 [2.8/2.9]
QID: B4006 (P4004)

Refer to the drawing of a water storage tank with a differential pressure (D/P) level detection system (see figure below).

The level instrument has just been calibrated to indicate actual tank water level. Assume that tank water temperature and level remain constant. If the reference leg temperature increases by 20°F, indicated tank water level will...

A. be unpredictable.

B. equal the actual level.

C. be less than the actual level.

D. be greater than the actual level.

ANSWER: B.

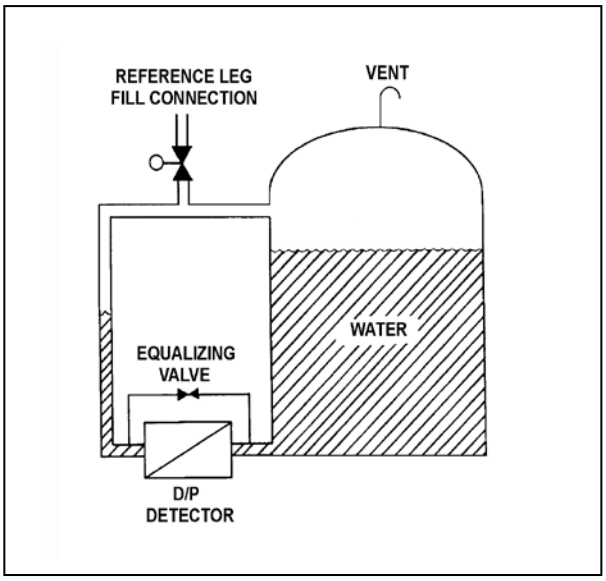

TOPIC: 291002
KNOWLEDGE: K1.09 [3.3/3.3]
QID: B165

Reactor feedwater flow and vessel level detectors use differential pressure (D/P) cells to measure flow and level. If a level D/P cell diaphragm fails, the level indication...

A. will go to 0.

B. will slowly move to 50 percent (midrange).

C. will indicate 100 percent (full range).

D. remains the same.

ANSWER: C.

TOPIC: 291002
KNOWLEDGE: K1.09 [3.3/3.3]
QID: B207

Refer to the drawing of a water storage tank with a differential pressure (D/P) level detection system (see figure below).

Which one of the following failures will cause the lowest stable water level indication? (Assume no operator action and no tank makeup.)

A. The tank level sensing line ruptures at the detector.

B. The reference leg ruptures at the detector.

C. The gas or vapor space ruptures.

D. The D/P cell diaphragm ruptures.

ANSWER: A.

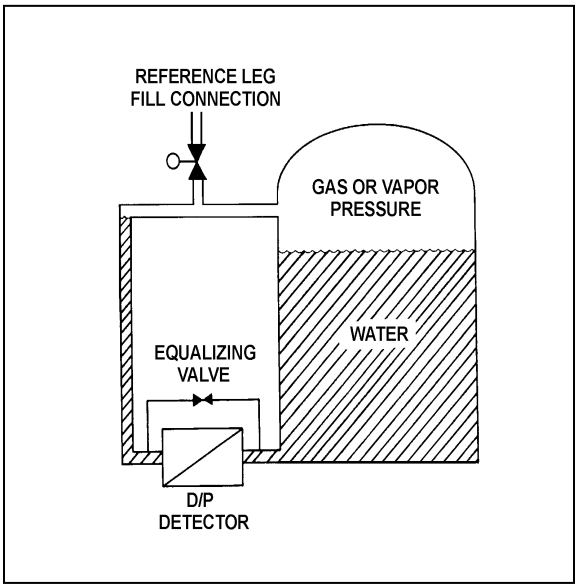

TOPIC: 291002
KNOWLEDGE: K1.09 [3.3/3.3]
QID: B1010 (P209)

Refer to the drawing of a reactor vessel differential pressure (D/P) level detection system (see figure below).

The D/P detector was calibrated at the current conditions. Which one of the following will cause the level instrument to indicate lower than actual level? (Assume actual level remains the same.)

A. The variable leg ruptures.

B. The equalizing valve is opened.

C. The reference leg temperature increases.

D. The D/P detector diaphragm ruptures.

ANSWER: A.

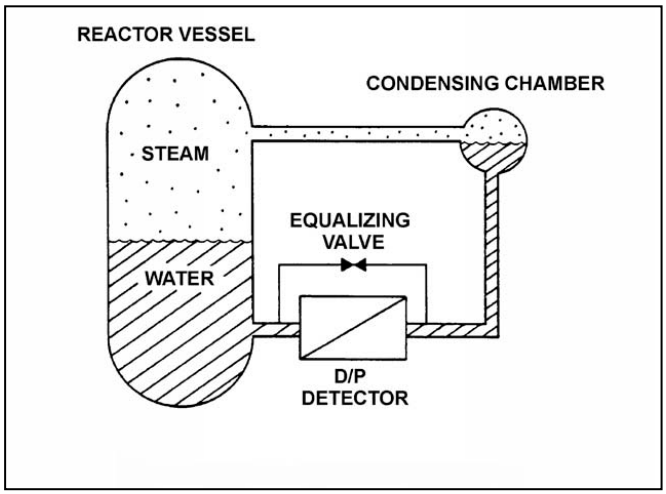

TOPIC: 291002
KNOWLEDGE: K1.09 [3.3/3.3]
QID: B1212 (P2408)

Refer to the drawing of a reactor vessel (RV) differential pressure (D/P) level detection system (see figure below).

Which one of the following events will result in a reactor vessel level indication that is greater than actual level?

A. The RV pressure increases by 50 psia.

B. The variable leg breaks and completely drains.

C. A portion of the reference leg water flashes to steam.

D. The temperature surrounding the RV and reference leg decreases by 30°F.

ANSWER: C.

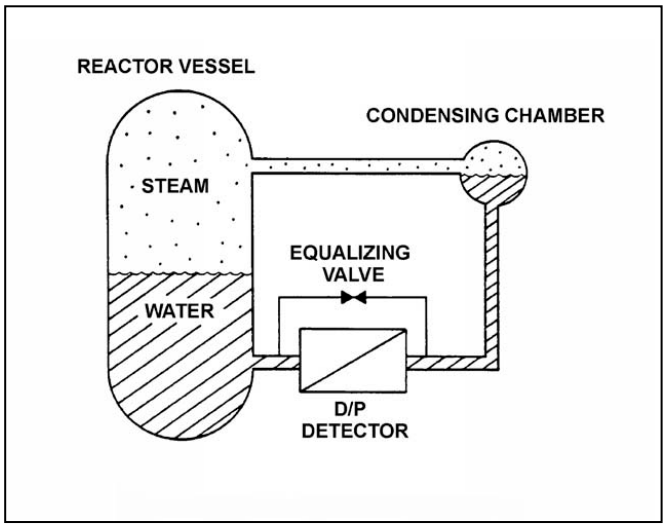

TOPIC: 291002
KNOWLEDGE: K1.09 [3.3/3.3]
QID: B1308

Refer to the drawing of a reactor vessel differential pressure (D/P) level detection system (see figure below).

Which one of the following will result in the lowest reactor vessel level indication?

A. The reactor pressure increases by 100 psig.

B. The D/P cell equalizing valve leaks by.

C. The reference leg flashes to steam.

D. The temperature of the reference leg decreases by 20°F.

ANSWER: D.

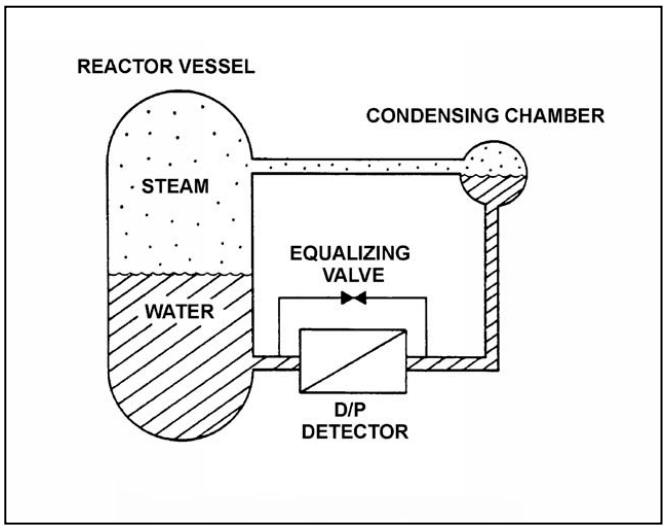

TOPIC: 291002
KNOWLEDGE: K1.09 [3.3/3.3]
QID: B1410

Refer to the drawing of a reactor vessel differential pressure (D/P) level detection system (see figure below).

Which one of the following events will result in a reactor vessel level indication that is greater than actual level?

A. The external pressure surrounding the D/P detector decreases by 2 psi.

B. Reactor vessel pressure increases by 10 psi with no change in actual water level.

C. Actual vessel level increases by 6 inches.

D. The temperature of the reference leg increases by 20°F.

ANSWER: D.

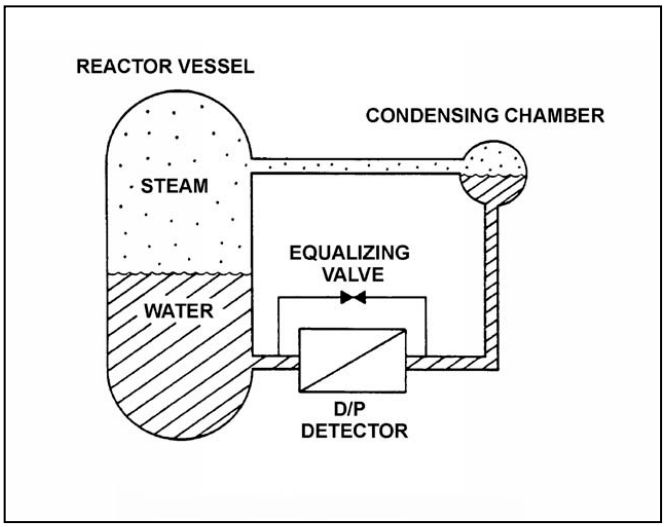

TOPIC: 291002
KNOWLEDGE: K1.09 [3.3/3.3]
QID: B2308 (P2308)

Refer to the drawing of a reactor vessel differential pressure (D/P) level detection system that was calibrated at normal operating conditions (see figure below).

A reactor vessel cooldown has resulted in a decrease in reactor vessel pressure from 900 psia to 400 psia in one hour. Without density compensation of the level instrumentation, at the end of the cooldown reactor vessel level indication would indicate _____ than actual level because the density of the water in the _____ has changed significantly.

A. higher; reference leg

B. higher; reactor vessel

C. lower; reference leg

D. lower; reactor vessel

ANSWER: B.

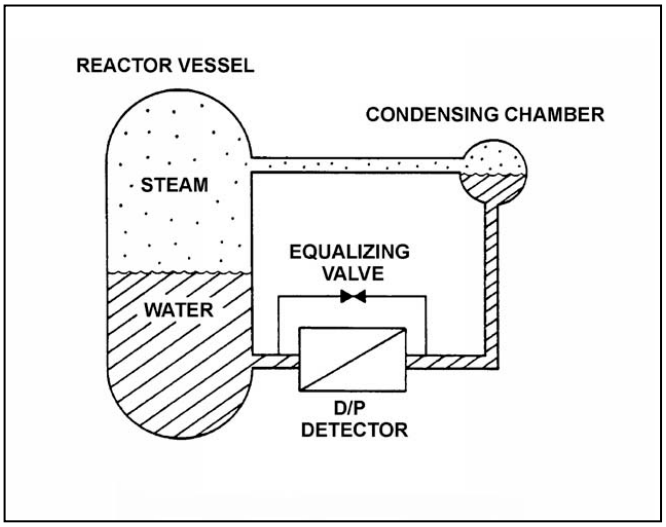

TOPIC: 291002
KNOWLEDGE: K1.09 [3.3/3.3]
QID: B2709

Refer to the drawing of a reactor vessel (RV) differential pressure (D/P) level detection system (see figure below).

The reactor vessel is supplying steam at normal operating temperature and pressure, and the level instrumentation has just been calibrated. Which one of the following events will result in a vessel level indication that is lower than actual level?

A. RV saturation pressure increases by 50 psi.

B. Actual RV water level decreases by 6 inches.

C. The external pressure surrounding the D/P detector decreases by 2 psi.

D. The external temperature surrounding the reference leg increases by 20°F.

ANSWER: A.

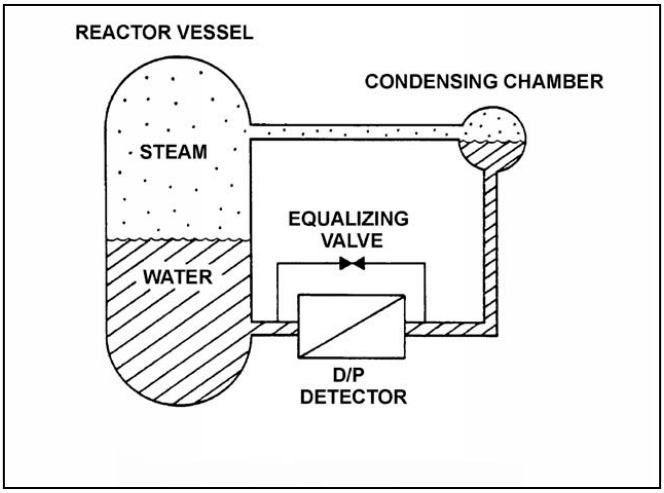

TOPIC: 291002
KNOWLEDGE: K1.09 [3.3/3.3]
QID: B3808

Refer to the drawing of a reactor vessel (RV) differential pressure (D/P) level detection system (see figure below).

A reactor is shutdown with the reactor coolant system being maintained at 100 psia. The level detector has just been calibrated. Suddenly a rupture in the condensing chamber of the level detector results in a rapid drop of the condensing chamber pressure to atmospheric pressure.

Given the following current conditions:

- The condensing chamber is at atmospheric pressure.
- RV pressure is 98 psia and slowly decreasing.
- Bulk reference leg temperature is 120°F.
- Actual RV level has not changed significantly.

Which one of the following describes the current RV level indication from the detector?

A. Off scale low, because the bulk of the water in the reference leg has flashed to steam.

B. Off scale high, because the bulk of the water in the reference leg has flashed to steam.

C. Off scale low, because the static pressure on the reference leg is much less than the static pressure in the RV.

D. Off scale high, because the static pressure on the reference leg is much less than the static pressure in the RV.

ANSWER: D.

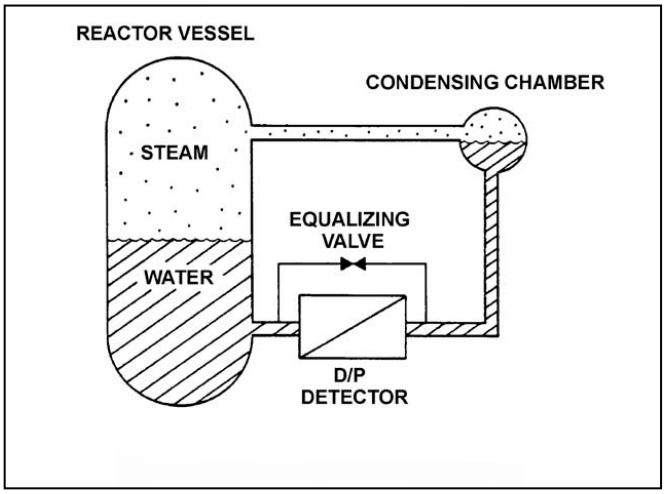

TOPIC: 291002
KNOWLEDGE: K1.10 [2.4/2.5]
QID: B410 (P413)

If the pressure sensed by a bourdon tube increases, the curvature of the detector will _____ because the greater force is being applied to the _____ curve of the detector.

A. increase; outer

B. increase; inner

C. decrease; outer

D. decrease; inner

ANSWER: C.

TOPIC: 291002
KNOWLEDGE: K1.10 [2.4/2.5]
QID: B610 (P2610)

Refer to the drawing of a bellows-type differential pressure (D/P) detector (see figure below).

The spring in this detector (shown in a compressed state) has weakened from long-term use. If the actual D/P is constant, how will indicated D/P respond as the spring weakens?

A. Increase, because the spring will expand more

B. Decrease, because the spring will expand more

C. Increase, because the spring will compress more

D. Decrease, because the spring will compress more

ANSWER: C.

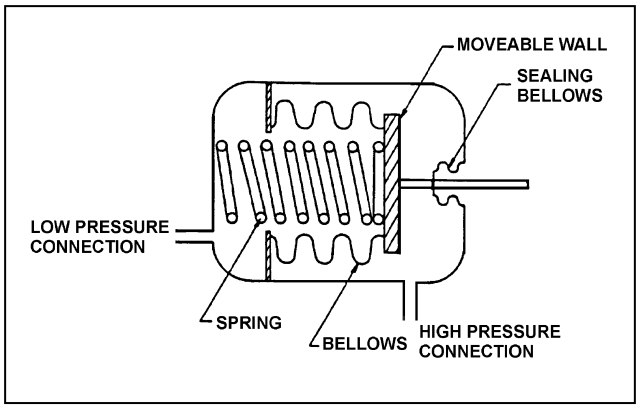

TOPIC: 291002
KNOWLEDGE: K1.10 [2.4/2.5]
QID: B1011 (P1508)

A bourdon tube works on the principle that when the pressure inside the tube decreases, the tube tends to: (Assume detected pressure remains above atmospheric pressure.)

A. coil, due to an increased pressure-induced force on the outside of the tube.

B. straighten, due to an increased pressure-induced force on the outside of the tube.

C. coil, due to the spring action of the metal overcoming the pressure-induced force on the inside of the tube.

D. straighten, due to the spring action of the metal overcoming the pressure-induced force on the inside of the tube.

ANSWER: C.

TOPIC: 291002
KNOWLEDGE: K1.10 [2.4/2.5]
QID: B2109 (P2109)

A centrifugal pump is taking suction from the bottom of a vented cylindrical storage tank that contains 100,000 gallons of water at 60°F. A pressure gauge at the inlet to the pump indicates 40 psig. Over the next several days, storage tank temperature increases to 90°F with <u>no</u> change in tank water level and <u>no</u> change in head loss in the pump suction line.

Which one of the following is the current pressure at the inlet to the pump?

A. 31.2 psig

B. 34.6 psig

C. 37.4 psig

D. 39.8 psig

ANSWER: D.

TOPIC: 291002
KNOWLEDGE: K1.11 [2.4/2.5]
QID: B210 (P210)

A simple bellows pressure detector is connected to a cooling water system. The detector is located in the reactor containment and has its low pressure side vented to the containment atmosphere. Current system pressure indication is 100 psig.

If a main steam line break raises containment pressure by 40 psig, the system pressure indication will: (Disregard any temperature effect on the pressure detector.)

A. increase by 40 psig.

B. increase by the square root of 40 psig.

C. decrease by 40 psig.

D. decrease by the square root of 40 psig.

ANSWER: C.

TOPIC: 291002
KNOWLEDGE: K1.11 [2.3/2.5]
QID: B711 (P710)

Cooling water system pressure is being monitored by a simple diaphragm pressure detector with its low pressure side vented to the containment. If a main steamline rupture raises containment pressure by 20 psi, cooling water system pressure indication will: (Disregard any temperature effect on the detector.)

A. increase by 20 psi.

B. decrease by 20 psi.

C. increase by the square root of 20 psi.

D. decrease by the square root of 20 psi.

ANSWER: B.

TOPIC: 291002
KNOWLEDGE: K1.11 [2.3/2.5]
QID: B1310 (P509)

A cooling water system bourdon tube pressure detector is located inside a sealed building and system pressure currently indicates 50 psig. A building ambient temperature increase of 20°F will cause a _____ change in indicated system pressure; a building pressure increase of 20 psig will cause a _____ change in indicated system pressure.

A. significant; significant

B. negligible; significant

C. significant; negligible

D. negligible; negligible

ANSWER: B.

TOPIC: 291002
KNOWLEDGE: K1.11 [2.3/2.5]
QID: B1908 (P2211)

Refer to the drawing of a bellows-type pressure detector (see figure below).

A bellows-type pressure detector with its low-pressure side vented to containment atmosphere is being used to measure reactor vessel pressure. A decrease in the associated pressure indication will be caused by either a containment pressure _____ or a _____.

A. increase; ruptured bellows

B. increase; broken spring

C. decrease; ruptured bellows

D. decrease; broken spring

ANSWER: A.

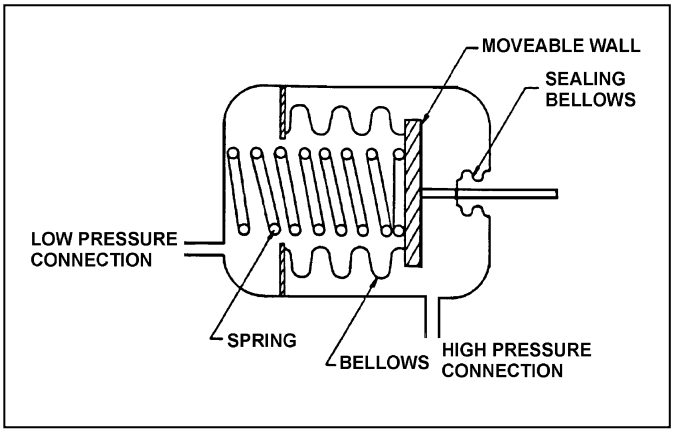

TOPIC: 291002
KNOWLEDGE: K1.11 [2.3/2.5]
QID: B2910 (P1011)

A properly calibrated 0 to 100 psia diaphragm pressure detector is connected to a pressurized system; the low pressure side of the detector is vented to the atmosphere. The detector is currently producing a system pressure indication of 75 psia.

If the detector diaphragm ruptures, indicated pressure will be approximately...

A. 0 psia.

B. 15 psia.

C. 60 psia.

D. 90 psia.

ANSWER: B.

TOPIC: 291002
KNOWLEDGE: K1.11 [2.3/2.5]
QID: B2912 (P3509)

The pressure within a cooling water system is 100 psig, as indicated by a bourdon tube pressure detector. The cooling water system and the detector are located inside a reactor containment building. The pressure detector case is vented to the containment building, which is currently at atmospheric pressure.

If a steam line rupture raises the containment building pressure by 20 psi, the cooling water system pressure indication will... (Disregard any temperature effect on the detector.)

A. decrease to 80 psig.

B. decrease by a small, but indeterminate amount.

C. increase to 120 psig.

D. increase by a small, but indeterminate amount.

ANSWER: A.

TOPIC: 291002
KNOWLEDGE: K1.12 [2.3/2.5]
QID: B611

Which one of the following parameters requires square root compensation when measured by a differential pressure detector?

A. Reactor vessel level

B. Condenser vacuum

C. Reactor vessel pressure

D. Recirculation pump flow rate

ANSWER: D.

TOPIC: 291002
KNOWLEDGE: K1.13 [2.9/3.1]
QID: B212 (P211)

A bourdon-tube pressure detector was indicating 50 percent of scale when it was suddenly exposed to a high pressure transient that caused permanent strain to the bourdon tube. The detector remained intact and actual pressure was restored to its original value.

During the pressure transient, the affected pressure indication initially went off-scale high. After the original pressure was restored, the indication was...

A. unpredictable.

B. less than 50 percent of scale.

C. 50 percent of scale.

D. greater than 50 percent of scale.

ANSWER: D.

TOPIC: 291002
KNOWLEDGE: K1.15 [2.6/2.8]
QID: B14

Which one of the following describes a characteristic of a thermocouple?

A. A junction between two dissimilar metals will exhibit a change in electrical resistance proportional to temperature.

B. A junction between two dissimilar metals will generate a voltage proportional to temperature.

C. Thermocouples are generally more accurate than resistance temperature detectors.

D. Indication will fail high off scale with an open circuit.

ANSWER: B.

TOPIC: 291002
KNOWLEDGE: K1.15 [2.6/2.8]
QID: B208 (P414)

A resistance temperature detector (RTD) is used in a balanced bridge circuit to indicate temperature. If the RTD develops an <u>open</u> circuit (bridge circuit remains intact), temperature indication will fail...

A. high.

B. low.

C. as is.

D. to midscale.

ANSWER: A.

TOPIC: 291002
KNOWLEDGE: K1.15 [2.6/2.8]
QID: B309 (P1510)

In contrast to a thermocouple, a resistance temperature detector...

A. is used in high temperature applications.

B. does not require an external power supply for temperature indication.

C. uses a single type of metal or alloy in the sensing element.

D. is commonly placed in direct contact with the monitored substance.

ANSWER: C.

TOPIC: 291002
KNOWLEDGE: K1.15 [2.6/2.8]
QID: B310 (P312)

If shorting occurs within a resistance temperature detector, the associated indication will fail...

A. low.

B. high.

C. as is.

D. to midscale.

ANSWER: A.

TOPIC: 291002
KNOWLEDGE: K1.15 [2.6/2.8]
QID: B1112

An operator suspects that a steam temperature instrument reading is not correct. A recently calibrated pressure gauge, which senses steam pressure for the same steam line, indicates 351 psig.

Assuming the system is operating at saturated conditions, what is the actual steam temperature?

A. 424°F

B. 428°F

C. 432°F

D. 436°F

ANSWER: D.

TOPIC: 291002
KNOWLEDGE: K1.15 [2.6/2.8]
QID: B1314 (P1209)

Refer to the drawing of a simple thermocouple circuit (see figure below).

A thermocouple temperature indication is initially 350°F. A small steam leak raises reference (cold) junction temperature by 20°F, while the measuring junction temperature remains constant. Without temperature compensation for the reference junction, the new temperature indication will be...

A. 310°F.

B. 330°F.

C. 370°F.

D. 390°F.

ANSWER: B.

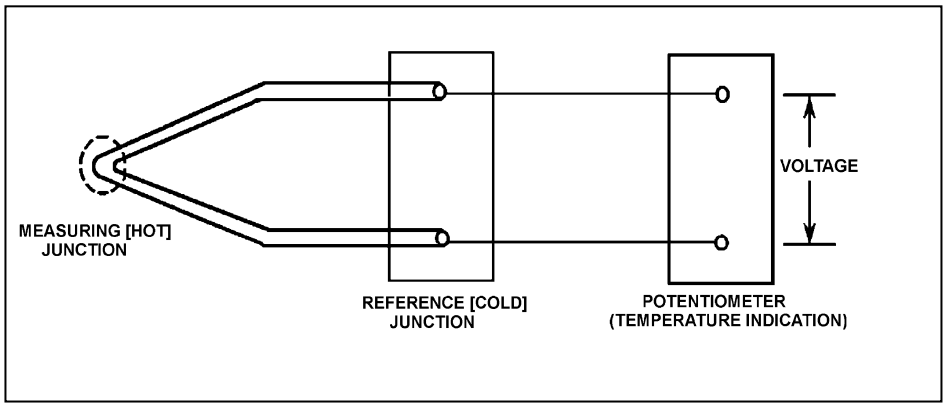

TOPIC: 291002
KNOWLEDGE: K1.15 [2.6/2.8]
QID: B1510 (P2212)

Refer to the drawing of a simple thermocouple circuit (see figure below).

Circuit temperature indication is initially 350°F. The reference (cold) junction temperature decreases by 10°F, while the measuring junction temperature remains constant. Without temperature compensation for the reference junction, the new temperature indication will be...

A. 340°F.

B. 350°F.

C. 360°F.

D. 370°F.

ANSWER: C.

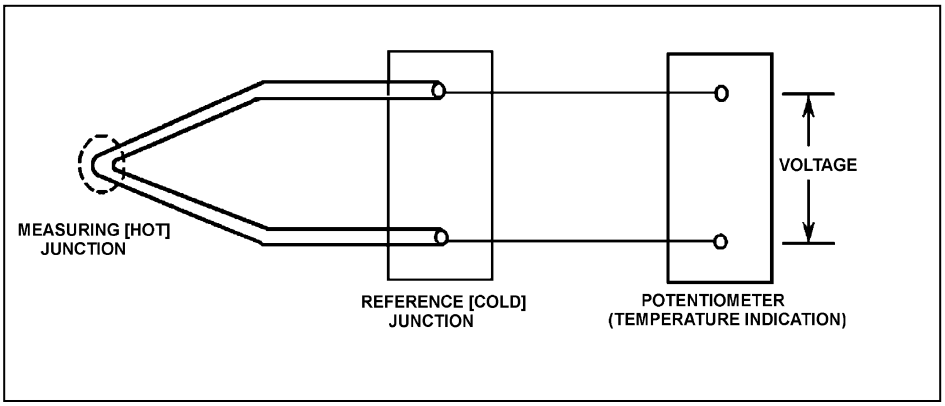

TOPIC: 291002
KNOWLEDGE: K1.15 [2.6/2.8]
QID: B1710 (P1710)

Refer to the drawing of a simple thermocouple circuit (see figure below).

A thermocouple temperature indication is initially 150°F. A small steam leak raises both the measuring (hot) junction and reference (cold) junction temperatures by 20°F. Without temperature compensation for the reference junction, the new temperature indication will be...

A. 130°F.

B. 150°F.

C. 170°F.

D. 190°F.

ANSWER: B.

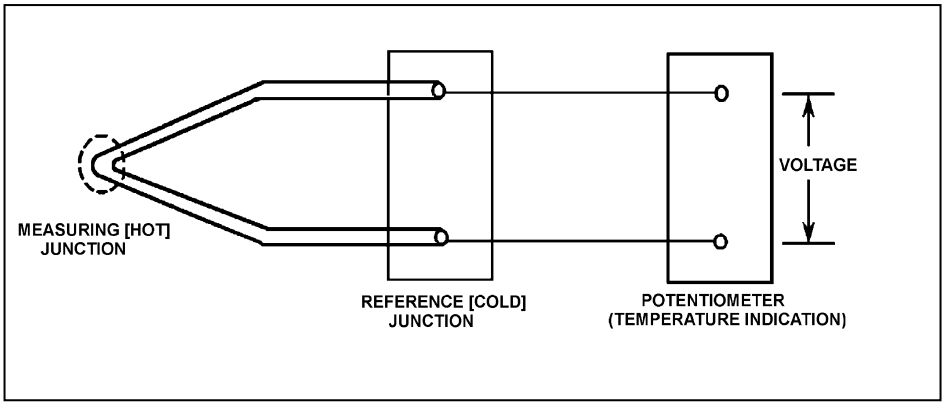

TOPIC: 291002
KNOWLEDGE: K1.15 [2.6/2.8]
QID: B2009 (P2011)

Refer to the drawing of a simple thermocouple circuit (see figure below) that is calibrated for a reference junction temperature of 90°F.

Thermocouple temperature indication is currently 150°F. Indicator range is from 0°F to 2000°F.

If one of the thermocouple extension wires loosens and becomes dislodged from its terminal in the reference junction panel, which one of the following temperature indications will result?

A. Minimum instrument reading (0°F)

B. 60°F

C. 90°F

D. Maximum instrument reading (2000°F)

ANSWER: C.

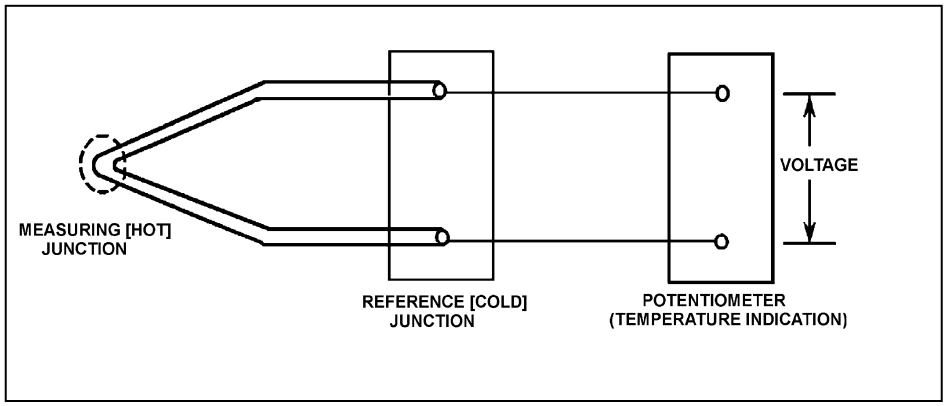

TOPIC: 291002
KNOWLEDGE: K1.15 [2.6/2.8]
QID: B2412 (P2409)

What is the purpose of the reference junction panel that is provided with many thermocouple circuits?

A. Ensures that thermocouple output is amplified sufficiently for use by temperature indication devices.

B. Ensures that temperature changes away from the thermocouple measuring junction do not affect thermocouple temperature indication.

C. Ensures that electrical noise in the thermocouple extension wires does not affect thermocouple temperature indication.

D. Ensures that different lengths of thermocouple extension wires do not affect thermocouple temperature indication.

ANSWER: B.

TOPIC: 291002
KNOWLEDGE: K1.15 [2.6/2.8]
QID: B2712 (P2711)

Unlike a resistance temperature detector, a typical thermocouple...

A. uses a single type of metal in the sensing element

B. requires a temperature-controlled reference junction.

C. can provide temperature input to a valve controller in a cooling water system.

D. requires an external power supply to provide indication of temperature.

ANSWER: B.

TOPIC: 291002
KNOWLEDGE: K1.15 [2.6/2.8]
QID: B2911 (P1412)

Refer to the drawing of a simple thermocouple circuit (see figure below).

A thermocouple temperature indication is initially 390°F. A small steam leak raises reference (cold) junction temperature by 20°F, while the measuring junction temperature remains constant. Without temperature compensation for the reference junction, the new temperature indication will be...

A. 370°F.

B. 390°F.

C. 400°F.

D. 410°F.

ANSWER: A.

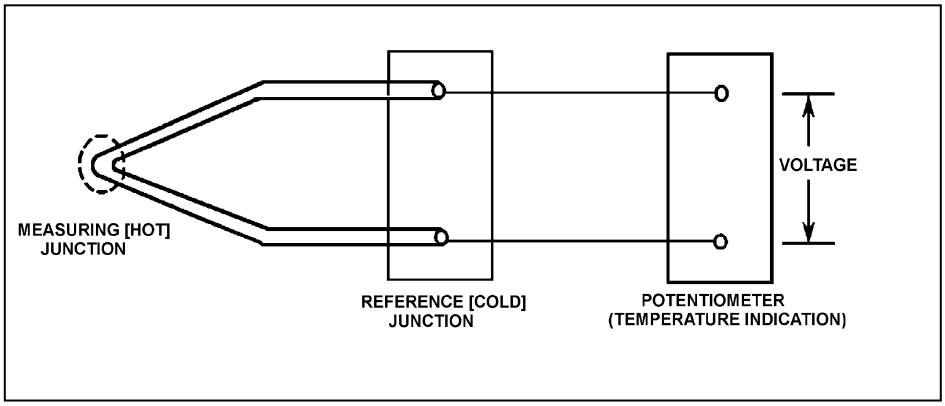

TOPIC: 291002
KNOWLEDGE: K1.15 [2.6/2.8]
QID: B3013 (P3011)

Refer to the drawing of a simple thermocouple circuit (see figure below).

A thermocouple temperature indication is initially 410°F with the reference (cold) junction at 125°F. An ambient temperature decrease lowers the reference junction temperature to 110°F, while the measuring junction temperature remains constant. Without temperature compensation for the reference junction, the new thermocouple temperature indication will be...

A. 380°F.

B. 395°F.

C. 410°F.

D. 425°F.

ANSWER: D.

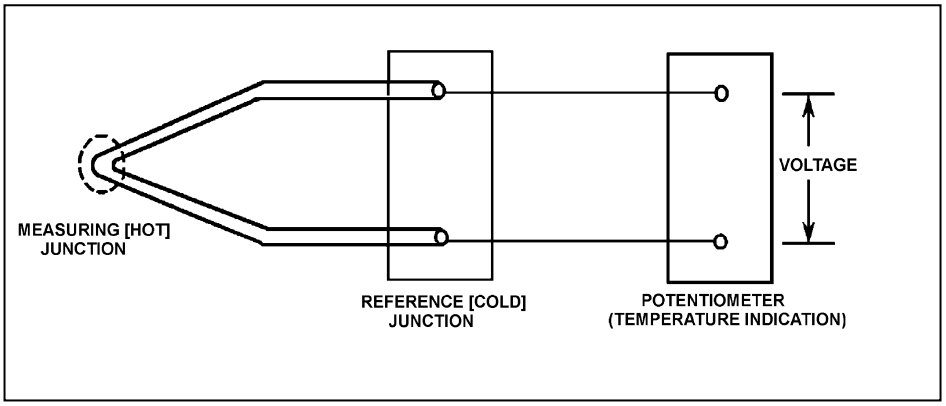

TOPIC: 291002
KNOWLEDGE: K1.15 [2.6/2.8]
QID: B4206 (P4206)

Refer to the drawing of a simple thermocouple circuit (see figure below).

Given that the temperatures at the measuring and reference junctions remain constant, if a ventilation system malfunction causes the temperature of the temperature indication panel to increase by 10°F, indicated temperature will...

A. not be affected.

B. increase by 10°F.

C. decrease by 10°F.

D. change in an unpredictable manner.

ANSWER: A.

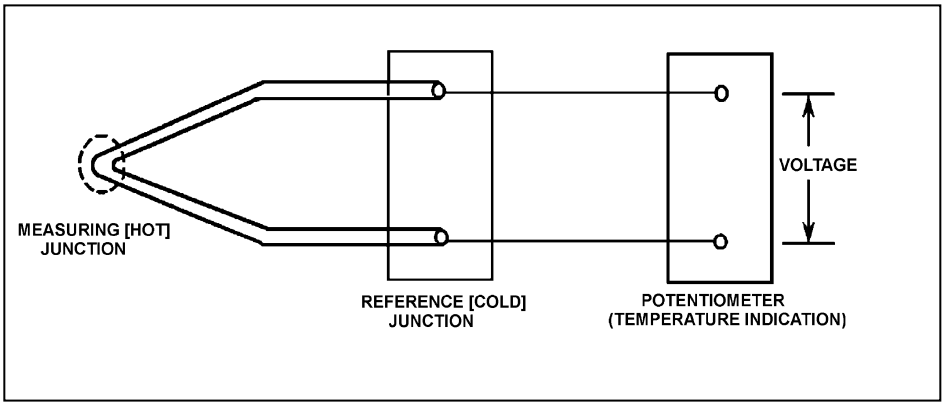

TOPIC: 291002
KNOWLEDGE: K1.15 [2.6/2.8]
QID: B5305 (P5305)

Refer to the drawing of a simple thermocouple circuit (see figure below).

The measuring and reference junctions are located inside the reactor containment building while the potentiometer is located in a remote location outside the containment building. Thermocouple temperature indication is initially 500°F.

An ambient temperature decrease outside the containment building lowers the temperature of the potentiometer by 10°F, while the measuring and reference junction temperatures remain constant. Thermocouple temperature indication at the lower ambient temperature will be...

A. 490°F.

B. 500°F.

C. 510°F.

D. unpredictable.

ANSWER: B.

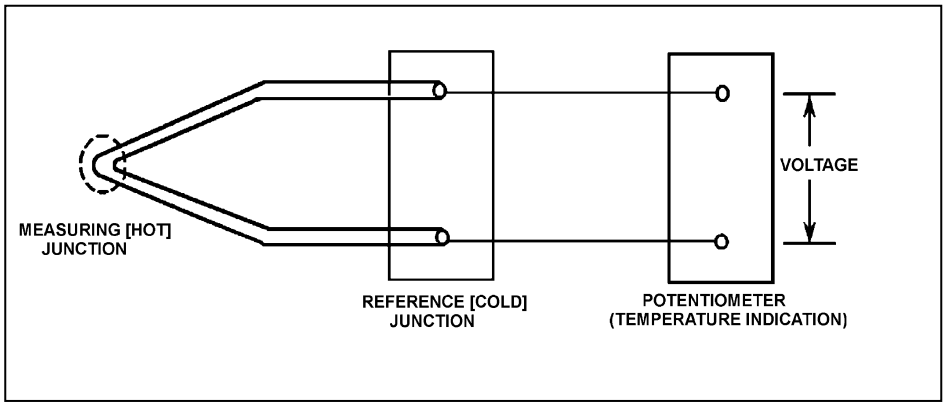

TOPIC: 291002
KNOWLEDGE: K1.15 [2.6/2.8]
QID: B5507 (P5505)

Refer to the drawing of a simple chromel-alumel thermocouple circuit (see figure below).

What is the effect on the thermocouple reference junctions if the chromel and alumel extension wires from the thermocouple connection head to the reference junction panel are replaced with copper wires?

A. The reference junctions will be located in the thermocouple connection head.

B. The reference junctions will still be located in the reference junction panel.

C. The reference junctions will be located in the temperature instrument.

D. There will no longer be any reference junctions.

ANSWER: A.

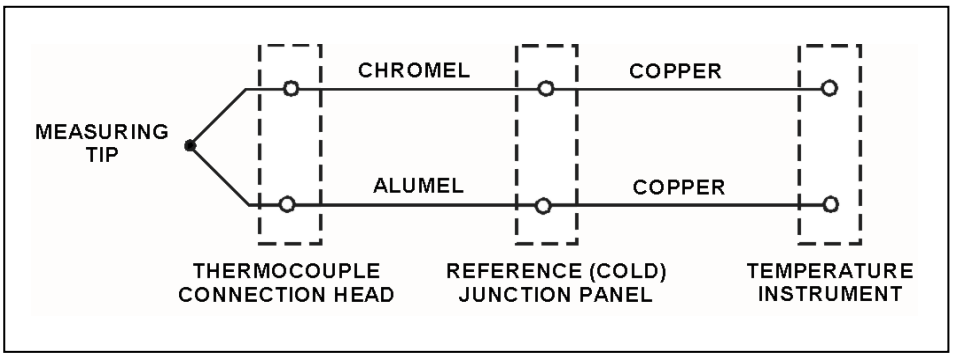

TOPIC: 291002
KNOWLEDGE: K1.15 [2.6/2.8]
QID: B5805 (P5805)

Which one of the following is a characteristic of a resistance temperature detector but not a thermocouple?

A. Sensing element is made from a single metal or alloy.

B. Requires a reference junction for accurate temperature measurement.

C. Extension leads made from relatively expensive metals or alloys are required for accurate temperature measurement.

D. Temperature measurement relies on a sensor material property that varies directly with the change in the measured temperature.

ANSWER: A.

TOPIC: 291002
KNOWLEDGE: K1.15 [2.6/2.8]
QID: B6005 (P6004)

Refer to the drawing of a simple chromel-alumel thermocouple circuit (see figure below).

What is the effect on the thermocouple reference junctions if the copper extension wires from the reference junction panel to the temperature instrument are replaced with alumel (top) and chromel (bottom) extension wires?

A. The reference junctions will be located in the thermocouple connection head.

B. The reference junctions will still be located in the reference junction panel.

C. The reference junctions will be located in the temperature instrument.

D. There will no longer be any reference junctions.

ANSWER: C.

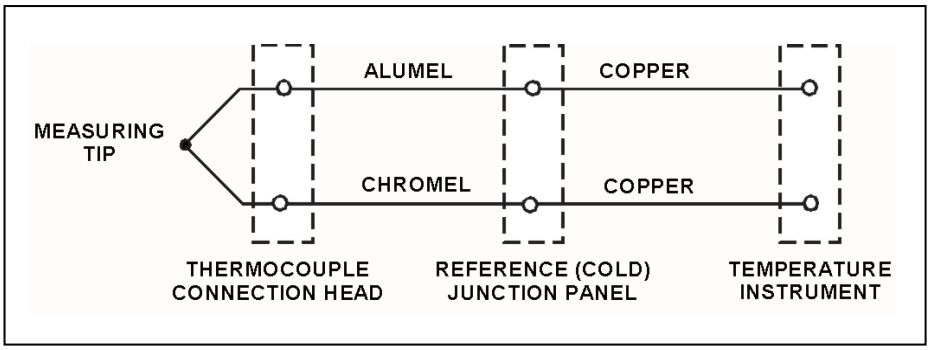

TOPIC: 291002
KNOWLEDGE: K1.15 [2.6/2.8]
QID: B6306 (P6305)

Refer to the drawing of a simple chromel-alumel thermocouple circuit (see figure below).

The thermocouple, thermocouple connection head, and reference junction panel are located inside a reactor building (RB) while the temperature instrument is located outside the RB. Thermocouple temperature indication is initially 440°F.

A steam leak inside the RB increases the temperatures of the thermocouple connection head and reference junction panel by 40°F, while the temperature at the measuring tip is unchanged. What is the resulting temperature indication?

A. 400°F

B. 440°F

C. 480°F

D. 520°F

ANSWER: A.

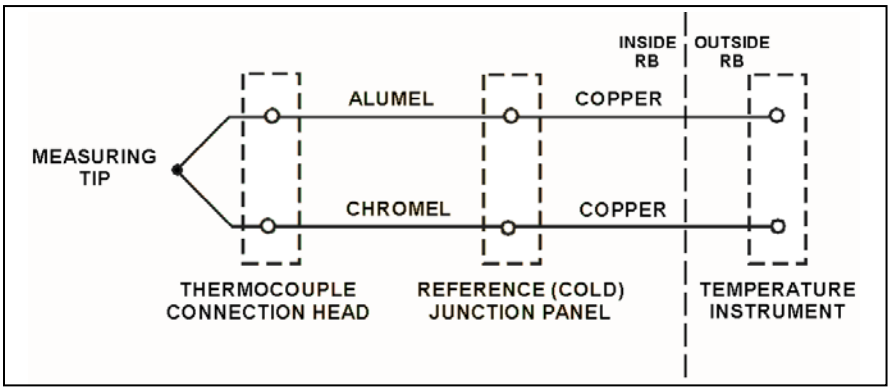

TOPIC: 291002
KNOWLEDGE: K1.15 [2.6/2.8]
QID: B6506 (P6504)

Because of a thermocouple temperature display failure, the millivolt output of a thermocouple circuit is being converted to a temperature value using conversion tables. The tables are based on a thermocouple reference junction temperature of 32°F. The actual reference junction is located in a panel that is maintained at 120°F. Room temperature surrounding the panel is 80°F.

What adjustment must be made to the temperature value taken from the conversion tables to calculate the actual temperature at the measuring tip of the thermocouple?

A. Add 48°F.

B. Subtract 48°F.

C. Add 88°F.

D. Subtract 88°F.

ANSWER: C.

TOPIC: 291002
KNOWLEDGE: K1.15 [2.6/2.8]
QID: B6905 (P6905)

A simple two-wire resistance temperature detector (RTD) is being used to measure the temperature of a water system. Copper extension wires run from the RTD to a temperature instrument 40 feet away. If the temperature of the extension wires decreases, the electrical resistance of the extension wires will _____; and the temperature indication will _____ unless temperature compensation is provided.

A. increase; increase

B. increase; decrease

C. decrease; increase

D. decrease; decrease

ANSWER: D.

TOPIC: 291002
KNOWLEDGE: K1.15 [2.6/2.8]
QID: B7106 (P7103)

A resistance temperature detector (RTD) and a thermocouple (TC) are commonly used sensors for temperature measurement. If a temperature display fails, which of the sensors, if any, has a property that can be measured manually and converted to a temperature value with the aid of conversion tables.

A. TC only.

B. RTD only.

C. Both TC and RTD.

D. Neither TC nor RTD.

ANSWER: C.

TOPIC: 291002
KNOWLEDGE: K1.15 [2.6/2.8]
QID: B7206 (P7205)

Because of a thermocouple temperature display failure, the millivolt output of a thermocouple circuit is being converted to a temperature value using conversion tables. The tables are based on a thermocouple reference junction temperature of 32°F. The actual reference junction is located in a panel that is currently at 80°F.

The temperature value taken from the conversion tables is 120°F.

What adjustment must be made to the temperature value taken from the conversion tables to calculate the actual temperature at the measuring tip of the thermocouple?

A. Add 48°F.

B. Subtract 48°F.

C. Add 88°F.

D. Subtract 88°F.

ANSWER: A.

TOPIC: 291002
KNOWLEDGE: K1.15 [2.6/2.8]
QID: B7405 (P7405)

Refer to the drawing of a simple thermocouple circuit (see figure below).

The measuring junction temperature is currently 300°F while the reference junction temperature is being held constant at 120°F. The thermocouple circuit is capable of indicating 32°F to 600°F and has just been calibrated at the current conditions.

If the measuring junction temperature decreases and stabilizes at 90°F, what temperature will be indicated?

A. 32°F

B. 60°F

C. 90°F

D. 120°F

ANSWER: C.

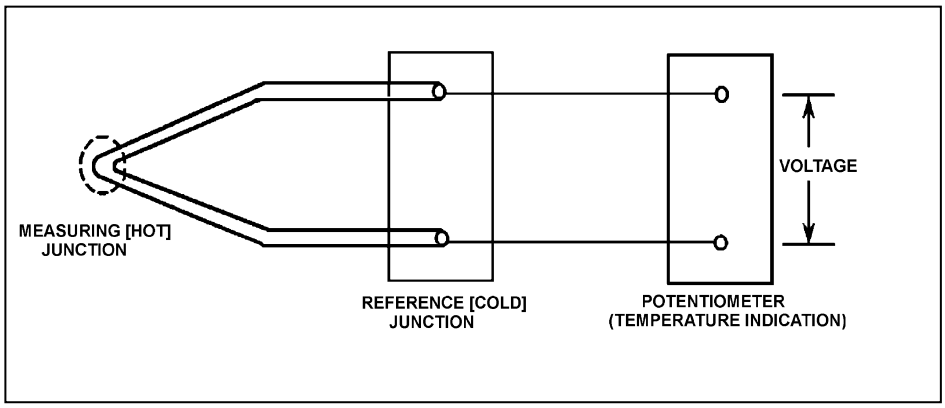

TOPIC: 291002
KNOWLEDGE: K1.16 [2.5/2.7]
QID: B812 (P813)

What type of sensor is most commonly used to provide remote position indication of a valve that is normally either fully open or fully closed?

A. Limit switch

B. Reed switch

C. Servo transmitter

D. Linear variable differential transformer

ANSWER: A.

TOPIC: 291002
KNOWLEDGE: K1.16 [2.5/2.7]
QID: B1712 (P1313)

Which one of the following devices is commonly used to provide remote indication of valve position on an analog meter in units of "percent of full open"?

A. Limit switch

B. Reed switch

C. Linear variable differential transformer

D. Resistance temperature detector

ANSWER: C.

TOPIC: 291002
KNOWLEDGE: K1.16 [2.5/2.7]
QID: B2611

Reed switches are being used in an electrical measuring circuit to monitor the position of a control rod in a reactor. The reed switches are mounted in a column below the reactor vessel such that the control rod drive shaft passes by the reed switches as the control rod is withdrawn.

Which one of the following describes the action that causes the electrical output of the measuring circuit to change as the control rod is withdrawn?

A. An AC coil on the control rod drive shaft induces a voltage into each reed switch as the drive shaft passes by.

B. A metal tab on the control rod drive shaft mechanically closes each reed switch as the drive shaft passes by.

C. The primary and secondary coils of each reed switch attain maximum magnetic coupling as the drive shaft passes by.

D. A permanent magnet on the control rod drive shaft attracts the movable contact arm of each reed switch as the drive shaft passes by.

ANSWER: D.

TOPIC: 291002
KNOWLEDGE: K1.16 [2.5/2.7]
QID: B2811 (P2813)

Refer to the simplified drawing of a control rod position detector circuit (see figure below).

A magnet on the control rod extension (or drive) shaft sequentially closes individual reed switches mounted vertically adjacent to the control rod drive housing. A constant +5 DC volts is supplied to the input of the resistor network at resistor R_1.

A control rod is initially fully inserted such that all reed switch contacts are open; then the rod is withdrawn until reed switch contact S_1 is dosed. Compared to the initial circuit currents, the current through resistor R_5 after the rod withdrawal will be _____; and the output current of the resistor network to the amplifier will be _____.

A. lower; higher

B. lower; lower

C. higher; higher

D. higher; lower

ANSWER: A.

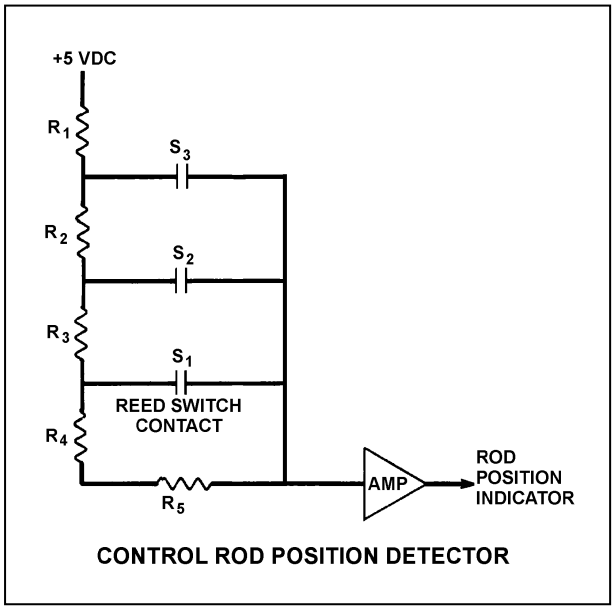

CONTROL ROD POSITION DETECTOR

TOPIC: 291002
KNOWLEDGE: K1.19 [3.0/3.1]
QID: B213 (P214)

Most of the electrons collected in a fission chamber are released as a result of ionizations caused directly by...

A. fission fragments.

B. fission gammas.

C. fission betas.

D. fissionable materials.

ANSWER: A.

TOPIC: 291002
KNOWLEDGE: K1.19 [3.0/3.1]
QID: B612

Gamma radiation contributes to the output of a fission chamber mainly by interacting with the...

A. detector gas.

B. detector leads.

C. center electrode.

D. U-235 coating on the detector walls.

ANSWER: A.

TOPIC: 291002
KNOWLEDGE: K1.19 [3.0/3.1]
QID: B1113 (P1909)

What is the function of the positive electrode in an ion chamber?

A. Produce ions when exposed to a radiation field.

B. Release electrons to combine with positive ions.

C. Perform gas quenching to maximize detector sensitivity.

D. Collect the electrons released during gas ionization.

ANSWER: D.

TOPIC: 291002
KNOWLEDGE: K1.19 [3.0/3.1]
QID: B1214

A reactor scrammed due to a loss-of-coolant accident one hour ago. To verify adequate reactor vessel water level, the source range monitors (SRMs) were inserted. As the SRMs entered the core, source range count rate increased and then became relatively stable as the SRMs continued upward into the water-filled region of the core.

If the SRMs enter a voided section of the core, count rate will suddenly...

A. decrease, due to increased neutron leakage.

B. decrease, due to decreased fast fission.

C. increase, due to increased neutron migration length.

D. increase, due to decreased moderator neutron absorption.

ANSWER: A.

TOPIC: 291002
KNOWLEDGE: K1.19 [3.0/3.1]
QID: B2312

A loss-of-coolant accident resulted in a reactor scram, after which the source range monitors (SRMs) were fully inserted into the core.

If the SRMs are currently in a voided section of the core, how will the source range count rate change when the SRMs are withdrawn below core water level, and why?

A. Decrease, due to decreased neutron migration length.

B. Decrease, due to increased moderator neutron absorption.

C. Increase, due to decreased neutron leakage.

D. Increase, due to increased fast fission.

ANSWER: C.

TOPIC: 291002
KNOWLEDGE: K1.19 [3.0/3.1]
QID: B3112

Fission chamber detectors are used to monitor reactor power/neutron level in a shutdown reactor as well as a reactor operating at rated power (and all power levels in between). At what power level(s) is it necessary to compensate the output of the fission chamber detectors for gamma interactions with the detectors and why?

A. At all power levels, because gamma interactions produce larger detector pulses than neutron interactions.

B. At all power levels, because gamma interactions produce smaller detector pulses than neutron interactions.

C. Only when shutdown or at low power levels, because gamma flux is <u>not</u> proportional to reactor power at low power levels.

D. Only when operating at high power levels, because gamma flux is <u>not</u> proportional to reactor power at high power levels.

ANSWER: C.

TOPIC: 291002
KNOWLEDGE: K1.21 [2.8/2.9]
QID: B513

A fission chamber used for reactor neutron monitoring is operating in the ionization region of the gas ionization curve. If the voltage supplied to the fission chamber is continuously increased, which one of the following operating regions will the detector enter next?

A. Proportional

B. Recombination

C. Geiger-Mueller

D. Limited proportional

ANSWER: A.

TOPIC: 291002
KNOWLEDGE: K1.21 [2.8/2.9]
QID: B713

A fission chamber neutron monitoring instrument is operating in the proportional region of the gas ionization curve. If the voltage supplied to the fission chamber is continuously decreased, which one of the following operating regions will the detector enter next?

A. Geiger-Mueller

B. Recombination

C. Limited proportional

D. Ionization

ANSWER: D.

TOPIC: 291002
KNOWLEDGE: K1.21 [2.8/2.9]
QID: B814 (P1812)

A gas-filled radiation detector operating in the proportional region is exposed to a constant gamma radiation field. If the applied voltage is increased but maintained within the proportional region, the rate of ion collection will...

A. increase, because more secondary ionizations are occurring in the detector.

B. increase, because fewer primary ions are recombining in the detector prior to reaching the electrodes.

C. stay approximately the same, because the ion chamber is operating at saturated conditions.

D. stay approximately the same, because all of the primary ions were already being collected at the lower voltage.

ANSWER: A.

TOPIC: 291002
KNOWLEDGE: K1.21 [2.8/2.9]
QID: B2413 (P2014)

What is the effect on a gas-filled neutron detector operating in the proportional region if the detector voltage is increased such that the detector operates closer to the high end of the proportional region?

A. Neutron-induced pulses will become so large that gamma pulse discrimination is no longer needed, yielding a more accurate neutron count rate.

B. The positive space charge effect will increase and prevent collection of both gamma- and neutron-induced pulses, yielding a less accurate neutron count rate.

C. A high rate of incident gamma radiation will result in the combination of multiple small gamma-induced pulses into larger pulses. The larger combined pulses will be counted as neutron-induced pulses, yielding a less accurate neutron count rate.

D. Detection of any single ionizing event will result in ionizing nearly the entire detector gas volume. The resulting large pulses will prevent the detector from differentiating between radiation types, yielding a less accurate neutron count rate.

ANSWER: C.

TOPIC: 291002
KNOWLEDGE: K1.21 [2.8/2.9]
QID: B2613 (P2313)

A gas-filled radiation detector operating in the proportional region is exposed to a constant gamma radiation field. If the applied voltage is decreased but maintained within the proportional region, the rate of ion collection will...

A. stay approximately the same, because all primary ions are collected as long as detector voltage remains in the proportional region.

B. stay approximately the same, because the detector is still operating at saturated conditions.

C. decrease, because a decreased space charge around the positive electrode reduces gas amplification.

D. decrease, because fewer secondary ionizations are occurring in the detector.

ANSWER: D.

TOPIC: 291002
KNOWLEDGE: K1.21 [2.8/2.9]
QID: B5607 (P5606)

A proportional detector with pulse height discrimination circuitry is being used in a constant field of neutron and gamma radiation to provide source range neutron count rate indication. Assume that the pulse height discrimination setpoint does <u>not</u> change.

If the detector voltage is increased but maintained within the proportional region, count rate indication will increase because...

A. a single neutron- or gamma-induced ionizing event will result in multiple pulses inside the detector.

B. the ratio of the number of neutron-induced pulses to gamma-induced pulses inside the detector will increase.

C. the positive space charge effect will increase and promote the collection of both gamma- and neutron-induced pulses.

D. all detector pulses will increase in amplitude and previously uncounted gamma pulses will be added to the total count rate.

ANSWER: D.

TOPIC: 291002
KNOWLEDGE: K1.22 [3.0/3.1]
QID: B511 (P1514)

A fission chamber neutron monitoring instrument is operating in the proportional region. If a complete loss of fission chamber gas pressure occurs, the instrument indication will fail...

A. upscale.

B. downscale.

C. as is.

D. to midscale.

ANSWER: B.

TOPIC: 291002
KNOWLEDGE: K1.22 [3.0/3.1]
QID: B613

Which one of the following will cause an upscale failure of a fission chamber neutron detector?

A. The detector electrode high voltage power supply output has decreased by 5 percent due to setpoint drift.

B. The detector chamber has become flooded with water due to leakage around the electrodes.

C. A power supply fuse in the amplifier circuit for the neutron monitoring instrument drawer has opened.

D. The uranium-235 in the detector coating has been transformed to uranium-236 by neutron absorption.

ANSWER: B.

TOPIC: 291002
KNOWLEDGE: K1.22 [3.0/3.1]
QID: B3414

Two identical fission chamber neutron detectors (operating in the proportional region) are being used to monitor the neutron flux during a reactor startup. Detector A has developed a tiny leak and the argon fill gas pressure has decreased to approximately 25 percent of the gas pressure in detector B. When the reactor reaches criticality, the neutron level indicated by detector A will be _____ than the neutron level indicated by detector B, primarily because the incident neutrons result in _____.

A. larger; more fissions in detector A

B. smaller; fewer fissions in detector A

C. larger; more ionizations in the detector A gas

D. smaller; fewer ionizations in the detector A gas

ANSWER: D.

TOPIC: 291002
KNOWLEDGE: K1.22 [3.0/3.1]
QID: B7007

Two identical fission chamber neutron detectors, operating in the proportional region, are being used to monitor core neutron flux during a reactor startup. Detector A has developed a small leak that caused its argon fill gas pressure to decrease to approximately 25 percent of the gas pressure in detector B. When the reactor reaches criticality, the neutron flux indication produced by detector B will be _____ than the neutron flux indication produced by detector A, primarily because the higher gas pressure in detector B results in _____.

A. greater; more neutron-induced fissions in detector B

B. smaller; fewer neutron-induced fissions in detector B

C. greater; more ionizations in the detector B fill gas

D. smaller; fewer ionizations in the detector B fill gas

ANSWER: C.

TOPIC: 291002
KNOWLEDGE: K1.23 [2.8/2.9]
QID: B313 (P2013)

A gas-filled radiation detector operating in the ion chamber is exposed to a constant gamma radiation field. If the applied voltage is increased but maintained within the ion chamber region, the rate of ion collection will...

A. increase, because more secondary ionizations are occurring in the detector.

B. stay approximately the same, because all of the primary ions were already being collected at the lower voltage.

C. increase, because fewer primary ions are recombining in the detector prior to reaching the electrodes.

D. stay approximately the same, because the ion chamber is operating at saturated conditions.

ANSWER: B.

TOPIC: 291002
KNOWLEDGE: K1.23 [2.8/2.9]
QID: B314 (P15)

Scintillation detectors convert radiation energy into light by a process known as...

A. gas amplification.

B. space charge effect.

C. luminescence.

D. photoionization.

ANSWER: C.

TOPIC: 291002
KNOWLEDGE: K1.23 [2.8/2.9]
QID: B414 (P2913)

Which one of the following statements describes the operation of a gas-filled radiation detector operating in the proportional region?

A. The number of ions collected from both primary and secondary ionizations is independent of the applied voltage.

B. Essentially all of the ions from primary ionizations are collected; the number of ions collected from secondary ionizations is independent of the applied voltage.

C. The number of ions collected from both primary and secondary ionizations varies directly with the applied voltage on a logarithmic scale.

D. Essentially all of the ions from primary ionizations are collected; the number of ions collected from secondary ionizations varies directly with the applied voltage on a logarithmic scale.

ANSWER: D.

TOPIC: 291002
KNOWLEDGE: K1.23 [2.8/2.9]
QID: B714 (P714)

Which one of the following types of radiation is the major contributor to the dose indication on a self-reading pocket dosimeter (SRPD)?

A. Alpha

B. Beta

C. Gamma

D. Neutron

ANSWER: C.

TOPIC: 291002
KNOWLEDGE: K1.23 [2.8/2.9]
QID: B913 (P1613)

Which one of the following describes a characteristic of a Geiger-Mueller radiation detector?

A. Radiation types can be identified by pulse height and duration.

B. Specific radionuclides can be identified with the use of gamma spectrometry.

C. Small variations in applied voltage will result in large changes in detector output.

D. Any type of radiation that ionizes the detector gas will produce the same magnitude detector output pulse.

ANSWER: D.

TOPIC: 291002
KNOWLEDGE: K1.23 [2.8/2.9]
QID: B1114 (P2613)

Which one of the following describes the reason for the high sensitivity of a gas-filled radiation detector operating in the Geiger-Mueller region?

A. Any radiation-induced ionization results in a large detector output pulse.

B. Geiger-Mueller detectors are longer than other types of radiation detectors, resulting in greater detector surface area.

C. The detector output is inversely proportional to the applied voltage within the Geiger-Mueller region.

D. High detector voltage allows differentiation between the various radiation types.

ANSWER: A.

TOPIC: 291002
KNOWLEDGE: K1.23 [2.8/2.9]
QID: B1514 (P1513)

Which one of the following lists the two types of gas-filled radiation detectors whose outputs will be least affected by a small variation (±10 volts) in the voltage applied to the detectors? (Assume the applied voltage remains within normal range.)

A. Limited proportional and Geiger-Mueller

B. Ion chamber and proportional

C. Proportional and limited proportional

D. Geiger-Mueller and ion chamber

ANSWER: D.

TOPIC: 291002
KNOWLEDGE: K1.23 [2.8/2.9]
QID: B1714 (P1713)

A Geiger-Mueller radiation detector is located in a radiation field consisting of beta, gamma, and fast neutron radiation. Assuming each type of radiation enters the detector gas chamber and ionizes the detector gas, which one of the following describes the resulting detector pulse sizes?

A. Beta radiation will produce a larger pulse size than either gamma or fast neutron radiation.

B. Gamma radiation will produce a larger pulse size than either beta or fast neutron radiation.

C. Fast neutron radiation will produce a larger pulse size than either beta or gamma radiation.

D. Beta, gamma, and fast neutron radiation will produce pulse sizes that are equal in magnitude.

ANSWER: D.

TOPIC: 291002
KNOWLEDGE: K1.23 [2.8/2.9]
QID: B2414 (P2413)

A gas-filled radiation detector operating in the ion chamber region is exposed to a constant gamma radiation field. If the applied voltage is decreased but maintained within the ion chamber region, the rate of ion collection will...

A. stay approximately the same, because all of the primary ions continue to be collected and essentially no secondary ionizations are occurring.

B. stay approximately the same, because detector operation in the ionization chamber region is characterized by complete ionization of the detector gas.

C. decrease, because fewer primary ionizations are occurring in the detector as detector voltage decreases.

D. decrease, because fewer secondary ionizations are occurring in the detector as detector voltage decreases.

ANSWER: A.

TOPIC: 291002
KNOWLEDGE: K1.23 [2.8/2.9]
QID: B3907 (P3906)

A beta particle and an alpha particle enter and cause ionization in a gas-filled radiation detector operating in the Geiger-Mueller region. Which one of the following accurately compares the amplitude of the detector pulses caused by each type of radiation?

A. The beta particle pulse will be larger in amplitude.

B. The alpha particle pulse will be larger in amplitude.

C. The pulses will be identical for both types of radiation.

D. Cannot be determined without particle kinetic energy information.

ANSWER: C.

TOPIC: 291002
KNOWLEDGE: K1.23 [2.8/2.9]
QID: B4507 (P4506)

A nuclear power plant has been shut down for one month. A portable gas-filled radiation detector is needed to monitor shutdown reactor core neutron level from a location outside the reactor vessel. The detector must be able to distinguish between ionizations caused by gamma and neutron radiation.

Which region(s) of the gas-filled detector characteristic curve is/are acceptable for operation of the detector?

A. Geiger-Mueller, Ion Chamber, and Proportional regions are all acceptable.

B. Proportional region is acceptable, and Ion Chamber region also may be usable.

C. Ion Chamber region is acceptable, and Geiger-Mueller region also may be usable.

D. Geiger-Mueller region is acceptable, and Proportional region also may be usable.

ANSWER: B.

TOPIC: 291002
KNOWLEDGE: K1.23 [2.8/2.9]
QID: B4807 (P4806)

Quench gases are added to gas-filled radiation detectors that operate in the _____ region; the quench gases prevent a single ionization event from causing _____ in the detector gas volume.

A. ion chamber; multiple discharges

B. ion chamber; secondary ionizations

C. Geiger-Mueller; multiple discharges

D. Geiger-Mueller; secondary ionizations

ANSWER: C.

TOPIC: 291002
KNOWLEDGE: K1.23 [2.8/2.9]
QID: B4907 (P4906)

Which one of the following contains the pair of radiation detector types that are the most sensitive to low-energy beta and/or gamma radiation?

A. Geiger-Mueller and scintillation

B. Geiger-Mueller and ion chamber

C. Ion chamber and scintillation

D. Ion chamber and proportional

ANSWER: A.

TOPIC: 291002
KNOWLEDGE: K1.23 [2.8/2.9]
QID: B5207 (P5206)

A beta particle and an alpha particle with equal kinetic energies cause ionization in a gas-filled radiation detector. The detector is operating in the ion chamber region of the gas ionization curve. Which one of the following describes the amplitudes of the detector pulses caused by each type of radiation?

A. The beta particle pulse will be larger in amplitude.

B. The alpha particle pulse will be larger in amplitude.

C. The amplitudes of both pulses will be approximately equal for all detector voltages in the ion chamber region.

D. The amplitudes of both pulses will be approximately equal for all detector voltages in the ion chamber region, as well as all detector voltages outside the ion chamber region.

ANSWER: B.

TOPIC: 291002
KNOWLEDGE: K1.23 [2.8/2.9]
QID: B5307 (P5306)

Which one of the following types of radiation detectors is generally not used for measuring a high-intensity beta and gamma radiation field because of a relatively long detector recovery time, or dead time, following each ionization event.

A. Geiger-Mueller

B. Ion chamber

C. Proportional

D. Scintillation

ANSWER: A.

TOPIC: 291002
KNOWLEDGE: K1.23 [2.8/2.9]
QID: B6007 (P6006)

Which one of the following types of radiation detectors uses a gas volume for radiation detection and will typically produce the weakest output signal if all of the detectors are placed in the same gamma radiation field?

A. Geiger-Mueller

B. Ion chamber

C. Proportional counter

D. Scintillation

ANSWER: B.

TOPIC: 291002
KNOWLEDGE: K1.23 [2.8/2.9]
QID: B6206 (P6206)

Which one of the following types of radiation detectors is typically the least accurate in determining the dose rate to a human body from an unspecified source of radiation?

A. Geiger-Mueller

B. Ion chamber

C. Proportional counter

D. Scintillation

ANSWER: A.

TOPIC: 291002
KNOWLEDGE: K1.23 [2.8/2.9]
QID: B6407 (P6405)

A fission chamber neutron detector is located in a constant neutron radiation field and is initially operating in the proportional region. If the voltage applied to the detector is changed such that the detector operates in the ion chamber region, the rate of neutron interactions in the detector will _____; and the amplitude of each neutron-induced detector pulse will _____.

A. increase; increase

B. decrease; decrease

C. remain the same; increase

D. remain the same; decrease

ANSWER: D.

TOPIC: 291002
KNOWLEDGE: K1.23 [2.8/2.9]
QID: B6507 (P6505)

Which one of the following describes the positive space charge effect associated with a gas-filled radiation detector?

A. Multiple detector pulses result from a single ionization event because positive ions form a cloud around the negative electrode, which increases the electric field strength, thereby initiating secondary ionizations.

B. Multiple detector pulses result from a single ionization event because positive ions form a cloud around the positive electrode, which increases the electric field strength, thereby initiating secondary ionizations.

C. The pulse amplitude resulting from an ionization event is reduced because positive ions form a cloud around the negative electrode, which reduces the electric field strength, thereby limiting secondary ionizations.

D. The pulse amplitude resulting from an ionization event is reduced because positive ions form a cloud around the positive electrode, which reduces the electric field strength, thereby limiting secondary ionizations.

ANSWER: D.

TOPIC: 291002
KNOWLEDGE: K1.23 [2.8/2.9]
QID: B6906 (P6906)

In which usable region(s) of the gas-filled detector ionization curve is the pulse height resulting from the detection of a 1 MeV beta particle the same as a 5 MeV alpha particle?

A. Geiger-Mueller only.

B. Geiger-Mueller and Ionization Chamber.

C. Proportional only.

D. Proportional and Ionization Chamber.

ANSWER: A.

TOPIC: 291002
KNOWLEDGE: K1.23 [2.8/2.9]
QID: B7207 (P7206)

Which one of the following personal radiation monitoring devices can be charged with DC voltage to "zero" the device prior to use?

A. Film badge

B. Alarming dosimeter

C. Thermoluminescent dosimeter

D. Self-reading pocket dosimeter

ANSWER: D.

TOPIC: 291002
KNOWLEDGE: K1.24 [3.1/3.2]
QID: B214 (P216)

Which one of the following describes a characteristic of a self-reading pocket dosimeter (SRPD)?

A. The output of an SRPD is a dose rate in mR/hr.

B. SRPDs are primarily sensitive to beta radiation.

C. SRPD readings must be considered inaccurate when they are dropped.

D. SRPDs hold their charge indefinitely when removed from a radiation field.

ANSWER: C.

TOPIC: 291002
KNOWLEDGE: K1.24 [3.1/3.2]
QID: B5707 (P5706)

Which one of the following describes a characteristic of a self-reading pocket dosimeter?

A. Provides dose rate indication in mR/hr.

B. More sensitive to gamma radiation than beta radiation.

C. Contains crystals that luminesce when exposed to ionizing radiation.

D. Can be stored as an accurate record of lifetime radiation exposure.

ANSWER: B.

TOPIC: 291002
KNOWLEDGE: K1.24 [3.1/3.2]
QID: B6807 (P6806)

A nuclear plant worker normally wears a thermoluminescent dosimeter (TLD) or similar device for measuring radiation exposure. When a self-reading pocket dosimeter (SRPD) is also required, where will the SRPD be worn and why?

A. Below the waist near the TLD to measure radiation from the same source(s).

B. Below the waist away from the TLD to measure radiation from different source(s).

C. Above the waist near the TLD to measure radiation from the same source(s).

D. Above the waist away from the TLD to measure radiation from different source(s).

ANSWER: C.

TOPIC: 291003
KNOWLEDGE: K1.01 [3.5/3.7]
QID: B15

The difference between the setpoint and the measured parameter in an automatic flow controller is called...

A. gain.

B. bias.

C. error.

D. feedback.

ANSWER: C.

TOPIC: 291003
KNOWLEDGE: K1.01 [3.5/3.7]
QID: B215 (P217)

The range of values around the setpoint of a measured variable where <u>no</u> <u>action</u> occurs in an automatic flow controller is called...

A. deviation.

B. error.

C. deadband.

D. bias.

ANSWER: C.

TOPIC: 291003
KNOWLEDGE: K1.01 [3.5/3.7]
QID: B715 (P1615)

An automatic flow controller is being used to position a valve in a cooling water system. A signal that is proportional to valve position is received by the controller. This signal is referred to as...

A. gain.

B. bias.

C. feedback.

D. error.

ANSWER: C.

TOPIC: 291003
KNOWLEDGE: K1.01 [3.5/3.7]
QID: B1414 (P17)

The difference between the setpoint in an automatic controller and the steady-state value of the controlled parameter is called...

A. offset.

B. gain.

C. deadband.

D. feedback.

ANSWER: A.

TOPIC: 291003
KNOWLEDGE: K1.01 [3.5/3.7]
QID: B1516 (P1219)

The level in a tank is controlled by an automatic level controller. Level is initially at 50 percent when the tank develops a leak. When level decreases to 45 percent the level controller opens a makeup supply valve. After a few minutes, level is 55 percent and the makeup valve closes. With the leak still in progress, level continuously oscillates between 45 percent and 55 percent as the makeup valve opens and closes.

The controller in this system uses primarily _____ control.

A. bistable

B. proportional

C. integral

D. derivative

ANSWER: A.

TOPIC: 291003
KNOWLEDGE: K1.01 [3.5/3.7]
QID: B1616 (P1518)

Which one of the following terms is used to describe the delay between a process parameter change and the sensing of that change by the process controller?

A. Offset

B. Gain

C. Dead time

D. Time constant

ANSWER: C.

TOPIC: 291003
KNOWLEDGE: K1.01 [3.5/3.7]
QID: B1817 (P715)

An automatic flow controller is being used to position a valve in a cooling water system. The controller develops a flow error signal and then increases the magnitude of the signal to drive the valve operator.

The factor by which the magnitude of the flow error signal is increased is referred to as...

A. bias.

B. gain.

C. feedback.

D. offset.

ANSWER: B.

TOPIC: 291003
KNOWLEDGE: K1.01 [3.5/3.7]
QID: B2115 (P918)

In a proportional controller, the term "offset" refers to the difference between the...

A. control point and setpoint.

B. control point and proportional band.

C. deadband and setpoint.

D. deadband and proportional band.

ANSWER: A.

TOPIC: 291003
KNOWLEDGE: K1.01 [3.5/3.7]
QID: B3715 (P3715)

A flow controller has proportional, integral, and derivative control features. Which one of the following lists the effect on the control features when the controller is switched from the automatic mode to the manual mode?

A. Only the derivative feature will be lost.

B. Only the integral and derivative features will be lost.

C. All proportional, integral, and derivative features will be lost.

D. All control features will continue to influence the controller output.

ANSWER: C.

TOPIC: 291003
KNOWLEDGE: K1.01 [3.5/3.7]
QID: B5608 (P5607)

Consider a direct-acting proportional flow controller that is maintaining flow rate at a value that is offset from the controller setpoint. If the controller's gain is increased, the controller's offset will _____; and the controller's proportional band will _____.

A. decrease; decrease

B. decrease; increase

C. increase; decrease

D. increase; increase

ANSWER: A.

TOPIC: 291003
KNOWLEDGE: K1.01 [3.5/3.7]
QID: B6108 (P6107)

Consider a direct-acting proportional flow controller that is maintaining flow rate at a value that is offset from the controller setpoint. If the controller's gain is decreased, the controller's offset will _____; and the controller's proportional band will _____.

A. decrease; decrease

B. decrease; increase

C. increase; decrease

D. increase; increase

ANSWER: D.

TOPIC: 291003
KNOWLEDGE: K1.02 [3.5/3.6]
QID: B3115 (P218)

An emergency diesel generator (DG) is operating as the only power source connected to an emergency bus. The governor of the DG is directly sensing DG _____ and will directly adjust DG _____ flow to maintain a relatively constant DG frequency.

A. speed; air

B. speed; fuel

C. load; air

D. load; fuel

ANSWER: B.

TOPIC: 291003
KNOWLEDGE: K1.03 [3.3/3.4]
QID: B1317 (P818)

The water level in a tank is being controlled by an automatic level controller and is initially at the controller setpoint. A drain valve is then opened, causing tank level to decrease. The decreasing level causes the controller to begin to open a makeup water supply valve. After a few minutes, a new steady-state tank level below the original level is established, with the supply rate equal to the drain rate.

The controller in this system uses _____ control.

A. proportional, integral, and derivative

B. proportional and integral only

C. proportional only

D. bistable

ANSWER: C.

TOPIC: 291003
KNOWLEDGE: K1.03 [3.3/3.4]
QID: B2215 (P1417)

Which one of the following controller types is designed to control the measured parameter at the controller setpoint?

A. Integral

B. Proportional

C. On-Off

D. Derivative

ANSWER: A.

TOPIC: 291003
KNOWLEDGE: K1.03 [3.3/3.4]
QID: B2315 (P2319)

The level in a drain collection tank is being controlled by an automatic level controller and is initially stable at the controller setpoint. Flow rate into the tank increases, causing tank level to increase. The increasing level causes the controller to throttle open a tank drain valve. After a few minutes, a new stable tank level above the original level is established, with the drain flow rate equal to the supply flow rate.

The controller in this system uses _____ control.

A. on-off

B. proportional

C. proportional plus integral

D. proportional plus integral plus derivative

ANSWER: B.

TOPIC: 291003
KNOWLEDGE: K1.03 [3.3/3.4]
QID: B2415 (P2419)

The level in a drain collection tank is being controlled by an automatic level controller and level is initially at the controller setpoint. Flow rate into the tank causes tank level to increase. The increasing level causes the controller to fully open a tank drain valve. When level decreases below the setpoint, the controller closes the drain valve. Tank level continues to be controlled in this manner within a narrow band above and below the setpoint.

The controller in this system uses _____ control.

A. on-off

B. proportional

C. proportional plus integral

D. proportional plus integral plus derivative

ANSWER: A.

TOPIC: 291003
KNOWLEDGE: K1.03 [3.3/3.4]
QID: B2815 (P2819)

The water level in a water collection tank is being controlled by an automatic level controller that positions a tank drain valve. Tank water level is initially stable at the controller setpoint. Flow rate into the tank increases, slowly at first, and then faster until a stable flow rate is attained.

When tank level increases, the controller begins to open the tank drain valve farther. The level controller output signal increases both as the tank level increases and as the rate of tank level change quickens. After a few minutes, a new stable tank level above the original level is established, with the drain flow rate equal to the supply flow rate.

The controller in this system uses _____ control.

A. proportional only

B. proportional plus derivative

C. proportional plus integral

D. proportional plus integral plus derivative

ANSWER: B.

TOPIC: 291003
KNOWLEDGE: K1.03 [3.3/3.4]
QID: B3116 (P2919)

The level in a drain collection tank is being controlled by an automatic level controller and is initially stable at the controller setpoint. Flow rate into the tank increases, slowly at first, and then faster until a stable higher flow rate is attained.

As tank level begins to increase, the level controller slowly opens a tank drain valve. The level controller output signal increases both as the tank level increases and as the rate of tank level change quickens. After a few minutes, tank level returns to and remains at the original level with the drain flow rate equal to the supply flow rate.

The controller in this system uses _____ control.

A. proportional only

B. proportional plus derivative only

C. proportional plus integral only

D. proportional plus integral plus derivative

ANSWER: D.

TOPIC: 291003
KNOWLEDGE: K1.03 [3.3/3.4]
QID: B3316 (P3319)

Refer to the drawing of a water storage tank with a level control system (see figure below). The tank water level is being automatically controlled at 50 percent by a proportional-integral (PI) controller that positions the drain valve. Tank water level is currently stable with 500 gpm entering the tank and the drain valve 50 percent open.

Tank inlet flow rate suddenly increases to 700 gpm and remains constant. When tank water level stabilizes, level will be _____; and the drain valve position will be _____.

A. higher than 50 percent; more open

B. higher than 50 percent; the same

C. 50 percent; more open

D. 50 percent; the same

ANSWER: C.

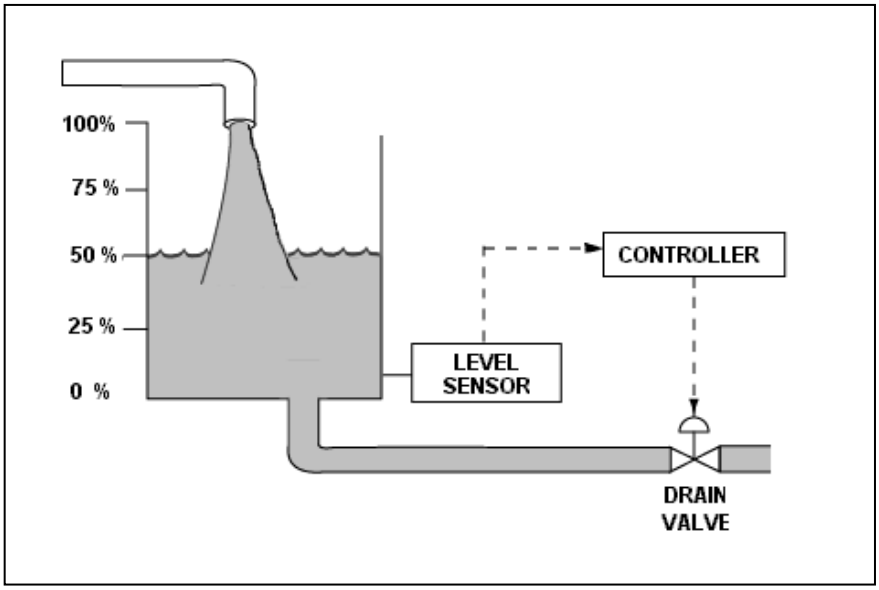

TOPIC: 291003
KNOWLEDGE: K1.03 [3.3/3.4]
QID: B3415 (P3419)

Refer to the drawing of a water storage tank with a level control system (see figure below). The tank water level is being automatically controlled at 50 percent by a proportional-integral (PI) controller that positions the drain valve. Tank water level is currently stable with 500 gpm entering the tank and the drain valve 50 percent open.

The tank suddenly develops a constant 200 gpm leak, while the input flow rate remains constant at 500 gpm. When tank water level stabilizes, level will be _____; and the drain valve position will be _____.

A. 50 percent; more open

B. 50 percent; more closed

C. lower than 50 percent; more open

D. lower than 50 percent; more closed

ANSWER: B.

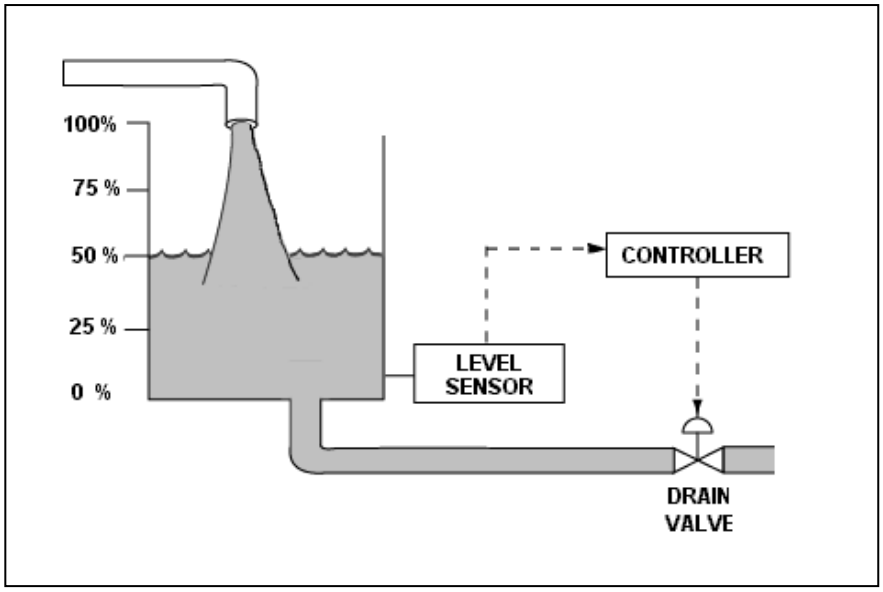

TOPIC: 291003
KNOWLEDGE: K1.03 [3.3/3.4]
QID: B3515 (P3519)

Refer to the drawing of a water storage tank with a level control system (see figure below).

The tank water level is being automatically controlled by a proportional-only controller with a setpoint of 50 percent. Tank water level is currently stable at 50 percent with 500 gpm entering the tank and the drain valve 50 percent open.

The tank suddenly develops a 200 gpm leak, while the input flow rate remains constant at 500 gpm. After the tank water level stabilizes, level will be _____; and the drain valve position will be _____.

A. 50 percent; more than 50 percent open

B. 50 percent; less than 50 percent open

C. below 50 percent; more than 50 percent open

D. below 50 percent; less than 50 percent open

ANSWER: D.

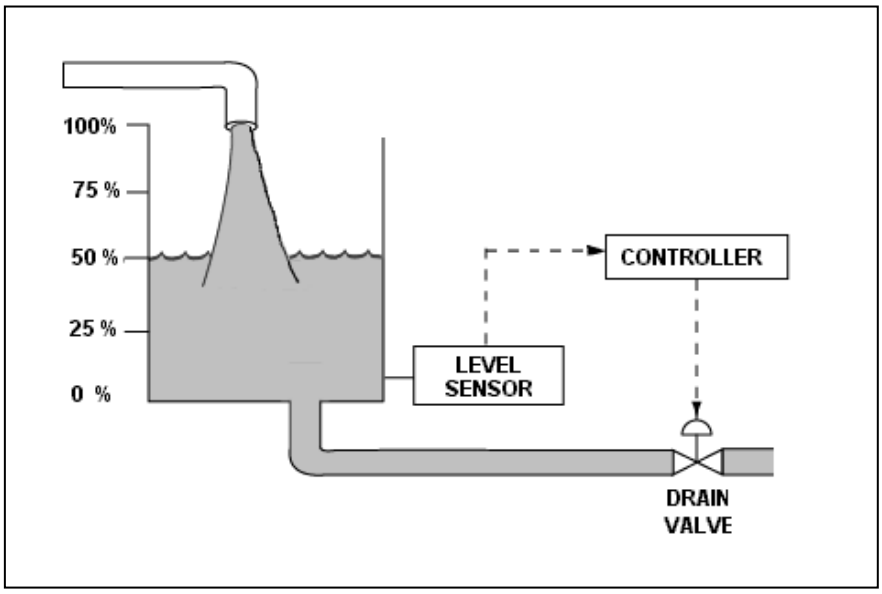

TOPIC: 291003
KNOWLEDGE: K1.03 [3.3/3.4]
QID: B3616 (P3617)

Refer to the drawing of a water storage tank with an automatic level control system (see figure below).

Given:

- The drain valve fails open on loss of controller output signal.
- The level sensor output signal changes directly with tank water level.

For proper automatic control of tank water level, the controller must be _____; and the control loop must be _____.

A. direct-acting; open

B. direct-acting; closed

C. reverse-acting; open

D. reverse-acting; closed

ANSWER: D.

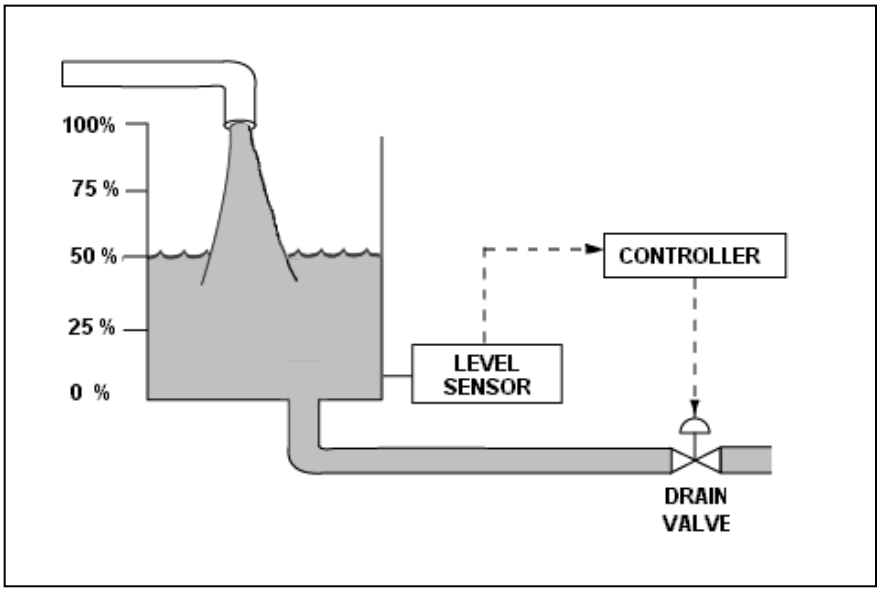

TOPIC: 291003
KNOWLEDGE: K1.03 [3.3/3.4]
QID: B3816 (P3818)

Refer to the drawing of a water storage tank with a level control system (see figure below).

The tank water level is being automatically controlled by a proportional-only controller with a level setpoint of 50 percent. Tank water level is currently stable at 50 percent with 500 gpm entering the tank and the drain valve 50 percent open.

The tank input flow rate suddenly increases to 700 gpm. After the tank water level stabilizes, level will be _____; and the drain valve position will be _____.

A. 50 percent; more than 50 percent open

B. 50 percent; 50 percent open

C. above 50 percent; more than 50 percent open

D. above 50 percent; 50 percent open

ANSWER: C.

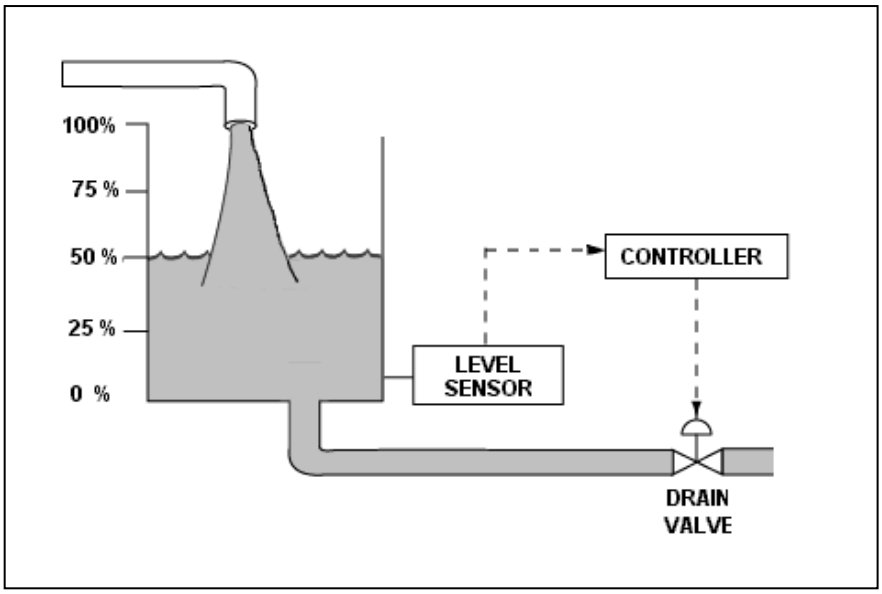

TOPIC: 291003
KNOWLEDGE: K1.03 [3.3/3.4]
QID: B4108 (P4109)

Refer to the drawing of a water storage tank with an automatic level control system (see figure below).

Given:

- The drain valve fails closed on loss of controller output signal.
- The level sensor output signal changes directly with tank water level.

For proper automatic control of tank water level, the controller must be _____; and the control loop must be _____.

A. direct-acting; open

B. direct-acting; closed

C. reverse-acting; open

D. reverse-acting; closed

ANSWER: B.

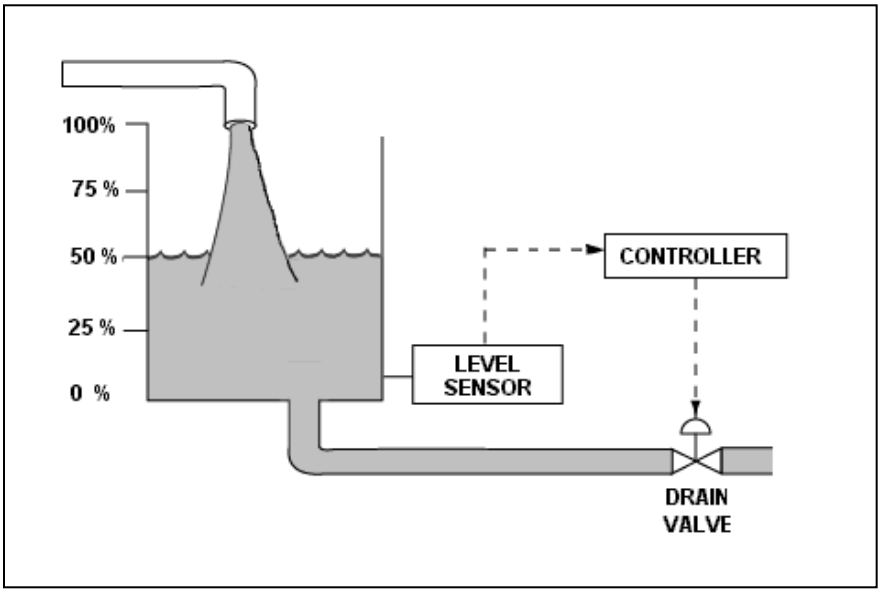

TOPIC: 291003
KNOWLEDGE: K1.03 [3.3/3.4]
QID: B4408 (P4408)

The water level in a water storage tank is being controlled by an automatic bistable level controller. If water level increases to 70 percent, the controller bistable turns on to open a tank drain valve. When water level decreases to 60 percent, the controller bistable turns off to close the drain valve.

Which one of the following bistable symbols indicates the characteristics of the bistable used in the level controller?

A. 1.

B. 2.

C. 3.

D. 4.

ANSWER: D.

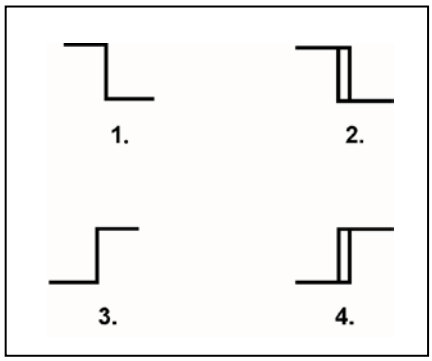

TOPIC: 291003
KNOWLEDGE: K1.03 [3.3/3.4]
QID: B4708 (P4707)

Refer to the valve controller logic diagram (see figure below).

Which one of the following combinations of inputs will result in the valve receiving an OPEN signal?

	INPUTS			
	1.	2.	3.	4.
A.	On	Off	Off	On
B.	Off	On	On	Off
C.	On	Off	On	Off
D.	Off	On	Off	On

ANSWER: B.

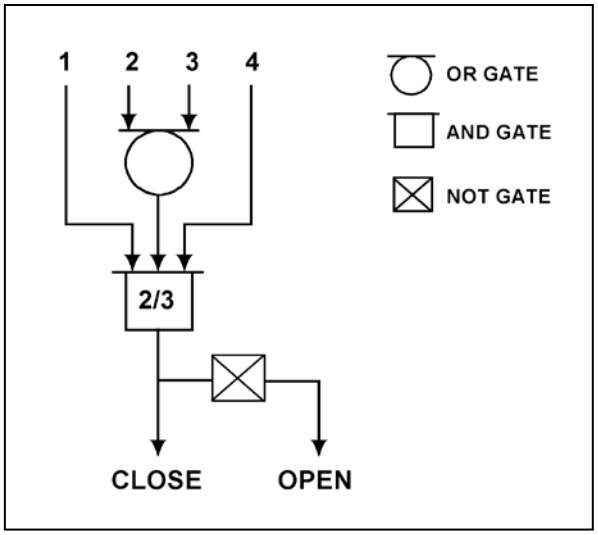

TOPIC: 291003
KNOWLEDGE: K1.03 [3.3/3.4]
QID: B4908 (P4909)

The water level in a water storage tank is being controlled by an automatic bistable level controller. If water level increases to 70 percent, the controller bistable turns off to open a tank drain valve. When water level decreases to 60 percent, the controller bistable turns on to close the drain valve.

Which one of the following bistable symbols indicates the characteristics of the bistable used in the level controller?

A. 1.

B. 2.

C. 3.

D. 4.

ANSWER: B.

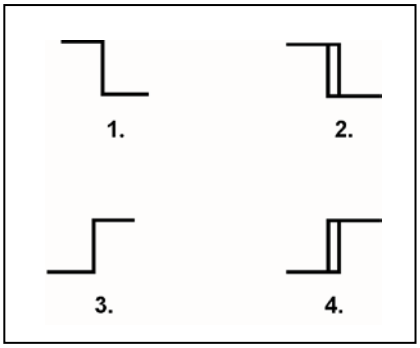

TOPIC: 291003
KNOWLEDGE: K1.03 [3.3/3.4]
QID: B5009 (P5009)

Refer to the valve controller logic diagram (see figure below).

Which one of the following combinations of inputs will result in the valve receiving a CLOSE signal?

	INPUTS			
	1.	2.	3.	4.
A.	On	On	Off	Off
B.	Off	Off	On	Off
C.	On	Off	Off	On
D.	On	On	On	Off

ANSWER: B.

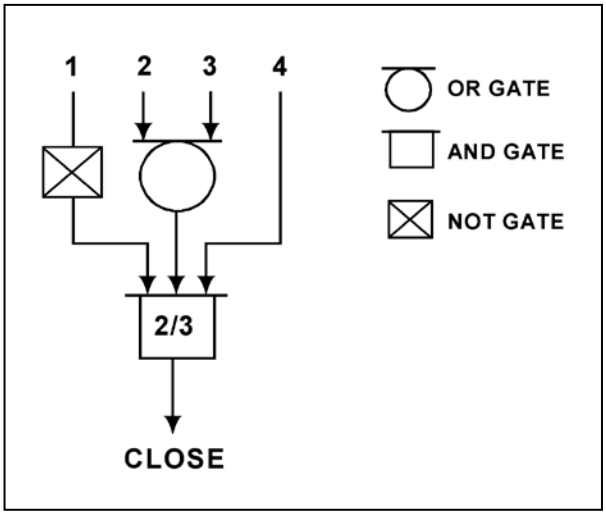

TOPIC: 291003
KNOWLEDGE: K1.03 [3.3/3.4]
QID: B5408 (P5409)

Refer to the valve controller logic diagram (see figure below).

Which one of the following combinations of inputs will result in the valve receiving an OPEN signal?

	INPUTS			
	1.	2.	3.	4.
A.	On	Off	On	On
B.	Off	On	Off	Off
C.	On	Off	Off	On
D.	Off	On	On	Off

ANSWER: B.

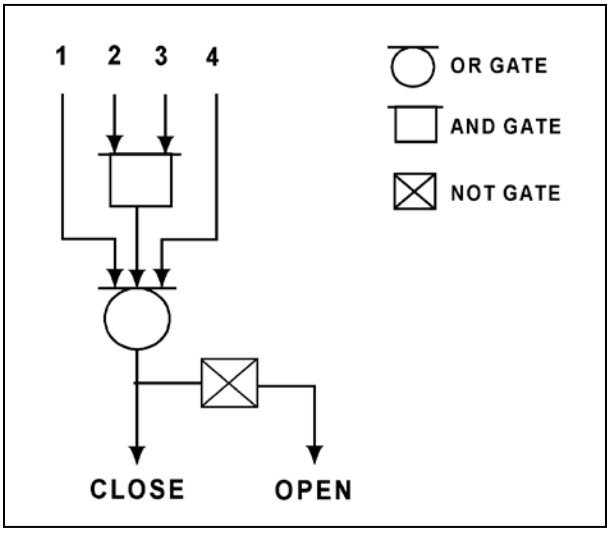

TOPIC: 291003
KNOWLEDGE: K1.03 [3.3/3.4]
QID: B5808 (P5809)

A reverse-acting proportional controller will be used to maintain level in a water storage tank by positioning an air-operated makeup water flow control valve.

Which of the following flow control valves will be compatible with the controller in this application?

A. A and B

B. B and C

C. C and D

D. D and A

ANSWER: B.

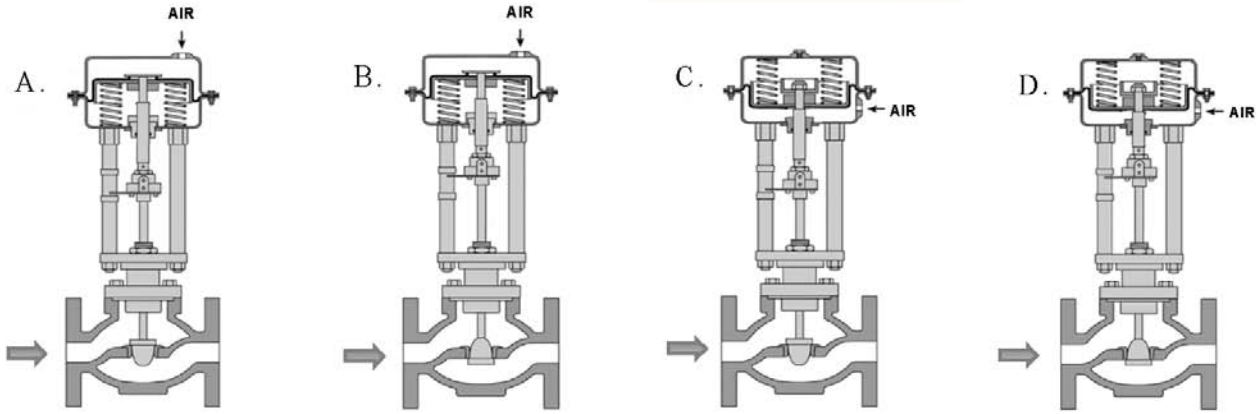

TOPIC: 291003
KNOWLEDGE: K1.03 [3.3/3.4]
QID: B6309 (P6309)

Given:

- A direct-acting proportional pneumatic controller will be used to maintain level in a condensate collection tank by positioning an air-operated flow control valve in the tank's drain line.
- The controller's input will vary directly with tank condensate level.

Which of the flow control valves shown below will be compatible with the controller in the above application?

A. A and B

B. B and C

C. C and D

D. D and A

ANSWER: B.

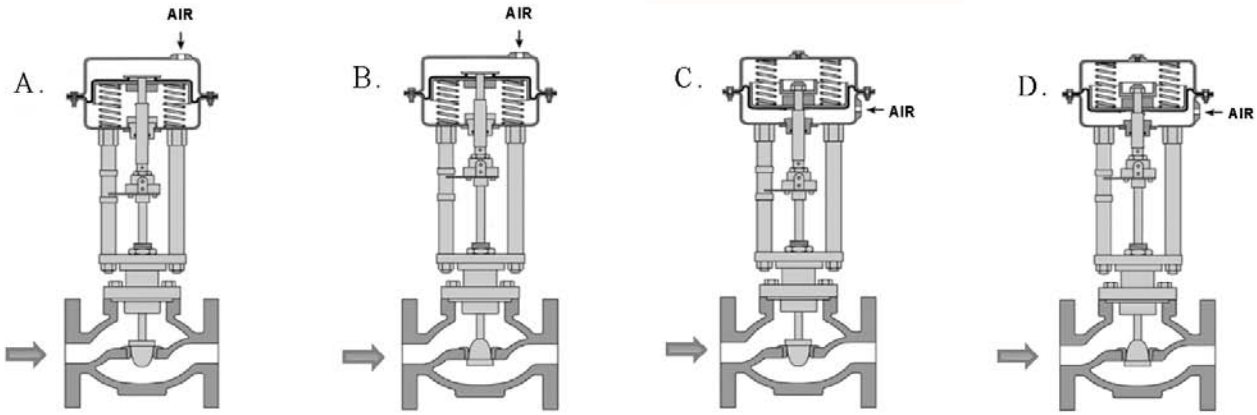

TOPIC: 291003
KNOWLEDGE: K1.03 [3.3/3.4]
QID: B6808 (P6809)

Refer to the logic diagram for a valve controller (see figure below).

Which one of the following combinations of inputs will result in the valve receiving a CLOSE signal?

	INPUTS			
	1	2	3	4
A.	On	On	On	On
B.	Off	On	On	On
C.	On	Off	Off	Off
D.	Off	On	On	Off

ANSWER: B.

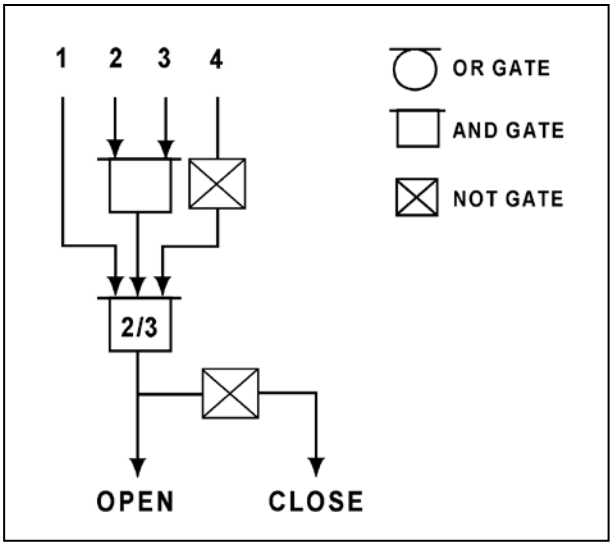

TOPIC: 291003
KNOWLEDGE: K1.03 [3.3/3.4]
QID: B7008 (P7007)

Refer to the drawing of a lube oil temperature control system (see figure below).

A direct-acting proportional temperature controller is being used to control the heat exchanger lube oil outlet temperature. When the lube oil outlet temperature matches the controller setpoint of 90°F, the controller output signal is 50 percent.

Current lube oil outlet temperature is stable at 100°F with the controller output signal at 70 percent.

What is the temperature proportional band for this controller?

A. 90°F to 140°F

B. 90°F to 115°F

C. 65°F to 140°F

D. 65°F to 115°F

ANSWER: D.

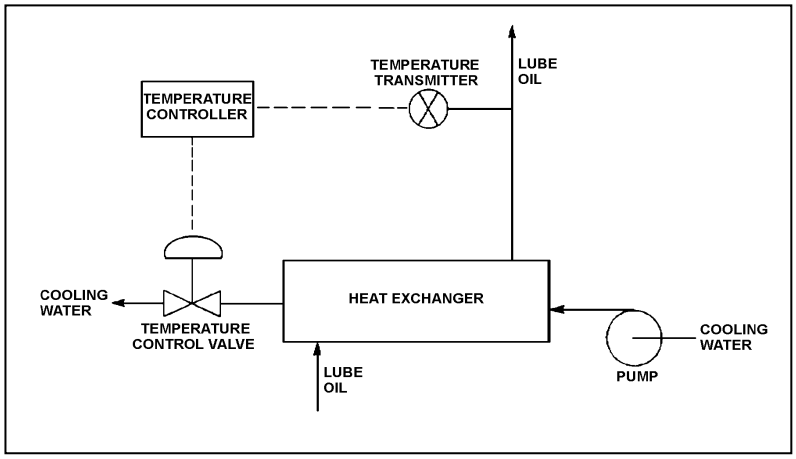

TOPIC: 291003
KNOWLEDGE: K1.03 [3.3/3.4]
QID: B7108 (P7109)

Given:

- A direct-acting proportional pneumatic controller will be used to maintain level in a water storage tank by positioning an air-operated flow control valve in the tank's makeup water supply line.
- The controller's input will vary directly with tank level.

Which of the flow control valves shown below will be compatible with the controller in the above application?

A. A and B

B. B and C

C. C and D

D. D and A

ANSWER: D.

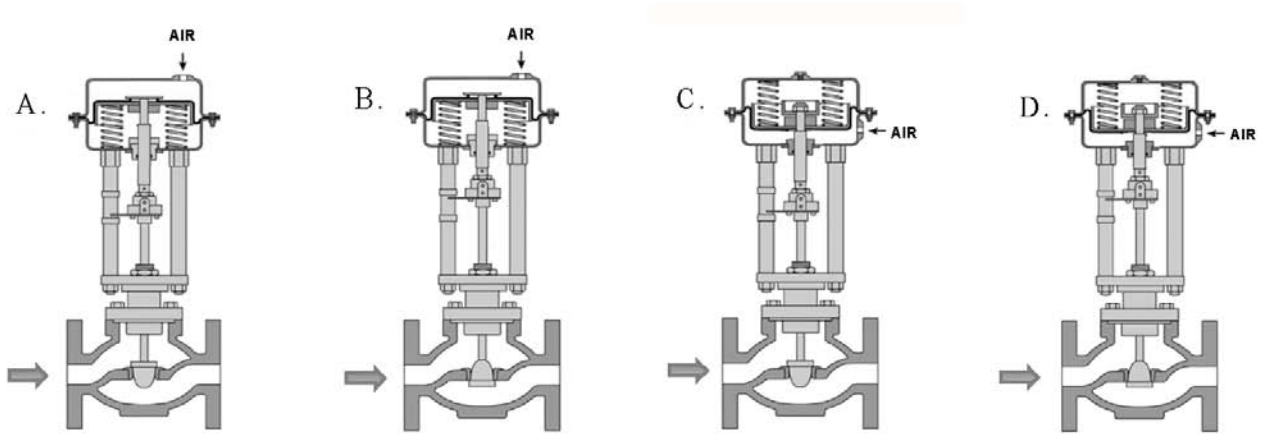

TOPIC: 291003
KNOWLEDGE: K1.03 [3.3/3.4]
QID: B7109 (P7108)

The level in a condensate collection tank is being controlled by an automatic level controller using proportional-only control. Initially the tank level is stable, but then the flow into the tank increases and stabilizes at a higher flow rate.

As tank level increases, the controller positions a drain valve more open than necessary to stabilize the level. As tank level decreases, the controller positions the drain valve more closed than necessary to stabilize the level. This cycle is repeated continuously, never reaching a stable tank level or drain valve position.

The excessive valve positioning described above could be caused by the controller's gain being too _____; or by the controller's proportional band being too _____.

A. low; wide

B. low; narrow

C. high; wide

D. high; narrow

ANSWER: D.

TOPIC: 291003
KNOWLEDGE: K1.03 [3.3/3.4]
QID: B7309 (P7309)

A proportional controller is being used to control the water level in a tank. When the tank water level matches the controller setpoint of 50 percent, the controller output signal is 50 percent.

Tank water level begins to rise and the controller stabilizes the water level at 60 percent, at which time the controller output signal is 90 percent.

What is the offset for this controller at the 60 percent tank water level?

A. 10 percent

B. 30 percent

C. 40 percent

D. 67 percent

ANSWER: A.

TOPIC: 291003
KNOWLEDGE: K1.04 [3.3/3.3]
QID: B316 (P319)

Which one of the following describes the response of a direct-acting proportional-integral controller, operating in automatic mode, to an increase in the controlled parameter above the controller setpoint?

A. The controller will develop an output signal that continues to increase until the controlled parameter equals the controller setpoint, at which time the output signal stops increasing.

B. The controller will develop an output signal that will remain directly proportional to the difference between the controlled parameter and the controller setpoint.

C. The controller will develop an output signal that continues to increase until the controlled parameter equals the controller setpoint, at which time the output signal becomes zero.

D. The controller will develop an output signal that will remain directly proportional to the rate of change of the controlled parameter.

ANSWER: A.

TOPIC: 291003
KNOWLEDGE: K1.04 [3.3/3.3]
QID: B516 (P617)

Refer to the drawing of a lube oil temperature control system (see figure below).

If the temperature transmitter fails high (high temperature output signal), the temperature controller will position the temperature control valve more _____, causing the actual heat exchanger lube oil outlet temperature to _____.

A. open; decrease

B. open; increase

C. closed; decrease

D. closed; increase

ANSWER: A.

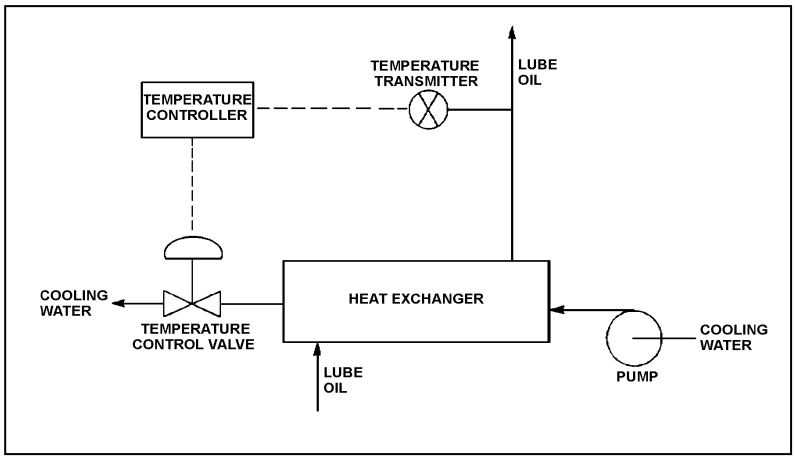

TOPIC: 291003
KNOWLEDGE: K1.04 [3.3/3.3]
QID: B917 (P1315)

Refer to the drawing of a lube oil temperature control system (see figure below).

If the temperature transmitter fails low (low temperature output signal), the temperature controller will position the temperature control valve in the _____ direction, which causes the actual heat exchanger lube oil outlet temperature to _____.

A. close; increase

B. close; decrease

C. open; increase

D. open; decrease

ANSWER: A.

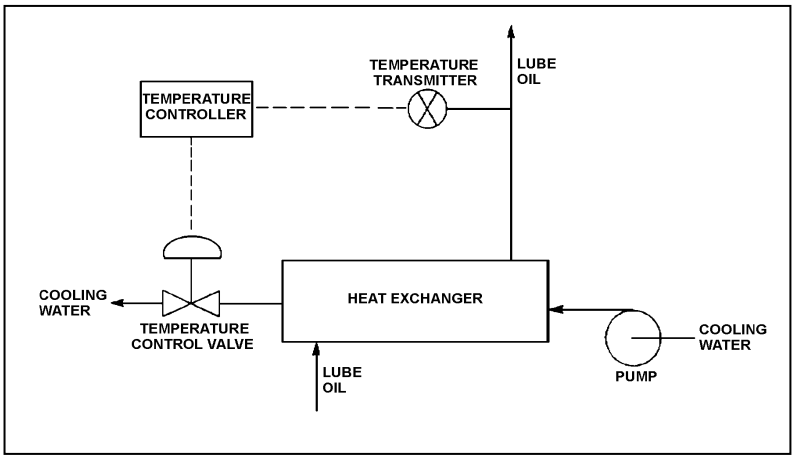

TOPIC: 291003
KNOWLEDGE: K1.04 [3.3/3.3]
QID: B1015 (P917)

A proportional-derivative controller senses an increase in the controlled parameter above the controller setpoint. The derivative function causes the controller output signal to...

A. increase until the controlled parameter equals the controller setpoint, at which time the output signal becomes constant.

B. remain directly proportional to the difference between the controlled parameter and the controller setpoint.

C. increase until the controlled parameter equals the controller setpoint, at which time the output signal becomes zero.

D. change at a rate that is directly proportional to the rate of change of the controlled parameter.

ANSWER: D.

TOPIC: 291003
KNOWLEDGE: K1.04 [3.3/3.3]
QID: B1914 (P1715)

Refer to the drawing of a lube oil temperature control system (see figure below).

Which one of the following describes the type of control used in the lube oil temperature control system?

A. Open loop, because lube oil temperature feedback is being provided to the controller from the lube oil temperature transmitter.

B. Open loop, because lube oil temperature is being controlled by positioning a flow control valve in a separate system.

C. Closed loop, because lube oil temperature feedback is being provided to the controller from the lube oil temperature transmitter.

D. Closed loop, because lube oil temperature is being controlled by positioning a flow control valve in a separate system.

ANSWER: C.

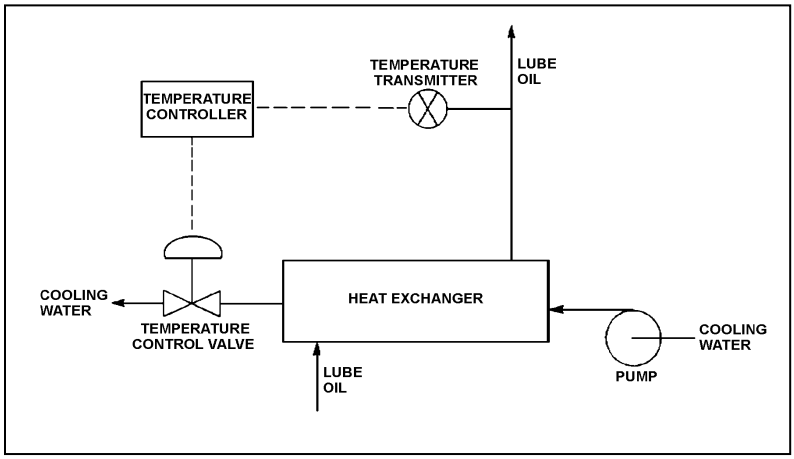

TOPIC: 291003
KNOWLEDGE: K1.04 [3.3/3.3]
QID: B1915 (P1016)

The level in a tank is controlled by an automatic control system. Level is initially at its setpoint. A drain valve is then opened, causing tank level to begin to decrease. The decreasing level causes the controller to begin to open a makeup supply valve. After a few minutes, with the drain valve still open, level is again constant at the setpoint.

The controller in this system uses primarily _____ control.

A. integral

B. on-off

C. derivative

D. proportional

ANSWER: A.

TOPIC: 291003
KNOWLEDGE: K1.04 [3.3/3.3]
QID: B2016 (P2016)

Refer to the drawing of a lube oil temperature control system (see figure below). The temperature control valve is currently 50 percent open.

If the cooling water inlet temperature decreases, the temperature controller will position the temperature control valve more _____, causing cooling water differential temperature through the heat exchanger to _____.

A. closed; increase

B. closed; decrease

C. open; increase

D. open; decrease

ANSWER: A.

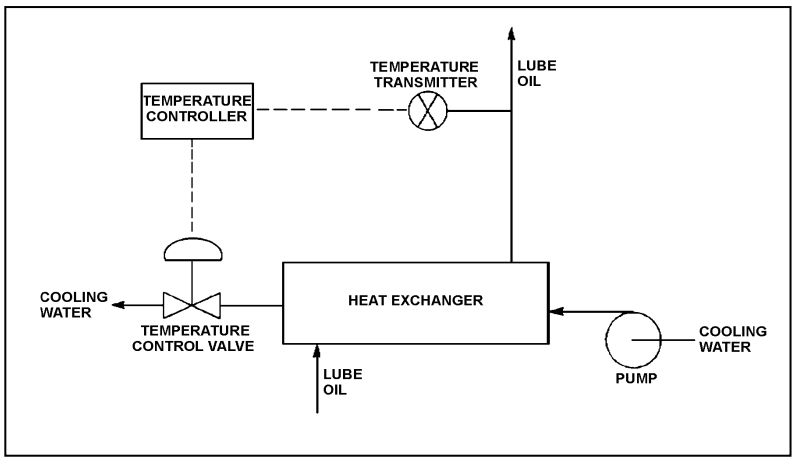

TOPIC: 291003
KNOWLEDGE: K1.04 [3.3/3.3]
QID: B2515 (P2519)

The temperature of the water in a small outside storage tank is controlled by a set of heaters submerged in the tank. The heaters energize at a water temperature of 40°F and deenergize at 48°F. When energized, the heaters produce a constant thermal output.

Which one of the following types of control devices is used in the heater control circuit to produce these characteristics?

A. Bistable

B. Proportional

C. Proportional plus integral

D. Proportional plus derivative

ANSWER: A.

TOPIC: 291003
KNOWLEDGE: K1.04 [3.3/3.3]
QID: B3016 (P3015)

Refer to the drawing of a pressure bistable in an alarm circuit (see figure below).

The orientation of the bistable symbol indicates the characteristics of the bistable, as is normal for a control circuit diagram. The bistable turns on to actuate an alarm at a system pressure of 100 psig. The bistable has a 5 psig deadband, or neutral zone.

If current system pressure is 90 psig, which one of the following describes the alarm circuit response as system pressure slowly increases to 110 psig?

A. The alarm is currently actuated and will turn off at 95 psig.

B. The alarm will actuate at 100 psig and will <u>not</u> turn off.

C. The alarm is currently actuated and will turn off at 105 psig.

D. The alarm will actuate at 100 psig and will turn off at 105 psig.

ANSWER: C.

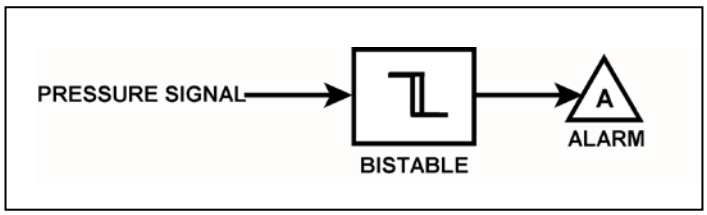

TOPIC: 291003
KNOWLEDGE: K1.04 [3.3/3.3]
QID: B3216 (P3215)

Refer to the drawing of a pressure bistable in an alarm circuit (see figure below).

The orientation of the bistable symbol indicates the characteristics of the bistable, as is normal for a control circuit diagram. The bistable turns on to actuate an alarm at a system pressure of 100 psig. The bistable has a 5 psig deadband, or neutral zone.

If system pressure is currently 90 psig, which one of the following describes the alarm circuit response as system pressure slowly increases to 110 psig?

A. The alarm is currently actuated and will turn off at 95 psig.

B. The alarm will actuate at 100 psig and will not turn off.

C. The alarm is currently actuated and will turn off at 105 psig.

D. The alarm will actuate at 100 psig and will turn off at 105 psig.

ANSWER: B.

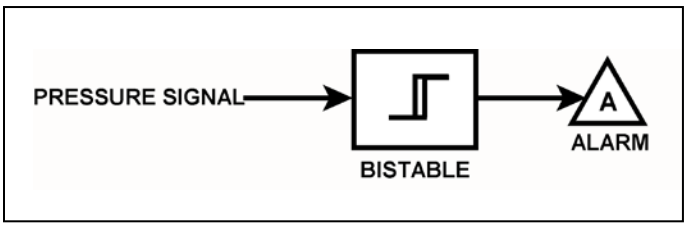

TOPIC: 291003
KNOWLEDGE: K1.04 [3.3/3.3]
QID: B3817 (P3816)

Refer to the drawing of four bistable symbols (see figure below).

A temperature controller uses a bistable that turns on to actuate a warning light when the controlled temperature reaches a low setpoint. The warning light extinguishes immediately after the temperature increases above the low setpoint.

Which one of the following bistable symbols indicates the characteristics of the bistable?

A. 1.

B. 2.

C. 3.

D. 4.

ANSWER: A.

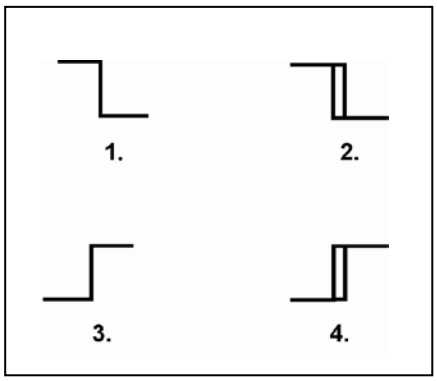

TOPIC: 291003
KNOWLEDGE: K1.04 [3.3/3.3]
QID: B3909 (P3516)

Refer to the drawing of a pressure bistable in an alarm circuit (see figure below).

The orientation of the bistable symbol indicates the characteristics of the bistable, as is normal for a control circuit diagram. The bistable turns on to actuate an alarm at a system pressure of 100 psig. The bistable has a 5 psig deadband, or neutral zone.

If system pressure is currently 110 psig, which one of the following describes the alarm circuit response as system pressure slowly decreases to 90 psig?

A. The alarm will actuate at 100 psig and will not turn off.

B. The alarm will actuate at 100 psig and will turn off at 95 psig.

C. The alarm is currently actuated and will not turn off.

D. The alarm is currently actuated and will turn off at 95 psig.

ANSWER: A.

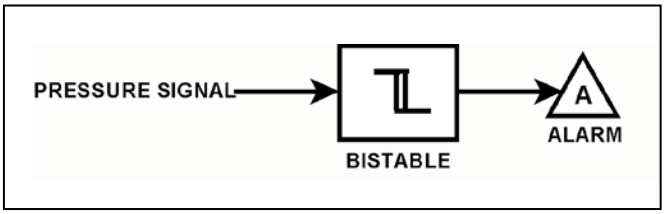

TOPIC: 291003
KNOWLEDGE: K1.04 [3.3/3.3]
QID: B4509 (P4508)

Refer to the drawing of four bistable symbols (see figure below).

A temperature controller uses a bistable that turns on to actuate a warning light when the controlled temperature reaches a high setpoint. The bistable turns off to extinguish the warning light when the temperature decreases to 5°F below the high setpoint.

Which one of the following bistable symbols indicates the characteristics of the bistable?

A. 1.

B. 2.

C. 3.

D. 4.

ANSWER: D.

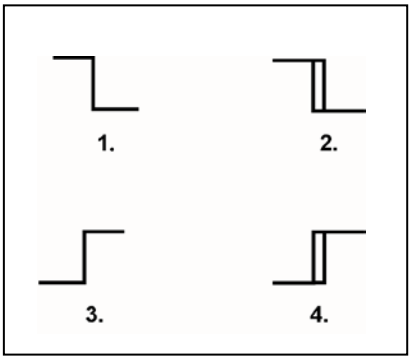

TOPIC: 291003
KNOWLEDGE: K1.04 [3.3/3.3]
QID: B4609 (P4607)

Refer to the drawing of a temperature bistable in a bistable alarm circuit (see figure below).

The orientation of the bistable symbol indicates the characteristics of the bistable, as is normal for a control circuit diagram. The bistable turns on to actuate an alarm at a temperature of 130°F. The bistable has a 5°F deadband, or neutral zone.

If the current temperature is 150°F, which one of the following describes the alarm circuit response as temperature slowly decreases to 110°F?

A. The alarm is currently actuated and will not turn off.

B. The alarm will actuate at 130°F and will not turn off.

C. The alarm is currently actuated and will turn off at 125°F.

D. The alarm will actuate at 130°F and will turn off at 125°F.

ANSWER: B.

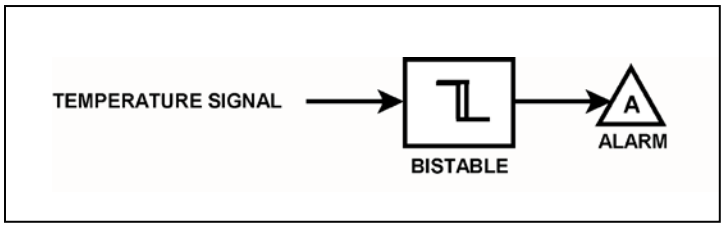

TOPIC: 291003
KNOWLEDGE: K1.04 [3.3/3.3]
QID: B5109 (P5107)

Refer to the drawing of a lube oil temperature control system (see figure below).

The temperature controller is a direct-acting proportional controller with a gain of 1.0. Which one of the following describes the effect of changing the gain to 2.0?

A. Half the temperature deviation from setpoint will produce a given controller output.

B. Twice the temperature deviation from setpoint will produce a given controller output.

C. The temperature control valve will move half as far for a given change in controller output.

D. The temperature control valve will move twice as far for a given change in controller output.

ANSWER: A.

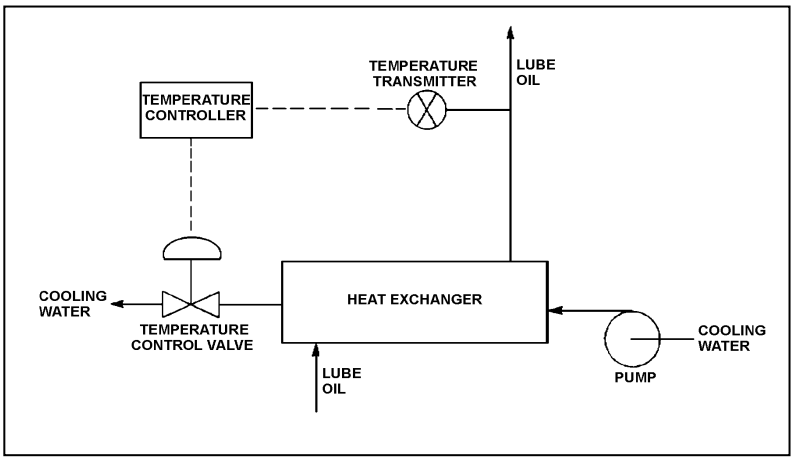

TOPIC: 291003
KNOWLEDGE: K1.04 [3.3/3.3]
QID: B5309 (P5308)

A direct-acting proportional controller is being used to control the temperature of lube oil exiting a heat exchanger. The controller's proportional band is 70°F to 120°F.

Which one of the following will be the controller's output percentage when the measured lube oil temperature is 83°F?

A. 13 percent

B. 26 percent

C. 37 percent

D. 74 percent

ANSWER: B.

TOPIC: 291003
KNOWLEDGE: K1.04 [3.3/3.3]
QID: B5509 (P5508)

A reverse-acting proportional controller is being used to control the temperature of lube oil exiting a heat exchanger. The controller's proportional band is 70°F to 120°F.

Which one of the following will be the controller's output percentage when the measured lube oil temperature is 83°F?

A. 13 percent

B. 26 percent

C. 74 percent

D. 87 percent

ANSWER: C.

TOPIC: 291003
KNOWLEDGE: K1.04 [3.3/3.3]
QID: B5609 (P5608)

The temperature of the water in a storage tank is monitored by a bistable alarm circuit. If water temperature decreases to 50°F, a bistable turns on to actuate an alarm indicator. As soon as the water temperature exceeds 50°F, the bistable turns off to clear the alarm.

Which one of the following bistable symbols indicates the characteristics of the bistable used in the alarm circuit?

A. 1.

B. 2.

C. 3.

D. 4.

ANSWER: A.

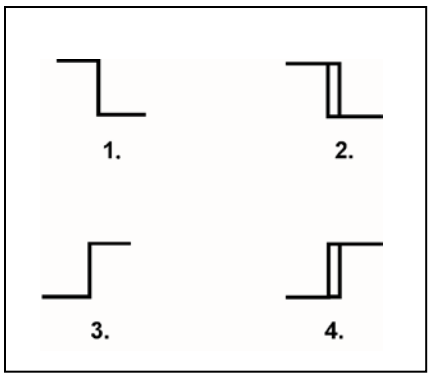

TOPIC: 291003
KNOWLEDGE: K1.04 [3.3/3.3]
QID: B5709 (P5708)

Refer to the drawing of a lube oil temperature control system (see figure below).

The temperature controller is a direct-acting proportional controller with a gain of 1.0. Which one of the following describes the effect of changing the gain to 2.0?

A. Increases the range of lube oil temperatures that produces a proportional controller response.

B. Increases the change in valve position resulting from a given change in lube oil temperature.

C. Increases the difference between the controller setpoint and the lube oil temperature at steady-state conditions.

D. Increases the lube oil temperature deviation from setpoint required to produce a given controller output.

ANSWER: B.

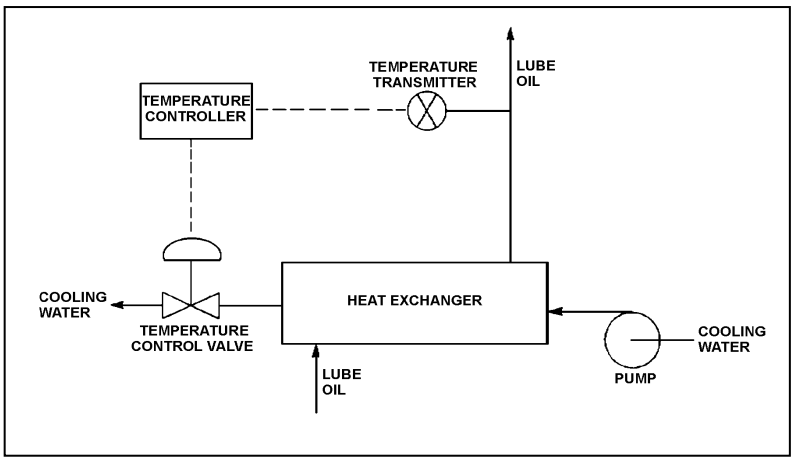

TOPIC: 291003
KNOWLEDGE: K1.04 [3.3/3.3]
QID: B5908 (P5908)

Refer to the drawing of a lube oil temperature control system (see figure below).

The temperature controller is a direct-acting proportional controller. Which one of the following describes the effect of changing the controller's gain from 1.0 to 2.0?

A. Half the change in measured temperature will produce the same change in controller input.

B. Twice the change in measured temperature will produce the same change in controller input.

C. The temperature control valve will move half as far for the same change in controller input.

D. The temperature control valve will move twice as far for the same change in controller input.

ANSWER: D.

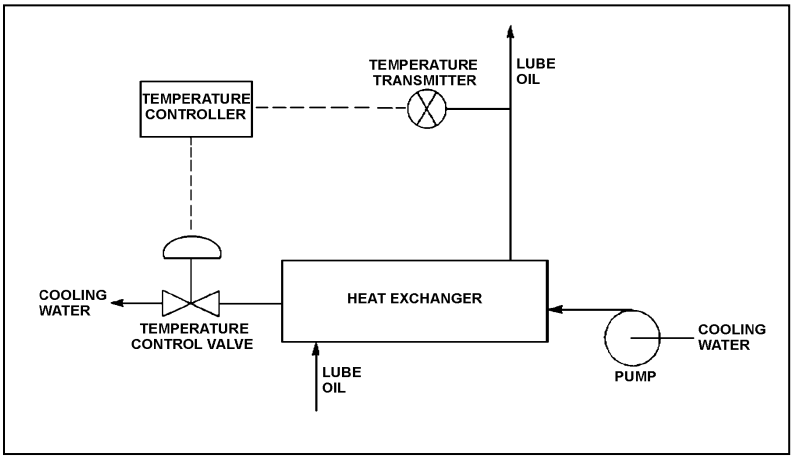

TOPIC: 291003
KNOWLEDGE: K1.04 [3.3/3.3]
QID: B6208 (P6209)

An outside water storage tank is equipped with submerged heaters. The heaters energize at minimum power when water temperature decreases to 48°F. If water temperature continues to decrease, heater power will increase directly with the temperature deviation from 48°F until maximum power is reached at 40°F. If water temperature decreases faster than 1°F/min, the heaters will reach maximum power at a higher water temperature.

Which one of the following types of control is used in the heater control circuit to produce these characteristics?

A. Proportional only

B. Proportional plus integral

C. Proportional plus derivative

D. Proportional plus integral plus derivative

ANSWER: C.

TOPIC: 291003
KNOWLEDGE: K1.04 [3.3/3.3]
QID: B6409 (P6408)

Refer to the drawing of a lube oil temperature control system (see figure below).

The temperature controller is a direct-acting proportional-integral controller with a gain of 1.0. A step increase in lube oil temperature results in an initial controller demand for the temperature control valve (TCV) to open an additional 10 percent. After the lube oil temperature stabilizes, the final TCV position is 60 percent open.

If the controller's gain was 2.0 rather than 1.0, the initial controller demand for the above temperature transient would be for the TCV to open an additional _____ percent; and the final TCV position would be _____ percent open.

A. 5; 60

B. 5; less than 60

C. 20; 60

D. 20; more than 60

ANSWER: C.

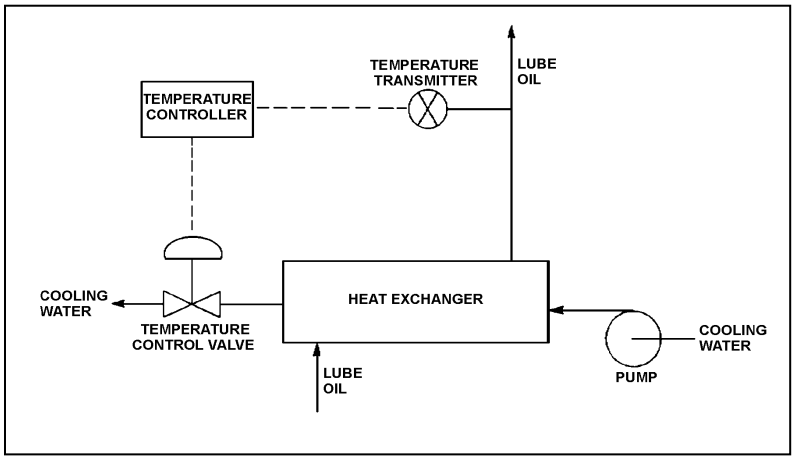

TOPIC: 291003
KNOWLEDGE: K1.04 [3.3/3.3]
QID: B6609 (P6607)

Refer to the drawing of a lube oil temperature control system (see figure below).

The temperature controller is a direct-acting proportional-integral controller with a gain of 1.0. All system temperatures are initially stable.

An increase in lube oil temperature causes the controller to open the temperature control valve (TCV) farther. What would be the effect on the TCV response if the controller gain was 2.0 rather than 1.0?

A. The final TCV position would be half as far from its initial position.

B. The final TCV position would be twice as far from its initial position.

C. The final TCV position would be the same, but the TCV initially would travel a greater distance in response to the lube oil temperature change.

D. The final TCV position would be the same, but the TCV initially would travel a shorter distance in response to the lube oil temperature change.

ANSWER: C.

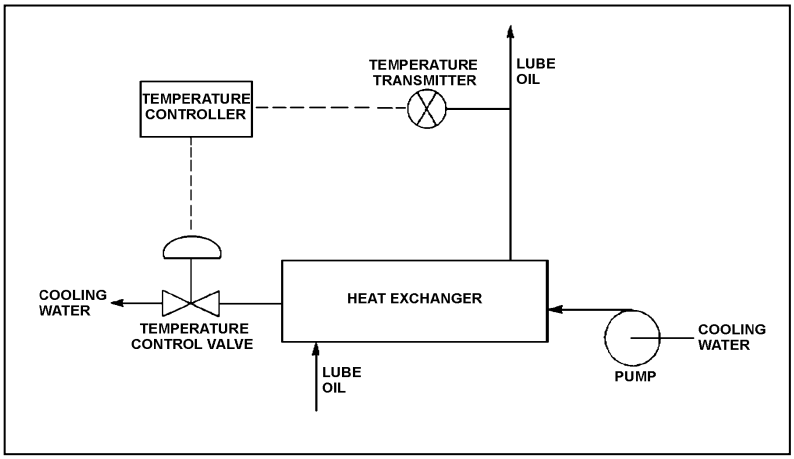

TOPIC: 291003
KNOWLEDGE: K1.04 [3.3/3.3]
QID: B6709 (P6707)

Refer to the drawing of four bistable symbols (see figure below).

A temperature controller uses a bistable that turns on to actuate a warning light when the controlled temperature reaches a low setpoint. The bistable turns off to extinguish the warning light when the temperature increases to 5°F above the low setpoint.

Which one of the following bistable symbols indicates the characteristics of the bistable?

A. 1.

B. 2.

C. 3.

D. 4.

ANSWER: B.

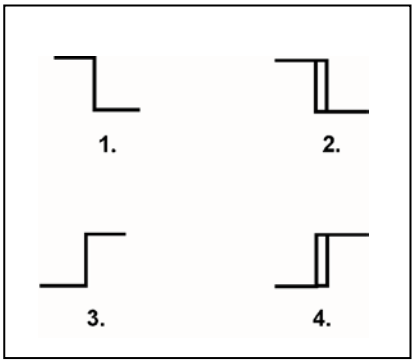

TOPIC: 291003
KNOWLEDGE: K1.04 [3.3/3.3]
QID: B6909 (P6908)

A direct-acting proportional controller is being used to control the temperature of lube oil exiting a heat exchanger. The controller's proportional band is 80°F to 130°F.

Which one of the following will be the controller's output percentage when the measured lube oil temperature is 92°F?

A. 12 percent

B. 24 percent

C. 38 percent

D. 76 percent

ANSWER: B.

TOPIC: 291003
KNOWLEDGE: K1.04 [3.3/3.3]
QID: B7408 (P7408)

Refer to the logic diagram for a valve controller (see figure below).

Which one of the following combinations of inputs will result in the valve receiving an OPEN signal?

	INPUTS			
	1	2	3	4
A.	Off	On	Off	Off
B.	Off	On	On	Off
C.	On	Off	Off	On
D.	On	Off	On	On

ANSWER: B.

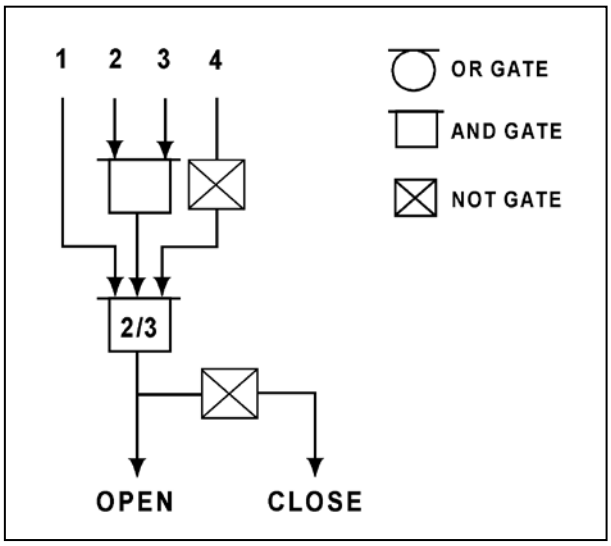

TOPIC: 291003
KNOWLEDGE: K1.05 [2.8/2.8]
QID: B217

The output pressure of a pneumatic controller is typically insufficient to drive a valve actuator accurately. To overcome this problem, a pneumatic control system will normally employ a/an...

A. valve actuating lead/lag unit.

B. air pressure regulator.

C. valve positioner.

D. air accumulator.

ANSWER: C.

TOPIC: 291003
KNOWLEDGE: K1.05 [2.8/2.8]
QID: B317 (P318)

Refer to the drawing of a pneumatic control system (see figure below).

The purpose of the valve positioner is to convert...

A. a small control air pressure into a proportionally larger air pressure to adjust valve position.

B. a large control air pressure into a proportionally smaller air pressure to adjust valve position.

C. pneumatic force into mechanical force to adjust valve position.

D. mechanical force into pneumatic force to adjust valve position.

ANSWER: A.

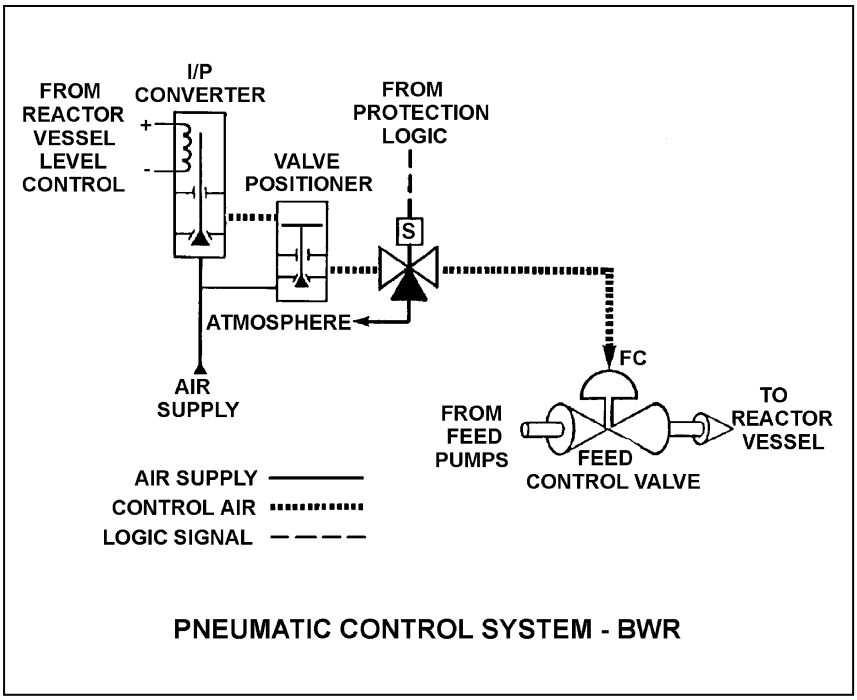

TOPIC: 291003
KNOWLEDGE: K1.05 [2.8/2.8]
QID: B816

The output pressure of a pneumatic controller is typically insufficient to drive a valve actuator accurately. To overcome this problem, a pneumatic control system will normally employ a...

A. diaphragm operator.

B. pneumatic clutch.

C. torque converter.

D. valve positioner.

ANSWER: D.

TOPIC: 291003
KNOWLEDGE: K1.05 [2.8/2.8]
QID: B1116 (P1117)

An air-operated isolation valve requires 4,800 pounds-force from its diaphragm actuator and 4 inches of stem travel for proper operation. The valve positioner can supply up to 80 psig of air pressure to the actuator.

What is the minimum surface area of the actuator diaphragm required for proper valve operation?

A. 15 square inches

B. 60 square inches

C. 120 square inches

D. 240 square inches

ANSWER: B.

TOPIC: 291003
KNOWLEDGE: K1.05 [2.8/2.8]
QID: B1416 (P1217)

What is the purpose of a valve positioner in a typical pneumatic valve control system?

A. Convert the valve controller pneumatic output signal to a mechanical force to position the valve.

B. Convert the valve controller pneumatic output signal to an electrical output to position the valve.

C. Compare valve controller pneumatic output signal to setpoint error, and adjust valve actuator air supply pressure to position the valve.

D. Compare valve controller pneumatic output signal to valve position, and adjust valve actuator air supply pressure to position the valve.

ANSWER: D.

TOPIC: 291003
KNOWLEDGE: K1.05 [2.8/2.8]
QID: B1517 (P1516)

An air-operated isolation valve requires 3,200 pounds-force from its diaphragm actuator and 4 inches of stem travel for proper operation. The area of the actuator diaphragm is 80 square inches.

What is the approximate air pressure required for proper valve operation?

A. 10 psig

B. 25 psig

C. 40 psig

D. 55 psig

ANSWER: C.

TOPIC: 291003
KNOWLEDGE: K1.05 [2.8/2.8]
QID: B1617 (P1618)

An air-operated isolation valve requires 3,600 pounds-force from its diaphragm actuator and 4 inches of stem travel for proper operation. The valve positioner can supply up to 120 psig of air pressure to the actuator.

What is the minimum surface area of the actuator diaphragm required for proper valve operation?

A. 30 square inches

B. 60 square inches

C. 90 square inches

D. 120 square inches

ANSWER: A.

TOPIC: 291003
KNOWLEDGE: K1.05 [2.8/2.8]
QID: B2117 (P2116)

An air-operated isolation valve requires 3,200 pounds-force from its diaphragm actuator and 4 inches of stem travel for proper operation. The area of the actuator diaphragm is 160 square inches.

What is the approximate air pressure required for proper valve operation?

A. 20 psig

B. 40 psig

C. 60 psig

D. 80 psig

ANSWER: A.

TOPIC: 291003
KNOWLEDGE: K1.05 [2.8/2.8]
QID: B2216 (P2617)

Which one of the following describes a characteristic of pneumatic valve positioners?

A. They can provide automatic and manual demand signals to pneumatic controllers and valve actuators.

B. They can increase or decrease air pressure to valve actuators to obtain the proper valve response.

C. They can either supply or receive air to/from pneumatic controllers, depending on the direction of valve travel.

D. They can increase air pressure to valve actuators above existing main air header pressure.

ANSWER: B.

TOPIC: 291003
KNOWLEDGE: K1.05 [2.8/2.8]
QID: B2416 (P2417)

An air-operated isolation valve requires 3,600 pounds-force applied to the top of the actuator diaphragm to open. The actuator diaphragm has a diameter of 9 inches and the valve stem travels 3 inches from fully open to fully closed.

If control air pressure to the valve actuator begins to increase from 0 psig, which one of the following is the approximate air pressure at which the valve will begin to open?

A. 14 psig

B. 57 psig

C. 81 psig

D. 127 psig

ANSWER: B.

TOPIC: 291003
KNOWLEDGE: K1.05 [2.8/2.8]
QID: B2516 (P2517)

An air-operated isolation valve requires 2,400 pounds-force applied to the top of the actuator diaphragm to open. The actuator diaphragm has a diameter of 12 inches.

If control air pressure to the valve actuator begins to increase from 0 psig, which one of the following is the approximate air pressure at which the valve will begin to open?

A. 21 psig

B. 34 psig

C. 43 psig

D. 64 psig

ANSWER: A.

TOPIC: 291003
KNOWLEDGE: K1.05 [2.8/2.8]
QID: B2716 (P2716)

An air-operated isolation valve requires 3,600 pounds-force applied to the top of the actuator diaphragm to open. The actuator diaphragm has a diameter of 8 inches.

If control air pressure to the valve actuator begins to increase from 0 psig, which one of the following is the approximate air pressure at which the valve will begin to open?

A. 32 psig

B. 45 psig

C. 56 psig

D. 72 psig

ANSWER: D.

TOPIC: 291003
KNOWLEDGE: K1.05 [2.8/2.8]
QID: B2816 (P1116)

Which one of the following describes a characteristic of pneumatic valve positioners?

A. They provide auto and manual demand signals to valve controllers and valve actuators.

B. They supply air pressure to valve actuators in response to a control signal to regulate valve position.

C. They can either receive or supply air to/from valve controllers, depending on the direction of valve travel.

D. They act independently of the valve controller, in order to prevent pressure transients on the valve actuator diaphragm.

ANSWER: B.

TOPIC: 291003
KNOWLEDGE: K1.05 [2.8/2.8]
QID: B2915 (P2917)

An air-operated isolation valve requires 2,400 pounds-force applied to the top of the actuator diaphragm to open against spring pressure. The actuator diaphragm has a diameter of 12 inches.

If control air pressure to the valve actuator begins to decrease from 100 psig, which one of the following is the approximate air pressure at which the valve will begin to close?

A. 5 psig

B. 17 psig

C. 21 psig

D. 66 psig

ANSWER: C.

TOPIC: 291003
KNOWLEDGE: K1.05 [2.8/2.8]
QID: B2917 (P2416)

Which one of the following describes the operation of a typical pneumatic valve positioner?

A. Compares the valve controller demand signal with actual valve position and sends an error signal to the valve controller for adjustment of the demand signal.

B. Compares the valve controller automatic and manual setpoints and sends an error signal to the valve controller to ensure the manual demand signal is tracking the automatic demand signal.

C. Receives a valve position error signal from the valve controller and positions the valve as necessary to null the valve position error signal.

D. Receives a demand signal from the valve controller and supplies the appropriate air pressure to the valve actuator to move the valve to the demanded position.

ANSWER: D.

TOPIC: 291003
KNOWLEDGE: K1.05 [2.8/2.8]
QID: B3317 (P2216)

An air-operated isolation valve requires 2,800 pounds-force (lbf) from its diaphragm actuator and 4 inches of stem travel for proper operation. The valve positioner can supply up to 117 psig of air pressure to the actuator.

What is the minimum surface area of the actuator diaphragm required for proper valve operation?

A. 24 square inches

B. 48 square inches

C. 94 square inches

D. 138 square inches

ANSWER: A.

TOPIC: 291003
KNOWLEDGE: K1.06 [2.5/2.6]
QID: B417 (P417)

If the turbine shaft speed signal received by a typical turbine governor control system fails low during turbine startup, the turbine governor will cause turbine speed to...

A. increase until the mismatch with demanded turbine speed is nulled.

B. increase until an upper limit is reached or the turbine trips on overspeed.

C. decrease until the mismatch with demanded turbine speed is nulled.

D. decrease to a minimum speed setpoint.

ANSWER: B.

TOPIC: 291003
KNOWLEDGE: K1.06 [2.5/2.6]
QID: B1016 (P1815)

If the turbine shaft speed signal received by a typical turbine governor control system fails <u>high</u> during turbine startup, the turbine governor will cause turbine speed to...

A. increase until an upper limit is reached or the turbine trips on overspeed.

B. increase until the mismatch with the turbine speed demand signal is nulled.

C. decrease until a lower limit is reached or turbine steam flow is isolated.

D. decrease until the mismatch with the turbine speed demand signal is nulled.

ANSWER: C.

TOPIC: 291003
KNOWLEDGE: K1.06 [2.5/2.6]
QID: B1316 (P419)

Refer to the drawing of a flyball-weight mechanical speed governor (see figure below).

In a flyball-weight mechanical speed governor, the purpose of the spring on the flyball mechanism is to _____ centrifugal force by driving the flyballs _____.

A. counteract; outward

B. aid; inward

C. counteract; inward

D. aid; outward

ANSWER: C.

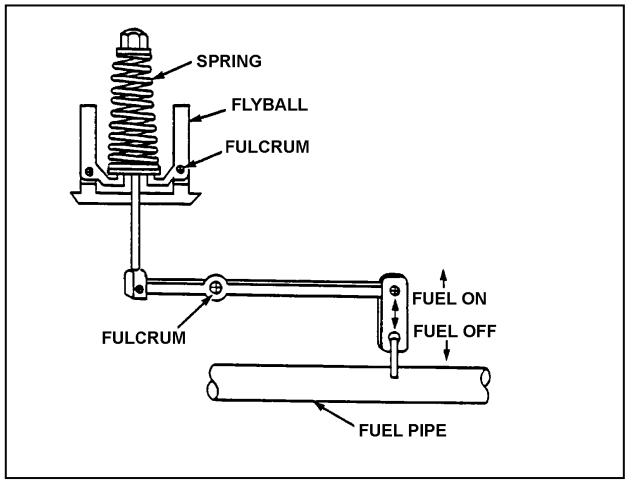

TOPIC: 291003
KNOWLEDGE: K1.06 [2.5/2.6]
QID: B1815 (P1818)

A diesel generator is supplying an isolated electrical bus with the governor operating in the isochronous mode. If a large electrical load is started on the bus, generator frequency will...

A. initially decrease, then increase and stabilize below the initial value.

B. initially decrease, then increase and stabilize at the initial value.

C. initially decrease, then increase and stabilize above the initial value.

D. remain constant during and after the load start.

ANSWER: B.

TOPIC: 291003
KNOWLEDGE: K1.06 [2.5/2.6]
QID: B2015 (P2018)

A diesel generator is supplying an isolated electrical bus with the governor operating in the isochronous mode. If a large electrical bus load trips, generator frequency will...

A. initially increase, then decrease and stabilize below the initial value.

B. initially increase, then decrease and stabilize at the initial value.

C. initially increase, then decrease and stabilize above the initial value.

D. remain constant during and after the load trip.

ANSWER: B.

TOPIC: 291003
KNOWLEDGE: K1.06 [2.5/2.6]
QID: B2817 (P2818)

A diesel generator (DG) is supplying an isolated electrical bus with the DG governor operating in the speed droop mode. Assuming the DG does not trip, if a large electrical bus load trips, bus frequency will initially...

A. increase, then decrease and stabilize below the initial value.

B. increase, then decrease and stabilize above the initial value.

C. decrease, then increase and stabilize below the initial value.

D. decrease, then increase and stabilize above the initial value.

ANSWER: B.

TOPIC: 291004
KNOWLEDGE: K1.01 [3.2/3.2]
QID: B218 (P221)

A centrifugal pump is initially operating at maximum rated flow rate in an open system. Which one of the following moderate changes will cause the pump to operate in closer proximity to cavitation?

A. Increase pump inlet temperature.

B. Decrease pump speed.

C. Increase pump suction pressure.

D. Decrease pump recirculation flow rate.

ANSWER: A.

TOPIC: 291004
KNOWLEDGE: K1.01 [3.2/3.2]
QID: B320

Which one of the following changes in nuclear power plant status will bring the reactor recirculation system closer to the condition in which the recirculation pump will cavitate?

A. During a plant shutdown, recirculation pump suction temperature decreases while reactor pressure remains constant.

B. Recirculation pump speed increases.

C. Reactor water level increases.

D. During reactor power operations, extraction steam to one of the high pressure feedwater heaters isolates.

ANSWER: B.

TOPIC: 291004
KNOWLEDGE: K1.01 [3.2/3.2]
QID: B1018 (P1520)

If a centrifugal pump is started with the discharge valve fully open versus throttled, the possibility of pump runout will _____; and the possibility of pump cavitation will _____.

A. increase; decrease

B. increase; increase

C. decrease; decrease

D. decrease; increase

ANSWER: B.

TOPIC: 291004
KNOWLEDGE: K1.01 [3.2/3.2]
QID: B1218 (P1220)

Which one of the following describes pump cavitation?

A. Vapor bubbles are formed when the enthalpy difference between pump discharge and pump suction exceeds the latent heat of vaporization.

B. Vapor bubbles are formed in the eye of the pump impeller and collapse as they enter higher pressure regions of the pump.

C. Vapor bubbles are produced when the localized pressure exceeds the vapor pressure at the existing temperature.

D. Vapor bubbles are discharged from the pump where they collapse on downstream piping and cause localized water hammers.

ANSWER: B.

TOPIC: 291004
KNOWLEDGE: K1.01 [3.2/3.2]
QID: B1718 (P1820)

If a centrifugal pump is started with the discharge valve throttled versus fully open, the possibility of pump runout will _____; and the possibility of pump cavitation will _____.

A. increase; decrease

B. increase; increase

C. decrease; decrease

D. decrease; increase

ANSWER: C.

TOPIC: 291004
KNOWLEDGE: K1.01 [3.2/3.2]
QID: B2118 (P1021)

Which one of the following will result in immediate cavitation of a centrifugal pump that is initially operating at normal rated flow?

A. Recirculation flow path is aligned.

B. Recirculation flow path is isolated.

C. Pump suction valve is fully closed.

D. Pump discharge valve is fully closed.

ANSWER: C.

TOPIC: 291004
KNOWLEDGE: K1.02 [2.8/2.8]
QID: B18

Venting a centrifugal pump prior to operating it ensures that...

A. pump runout will <u>not</u> occur.

B. pump internal corrosion is reduced.

C. gas binding is reduced.

D. starting load is minimized.

ANSWER: C.

TOPIC: 291004
KNOWLEDGE: K1.02 [2.8/2.8]
QID: B219

Gas binding in a centrifugal pump can be prevented by _____ prior to pump start.

A. venting the pump

B. lowering suction pressure

C. throttling the discharge valve

D. shutting the discharge valve

ANSWER: A.

TOPIC: 291004
KNOWLEDGE: K1.02 [2.8/2.8]
QID: B1821 (P1927)

Which one of the following is an effective method for ensuring that a centrifugal pump remains primed and does not become gas bound during operation and after shutdown?

A. Install the pump below the level of the suction supply.

B. Install a check valve in the discharge piping of the pump.

C. Install an orifice plate in the discharge piping of the pump.

D. Install a pump recirculation line from the pump discharge piping to the pump suction piping.

ANSWER: A.

TOPIC: 291004
KNOWLEDGE: K1.03 [2.8/2.9]
QID: B518

Which one of the following describes gas binding of a centrifugal pump?

A. Pump capacity is reduced, due to the presence of steam or air in the pump impeller.

B. Pump capacity is reduced, due to windage losses between the pump impeller and pump casing.

C. Pump motor current increases, due to the compression of gases in the pump volute.

D. Pump motor current increases, due to the high head requirements for pumping a fluid saturated with dissolved gases.

ANSWER: A.

TOPIC: 291004
KNOWLEDGE: K1.04 [3.0/3.1]
QID: B19

Which one of the following would result from operating a motor-driven centrifugal pump for extended periods of time with the discharge valve shut and no recirculation flow?

A. No damage, because the pump and motor are designed to operate with the discharge valve shut

B. Pump overheating, cavitating, and ultimately pump failure

C. Excessive motor current, damage to motor windings, and ultimately motor failure

D. Pump and motor overspeed, and tripping on high motor current

ANSWER: B.

TOPIC: 291004
KNOWLEDGE: K1.04 [3.0/3.1]
QID: B319 (P321)

A motor-driven centrifugal pump with <u>no</u> recirculation flow path must be stopped when discharge pressure reaches the pump shutoff head to prevent...

A. overheating of the pump.

B. overheating of the motor.

C. bursting of the pump casing.

D. water hammer in downstream lines.

ANSWER: A.

TOPIC: 291004
KNOWLEDGE: K1.04 [3.0/3.1]
QID: B423 (P23)

Operating a motor-driven centrifugal pump for an extended period of time under no flow conditions will cause...

A. pump failure from overspeed.

B. pump failure from overheating.

C. motor failure from overspeed.

D. motor failure from overheating.

ANSWER: B.

TOPIC: 291004
KNOWLEDGE: K1.04 [3.0/3.1]
QID: B1219 (P2221)

Refer to the drawing of a pump with a recirculation line (see figure below).

Valve A will open when pump...

A. discharge pressure increases above a setpoint.

B. discharge pressure decreases below a setpoint.

C. flow rate increases above a setpoint.

D. flow rate decreases below a setpoint.

ANSWER: D.

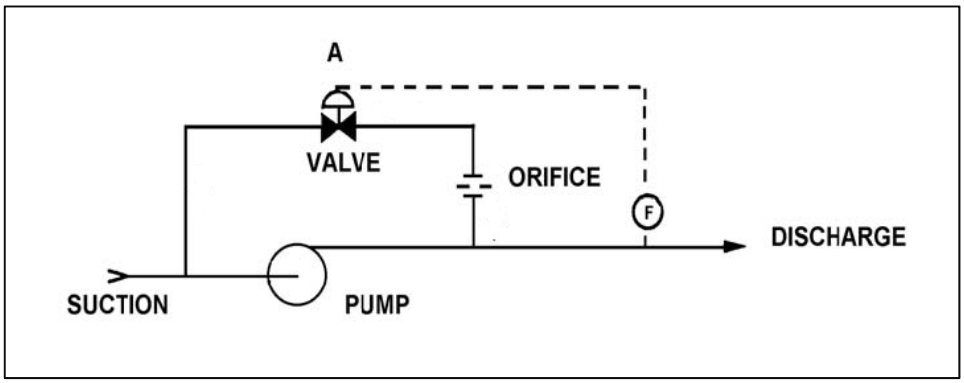

TOPIC: 291004
KNOWLEDGE: K1.04 [3.0/3.1]
QID: B1319 (P119)

Refer to the drawing of centrifugal pump and system operating curves (see figure below).

Which point represents pump operation at shutoff head?

A. Point A

B. Point B

C. Point C

D. Point D

ANSWER: A.

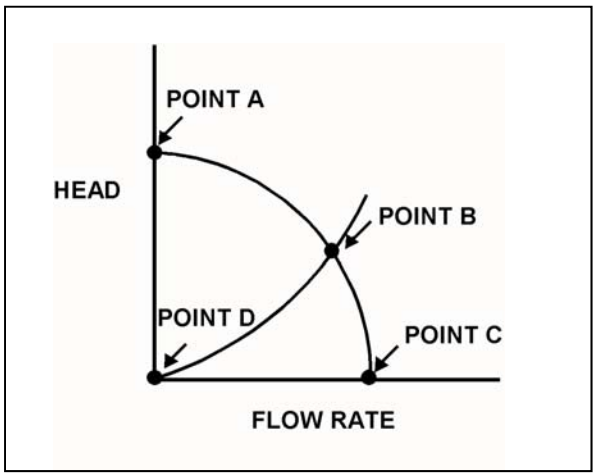

TOPIC: 291004
KNOWLEDGE: K1.04 [3.0/3.1]
QID: B1917 (P1320)

Refer to the drawing of a pump with recirculation line (see figure below).

The flowpath through valve A is designed to...

A. prevent pump runout by creating a recirculation flowpath.

B. provide a small flow rate through the pump during shutoff head conditions.

C. direct a small amount of water to the pump suction to raise available net positive suction head.

D. prevent the discharge piping from exceeding design pressure during no-flow conditions.

ANSWER: B.

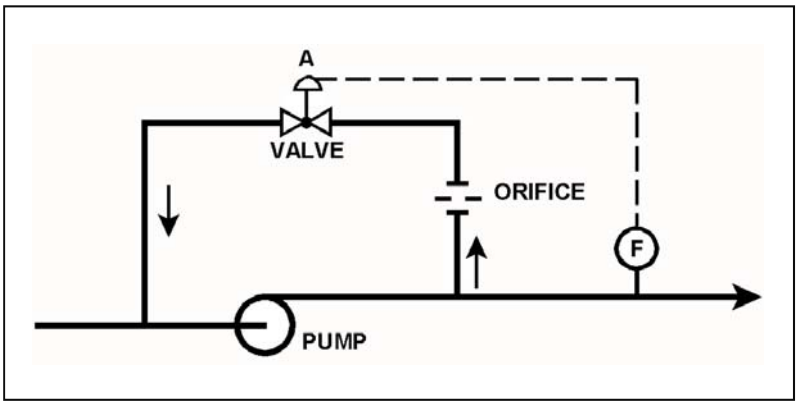

TOPIC: 291004
KNOWLEDGE: K1.04 [3.0/3.1]
QID: B2017 (P2019)

Refer to the drawing of a pump with recirculation line (see figure below).

Which one of the following describes the response of the pump if a complete flow blockage occurs in the discharge line just downstream of the flow transmitter?

A. The pump will overheat after a relatively short period of time, due to a loss of both main flow and recirculation flow.

B. The pump will overheat after a relatively long period of time, due to a loss of main flow only.

C. The pump will overheat after a relatively long period of time, due to a loss of recirculation flow only.

D. The pump will be able to operate under these conditions indefinitely, due to sustained main flow.

ANSWER: B.

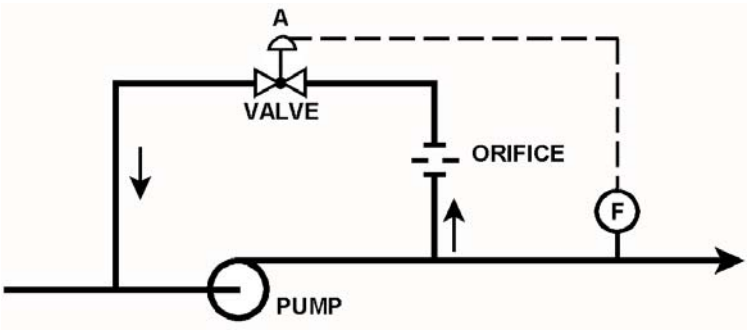

TOPIC: 291004
KNOWLEDGE: K1.04 [3.0/3.1]
QID: B2225 (P3122)

Refer to the drawing of a pump with a recirculation line (see figure below).

Valve A will close when pump...

A. discharge pressure increases above a setpoint.

B. discharge pressure decreases below a setpoint.

C. flow rate increases above a setpoint.

D. flow rate decreases below a setpoint.

ANSWER: C.

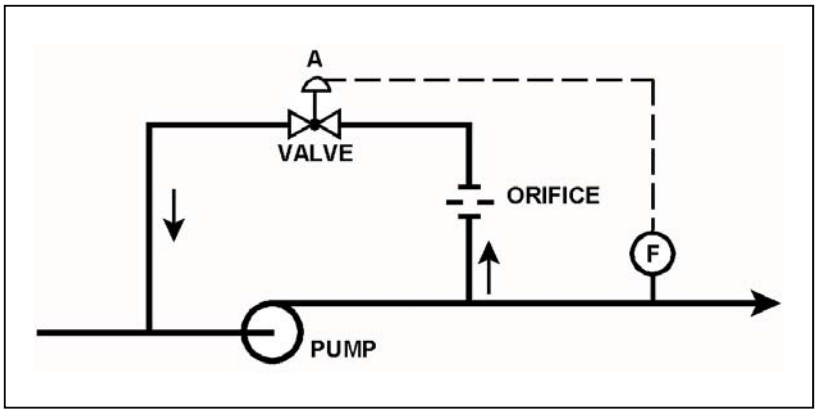

TOPIC: 291004
KNOWLEDGE: K1.05 [2.8/2.9]
QID: B20

A centrifugal pump is operating at rated speed with a pump head of 240 psid. The speed of the pump is then decreased until the power consumption is 1/64 of its original value. What is the approximate new pump head?

A. 3.75 psid

B. 15 psid

C. 30 psid

D. 60 psid

ANSWER: B.

TOPIC: 291004
KNOWLEDGE: K1.05 [2.8/2.9]
QID: B102

The discharge head of a centrifugal pump will decrease if the...

A. pump suction pressure is increased.

B. speed of the pump increases.

C. discharge valve is throttled closed.

D. temperature of the fluid being pumped increases.

ANSWER: D.

TOPIC: 291004
KNOWLEDGE: K1.05 [2.8/2.9]
QID: B106

A multi-speed centrifugal pump is operating at 1800 rpm, providing a flow of 400 gpm with a pump head of 20 psid. If the pump speed is increased to 3600 rpm, the new pump head will be...

A. 160 psid

B. 80 psid

C. 60 psid

D. 40 psid

ANSWER: B.

TOPIC: 291004
KNOWLEDGE: K1.05 [2.8/2.9]
QID: B112

A variable-speed centrifugal pump is running with its drive motor at 1,800 rpm. The initial flow rate is 1,000 gpm, total head is 100 feet, and work input is 500 hp.

If the flow rate is changed to 1,200 gpm, which one of the following will be the correct value for new work input?

A. 550 hp

B. 778 hp

C. 864 hp

D. 912 hp

ANSWER: C.

TOPIC: 291004
KNOWLEDGE: K1.05 [2.8/2.9]
QID: B1020 (P3323)

Refer to the drawing of a cooling water system and the associated pump/system operating curves (see figure below). Pumps A and B are identical single-speed centrifugal pumps and initially only pump A is operating.

Pump B is then started. After the system stabilizes, system flow rate will be...

A. the same as the initial flow rate.

B. less than twice the initial flow rate.

C. twice the initial flow rate.

D. more than twice the initial flow rate.

ANSWER: B.

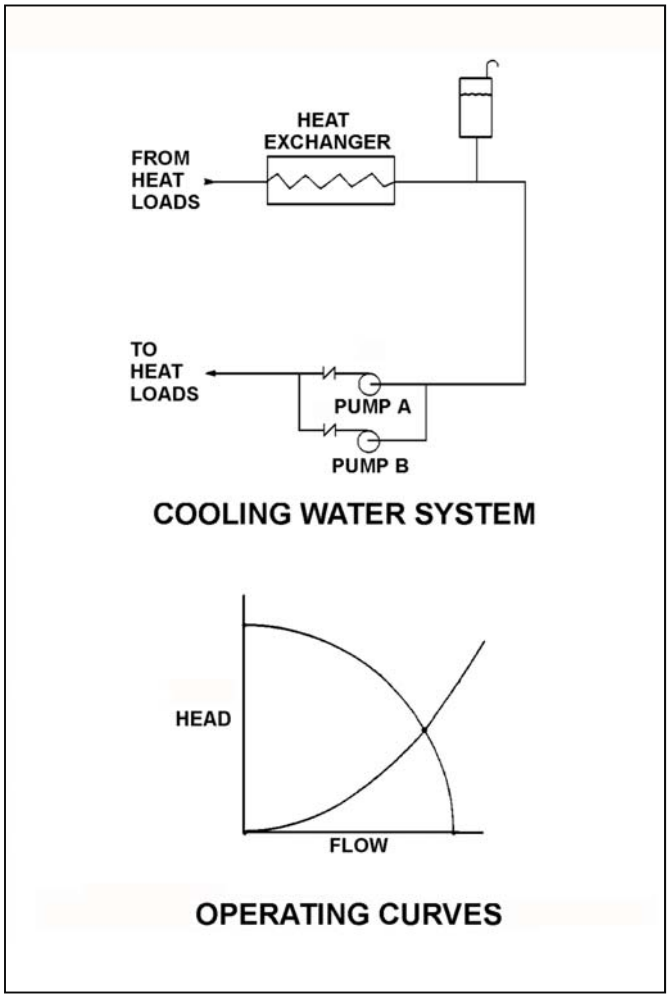

TOPIC: 291004
KNOWLEDGE: K1.05 [2.8/2.9]
QID: B1221

A centrifugal pump is operating with the following parameters:

Pump head = 50 psid
Flow rate = 200 gpm
Power input = 3 KW

Pump speed is increased and flow rate increases to 400 gpm. Which one of the following is the value of the new power consumption?

A. 6 KW

B. 9 KW

C. 24 KW

D. 27 KW

ANSWER: C.

TOPIC: 291004
KNOWLEDGE: K1.05 [2.8/2.9]
QID: B1320

The discharge head of a variable-speed centrifugal pump will increase if the...

A. pump suction pressure is increased.

B. speed of the pump decreases.

C. pump discharge valve is opened farther.

D. temperature of the fluid being pumped increases.

ANSWER: A.

TOPIC: 291004
KNOWLEDGE: K1.05 [2.8/2.9]
QID: B1519

An AC motor-driven centrifugal pump is operating with the following parameters:

Flow rate = 300 gpm
Power input = 4 KW

Pump speed is increased and flow rate increases to 400 gpm.

Which one of the following is the approximate value of the new power consumption?

A. 5.3 KW

B. 7.1 KW

C. 9.5 KW

D. 11.7 KW

ANSWER: C.

TOPIC: 291004
KNOWLEDGE: K1.05 [2.8/2.9]
QID: B1619

A multi-speed centrifugal pump is operating with a flow rate of 3,000 gpm. Which one of the following approximates the new flow rate if the speed is decreased from 3,600 rpm to 2,400 rpm?

A. 1,000 gpm

B. 1,500 gpm

C. 2,000 gpm

D. 2,500 gpm

ANSWER: C.

TOPIC: 291004
KNOWLEDGE: K1.05 [2.8/2.9]
QID: B1719 (P1729)

A motor-driven centrifugal pump is operating with the following parameters:

Speed = 1,800 rpm
Motor current = 40 amps
Pump head = 20 psid
Pump flow rate = 400 gpm

What will be the approximate values of pump head and motor current if pump speed is decreased to 1,200 rpm?

A. 13 psid, 18 amps

B. 13 psid, 12 amps

C. 9 psid, 18 amps

D. 9 psid, 12 amps

ANSWER: D.

TOPIC: 291004
KNOWLEDGE: K1.05 [2.8/2.9]
QID: B2321 (P2329)

A multi-speed centrifugal pump is operating at 3,600 rpm with a flow rate of 3,000 gpm. Which one of the following approximates the new flow rate if the speed is decreased to 3,000 rpm?

A. 1,000 gpm

B. 1,500 gpm

C. 2,000 gpm

D. 2,500 gpm

ANSWER: D.

TOPIC: 291004
KNOWLEDGE: K1.05 [2.8/2.9]
QID: B2419 (P2424)

A centrifugal pump is operating with the following parameters:

Pump head = 60 psid
Flow rate = 300 gpm
Power input = 4 KW

Pump speed is increased and flow rate increases to 400 gpm.

Which one of the following is the approximate value of the new power consumption?

A. 5.3 KW

B. 7.1 KW

C. 9.5 KW

D. 11.7 KW

ANSWER: C.

TOPIC: 291004
KNOWLEDGE: K1.05 [2.8/2.9]
QID: B2718 (P2723)

Refer to the drawing showing two operating points for the same centrifugal pump (see figure below).

Operating point A was generated from pump performance data taken six months ago. Current pump performance data was used to generate operating point B. Which one of the following would cause the observed difference between operating points A and B?

A. The pump discharge valve was more open when data was collected for operating point A.

B. The pump discharge valve was more closed when data was collected for operating point A.

C. The pump internal components have worn since data was collected for operating point A.

D. The system piping head loss has increased since data was collected for operating point A.

ANSWER: C.

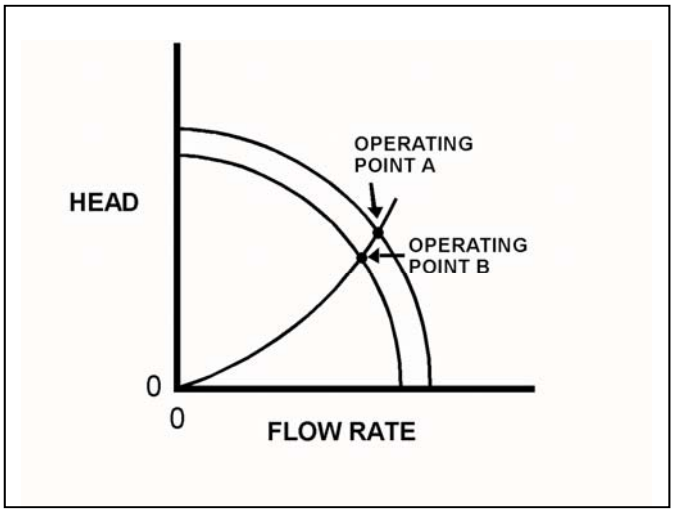

TOPIC: 291004
KNOWLEDGE: K1.05 [2.8/2.9]
QID: B3419 (P1429)

A variable-speed centrifugal pump is driven by an AC motor with the following initial conditions:

Pump speed = 400 rpm
Motor current = 40 amps
Pump head = 60 psid

If pump speed is increased to 1,600 rpm, what will be the new pump head?

A. 240 psid

B. 480 psid

C. 960 psid

D 1,440 psid

ANSWER: C.

TOPIC: 291004
KNOWLEDGE: K1.05 [2.8/2.9]
QID: B4211 (P4211)

Refer to the drawing of an operating cooling water system (see figure below).

Which one of the following changes to the cooling water system will result in a higher cooling water pump flow rate and a reduced pump discharge head?

A. Increase pump speed by 20 percent.

B. Decrease pump speed by 20 percent.

C. Isolate one of the two in-service heat loads.

D. Place the third system heat load in service.

ANSWER: D.

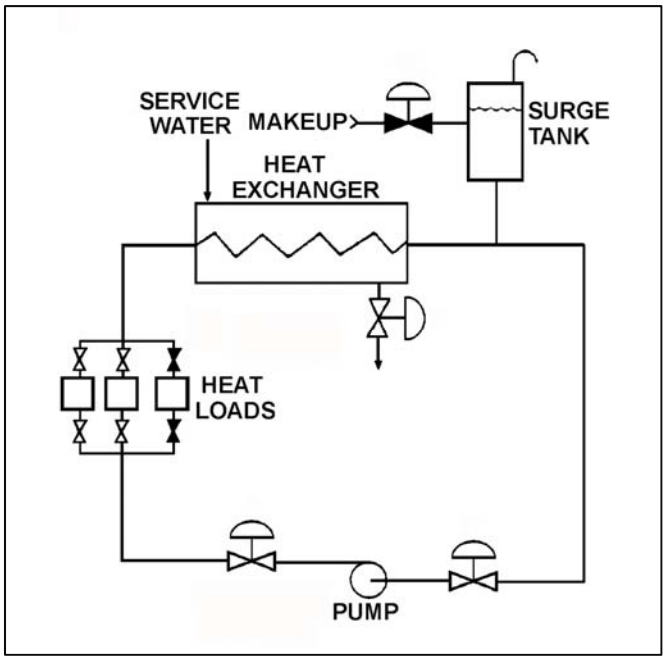

TOPIC: 291004
KNOWLEDGE: K1.05 [2.8/2.9]
QID: B6910 (P6910)

The discharge valve for a radial-flow centrifugal cooling water pump is closed in preparation for starting the pump.

After the pump is started, the following stable pump pressures are observed:

Pump discharge pressure = 30 psig
Pump suction pressure = 10 psig

With the discharge valve still closed, if the pump speed is doubled, what will be the new pump discharge pressure?

A. 80 psig

B. 90 psig

C. 120 psig

D. 130 psig

ANSWER: B.

TOPIC: 291004
KNOWLEDGE: K1.05 [2.8/2.9]
QID: B7210 (P7212)

A centrifugal pump is used to provide makeup water to a storage tank that is 30 feet high. The pump is located at the base of the tank. The pump can be aligned to fill the tank via a top connection or a bottom connection using piping of equal lengths and diameters. The tank is currently half full.

With the pump in operation, the pump will have the highest discharge pressure if the pump is aligned to fill the tank via the _____ connection; and the tank will become full in the least amount of time if the pump is aligned to fill the tank via the _____ connection.

A. top; top

B. top; bottom

C. bottom; top

D. bottom; bottom

ANSWER: B.

TOPIC: 291004
KNOWLEDGE: K1.05 [2.8/2.0]
QID: B7311 (P7311)

Refer to the drawing of an operating cooling water system (see figure below).

Which one of the following changes to the cooling water system will result in a lower cooling water pump flow rate and a higher pump discharge head?

A. Decrease pump speed by 20 percent.

B. Increase pump speed by 20 percent.

C. Isolate one of the two in-service heat loads.

D. Place the third system heat load in service.

ANSWER: C.

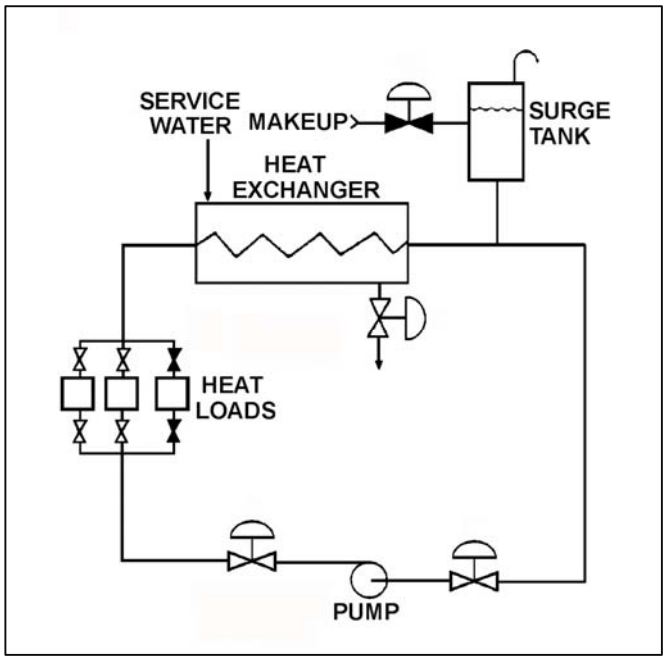

TOPIC: 291004
KNOWLEDGE: K1.05 [2.8/2.9]
QID: B7411 (P7412)

Refer to the drawing of an operating cooling water system (see figure below). The pump discharge valve is partially throttled to produce the following initial pump operating parameters:

Pump discharge pressure = 45 psig
Pump suction pressure = 15 psig
Pump flow rate = 120 gpm

After a few hours of operation, the current pump operating parameters are as follows:

Pump discharge pressure = 48 psig
Pump suction pressure = 18 psig
Pump flow rate: = 120 gpm

Which one of the following could be responsible for the change in pump operating parameters?

A. The pump speed increased with no other changes to the system.

B. The surge tank level increased with no other changes to the system.

C. The pump discharge valve was closed further while pump speed increased.

D. The pump discharge valve was closed further while surge tank level increased.

ANSWER: B.

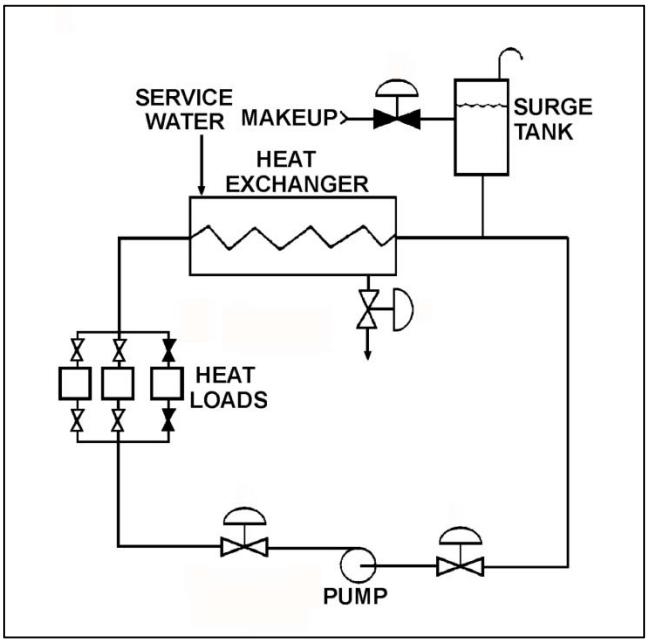

TOPIC: 291004
KNOWLEDGE: K1.06 [3.3/3.3]
QID: B21

Which one of the following will increase reactor recirculation pump available net positive suction head? (Assume all other parameters remain constant.)

A. Loss of feedwater heating while at 80 percent power

B. Increase in reactor coolant temperature from 100°F to 200°F during a reactor startup

C. Decrease in reactor pressure during a normal reactor shutdown

D. Decrease in reactor water level from the normal level to just below the low-level alarm level

ANSWER: A.

TOPIC: 291004
KNOWLEDGE: K1.06 [3.3/3.3]
QID: B25

What will occur by operating a positive displacement pump with insufficient net positive suction head?

A. Slip

B. Decreased pump speed

C. Water hammer

D. Vapor binding

ANSWER: D.

TOPIC: 291004
KNOWLEDGE: K1.06 [3.3/3.3]
QID: B121 (P1120)

Which one of the following operations in a closed system will cause a decrease in available net positive suction head for a centrifugal pump?

A. Decreasing the inlet fluid temperature.

B. Increasing the pump discharge pressure.

C. Throttling open the pump suction valve.

D. Throttling open the pump discharge valve.

ANSWER: D.

TOPIC: 291004
KNOWLEDGE: K1.06 [3.3/3.3]
QID: B222

Which one of the following conditions will result in a <u>decrease</u> in the available net positive suction head of a reactor recirculation pump?

A. Carryunder decreases.

B. Feedwater flow increases.

C. Recirculation flow rate increases.

D. Feedwater inlet subcooling increases.

ANSWER: C.

TOPIC: 291004
KNOWLEDGE: K1.06 [3.3/3.3]
QID: B720

Which one of the following will decrease the available net positive suction head to the reactor recirculation pumps? (Assume all other parameters remain constant.)

A. Increase in reactor water level from the normal level to just below the high-level alarm

B. Increase in reactor coolant temperature from 100°F to 200°F during a reactor startup

C. Increase in reactor pressure during a reactor startup

D. Loss of feedwater heating while at 80 percent power

ANSWER: B.

TOPIC: 291004
KNOWLEDGE: K1.06 [3.3/3.3]
QID: B1120

When flow from a centrifugal pump is increased by opening the discharge valve further, required net positive suction head (NPSH) _____; and available NPSH _____.

A. decreases; decreases

B. decreases; increases

C. increases; increases

D. increases; decreases

ANSWER: D.

TOPIC: 291004
KNOWLEDGE: K1.06 [3.3/3.3]
QID: B1222

Which one of the following changes in nuclear power plant status will bring the reactor recirculation system closer to the condition in which the recirculation pump will cavitate?

A. During a plant shutdown, reactor recirculation pump suction temperature decreases while reactor pressure remains constant.

B. Reactor recirculation pump speed is increased.

C. Reactor water level increases.

D. Extraction steam is isolated from one high-pressure feed water heater during power operations.

ANSWER: B.

TOPIC: 291004
KNOWLEDGE: K1.06 [3.3/3.3]
QID: B1621 (P1221)

Refer to the drawing of a cooling water system (see figure below).

The available net positive suction head for the centrifugal pump will be increased by...

A. opening surge tank makeup valve A to raise tank level.

B. throttling heat exchanger service water valve B more closed.

C. throttling pump discharge valve C more open.

D. throttling pump suction valve D more closed.

ANSWER: A.

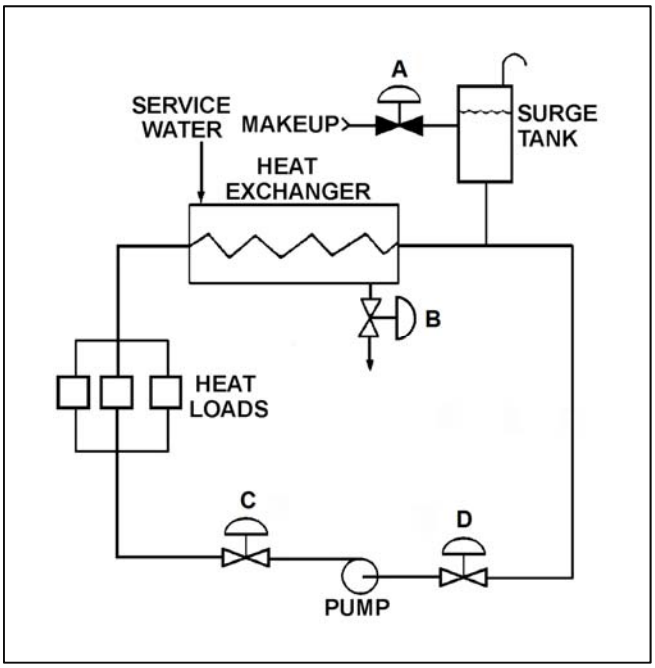

TOPIC: 291004
KNOWLEDGE: K1.06 [3.3/3.3]
QID: B1918 (P1521)

Refer to the drawing of a cooling water system (see figure below).

The available net positive suction head for the centrifugal pump will be decreased by...

A. opening surge tank makeup valve A to raise tank level.

B. throttling heat exchanger service water valve B more open.

C. throttling pump discharge valve C more open.

D. reducing the heat load on the cooling water system.

ANSWER: C.

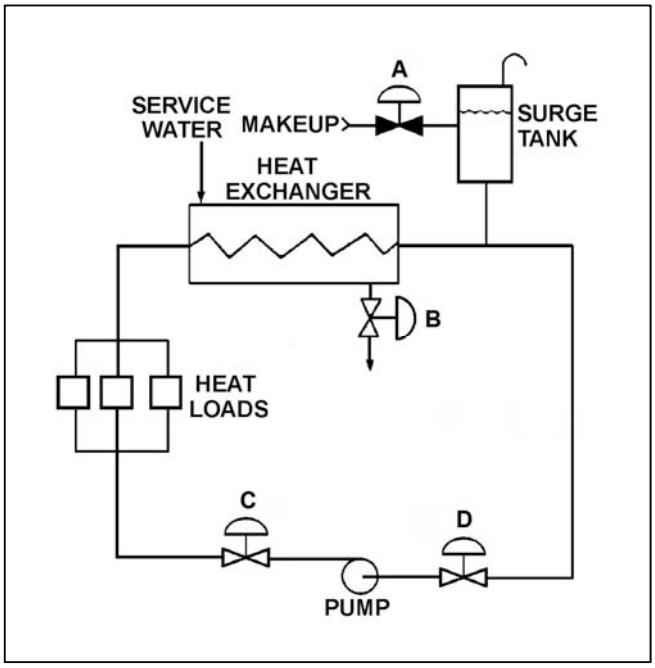

TOPIC: 291004
KNOWLEDGE: K1.06 [3.3/3.3]
QID: B2019 (P2025)

A variable-speed centrifugal pump is operating at rated speed in an open system. If the pump speed is decreased by 50 percent, available net positive suction head (NPSH) will _____; and required NPSH will _____.

A. increase; decrease

B. increase; remain the same

C. decrease; decrease

D. decrease; remain the same

ANSWER: A.

TOPIC: 291004
KNOWLEDGE: K1.06 [3.3/3.3]
QID: B2119 (P1822)

Refer to the drawing of an operating cooling water system (see figure below).

Which one of the following will increase available net positive suction head for the centrifugal pump?

A. Draining the surge tank to decrease level by 10 percent.

B. Positioning heat exchanger service water valve B more closed.

C. Positioning pump discharge valve C more closed.

D. Positioning pump suction valve D more closed.

ANSWER: C.

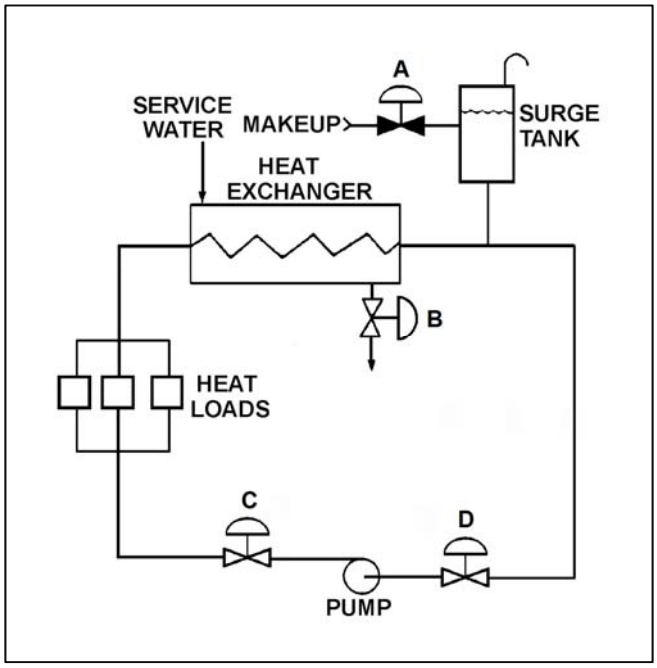

TOPIC: 291004
KNOWLEDGE: K1.06 [3.3/3.3]
QID: B2223 (P114)

A motor-driven centrifugal pump is operating in an open system with its discharge valve throttled to 50 percent open. If the discharge valve is fully opened, available net positive suction head (NPSH) will _____; and required NPSH will _____.

A. remain the same; increase

B. remain the same; remain the same

C. decrease; increase

D. decrease; remain the same

ANSWER: C.

TOPIC: 291004
KNOWLEDGE: K1.06 [3.3/3.3]
QID: B2319 (P2323)

Refer to the drawing of an operating cooling water system (see figure below).

Which one of the following will decrease available net positive suction head for the centrifugal pump?

A. Adding water to the surge tank to raise level by 10 percent.

B. Positioning heat exchanger service water valve B more open.

C. Positioning pump discharge valve C more open.

D. Reducing heat loads on the cooling water system by 10 percent.

ANSWER: C.

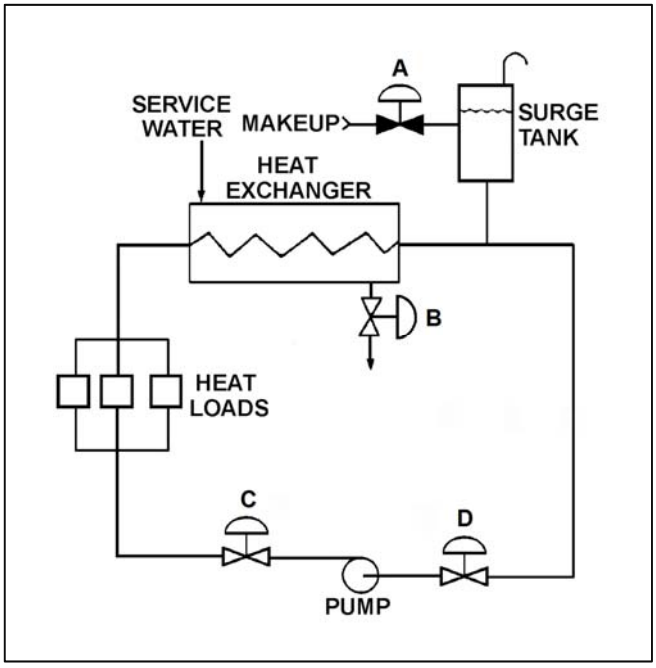

TOPIC: 291004
KNOWLEDGE: K1.06 [3.3/3.3]
QID: B2420 (P2424)

A variable speed motor-driven centrifugal pump is operating at 50 percent speed in an open system. If the pump speed is increased to 100 percent, available net positive suction head (NPSH) will _____; and required NPSH will _____.

A. increase; remain the same

B. increase; increase

C. decrease; remain the same

D. decrease; increase

ANSWER: D.

TOPIC: 291004
KNOWLEDGE: K1.06 [3.3/3.3]
QID: B2518 (P2222)

Refer to the drawing of a cooling water system (see figure below).

The available net positive suction head for the centrifugal pump will be decreased by...

A. increasing surge tank level by 5 percent.

B. throttling heat exchanger service water valve B more open.

C. throttling pump discharge valve C more closed.

D. increasing the heat loads on the cooling water system.

ANSWER: D.

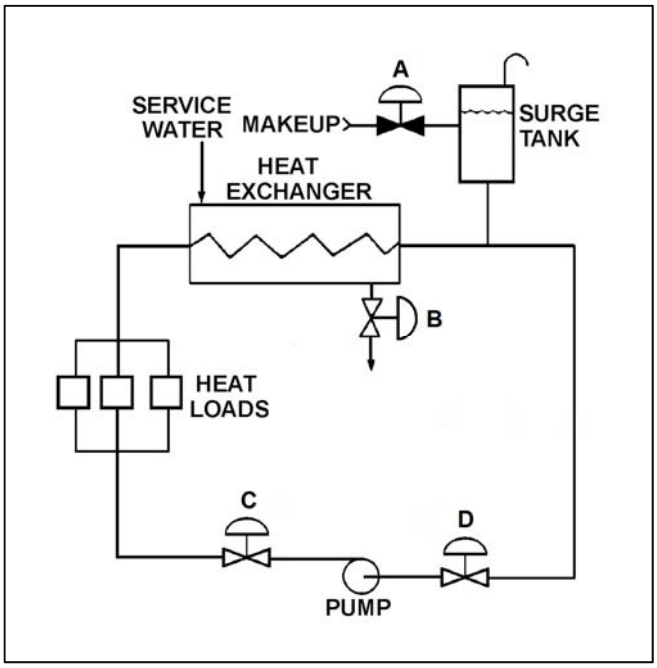

TOPIC: 291004
KNOWLEDGE: K1.06 [3.3/3.3]
QID: B2621 (P2621)

A cooling water pump is operating with pump suction parameters as follows:

Suction Temperature = 124°F
Suction Pressure = 11.7 psia

What is the approximate available net positive suction head (NPSH) for the pump? (Neglect the contribution of the suction fluid velocity to NPSH.)

A. 23 feet

B. 27 feet

C. 31 feet

D. 35 feet

ANSWER: A.

TOPIC: 291004
KNOWLEDGE: K1.06 [3.3/3.3]
QID: B2920 (P2921)

Refer to the drawing of an operating cooling water system (see figure below).

Which one of the following will increase the available net positive suction head for the centrifugal pump?

A. Draining the surge tank to decrease level by 10 percent.

B. Positioning the service water valve B more closed.

C. Positioning the pump discharge valve C more open.

D. Reducing the heat loads on the cooling water system.

ANSWER: D.

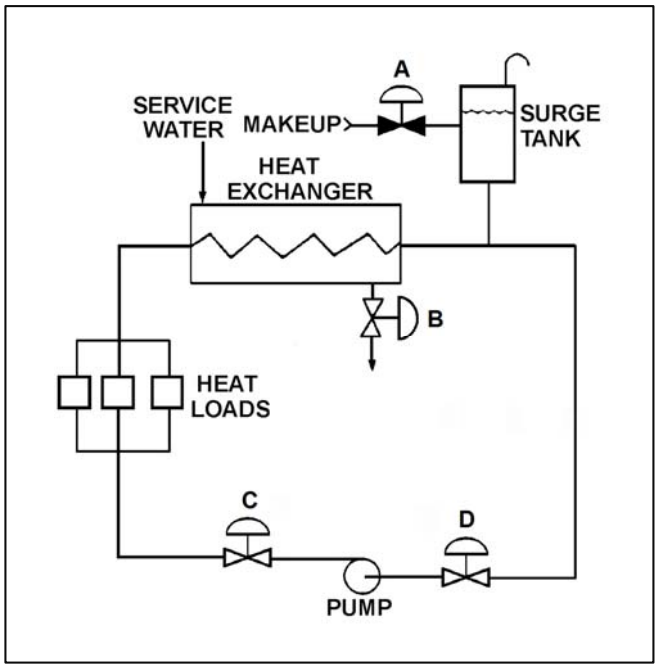

TOPIC: 291004
KNOWLEDGE: K1.06 [3.3/3.3]
QID: B3219 (P3221)

A centrifugal pump is taking suction on an open storage tank that has been filled to a level of 40 feet with 10,000 gallons of 60°F water. The pump is located at the base of the tank, takes a suction from the bottom of the tank, and discharges to a lake.

Given:

- The pump is currently operating at its design flow rate of 200 gpm and a total developed head of 150 feet.
- The pump requires 4 feet of net positive suction head.

How will the centrifugal pump flow rate be affected as the water storage tank level decreases?

A. Flow rate will remain constant until the pump begins to cavitate at a tank level of about 4 feet.

B. Flow rate will remain constant until the pump becomes air bound when the tank empties.

C. Flow rate will gradually decrease until the pump begins to cavitate at a tank level of about 4 feet.

D. Flow rate will gradually decrease until the pump becomes air bound when the tank empties.

ANSWER: D.

TOPIC: 291004
KNOWLEDGE: K1.06 [3.3/3.3]
QID: B4011 (P4010)

Refer to the drawing below of a centrifugal pump taking suction from the bottom of an open storage tank containing water at 66°F. Pump and water level elevations are indicated in the figure. Assume standard atmospheric pressure.

Assuming that pump suction head loss is negligible, what is the approximate value of net positive suction head available to the pump?

A. 6 feet

B. 13 feet

C. 20 feet

D. 25 feet

ANSWER: C.

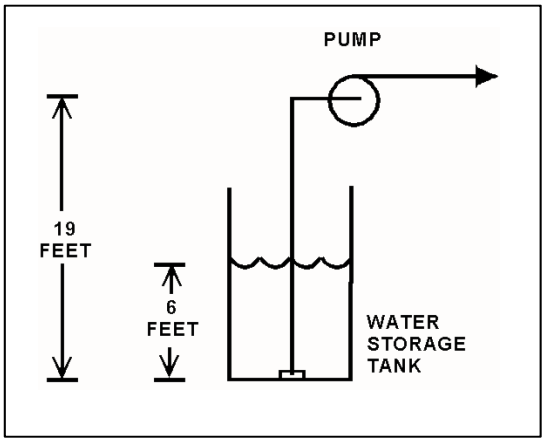

TOPIC: 291004
KNOWLEDGE: K1.06 [3.3/3.3]
QID: B4113 (P4110)

Refer to the drawing of an elevated centrifugal pump taking suction from the bottom of an open storage tank containing water at 66°F (see figure below). Assume standard atmospheric pressure.

The pump requires 4.0 ft-lbf/lbm of net positive suction head (NPSH). Assume that pump suction head loss is negligible.

If tank water level is allowed to decrease continuously, at what approximate water level will the pump begin to cavitate?

A. 34 feet

B. 29 feet

C. 21 feet

D. 16 feet

ANSWER: C.

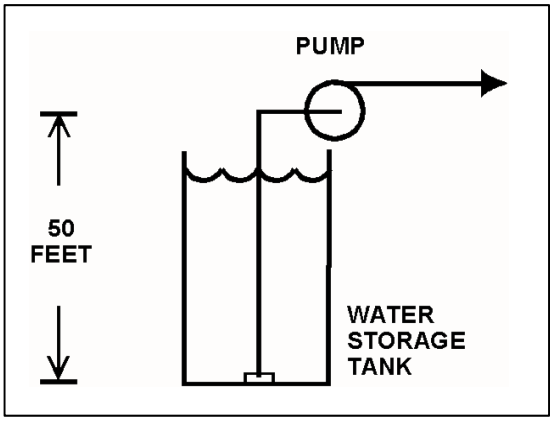

TOPIC: 291004
KNOWLEDGE: K1.06 [3.3/3.3]
QID: B4410 (P4410)

Refer to the drawing of a centrifugal pump taking suction from the bottom of an open storage tank containing water at 66°F (see figure below). Pump and water level elevations are indicated in the figure. Assume standard atmospheric pressure.

Assuming that pump suction head loss is negligible, what is the approximate value of net positive suction head available to the pump?

A. 6 feet

B. 12 feet

C. 39 feet

D. 45 feet

ANSWER: D.

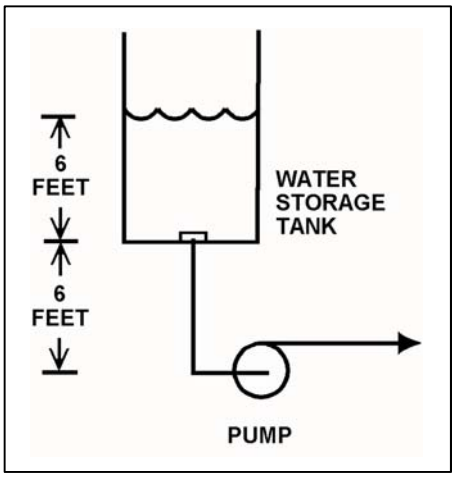

TOPIC: 291004
KNOWLEDGE: K1.06 [3.3/3.3]
QID: B4710 (P4712)

A centrifugal cooling water pump is operating in an open system with its discharge valve fully open. If the discharge valve is repositioned to 50 percent open, the pump's available net positive suction head (NPSH) will _____; and the pump's required NPSH will _____.

A. remain the same; decrease

B. remain the same; remain the same

C. increase; decrease

D. increase; remain the same

ANSWER: C.

TOPIC: 291004
KNOWLEDGE: K1.06 [3.3/3.3]
QID: B5210 (P5211)

Consider a centrifugal pump that is taking suction from the bottom of an open water storage tank. (See figure below.)

Given:

- The tank contains 60°F water.
- The eye of the pump impeller is located 50 feet above the bottom of the tank.
- The pump requires a minimum net positive suction head of 4 feet.

Which one of the following describes the effect on pump operation if tank water level is allowed to continuously decrease?

A. The pump will operate normally until tank water level decreases below approximately 20 feet, at which time the pump will cavitate.

B. The pump will operate normally until tank water level decreases below approximately 16 feet, at which time the pump will cavitate.

C. The pump will operate normally until the pump suction becomes uncovered, at which time the pump will cavitate.

D. The pump will operate normally until the pump suction becomes uncovered, at which time the pump will become air bound.

ANSWER: A.

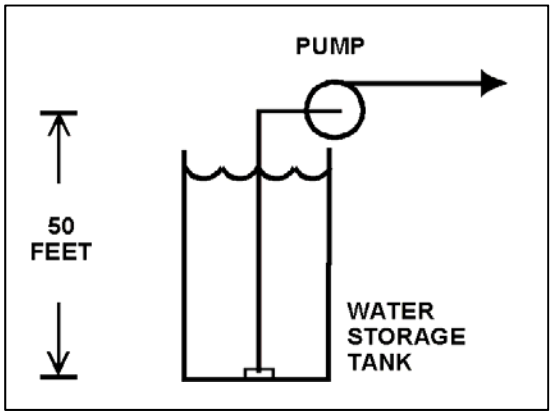

TOPIC: 291004
KNOWLEDGE: K1.06 [3.3/3.3]
QID: B5510 (P5511)

Refer to the drawing of a steam condenser, hotwell, and condensate pump (see figure below).

Given the following:

- The eye of the pump impeller is located 6.0 feet below the bottom of the hotwell.
- The pump requires 10.0 ft-lbf/lbm of net positive suction head (NPSH).
- Condenser pressure is 1.2 psia.
- Hotwell water temperature is 90°F.
- Pump suction head losses are zero.

What is the minimum hotwell water level necessary to provide the required NPSH?

A. 1.2 feet

B. 2.8 feet

C. 4.0 feet

D. 5.2 feet

ANSWER: B.

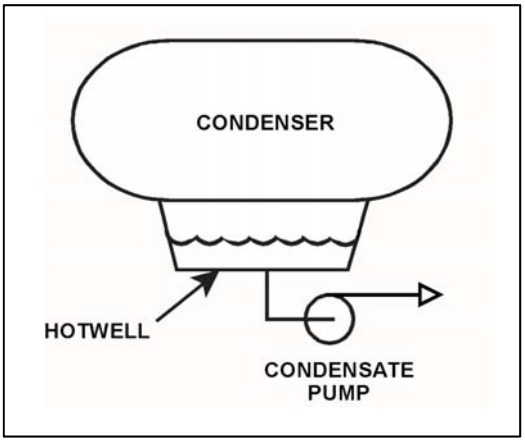

TOPIC: 291004
KNOWLEDGE: K1.06 [3.3/3.3]
QID: B5610 (P5611)

A centrifugal pump is taking suction on a water storage tank and delivering the makeup water to a cooling water system. The pump will have the lowest net positive suction head requirement if the pump is operated at a relatively _____ speed with a _____ discharge flow control valve.

A. high; fully open

B. high; throttled

C. low; fully open

D. low; throttled

ANSWER: D.

TOPIC: 291004
KNOWLEDGE: K1.06 [3.3/3.3]
QID: B5810 (P5810)

Refer to the drawing below of a centrifugal pump taking suction from the bottom of an open storage tank containing water at 75°F. Pump and water level elevations are indicated in the figure. Assume standard atmospheric pressure.

Assuming that pump suction head loss is negligible, what is the approximate value of net positive suction head available to the pump.

A. 5 feet

B. 10 feet

C. 17 feet

D. 23 feet

ANSWER: D.

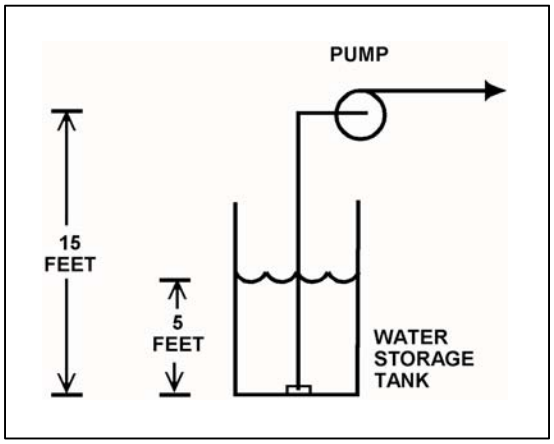

TOPIC: 291004
KNOWLEDGE: K1.06 [3.3/3.3]
QID: B5911 (P5910)

Refer to the drawing of a steam condenser, hotwell, and condensate pump (see figure below).

Given the following initial conditions:

- Condenser pressure is 1.2 psia.
- Condensate temperature is 96°F.
- Hotwell level is 10 feet above the condensate pump suction.

Which one of the following will provide the greatest increase in NPSH available to the condensate pump? (Assume that condenser pressure does not change.)

A. Hotwell level decreases by 6 inches.

B. Hotwell level increases by 6 inches.

C. Condensate temperature decreases by 6°F.

D. Condensate temperature increases by 6°F.

ANSWER: B.

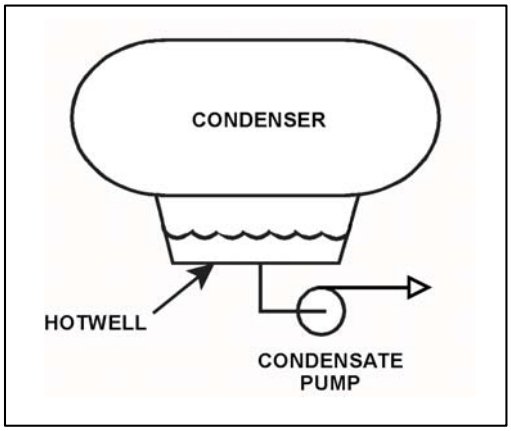

TOPIC: 291004
KNOWLEDGE: K1.06 [3.3/3.3]
QID: B6211 (P6211)

A centrifugal pump is taking suction on a water storage tank and discharging through a flow control valve. The pump will have the highest net positive suction head requirement if the pump is operated at a _____ speed with a _____ discharge flow control valve.

A. high; fully open

B. high; throttled

C. low; fully open

D. low; throttled

ANSWER: A.

TOPIC: 291004
KNOWLEDGE: K1.06 [3.3/3.3]
QID: B6410 (P6410)

An operating centrifugal pump has a net positive suction head (NPSH) requirement of 150 ft-lbf/lbm. Water at 300°F is entering the pump. Which one of the following is the lowest listed pump inlet pressure that will provide adequate NPSH for the pump?

A. 60 psia

B. 83 psia

C. 108 psia

D. 127 psia

ANSWER: D.

TOPIC: 291004
KNOWLEDGE: K1.06 [3.3/3.3]
QID: B6510 (P6510)

Refer to the drawing of a steam condenser, hotwell, and condensate pump (see figure below).

Given the following:

- The eye of the pump impeller is located 6.0 feet below the bottom of the hotwell.
- Hotwell water level is 6.0 feet.
- Hotwell water temperature is 90°F.
- Condenser pressure is 1.3 psia.
- Fluid velocity and friction head losses are zero.

What is the net positive suction head available to the condensate pump?

A. 6.0 feet

B. 7.4 feet

C. 12.0 feet

D. 13.4 feet

ANSWER: D.

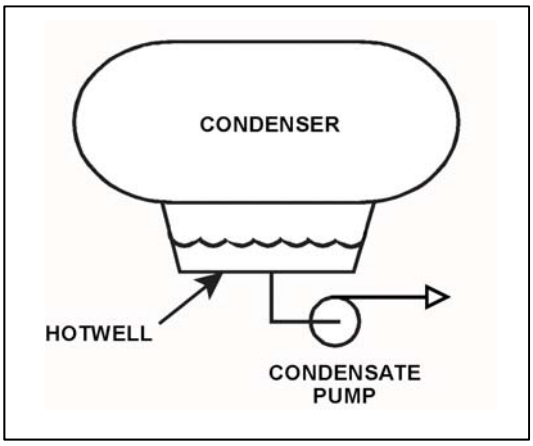

TOPIC: 291004
KNOWLEDGE: K1.06 [3.3/3.3]
QID: B6811 (P6810)

The current conditions for a centrifugal water pump are as follows:

Pump suction pressure = 140 psia
Pump suction temperature = 300°F

The pump requires a net positive suction head (NPSH) of 150 ft-lbf/lbm for pumping water at 300°F. Which one of the following is the lowest pump suction pressure that will provide the required NPSH for the current conditions?

A. 132 psia

B. 127 psia

C. 73 psia

D. 67 psia

ANSWER: B.

TOPIC: 291004
KNOWLEDGE: K1.06 [3.3/3.3]
QID: B6911 (P6911)

A centrifugal pump is taking suction from an open water storage tank. The pump is located at the base of the tank, takes a suction from the bottom of the tank, and discharges to a pressurized system.

Given:

- The tank is filled to a level of 26 feet with 60°F water.
- The pump is currently operating at 50 gpm.
- The pump requires 30 feet of net positive suction head.

Which one of the following describes the current pump status, and how the pump flow rate will be affected as the level in the storage tank decreases?

A. The pump is currently cavitating; pump flow rate will decrease continuously as tank level decreases.

B. The pump is currently cavitating; pump flow rate will remain about the same until the tank empties.

C. The pump is currently <u>not</u> cavitating; pump flow rate will gradually decrease with tank level and then rapidly decrease when cavitation begins at a lower tank level.

D. The pump is currently <u>not</u> cavitating; pump flow rate will gradually decrease with tank level and then rapidly decrease as the pump becomes air bound when the tank empties.

ANSWER: D.

TOPIC: 291004
KNOWLEDGE: K1.06 [3.3/3.3]
QID: B7112 (P7110)

Refer to the drawing of a centrifugal pump taking suction from a reservoir.

The pump is located on shore, with the eye of the pump 4 feet higher than the reservoir water level. The pump's suction line extends 4 feet below the surface of the reservoir. Which one of the following modifications would increase the pump's available net positive suction head? (Assume the reservoir is at a uniform temperature and ignore any changes in suction line head loss due to friction.)

A. Raise the pump and suction line by 2 feet.

B. Lower the pump and suction line by 2 feet.

C. Lengthen the suction line to take a suction from 2 feet deeper.

D. Shorten the suction line to take a suction from 2 feet shallower.

ANSWER: B.

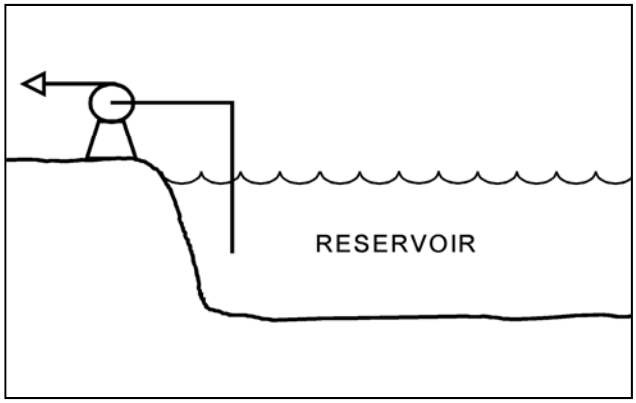

TOPIC: 291004
KNOWLEDGE: K1.07 [2.8/2.8]
QID: B115 (P1924)

A constant-speed radial-flow centrifugal pump motor draws the least current when the pump is...

A. at maximum rated flow conditions.

B. operating on recirculation flow only.

C. accelerating to normal speed during start.

D. at shutoff head with no recirculation flow.

ANSWER: D.

TOPIC: 291004
KNOWLEDGE: K1.07 [2.8/2.8]
QID: B119

A centrifugal pump is initially operating at normal discharge pressure and flow conditions with the pump discharge valve fully open. Then, the discharge valve is throttled to the 50 percent open position. Which one of the following parameter changes will occur when the discharge valve is throttled?

A. Pump motor current decreases.

B. Pump flow rate increases.

C. Pump discharge head decreases.

D. Available net positive suction head decreases.

ANSWER: A.

TOPIC: 291004
KNOWLEDGE: K1.07 [2.8/2.8]
QID: B419 (P1824)

Refer to the drawing of a cooling water system (see figure below).

The centrifugal pump was initially circulating water at 100°F. Over several hours, the water temperature increased to 200°F. Assuming system flow rate (gpm) was constant, pump motor amps _____ during the heatup because _____.

A. decreased; water density decreased

B. increased; water density decreased

C. decreased; pump shaft speed increased

D. increased; pump shaft speed increased

ANSWER: A.

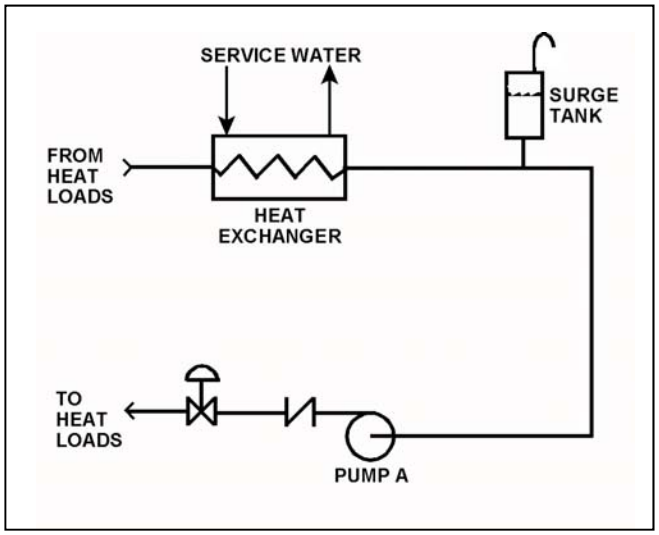

TOPIC: 291004
KNOWLEDGE: K1.07 [2.8/2.8]
QID: B922 (P1622)

An AC motor-driven centrifugal pump is circulating water at 180°F with a motor current of 100 amps. After several hours, system temperature has changed such that the water density has increased by 4 percent.

Assuming pump head and volumetric flow rate do not change, which one of the following is the new pump motor current?

A. 84 amps

B. 96 amps

C. 104 amps

D. 116 amps

ANSWER: C.

TOPIC: 291004
KNOWLEDGE: K1.07 [2.8/2.8]
QID: B1026

A motor-driven centrifugal pump exhibited indications of pump failure while being started. Which one of the following pairs of observations indicate that the pump failure is a sheared impeller shaft?

A. Excessive duration of high starting current and motor breaker trips.

B. Excessive duration of high starting current and no change in system flow rate.

C. Lower than normal running current and motor breaker trips.

D. Lower than normal running current and no change in system flow rate.

ANSWER: D.

TOPIC: 291004
KNOWLEDGE: K1.07 [2.8/2.8]
QID: B1726

A cooling water pump is being driven by an AC induction motor. Which one of the following describes how and why pump motor current will change if the pump shaft shears?

A. Decreases, due to decreased pump work.

B. Decreases, due to decreased counter electromotive force.

C. Increases, due to increased pump work.

D. Increases, due to decreased counter electromotive force.

ANSWER: A.

TOPIC: 291004
KNOWLEDGE: K1.07 [2.8/2.8]
QID: B2020 (P2023)

A reactor recirculation pump is circulating reactor coolant at 150°F. After several hours the reactor coolant temperature has increased to 200°F.

Assuming recirculation pump flow rate (gpm) is constant, recirculation pump motor amps will have _____ because _____.

A. decreased; coolant density has decreased

B. decreased; system head losses have increased

C. increased; coolant density has increased

D. increased; system head losses have decreased

ANSWER: A.

TOPIC: 291004
KNOWLEDGE: K1.07 [2.8/2.8]
QID: B2219 (P1420)

An AC motor-driven centrifugal pump was initially circulating water at 150°F in a cooling water system. Over several hours, the circulating water temperature decreased to 100°F. Assuming system flow rate (gpm) remained constant, pump motor current _____ because _____ increased.

A. increased; water density

B. increased; motor efficiency

C. decreased; water density

D. decreased; motor efficiency

ANSWER: A.

TOPIC: 291004
KNOWLEDGE: K1.07 [2.8/2.8]
QID: B2423 (P2124)

A centrifugal pump in a cooling water system is circulating water at 180°F with a motor current of 200 amps. After several hours, system temperature has changed such that the water density has increased by 3 percent.

Assuming pump head remains the same, which one of the following is the new pump motor current?

A. 203 amps

B. 206 amps

C. 218 amps

D. 236 amps

ANSWER: B.

TOPIC: 291004
KNOWLEDGE: K1.07 [2.8/2.8]
QID: B2520 (P2520)

A constant-speed centrifugal pump motor draws the most current when the pump is...

A. at maximum rated flow conditions.

B. operating at runout flow.

C. accelerating to normal speed during start.

D. at shutoff head with no recirculation flow.

ANSWER: C.

TOPIC: 291004
KNOWLEDGE: K1.07 [2.8/2.8]
QID: B2822 (P2821)

An AC motor-driven centrifugal pump was just started. During the start, motor current remained peaked for 6 seconds before decreasing to standard running current. Normally, the starting current peak lasts about 4 seconds.

Which one of the following could have caused the extended starting current peak?

A. The pump shaft was seized and did not turn.

B. The pump was initially rotating slowly in the reverse direction.

C. The pump discharge check valve was stuck closed and did not open.

D. The pump was initially air bound, and then primed itself after 6 seconds of operation.

ANSWER: B.

TOPIC: 291004
KNOWLEDGE: K1.07 [2.8/2.8]
QID: B2921 (P2925)

A centrifugal pump is circulating water at 180°F with a pump motor current of 200 amps. After several hours, system temperature has changed such that the water density has increased by 6 percent.

Assuming pump head and volumetric flow rate do not change, which one of the following is the new pump motor current?

A. 203 amps

B. 206 amps

C. 212 amps

D. 224 amps

ANSWER: C.

TOPIC: 291004
KNOWLEDGE: K1.07 [2.8/2.8]
QID: B3820 (P3822)

An AC motor-driven centrifugal water pump was just started. During the start, motor current remained peaked for 2 seconds, and then decreased and stabilized at about one-fifth the standard running current. Normally, the starting current peak lasts about 4 seconds.

Which one of the following could have caused the abnormal start indications above?

A. The pump shaft was initially seized and the motor breaker opened.

B. The pump was initially rotating slowly in the reverse direction.

C. The pump was initially air bound, and then primed itself after 2 seconds of operation.

D. The coupling between the motor and pump shafts was left disconnected after maintenance.

ANSWER: D.

TOPIC: 291004
KNOWLEDGE: K1.07 [2.8/2.8]
QID: B4811 (P4811)

A radial-flow centrifugal cooling water pump is driven by an AC induction motor. The pump can supply cooling water to several heat loads, all of which are in parallel alignment. The following pump conditions initially exist:

Pump motor current	=	100 amps
Pump flow rate	=	400 gpm
Pump suction temperature	=	70°F

Four hours later, the motor is drawing 95 amps. Which one of the following could be responsible for the observed decrease in motor amps?

A. The temperature of the cooling water being pumped decreased to 60°F with no change in pump flow rate.

B. The temperature of the cooling water being pumped increased to 80°F with no change in pump flow rate.

C. Cooling water flow was established to an additional heat load with no change in the temperature of the cooling water being pumped.

D. Cooling water flow was isolated from an out-of-service heat load with no change in the temperature of the cooling water being pumped.

ANSWER: D.

TOPIC: 291004
KNOWLEDGE: K1.07 [2.8/2.8]
QID: B6311 (P6310)

A radial-flow centrifugal cooling water pump is driven by an AC induction motor. The pump can supply cooling water to several heat loads, all of which are in parallel alignment. The following pump conditions initially exist:

Pump motor current	=	100 amps
Pump flow rate	=	400 gpm
Pump suction temperature	=	70°F

Four hours later, the motor is drawing 105 amps. Which one of the following could be responsible for the observed increase in motor current?

A. The temperature of the cooling water being pumped decreased to 60°F with no change in pump flow rate.

B. The temperature of the cooling water being pumped increased to 80°F with no change in pump flow rate.

C. Cooling water flow was established to an additional heat load with no change in the temperature of the cooling water being pumped.

D. Cooling water flow was isolated from an out-of-service heat load with no change in the temperature of the cooling water being pumped.

ANSWER: C.

TOPIC: 291004
KNOWLEDGE: K1.08 [2.8/2.8]
QID: B519

Many large centrifugal pumps are interlocked so that the pump will not start unless its discharge valve is at least 90 percent closed. This interlock is provided to minimize the...

A. duration of the pump motor starting current.

B. required net positive suction head.

C. loading on the pump thrust bearing.

D. pump discharge pressure.

ANSWER: A.

TOPIC: 291004
KNOWLEDGE: K1.08 [2.8/2.8]
QID: B619

Which one of the following pumps should be started with its discharge valve throttled?

A. Centrifugal

B. Gear

C. Reciprocating

D. Screw

ANSWER: A.

TOPIC: 291004
KNOWLEDGE: K1.08 [2.8/2.8]
QID: B821 (P2622)

Which one of the following contains two reasons for starting a typical radial-flow centrifugal pump with the discharge piping full of water and the discharge valve closed?

A. Prevent pump runout and prevent motor overspeed.

B. Prevent pump runout and ensure lubrication of pump seals.

C. Prevent water hammer and ensure adequate pump recirculation flow.

D. Prevent water hammer and prevent excessive duration of starting current.

ANSWER: D.

TOPIC: 291004
KNOWLEDGE: K1.08 [2.8/2.8]
QID: B1822 (P1325)

Some large centrifugal pumps are interlocked so that the pump will not start unless its discharge valve is at least 90 percent closed. This interlock is provided to minimize...

A. pump discharge pressure.

B. heating of the pumped fluid.

C. the potential for cavitation at the pump suction.

D. the duration of the pump motor starting current.

ANSWER: D.

TOPIC: 291004
KNOWLEDGE: K1.08 [2.8/2.8]
QID: B2120 (P624)

Which one of the following specifies the proper pump discharge valve position and the basis for that position when starting a large centrifugal pump?

A. Discharge valve fully open to reduce duration of motor starting current

B. Discharge valve throttled to reduce duration of motor starting current

C. Discharge valve fully open to ensure adequate pump net positive suction head

D. Discharge valve throttled to ensure adequate pump net positive suction head

ANSWER: B.

TOPIC: 291004
KNOWLEDGE: K1.11 [2.4/2.5]
QID: B520 (P2322)

A centrifugal fire water pump takes suction from an open storage tank and discharges through a fire hose. Which one of the following will cause the pump to operate at shutoff head?

A. The fire hose nozzle is raised to an elevation that prevents any flow.

B. Suction temperature is increased to the point that gas binding occurs.

C. Pump speed is adjusted to the value at which cavitation occurs.

D. Suction pressure is adjusted until available net positive suction head is reduced to zero feet.

ANSWER: A.

TOPIC: 291004
KNOWLEDGE: K1.11 [2.4/2.5]
QID: B1823 (P109)

When a centrifugal pump is operating at shutoff head, it is pumping at _____ capacity and _____ discharge head.

A. maximum; maximum

B. maximum; minimum

C. minimum; maximum

D. minimum; minimum

ANSWER: C.

TOPIC: 291004
KNOWLEDGE: K1.11 [2.4/2.5]
QID: B2018 (P2022)

A variable-speed centrifugal fire water pump is taking a suction on an open storage tank and discharging through a 4-inch diameter fire hose and through a nozzle located 50 feet above the pump.

Which one of the following will cause the pump to operate at shutoff head?

A. The fire hose is replaced with a 6-inch diameter fire hose.

B. The fire hose is replaced with a 2-inch diameter fire hose.

C. Pump speed is increased until steam formation at the eye of the pump prevents pump flow.

D. Pump speed is decreased until pump discharge pressure is insufficient to cause flow.

ANSWER: D.

TOPIC: 291004
KNOWLEDGE: K1.11 [2.4/2.5]
QID: B2121 (P1523)

Which one of the following describes centrifugal pump operating parameters at shutoff head?

A. High discharge pressure, low flow, low power demand

B. High discharge pressure, high flow, low power demand

C. Low discharge pressure, low flow, high power demand

D. Low discharge pressure, high flow, high power demand

ANSWER: A.

TOPIC: 291004
KNOWLEDGE: K1.11 [2.4/2.5]
QID: B2721 (P2721)

A centrifugal fire water pump takes suction from an open storage tank and discharges through a fire hose. Which one of the following will cause the pump to operate at shutoff head?

A. A firefighter inadvertently severs the fire hose.

B. The fire hose becomes completely crimped in a fire door.

C. Fire water storage tank level drops below the pump suction tap.

D. A firefighter adjusts the fire hose nozzle spray pattern from DELUGE to FOG.

ANSWER: B.

TOPIC: 291004
KNOWLEDGE: K1.11 [2.4/2.5]
QID: B3320 (P2820)

A centrifugal fire water pump takes suction from an open storage tank and discharges through a fire hose. Which one of the following will cause the pump to operate at shutoff head?

A. A firefighter inadvertently severs the fire hose.

B. The fire hose becomes partially crimped in a fire door.

C. Fire water storage tank level drops below the pump suction tap.

D. A firefighter adjusts the fire hose nozzle spray pattern from DELUGE to OFF.

ANSWER: D.

TOPIC: 291004
KNOWLEDGE: K1.12 [2.8/2.8]
QID: B23

Which one of the following will occur if a motor-driven centrifugal pump is operated continuously at runout conditions?

A. Pump failure, due to excessive pump cavitation.

B. Pump failure, due to overheating caused by the increased impeller-to-casing friction.

C. Motor failure, due to excessive current being drawn through the motor windings.

D. Motor failure, due to overheating caused by increased windage losses.

ANSWER: C.

TOPIC: 291004
KNOWLEDGE: K1.12 [2.8/2.8]
QID: B321

A centrifugal pump is operating at rated conditions in an open system. If a system transient results in the pump operating at runout, which one of the following indications will be present?

A. Increased discharge pressure

B. Decreased pump motor current

C. Increased pump vibration

D. Decreased pump flow rate

ANSWER: C.

TOPIC: 291004
KNOWLEDGE: K1.12 [2.8/2.8]
QID: B424

Operating a motor-driven centrifugal pump under "pump runout" conditions causes...

A. pump overheating, cavitation, and ultimately pump failure.

B. excessive motor current to be drawn, damage to the motor windings, and ultimately motor failure.

C. excessive motor current to be drawn, overheating of pump and motor bearings, and ultimately pump failure.

D. no damage, because most pumps and motors are designed to operate without failure under pump runout conditions.

ANSWER: B.

TOPIC: 291004
KNOWLEDGE: K1.12 [2.8/2.8]
QID: B1024 (P1721)

Refer to the drawing of centrifugal pump and system operating curves (see figure below).

Which point represents pump operation at runout conditions?

A. Point A

B. Point B

C. Point C

D. Point D

ANSWER: C.

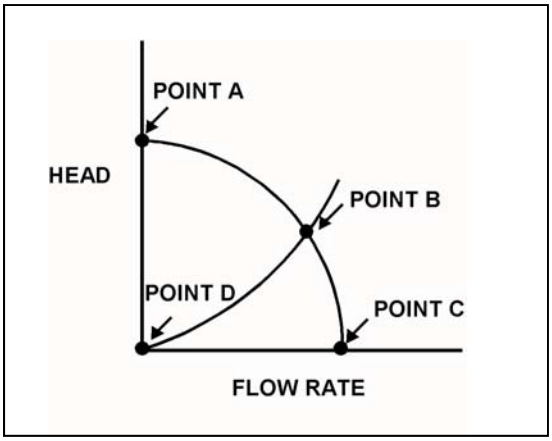

TOPIC: 291004
KNOWLEDGE: K1.12 [2.8/2.8]
QID: B1323 (P1623)

A centrifugal pump is operating at its maximum design flow rate, delivering water through two parallel valves. Valve A is half open, and valve B is one quarter open.

Which one of the following will occur if both valves are fully opened?

A. The pump will operate at shutoff head.

B. The pump available net positive suction head will increase.

C. The pump required net positive suction head will decrease.

D. The pump will operate at runout conditions.

ANSWER: D.

TOPIC: 291004
KNOWLEDGE: K1.12 [2.8/2.8]
QID: B1425

What adverse effect is caused by operating a motor-driven centrifugal pump under runout conditions?

A. Pump failure, due to overspeed of the pump impeller.

B Pump failure, due to excessive pump cavitation.

C Motor failure, due to excessive motor winding current.

D Motor failure, due to loss of cooling from pumped fluid.

ANSWER: C.

TOPIC: 291004
KNOWLEDGE: K1.12 [2.8/2.8]
QID: B1920 (P1123)

Which one of the following describes typical radial-flow centrifugal pump runout conditions?

A. High discharge pressure, low flow, high power demand

B. High discharge pressure, high flow, low power demand

C. Low discharge pressure, low flow, low power demand

D. Low discharge pressure, high flow, high power demand

ANSWER: D.

TOPIC: 291004
KNOWLEDGE: K1.12 [2.8/2.8]
QID: B3910 (P3910)

Refer to the drawing of a cooling water system in which only centrifugal pump A is operating and the common pump discharge valve is currently 90 percent open (see figure below).

An abnormal total heat load on the cooling water system is causing pump A to approach operation at runout conditions. Which one of the following will cause pump A to operate farther away from runout conditions? (Assume that satisfactory available net positive suction head is maintained at all times.)

A. Starting pump B.

B. Positioning the discharge valve to 100 percent open.

C. Raising the water level in the surge tank by 2 feet.

D. Decreasing heat exchanger service water flow rate by 10 percent.

ANSWER: A.

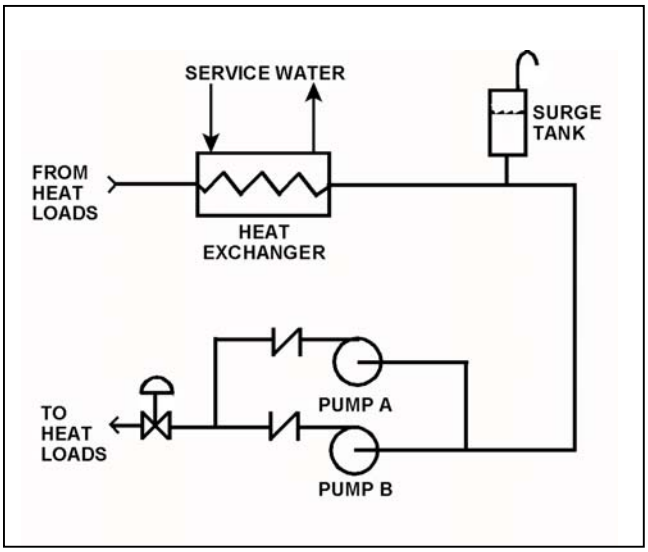

TOPIC: 291004
KNOWLEDGE: K1.12 [2.8/2.8]
QID: B5111 (P5111)

A flow-limiting venturi in the discharge piping of a centrifugal pump decreases the potential for the pump to experience...

A. runout

B. reverse flow

C. shutoff head

D. water hammer

ANSWER: A.

TOPIC: 291004
KNOWLEDGE: K1.13 [2.6/2.7]
QID: B325

Refer to the drawing of a cooling water system and the associated pump/system operating curves (see figure below).

Pumps A and B are identical single-speed centrifugal pumps and only pump A is operating. If pump B is started, system flow rate will be _____; and common pump discharge pressure will be _____.

A. the same; higher

B. higher; the same

C. the same; the same

D. higher; higher

ANSWER: D.

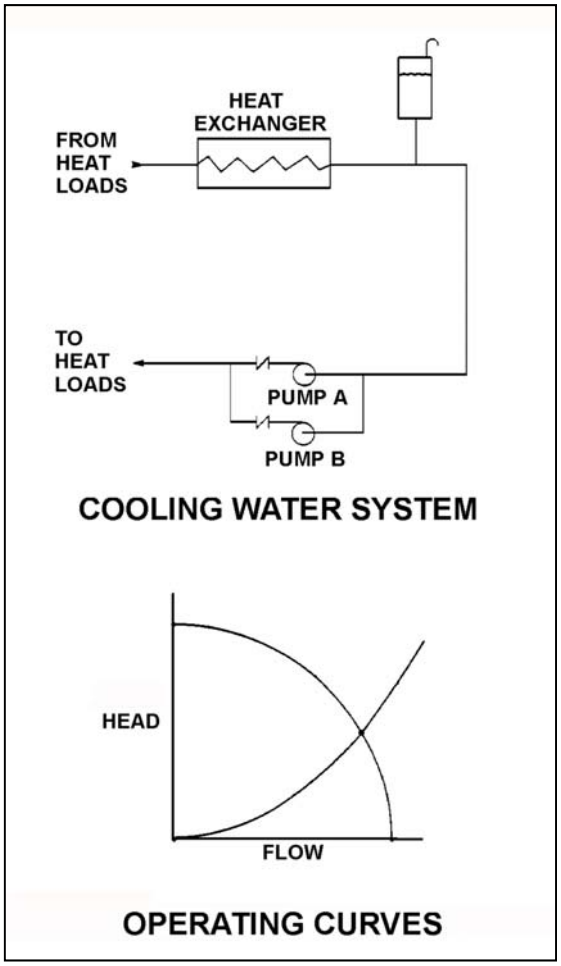

TOPIC: 291004
KNOWLEDGE: K1.13 [2.6/2.7]
QID: B521 (P2224)

A motor-driven centrifugal pump is operating in an open system with its discharge valve throttled to 50 percent. How will the pump be affected if the discharge valve is fully opened?

A. Total developed head decreases, and motor current decreases.

B. Total developed head increases, and available net positive suction head decreases.

C. The potential for pump cavitation decreases, and pump differential pressure decreases.

D. Available net positive suction head decreases, and pump differential pressure decreases.

ANSWER: D.

TOPIC: 291004
KNOWLEDGE: K1.13 [2.6/2.7]
QID: B622 (P2123)

A typical radial-flow centrifugal pump is operating at rated conditions in an open system with all valves fully open. If the pump discharge valve is throttled to 50 percent closed, pump discharge pressure will _____; and pump motor current will _____.

A. decrease; decrease

B. decrease; increase

C. increase; increase

D. increase; decrease

ANSWER: D.

TOPIC: 291004
KNOWLEDGE: K1.13 [2.6/2.7]
QID: B722 (P723)

Refer to the drawing of a lube oil temperature control system and the associated pump/system operating curves (see figure below).

The pump is operating at point B on the operating curve. If the temperature control valve modulates further closed, operating point B will be located on curve _____ closer to point _____.

A. 1; D

B. 2; A

C. 1; E

D. 2; C

ANSWER: B.

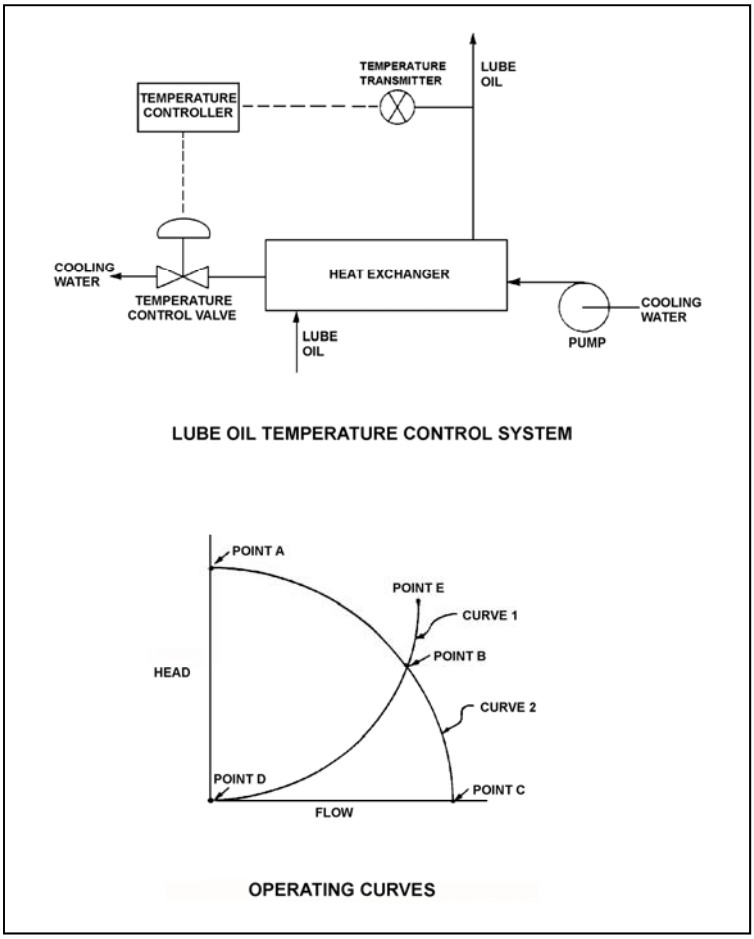

TOPIC: 291004
KNOWLEDGE: K1.13 [2.6/2.7]
QID: B823

Which one of the following actions will correct a cavitating centrifugal pump?

A. Increasing the pump speed

B. Lowering the pump suction pressure

C. Lowering the pump suction temperature

D. Cycling the pump off and on a few times

ANSWER: C.

TOPIC: 291004
KNOWLEDGE: K1.13 [2.6/2.7]
QID: B1122

A centrifugal pump is operating at rated conditions in an open system. If the pump discharge valve is fully closed, pump discharge pressure will _____; and motor current will _____.

A. increase; decrease

B. decrease; decrease

C. increase; increase

D. decrease; increase

ANSWER: A.

TOPIC: 291004
KNOWLEDGE: K1.13 [2.6/2.7]
QID: B1423 (P623)

Refer to the drawing of a lube oil temperature control system and the associated pump/system operating curves (see figure below).

The pump is initially operating at point B. If the temperature control valve modulates further open, operating point B will be located on curve _____ closer to point _____.

A. 1; D

B. 2; A

C. 1; E

D. 2; C

ANSWER: D.

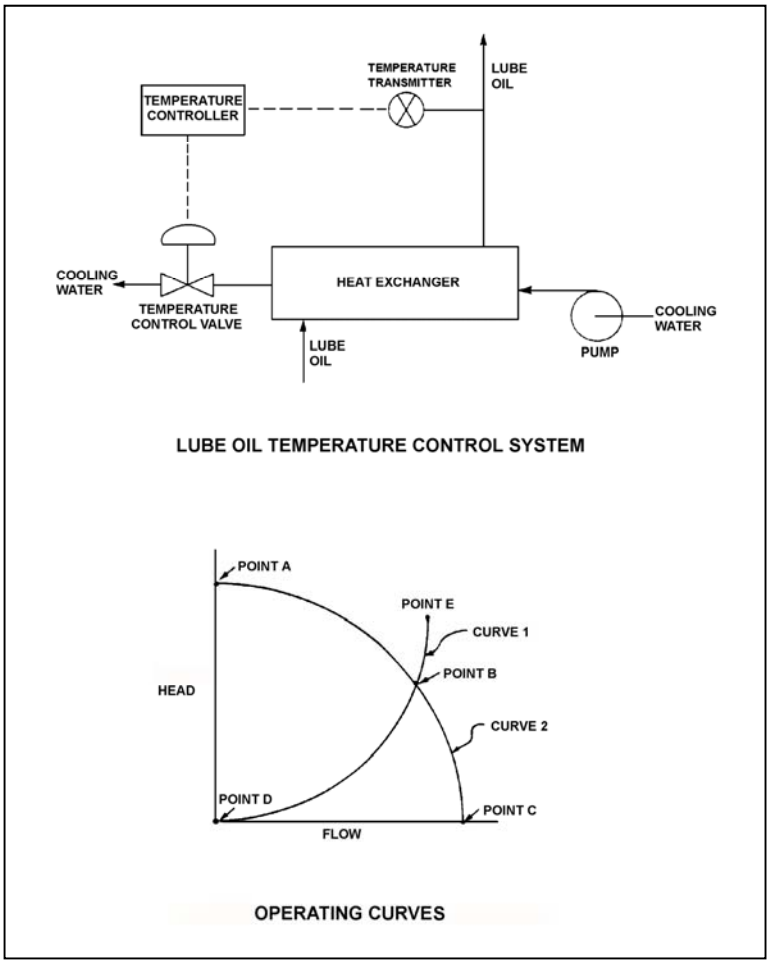

TOPIC: 291004
KNOWLEDGE: K1.13 [2.6/2.7]
QID: B1522

Which one of the following components of a centrifugal pump has the specific primary function of increasing the kinetic energy of a fluid?

A. Volute

B. Impeller

C. Diffuser

D. Discharge nozzle

ANSWER: B.

TOPIC: 291004
KNOWLEDGE: K1.13 [2.6/2.7]
QID: B1722 (P1725)

A typical single-stage radial-flow centrifugal pump is being returned to service following maintenance on its three-phase AC induction motor. Which one of the following will occur when the pump is started if two of the three motor power leads were inadvertently swapped during restoration?

A. The motor breaker will trip on instantaneous overcurrent.

B. The motor will <u>not</u> turn and will emit a humming sound.

C. The pump will rotate in the reverse direction with reduced or no flow rate.

D. The pump will rotate in the normal direction with reduced flow rate.

ANSWER: C.

TOPIC: 291004
KNOWLEDGE: K1.13 [2.6/2.7]
QID: B2323 (P2325)

Refer to the drawing of centrifugal pump and system operating curves (see figure below).

A centrifugal pump is initially operating at point B. If the pump speed is reduced by one-half, the new operating point will be located on curve _____ closer to point _____.

A. 1; D

B. 2; A

C. 1; E

D. 2; C

ANSWER: A.

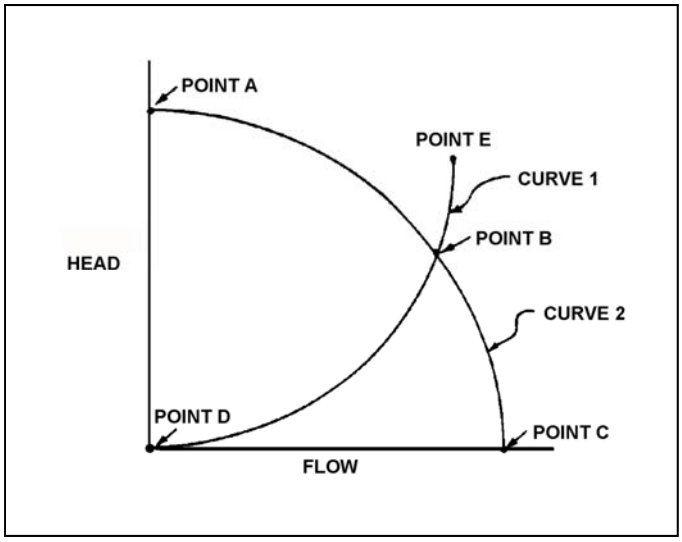

TOPIC: 291004
KNOWLEDGE: K1.13 [2.6/2.7]
QID: B2422 (P2422)

Refer to the drawing of a lube oil temperature control system (see figure below).

The pump is operating with the temperature control valve one-half open. If the temperature control valve modulates farther closed, system head loss will _____; and pump head will _____.

A. increase, decrease

B. increase, increase

C. decrease, decrease

D. decrease, increase

ANSWER: B.

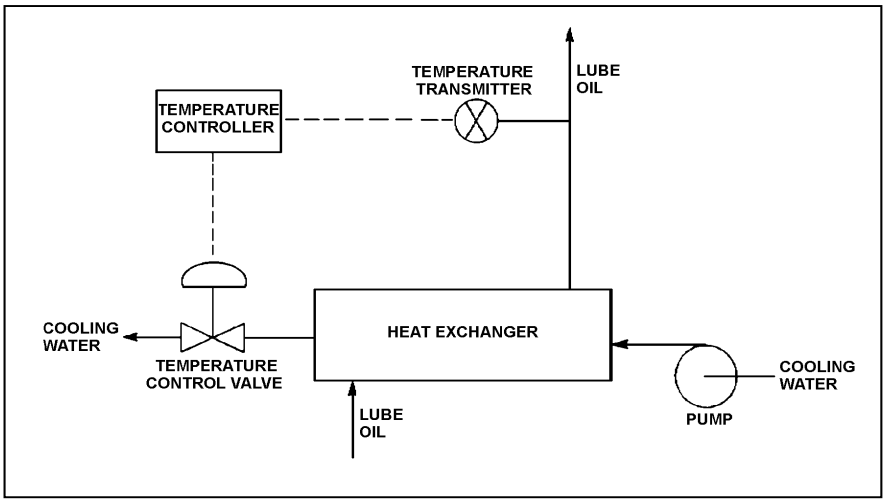

TOPIC: 291004
KNOWLEDGE: K1.13 [2.6/2.7]
QID: B2524 (P2523)

Refer to the drawing of a lube oil temperature control system and the associated pump/system operating curves (see figure below).

If the pump is initially operating at point B, how will the operating point change if the temperature controller setpoint is decreased by 10°F?

A. Operating point B will be located on curve 1 closer to point E.

B. Operating point B will be located on curve 1 closer to point D.

C. Operating point B will be located on curve 2 closer to point A.

D. Operating point B will be located on curve 2 closer to point C.

ANSWER: D.

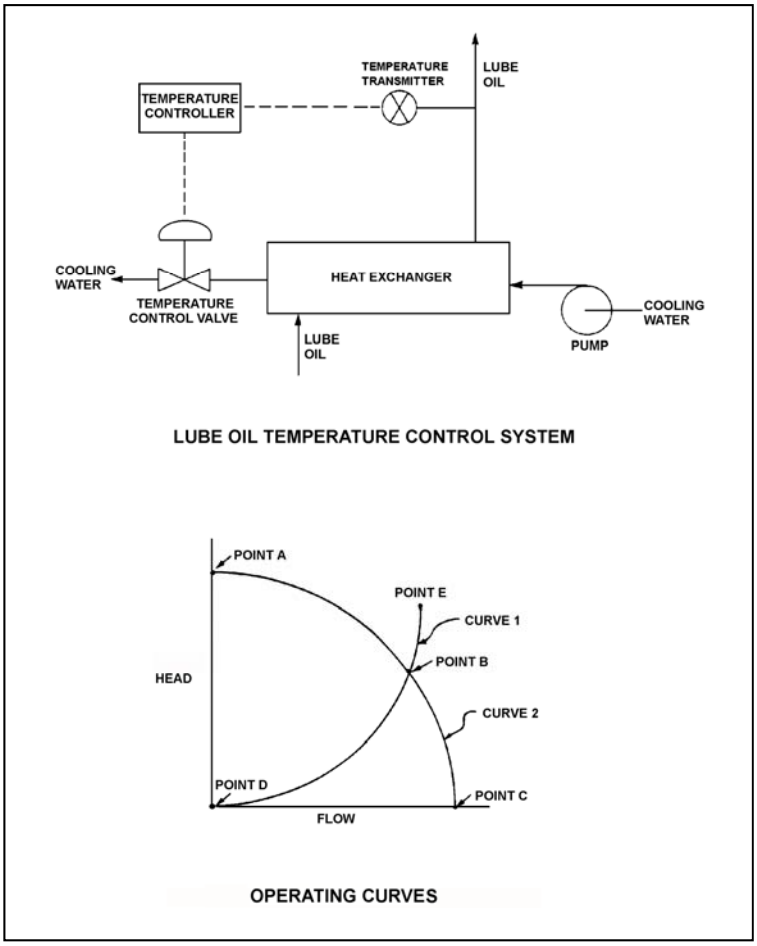

TOPIC: 291004
KNOWLEDGE: K1.13 [2.6/2.7]
QID: B2622 (P2624)

Which one of the following describes a reason for designing centrifugal pumps with suction nozzles that are larger than their discharge nozzles?

A. Increases total pump head by increasing the velocity head at the suction of the pump.

B. Increases the differential pressure across the pump by decreasing pump head loss.

C. Increases pump available net positive suction head by decreasing head loss at the pump suction.

D. Increases pump capacity by decreasing turbulence at the suction of the pump.

ANSWER: C.

TOPIC: 291004
KNOWLEDGE: K1.13 [2.6/2.7]
QID: B2623

Refer to the drawing of a cooling water system and the associated pump/system operating curves (see figure below).

Pumps A and B are identical single-speed centrifugal pumps and both pumps are operating. If pump B trips, after the system stabilizes, system flow rate will be...

A. more than one-half the original flow.

B. one-half the original flow.

C. less than one-half the original flow.

D. the same; only the pump head will change.

ANSWER: A.

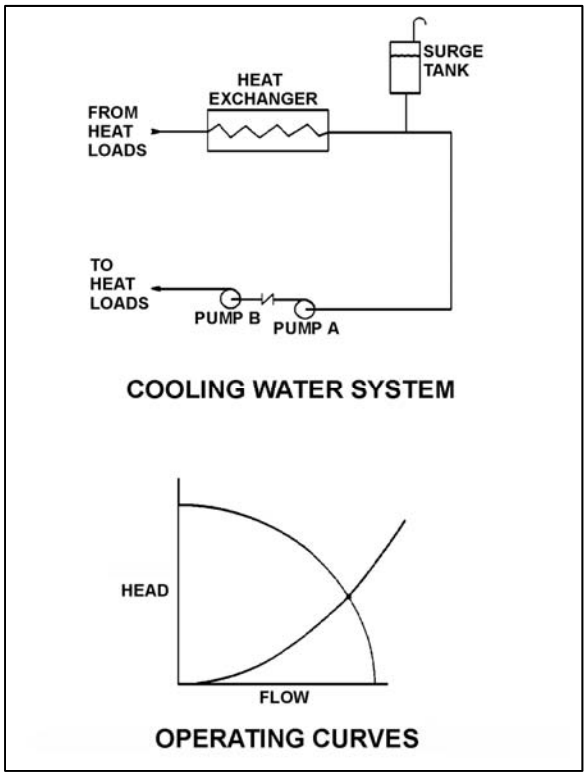

TOPIC: 291004
KNOWLEDGE: K1.13 [2.6/2.7]
QID: B3022 (P3020)

A centrifugal pump is needed to take suction on a water storage tank and deliver high pressure water to a water spray system. To minimize axial thrust on the pump shaft, the pump should have _____ stage(s); and to maximize the available NPSH at the impeller inlet, the pump should have a _____ suction impeller.

A. a single; single

B. a single; double

C. multiple opposed; single

D. multiple opposed; double

ANSWER: D.

TOPIC: 291004
KNOWLEDGE: K1.13 [2.6/2.7]
QID: B3522

A single-speed centrifugal pump is needed to supply river water to a storage facility. The pump must be capable of providing a very high flow rate at a low discharge pressure. Which one of the following types of centrifugal pumps is best suited for this application?

A. Single-stage, axial-flow

B. Single-stage, radial-flow

C. Multiple-stage, axial-flow

D. Multiple-stage, radial-flow

ANSWER: A.

TOPIC: 291004
KNOWLEDGE: K1.13 [2.6/2.7]
QID: B5812 (P5813)

Centrifugal pumps A and B are identical except that pump A uses a single-suction impeller while pump B uses a double-suction impeller. If both pumps are pumping water at the same inlet temperature, inlet pressure, and flow rate, single-suction pump A typically will have the _____ impeller axial thrust and the _____ required net positive suction head.

A. greater; greater

B. greater; smaller

C. smaller; greater

D. smaller; smaller

ANSWER: A.

TOPIC: 291004
KNOWLEDGE: K1.13 [2.6/2.7]
QID: B6012

A single-stage (single impeller) centrifugal pump and a two-stage (two impellers) centrifugal pump have identical head-capacity curves. The pumps are connected to identical suction and discharge piping in a water system.

Compared to the single-stage pump, the two-stage pump produces the same flow rate at about _____ pump discharge head; and for the same flow rate, the two-stage pump requires _____ net positive suction head.

A. twice the; less

B. twice the; more

C. the same; less

D. the same; more

ANSWER: C.

TOPIC: 291004
KNOWLEDGE: K1.13 [2.6/2.7]
QID: B6712 (P6711)

A centrifugal pump is located adjacent to the bottom of an open water storage tank. The pump is taking suction from a river and discharging to the bottom of the tank. Initially the tank was empty and the pump was operating at point B on the drawing below.

When tank water level reaches 30 feet, the new pump operating point will be located on curve _____ closer to point _____. (Assume that no other changes occur in the system.)

A. 1; D

B. 2; A

C. 1; E

D. 2; C

ANSWER: B.

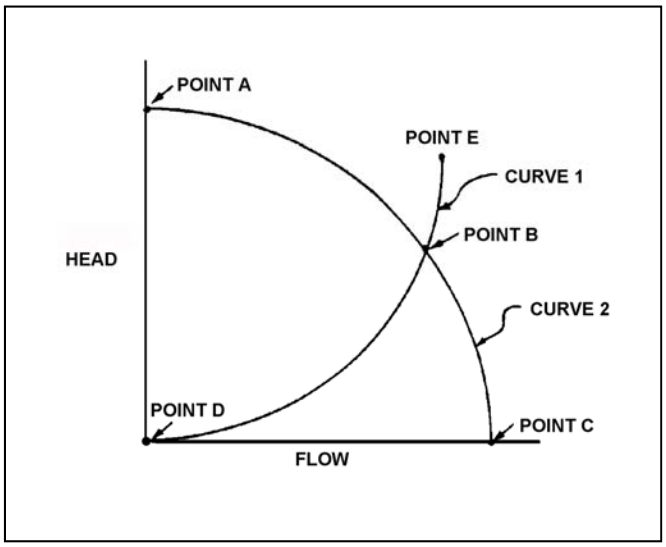

TOPIC: 291004
KNOWLEDGE: K1.13 [2.6/2.7]
QID: B7312 (P7310)

Refer to the drawing of centrifugal pump and system operating curves (see figure below).

Which one of the following describes the value of head where the two curves cross?

A. The maximum amount of head that the pump can provide.

B. The amount of pump head that is required to avoid cavitation.

C. The amount of pump head that is converted to kinetic energy in the pump.

D. The amount of pump head that is converted to heat and other losses as the water circulates through the system.

ANSWER: D.

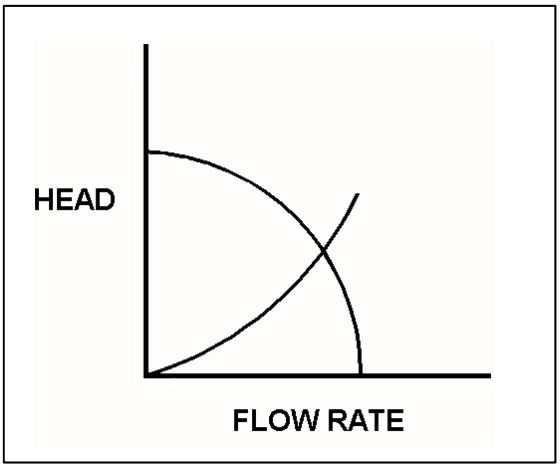

TOPIC: 291004
KNOWLEDGE: K1.14 [2.5/2.5]
QID: B24

A single-speed centrifugal fire pump takes suction on a water storage tank and discharges through a flexible fire hose. Which one of the following describes the response of the pump discharge flow rate?

A. Decreases as the level in the storage tank decreases

B. Increases as the height of the fire hose nozzle is increased

C. Remains constant as the level in the storage tank decreases

D. Remains constant as the height of the fire hose nozzle is increased

ANSWER: A.

TOPIC: 291004
KNOWLEDGE: K1.14 [2.5/2.5]
QID: B623

A centrifugal pump is operating at rated conditions in an open system with all valves fully open. If the pump suction valve is throttled to 50 percent closed, pump suction pressure will _____; and pump flow rate will _____.

A. increase; decrease

B. decrease; remain the same

C. increase; remain the same

D. decrease; decrease

ANSWER: D.

TOPIC: 291004
KNOWLEDGE: K1.14 [2.5/2.5]
QID: B723 (P724)

A centrifugal pump is operating normally in an open system. If the pump recirculation valve is opened farther, pump discharge pressure will _____; and pump flow rate will _____.

A. increase; decrease

B. decrease; increase

C. increase; increase

D. decrease; decrease

ANSWER: B.

TOPIC: 291004
KNOWLEDGE: K1.14 [2.5/2.5]
QID: B1123 (P826)

If the fully open discharge valve of a reciprocating positive displacement pump is closed approximately 10 percent, pump flow rate will _____; and pump head will _____. (Assume "ideal" pump response.)

A. decrease; increase

B. remain constant; increase

C. decrease; remain constant

D. remain constant; remain constant

ANSWER: B.

TOPIC: 291004
KNOWLEDGE: K1.14 [2.5/2.5]
QID: B1421 (P1421)

A centrifugal pump is operating normally in an open system with all valves fully open. If the pump discharge valve is throttled to 50 percent, pump suction pressure will _____; and pump discharge pressure will _____.

A. increase; decrease

B. decrease; increase

C. increase; increase

D. decrease; decrease

ANSWER: C.

TOPIC: 291004
KNOWLEDGE: K1.14 [2.5/2.5]
QID: B2722 (P2722)

A centrifugal pump is operating at maximum design flow rate, taking suction on a vented water storage tank and discharging through two parallel valves. Valve A is fully open and valve B is half open.

Which one of the following will occur if valve B is fully closed?

A. The pump will operate at shutoff head.

B. The pump will operate at runout conditions.

C. The pump available net positive suction head will increase.

D. The pump required net positive suction head will increase.

ANSWER: C.

TOPIC: 291004
KNOWLEDGE: K1.14 [2.5/2.5]
QID: B2825 (P2224)

A motor-driven centrifugal pump is operating in an open system with its discharge valve throttled to 50 percent. How will the pump be affected if the discharge valve is fully opened?

A. Motor current decreases and total developed head decreases.

B. Available net positive suction head (NPSH) decreases, and pump differential pressure decreases.

C. Total developed head increases and available NPSH decreases.

D. The potential for pump cavitation decreases, and pump differential pressure decreases.

ANSWER: B.

TOPIC: 291004
KNOWLEDGE: K1.14 [2.5/2.5]
QID: B3623 (P3623)

A centrifugal firewater pump is operating to pressurize a fire main. The pump takes suction on a water reservoir. The reservoir water level and the eye of the pump impeller are both at sea level.

Given:

- The pump has a design shutoff head of 100 feet.
- The required net positive suction head (NPSH) for the pump is 15 feet.
- The reservoir water temperature is 60°F.
- A fire hose connected to the fire main is being used to suppress an elevated fire.

At which one of the following elevations (referenced to sea level) will the fire hose spray nozzle first be <u>unable</u> to provide flow? (Disregard head loss in the fire main and fire hose.)

A. 86 feet

B. 101 feet

C. 116 feet

D. 135 feet

ANSWER: B.

TOPIC: 291004
KNOWLEDGE: K1.14 [2.5/2.5]
QID: B3911 (P3912)

A centrifugal firewater pump is operating to pressurize a fire main. The pump takes suction from a water reservoir. A fire hose connected to the fire main is being used to suppress an elevated fire.

Given:

- The eye of the pump impeller is located 5 feet above the reservoir water level.
- The pump has a design shutoff head of 120 feet.
- The required net positive suction head (NPSH) for the pump is 15 feet.
- The reservoir water temperature is 60°F.

At which one of the following elevations above the eye of the pump impeller will the fire hose spray nozzle first be unable to provide flow? (Disregard all sources of head loss.)

A. 111 feet

B. 116 feet

C. 121 feet

D. 126 feet

ANSWER: B.

TOPIC: 291004
KNOWLEDGE: K1.14 [2.5/2.5]
QID: B4312 (P4313)

A centrifugal firewater pump is operating to pressurize a fire main. The pump takes suction from a vented water storage tank. A fire hose connected to the fire main is being used to suppress an elevated fire.

Given:

- The eye of the pump impeller is located 30 feet below the tank water level.
- The pump has a design shutoff head of 120 feet.
- The required net positive suction head (NPSH) for the pump is 15 feet.
- The tank water temperature is 60°F.

At which one of the following elevations above the eye of the pump impeller will the fire hose spray nozzle first be <u>unable</u> to provide flow? (Disregard all sources of head loss.)

A. 106 feet

B. 121 feet

C. 136 feet

D. 151 feet

ANSWER: D.

TOPIC: 291004
KNOWLEDGE: K1.14 [2.5/2.5]
QID: B4513 (P1423)

Which one of the following is at a relatively high value when a centrifugal pump is operating at shutoff head?

A. Pump motor current

B. Pump volumetric flow rate

C. Available net positive suction head

D. Required net positive suction head

ANSWER: C.

TOPIC: 291004
KNOWLEDGE: K1.14 [2.5/2.5]
QID: B4911 (P4912)

A centrifugal firewater pump is operating to pressurize a fire main. The pump takes suction from a water reservoir. A fire hose connected to the fire main is being used to suppress an elevated fire.

Given:

- The eye of the pump impeller is located 15 feet below the reservoir water level.
- The pump has a design shutoff head of 120 feet.
- The required net positive suction head (NPSH) for the pump is 15 feet.
- The reservoir water temperature is 60°F.

At which one of the following elevations above the reservoir water level will the fire hose spray nozzle first be <u>unable</u> to provide flow? (Disregard all sources of head loss.)

A. 91 feet

B. 106 feet

C. 121 feet

D. 136 feet

ANSWER: C.

TOPIC: 291004
KNOWLEDGE: K1.14 [2.5/2.5]
QID: B5412 (P5412)

A motor-driven centrifugal pump is operating in a closed-loop cooling water system and is unable to achieve its rated volumetric flow rate due to cavitation. Which one of the following will enable the pump to achieve a higher volumetric flow rate before cavitation occurs?

A. Operate the system at a higher pressure.

B. Operate the system at a higher temperature.

C. Remove the existing pump motor and install a motor with a higher horsepower rating.

D. Remove the existing pump and install a same-capacity pump with a higher minimum required net positive suction head rating.

ANSWER: A.

TOPIC: 291004
KNOWLEDGE: K1.14 [2.5/2.5]
QID: B5712 (P5712)

Refer to the graph that represents the head-capacity characteristics for a single-speed centrifugal cooling water pump (see figure below).

Which one of the following lists a pair of parameters that could be represented by curves A and B? (Note: NPSH is net positive suction head.)

	Curve A	Curve B
A.	Pump Head	Available NPSH
B.	Available NPSH	Required NPSH
C.	Required NPSH	System Head Loss
D.	System Head Loss	Pump Head

ANSWER: B.

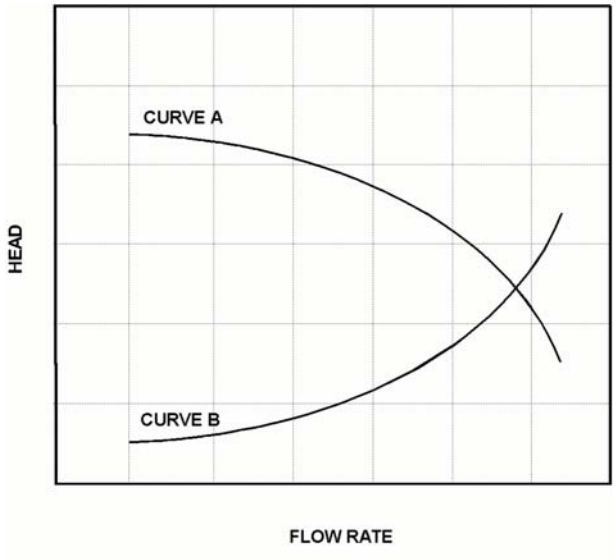

TOPIC: 291004
KNOWLEDGE: K1.14 [2.5/2.5]
QID: B6511 (P6512)

A motor-driven centrifugal pump is operating normally in a closed cooling water system. When the pump discharge flow control valve is opened further, the pump is unable to provide the desired volumetric flow rate due to cavitation. Which one of the following will enable a higher pump volumetric flow rate before cavitation occurs?

A. Remove the existing motor and install a motor with a lower horsepower rating.

B. Remove the existing motor and install a motor with a higher horsepower rating.

C. Remove the existing pump and install a same-capacity pump with a lower minimum net positive suction head requirement.

D. Remove the existing pump and install a same-capacity pump with a higher minimum net positive suction head requirement.

ANSWER: C.

TOPIC: 291004
KNOWLEDGE: K1.14 [2.5/2.5]
QID: B7012 (P7012)

Refer to the drawing of an operating cooling water system (see figure below).

The pump is unable to achieve its rated volumetric flow rate due to cavitation. Which one of the following will enable the pump to achieve a higher volumetric flow rate before cavitation occurs?

A. Decrease the service water flow rate.

B. Operate the system at a lower pressure.

C. Move the surge tank connection closer to the suction of the pump.

D. Remove the existing pump motor and install a motor with a higher horsepower rating.

ANSWER: C.

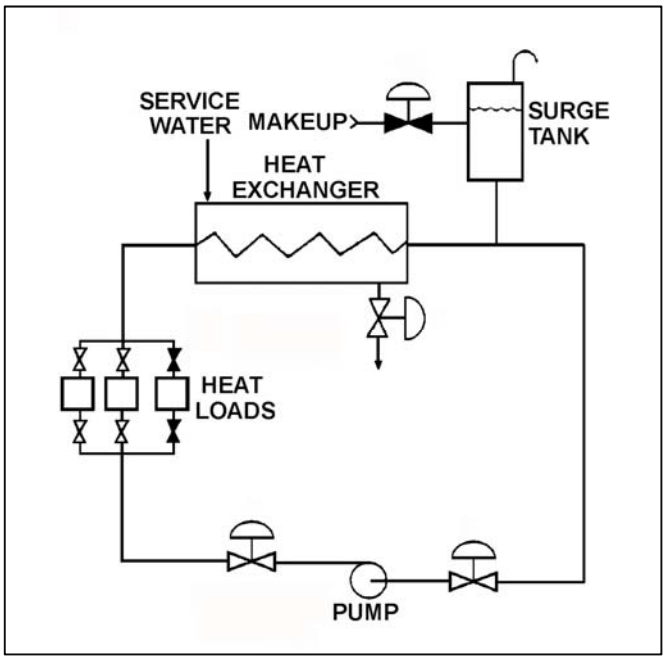

TOPIC: 291004
KNOWLEDGE: K1.15 [2.9/2.9]
QID: B624

A centrifugal pump is susceptible to overheating and possible cavitation while operating with its discharge valve closed, unless...

A. the pump is steam driven.

B. the suction valve is also closed.

C. pump seal cooling is provided.

D. minimum flow protection is provided.

ANSWER: D.

TOPIC: 291004
KNOWLEDGE: K1.15 [2.9/2.9]
QID: B1623

Which one of the following describes the primary purpose of minimum flow piping for a centrifugal pump?

A. Prevent pump runout during high flow conditions.

B. Prevent vortexing at the pump suction during high flow conditions.

C. Ensure adequate net positive suction head during low flow conditions.

D. Ensure adequate pump cooling during low flow conditions.

ANSWER: D.

TOPIC: 291004
KNOWLEDGE: K1.16 [2.5/2.7]
QID: B323 (P326)

A positive displacement pump (PDP) is operating in an open system. PDP parameters are as follows:

PDP speed	=	1,000 rpm
PDP discharge pressure	=	2,000 psig
PDP suction pressure	=	50 psig
PDP flow rate	=	150 gpm

Which one of the following changes will cause PDP flow rate to exceed 200 gpm?

A. A second identical discharge path is opened.

B. PDP speed is increased to 1,500 rpm.

C. PDP suction pressure is increased to 120 psig.

D. Downstream system pressure is decreased to 1,000 psig.

ANSWER: B.

TOPIC: 291004
KNOWLEDGE: K1.16 [2.5/2.7]
QID: B824

The volumetric flow rate of a positive displacement pump is directly proportional to the:

A. fluid density.

B. motor horsepower.

C. slip ratio.

D. pump speed.

ANSWER: D.

TOPIC: 291004
KNOWLEDGE: K1.16 [2.5/2.7]
QID: B1021 (P2223)

A centrifugal pump is operating in parallel with a positive displacement pump in an open water system. Each pump has the same maximum design pressure.

If pump discharge pressure increases to the maximum design pressure of each pump, the centrifugal pump will be operating at _____ flow; and the positive displacement pump will be operating near _____ flow.

A. minimum; minimum

B. minimum; maximum rated

C. maximum rated; minimum

D. maximum rated; maximum rated

ANSWER: B.

TOPIC: 291004
KNOWLEDGE: K1.16 [2.5/2.7]
QID: B1424

A positive displacement pump is operating at a constant speed in an open water system with its suction and discharge valves fully open. Which one of the following will increase if the pump discharge valve is throttled to 50 percent closed?

A. Proximity to cavitation

B. Required net positive suction head

C. Pump flow rate

D. Pump slip

ANSWER: D.

TOPIC: 291004
KNOWLEDGE: K1.16 [2.5/2.7]
QID: B1525 (P1526)

A positive displacement pump (PDP) is operating in an open water system. PDP parameters are as follows:

PDP speed	=	480 rpm
PDP discharge pressure	=	1,000 psig
PDP suction pressure	=	10 psig
PDP flow rate	=	60 gpm

Which one of the following changes will cause PDP flow rate to exceed 100 gpm?

A. A second identical discharge path is opened.

B. PDP speed is increased to 900 rpm.

C. PDP suction pressure is increased to 40 psig.

D. Downstream system pressure is decreased to 500 psig.

ANSWER: B.

TOPIC: 291004
KNOWLEDGE: K1.16 [2.5/2.7]
QID: B1824 (P2126)

A variable-speed positive displacement pump is operating at 100 rpm with a flow rate of 60 gpm in an open system. To decrease pump flow rate to 25 gpm, pump speed must be decreased to approximately...

A. 17 rpm.

B. 33 rpm.

C. 42 rpm.

D. 62 rpm.

ANSWER: C.

TOPIC: 291004
KNOWLEDGE: K1.16 [2.5/2.7]
QID: B1919 (P1726)

An ideal (no slip) reciprocating positive displacement pump is operating to provide makeup water to a reactor coolant system that is being maintained at 1,000 psig. The discharge valve of the pump was found to be throttled to 80 percent open.

If the valve is subsequently fully opened, pump flow rate will _____; and pump head will _____.

A. increase; decrease

B. remain constant; decrease

C. increase; remain constant

D. remain constant; remain constant

ANSWER: B.

TOPIC: 291004
KNOWLEDGE: K1.16 [2.5/2.7]
QID: B2525 (P2526)

Which one of the following will result in the greatest increase in volumetric flow rate to a system that is currently receiving flow from a positive displacement pump operating at 400 rpm with a discharge pressure of 100 psig?

A. Increase pump speed to 700 rpm.

B. Reduce system pressure to decrease pump discharge pressure to 40 psig.

C. Start a second identical positive displacement pump in series with the first.

D. Start a second identical positive displacement pump in parallel with the first.

ANSWER: D.

TOPIC: 291004
KNOWLEDGE: K1.16 [2.5/2.7]
QID: B2724 (P2726)

Which one of the following conditions will result in the greatest increase in volumetric flow rate from a positive displacement pump operating at 300 rpm and a discharge pressure of 100 psig?

A. Increasing pump speed to 700 rpm.

B. Decreasing pump discharge pressure to 30 psig.

C. Starting a second identical positive displacement pump in series with the first.

D. Starting a second identical positive displacement pump in parallel with the first.

ANSWER: A.

TOPIC: 291004
KNOWLEDGE: K1.16 [2.5/2.7]
QID: B2925 (P2926)

An ideal (no slip) reciprocating positive displacement pump is operating in an open system to provide makeup water to a coolant system that is being maintained at 800 psig. The discharge valve of the pump is full open.

If the pump discharge valve is subsequently throttled to 80 percent open, pump flow rate will _____; and pump head will _____.

A. decrease; increase

B. decrease; remain constant

C. remain constant; increase

D. remain constant; remain constant

ANSWER: C.

TOPIC: 291004
KNOWLEDGE: K1.16 [2.5/2.7]
QID: B3224 (P925)

A variable-speed positive displacement pump is operating at 100 rpm with a flow rate of 60 gpm in an open system. To decrease pump flow rate to 30 gpm, pump speed must be decreased to approximately...

A. 25 rpm.

B. 33 rpm.

C. 50 rpm.

D. 71 rpm.

ANSWER: C.

TOPIC: 291004
KNOWLEDGE: K1.16 [2.5/2.7]
QID: B3722 (P3730)

A rotary positive displacement pump (PDP) is being used to supply water to a piping system. The PDP is driven by an AC induction motor. The initial parameters are:

System pressure	=	500 psig
PDP flow rate	=	50 gpm
PDP motor current	=	40 amps

After several hours, the PDP motor speed is increased such that the new PDP flow rate is 100 gpm. If system pressure does <u>not</u> change, what is the approximate value of the PDP motor current at the 100 gpm flow rate?

A. 80 amps

B. 160 amps

C. 320 amps

D. 640 amps

ANSWER: A.

TOPIC: 291004
KNOWLEDGE: K1.17 [2.5/2.6]
QID: B324 (P322)

The available net positive suction head for a pump may be expressed as...

A. discharge pressure minus saturation pressure of the fluid being pumped.

B. discharge pressure minus suction pressure.

C. suction pressure minus saturation pressure of the fluid being pumped.

D. suction pressure plus discharge pressure.

ANSWER: C.

TOPIC: 291004
KNOWLEDGE: K1.17 [2.5/2.6]
QID: B825

Which one of the following will occur as a direct result of operating a positive displacement pump with insufficient net positive suction head?

A. Increased slip

B. Decreased pump speed

C. Increased flow rate

D. Vapor binding

ANSWER: D.

TOPIC: 291004
KNOWLEDGE: K1.17 [2.5/2.6]
QID: B6113 (P6139)

Water enters a positive displacement pump at 50 psig and 90°F. What is the available net positive suction head for the pump?

A. 80 feet

B. 114 feet

C. 133 feet

D. 148 feet

ANSWER: D.

TOPIC: 291004
KNOWLEDGE: K1.18 [3.3/3.3]
QID: B1125 (P1425)

Which one of the following describes the proper location for a relief valve that will be used to prevent exceeding the design pressure of a positive displacement pump and associated piping?

A. On the pump suction piping upstream of the suction isolation valve.

B. On the pump suction piping downstream of the suction isolation valve.

C. On the pump discharge piping upstream of the discharge isolation valve.

D. On the pump discharge piping downstream of the discharge isolation valve.

ANSWER: C.

TOPIC: 291004
KNOWLEDGE: K1.18 [3.3/3.3]
QID: B2425 (P626)

What is the purpose of the relief valve located between the pump outlet and the discharge isolation valve of many positive displacement pumps?

A. Protect the pump and suction piping from overpressure if the discharge valve is open during system startup.

B. Protect the pump and suction piping from overpressure if the suction valve is closed during pump operation.

C. Protect the pump and discharge piping from overpressure if the discharge valve is closed during pump operation.

D. Protect the pump and discharge piping from overpressure due to thermal expansion of pump contents when the pump is stopped with its suction valve closed.

ANSWER: C.

TOPIC: 291004
KNOWLEDGE: K1.19 [2.6/2.6]
QID: B1625

A pump that moves liquid by means of a piston within a cylinder that displaces a given volume of fluid for each stroke is a _____ pump.

A. centrifugal

B. screw

C. reciprocating

D. radial

ANSWER: C.

TOPIC: 291004
KNOWLEDGE: K1.19 [2.6/2.6]
QID: B2624 (P2626)

A section of reactor coolant piping is being hydrostatically tested to 1,400 psig using a positive displacement pump. The operating characteristics of the positive displacement pump are shown below, identifying ideal, expected, and actual pump performance.

Which one of the following could cause the observed difference between the expected and the actual pump performance?

A. Pump internal leakage is greater than expected.

B. Reactor coolant piping boundary valve leakage is greater than expected.

C. Available NPSH has decreased more than expected, but remains slightly above required NPSH.

D. A relief valve on the pump discharge piping has opened prior to its setpoint of 1,400 psig.

ANSWER: A.

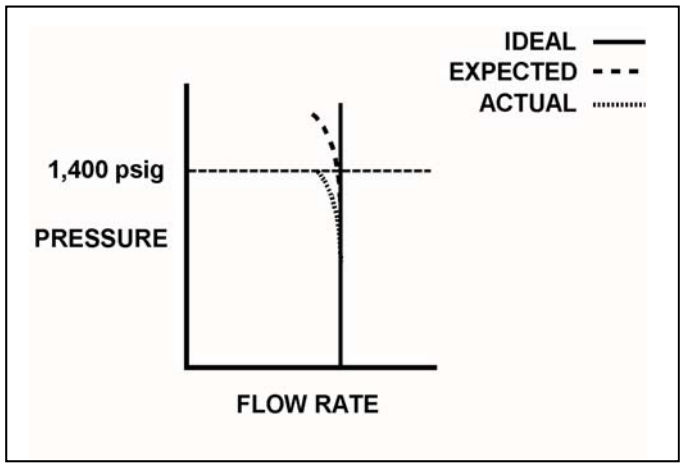

TOPIC: 291004
KNOWLEDGE: K1.19 [2.6/2.6]
QID: B3025 (P3024)

A pump is needed to supply fuel oil from a day tank to a diesel engine fuel injection system. The pump must maintain a nearly constant flow rate with a minimum of discharge pressure fluctuations as system pressure varies between 200 psig and 1,900 psig.

Which one of the following types of pumps would typically be used in this application?

A. Axial-flow centrifugal

B. Radial-flow centrifugal

C. Rotary positive displacement

D. Reciprocating positive displacement

ANSWER: C.

TOPIC: 291004
KNOWLEDGE: K1.19 [2.6/2.6}
QID: B5013 (P5012)

Use the following drawing of system and pump operating curves for a positive displacement pump with discharge relief valve protection to answer the following question.

A positive displacement pump is initially supplying water at 40 gpm with a pump discharge pressure of 400 psia. If pump speed is increased until pump flow rate is 80 gpm, what is the new pump discharge pressure?

A. 800 psia

B. 1,000 psia

C. 1,200 psia

D. 1,600 psia

ANSWER: B.

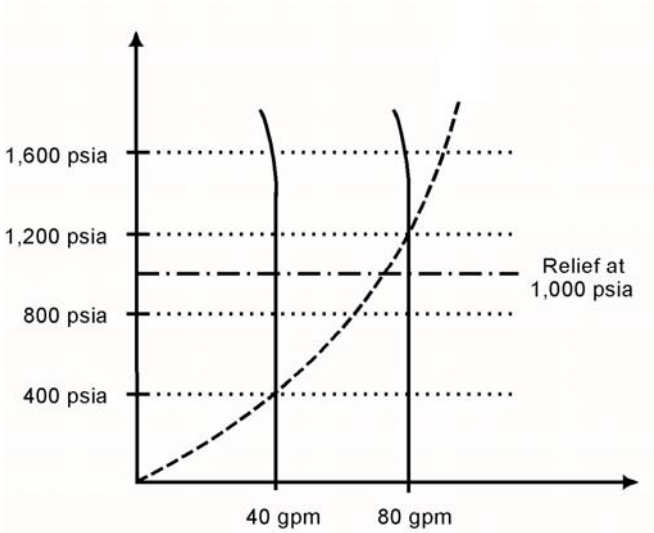

TOPIC: 291004
KNOWLEDGE: K1.19 [2.6/2.6}
QID: B5313 (P5313)

Use the following drawing of system and pump operating curves for an operating positive displacement pump with relief valve protection to answer the following question.

A positive displacement pump is initially supplying water at 40 gpm with a pump discharge pressure of 200 psia. If pump speed is increased until pump flow rate is 80 gpm, what is the new pump discharge pressure?

A. 400 psia

B. 800 psia

C. 1,000 psia

D. 1,600 psia

ANSWER: B.

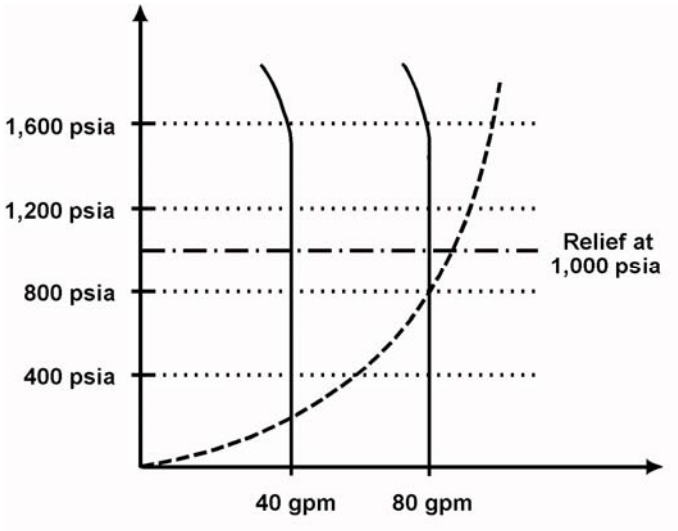

TOPIC: 291004
KNOWLEDGE: K1.20 [3.1/3.1]
QID: B117

Prior to starting a positive displacement pump, the discharge valve should be open to...

A. prevent rupturing the pump casing.

B. limit the pump motor starting time.

C. ensure the pump casing fills by backflow.

D. reduce pressure fluctuations in the discharge piping.

ANSWER: A.

TOPIC: 291004
KNOWLEDGE: K1.20 [3.1/3.1]
QID: B923

A _____ pump in a liquid system should be started with its discharge valve _____ to avoid rupturing the pump casing and/or discharge piping.

A. centrifugal; fully closed

B. centrifugal; fully open

C. positive displacement; fully closed

D. positive displacement; fully open

ANSWER: D.

TOPIC: 291004
KNOWLEDGE: K1.21 [3.1/3.0]
QID: B525 (P1923)

A positive displacement pump should be started with its suction valve _____ and its discharge valve _____.

A. closed; closed

B. closed; open

C. open; closed

D. open; open

ANSWER: D.

TOPIC: 291004
KNOWLEDGE: K1.21 [3.1/3.1]
QID: B1724 (P1722)

A positive displacement pump should be started with its suction valve _____ and its discharge valve _____.

A. throttled; throttled

B. throttled; fully open

C. fully open; throttled

D. fully open; fully open

ANSWER: D.

TOPIC: 291005
KNOWLEDGE: K1.01 [2.6/2.6]
QID: B229

If a locked rotor occurs on an operating motor-driven pump, motor amps will...

A. decrease due to the decreased pump flow rate.

B. decrease due to the decreased rotor speed.

C. increase due to the decreased pump flow rate.

D. increase due to the decreased rotor speed.

ANSWER: D.

TOPIC: 291005
KNOWLEDGE: K1.01 [2.6/2.6]
QID: B1326 (P2127)

A cooling water pump is being driven by an AC induction motor. Which one of the following describes how and why pump motor current will change if the pump shaft seizes?

A. Decreases due to decreased pump flow.

B. Decreases due to increased counter electromotive force.

C. Increases due to decreased pump flow.

D. Increases due to decreased counter electromotive force.

ANSWER: D.

TOPIC: 291005
KNOWLEDGE: K1.01 [2.6/2.6]
QID: B2626 (P1427)

A motor-driven cooling water pump is operating normally. How will pump motor current respond if the pump experiences a locked rotor?

A. Decreases immediately to zero due to breaker trip.

B. Decreases immediately to no-load motor amps.

C. Increases immediately to many times running current, then decreases to no-load motor amps.

D. Increases immediately to many times running current, then decreases to zero upon breaker trip.

ANSWER: D.

TOPIC: 291005
KNOWLEDGE: K1.01 [2.6/2.6]
QID: B2826 (P3127)

A motor-driven centrifugal pump exhibits indications of pump failure while being started in an idle cooling water system. Assuming the pump motor breaker does <u>not</u> trip, which one of the following pairs of indications would be observed if the failure is a locked pump shaft?

A. Lower than normal running current with zero system flow rate.

B. Lower than normal running current with a fraction of normal system flow rate.

C. Excessive duration of peak starting current with zero system flow rate.

D. Excessive duration of peak starting current with a fraction of normal system flow rate.

ANSWER: C.

TOPIC: 291005
KNOWLEDGE: K1.01 [2.6/2.6]
QID: B5914 (P5914)

When a motor-driven centrifugal pump was started, the motor ammeter reading immediately increased to, and stabilized at, many times the normal operating value. Which one of the following describes a possible cause for the ammeter response?

A. The pump was started with a fully closed discharge valve.

B. The pump was started with a fully open discharge valve.

C. The pump shaft seized upon start and did not rotate.

D. The pump shaft separated from the motor shaft upon start.

ANSWER: C.

TOPIC: 291005
KNOWLEDGE: K1.02 [2.6/2.7]
QID: B1126 (P1528)

Continuous operation of a motor at rated load with a loss of required cooling to the motor windings will eventually result in...

A. cavitation of the pumped fluid.

B. failure of the motor overcurrent protection devices.

C. breakdown of the motor insulation and electrical grounds.

D. phase current imbalance in the motor and overspeed trip actuation.

ANSWER: C.

TOPIC: 291005
KNOWLEDGE: K1.02 [2.6/2.7]
QID: B1526 (P1028)

Which one of the following will result from prolonged operation of an AC induction motor with excessively high stator temperatures?

A. Decreased electrical current demand due to reduced counter electromotive force.

B. Increased electrical current demand due to reduced counter electromotive force.

C. Decreased electrical resistance to ground due to breakdown of winding insulation.

D. Increased electrical resistance to ground due to breakdown of winding insulation.

ANSWER: C.

TOPIC: 291005
KNOWLEDGE: K1.02 [2.6/2.7]
QID: B1927 (P528)

Which one of the following will provide the initial motor protection against electrical damage caused by gradual bearing failure?

A. Thermal overload device

B. Overcurrent trip relay

C. Underfrequency relay

D. Undervoltage device

ANSWER: A.

TOPIC: 291005
KNOWLEDGE: K1.03 [2.6/2.7]
QID: B2228 (P1128)

An AC generator is supplying an isolated electrical system with a power factor of 1.0. If generator voltage is held constant while real load (KW) increases, the current supplied by the generator will increase in direct proportion to the _____ of the change in real load. (Assume the generator power factor remains constant at 1.0.)

A. cube

B. square

C. amount

D. square root

ANSWER: C.

TOPIC: 291005
KNOWLEDGE: K1.03 [2.6/2.7]
QID: B2327

A main generator that is connected to an infinite power grid has the following generator indications:

100 MW
0 MVAR
2,900 amps
20 KV

If MVAR does not change while real load is increased to 200 MW, the current supplied by the generator will increase to approximately...

A. 11,600 amps

B. 8,200 amps

C. 5,800 amps

D. 4,100 amps

ANSWER: C.

TOPIC: 291005
KNOWLEDGE: K1.03 [2.6/2.7]
QID: B3227 (P3229)

Refer to the partial drawing of two centrifugal pumps in a cooling water system (see figure below).

The cooling water system is being returned to service following maintenance on the two identical cooling water pumps. The two pumps take suction from a common suction header and discharge to a common discharge header. Each pump is driven by an AC induction motor.

Pump A was started five minutes ago to initiate flow in the cooling water system. Pump B is about to be started.

When pump B is started, which one of the following would cause the ammeter for pump B to remain off-scale high for several seconds longer than usual before returning to normal running current indication?

A. The pump packing was removed and not reinstalled.

B. The pump was initially rotating in the reverse direction.

C. Two phases of the motor windings were electrically switched.

D. The coupling between the motor and the pump was removed and not reinstalled.

ANSWER: B.

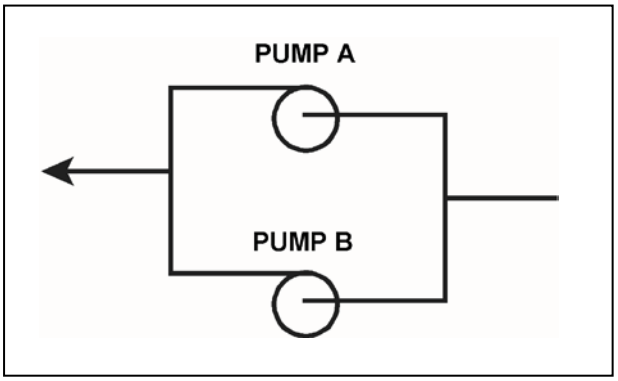

TOPIC: 291005
KNOWLEDGE: K1.03 [2.6/2.7]
QID: B4714 (P4714)

A nuclear power plant startup is in progress. The main generator has just been connected to the power grid with the following generator indications:

20 KV
288 amps
10 MW
0 MVAR

The operator suspects the main generator is operating under reverse power conditions and attempts to increase generator load (MW) normally. If the main generator is operating under reverse power conditions when the operator attempts to increase generator load, generator MW will initially _____; and generator amps will initially _____.

A. decrease; decrease

B. decrease; increase

C. increase; decrease

D. increase; increase

ANSWER: A.

TOPIC: 291005
KNOWLEDGE: K1.04 [2.7/2.7]
QID: B27

Given the following conditions for a variable-speed motor-driven centrifugal pump:

Flow rate = 2000 gpm
Motor current = 100 amps

If the flow rate is increased to 4000 gpm, which one of the following motor current values <u>most</u> <u>closely</u> approximates the actual value?

A. 200 amps

B. 400 amps

C. 800 amps

D. 1600 amps

ANSWER: C.

TOPIC: 291005
KNOWLEDGE: K1.04 [2.7/2.7]
QID: B227 (P228)

A motor-driven centrifugal pump is operating with a flow rate of 3,000 gpm and a current requirement of 200 amps. If the pump speed is reduced such that the flow rate is 2,000 gpm, what is the final current requirement at the new lower speed? (Assume a constant motor voltage.)

A. 59 amps

B. 89 amps

C. 133 amps

D. 150 amps

ANSWER: A.

TOPIC: 291005
KNOWLEDGE: K1.04 [2.7/2.7]
QID: B326 (P328)

A motor-driven centrifugal pump is operating with the following parameters:

Speed	=	1,800 rpm
Motor current	=	40 amps
Pump head	=	20 psi
Pump flow rate	=	400 gpm

What will be the approximate values of pump head and motor current if pump speed is increased to 2,000 rpm?

A. 22 psi, 44 amps

B. 25 psi, 49 amps

C. 22 psi, 49 amps

D. 25 psi, 55 amps

ANSWER: D.

TOPIC: 291005
KNOWLEDGE: K1.04 [2.7/2.7]
QID: B1228 (P3430)

A motor-driven centrifugal pump is operating at 600 rpm with the following parameters:

Motor current	=	100 amps
Pump head	=	50 psid
Pump flow rate	=	880 gpm

What will be the approximate value of pump head if pump speed is increased such that the motor draws 640 amps?

A. 93 psid

B. 126 psid

C. 173 psid

D. 320 psid

ANSWER: C.

TOPIC: 291005
KNOWLEDGE: K1.04 [2.7/2.7]
QID: B1626 (P3129)

A multi-speed motor-driven centrifugal pump is operating with the following parameters:

Motor current = 27 amps
Pump head = 50 psid
Pump flow rate = 880 gpm

Which one of the following will be the approximate new value of pump head if pump speed is increased such that the motor draws 64 amps?

A. 89 psid

B. 119 psid

C. 211 psid

D. 281 psid

ANSWER: A.

TOPIC: 291005
KNOWLEDGE: K1.04 [2.7/2.7]
QID: B2030 (P428)

A motor-driven centrifugal pump is operating at 600 rpm with the following parameters:

Motor current = 10 amps
Pump head = 50 psid
Pump flow rate = 200 gpm

What will be the new value of pump head if the pump speed is increased such that the current requirements are now 640 amps?

A. 400 psid

B. 600 psid

C. 800 psid

D. 1,200 psid

ANSWER: C.

TOPIC: 291005
KNOWLEDGE: K1.04 [2.7/2.7]
QID: B2126 (P1530)

A motor-driven centrifugal pump is operating with the following parameters:

Speed	=	1,200 rpm
Motor current	=	40 amps
Pump head	=	20 psid
Pump flow rate	=	400 gpm

What will be the approximate values of pump head and motor current if pump speed is increased to 1,600 rpm?

A. 25 psid, 55 amps

B. 25 psid, 95 amps

C. 36 psid, 55 amps

D. 36 psid, 95 amps

ANSWER: D.

TOPIC: 291005
KNOWLEDGE: K1.04 [2.7/2.7]
QID: B2229 (P2130)

A motor-driven centrifugal pump is operating at 600 rpm with the following parameters:

Motor current	=	100 amps
Pump head	=	50 psid
Pump flow rate	=	880 gpm

What will be the approximate value of pump head if pump speed is increased to 1,200 rpm?

A. 71 psid

B. 100 psid

C. 141 psid

D. 200 psid

ANSWER: D.

TOPIC: 291005
KNOWLEDGE: K1.04 [2.7/2.7]
QID: B2527 (P2529)

A multi-speed centrifugal pump is operating with a flow rate of 1,800 gpm at a speed of 3,600 rpm.

Which one of the following approximates the new flow rate if the pump speed is decreased to 2,400 rpm?

A. 900 gpm

B. 1,050 gpm

C. 1,200 gpm

D. 1,350 gpm

ANSWER: C.

TOPIC: 291005
KNOWLEDGE: K1.04 [2.7/2.7]
QID: B2627 (P1828)

A motor-driven centrifugal pump is operating with a flow rate of 3,000 gpm and a motor current of 150 amps. If the pump speed is reduced such that the flow rate is 2,000 gpm, what is the final motor current at the new lower speed?

A. 44 amps

B. 59 amps

C. 67 amps

D. 100 amps

ANSWER: A.

TOPIC: 291005
KNOWLEDGE: K1.04 [2.7/2.7]
QID: B3127 (P3130)

Which one of the following describes the relationship between the current drawn by an AC induction motor and the amount of heat generated in the motor windings?

A. Heat generation is directly proportional to the current.

B. Heat generation is proportional to the cube of the current.

C. Heat generation is proportional to the square of the current.

D. Heat generation is proportional to the square root of the current.

ANSWER: C.

TOPIC: 291005
KNOWLEDGE: K1.04 [2.7/2.7]
QID: B4515 (P4515)

Refer to the pump performance curves for a centrifugal cooling water pump (see figure below). The pump is being driven by a single-speed AC induction motor. Pump flow rate is being controlled by a throttled discharge flow control valve.

The following initial pump conditions exist:

Pump motor current = 50 amps
Pump flow rate = 400 gpm

What will be the approximate value of pump motor current if the flow control valve is repositioned such that pump flow rate is 800 gpm?

A. Less than 100 amps

B. 200 amps

C. 400 amps

D. More than 500 amps

ANSWER: A.

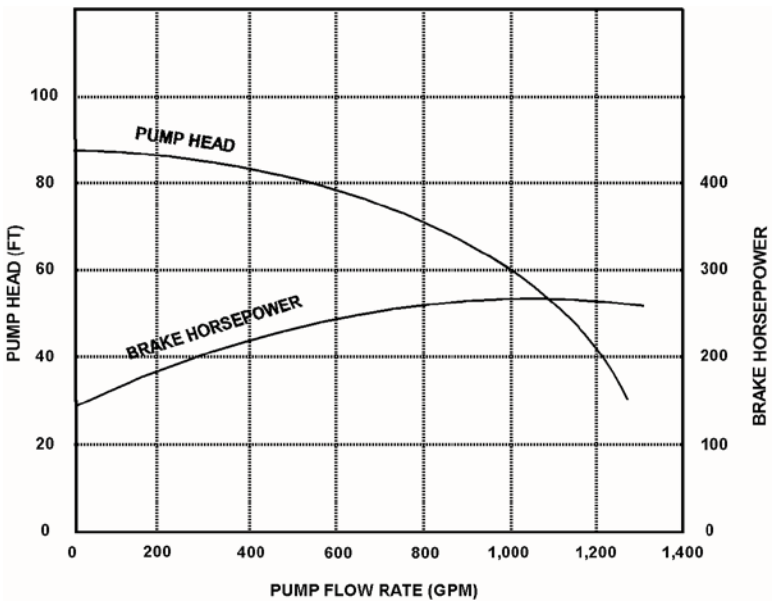

TOPIC: 291005
KNOWLEDGE: K1.04 [2.7/2.7]
QID: B4914 (P4915)

Consider two identical single-speed AC induction motors, one of which is connected to a radial-flow centrifugal pump and the other to a reciprocating-type positive displacement pump (PDP). Both pumps are taking suction at the same elevation from a vented water storage tank.

Each pump has a maximum design backpressure of 800 psig, and each is operating with the following initial conditions:

Flow rate = 200 gpm
Backpressure = 400 psig
Motor current = 100 amps

If the backpressure for each pump increases to 600 psig, the centrifugal pump will have a _____ flow rate than the PDP; and the centrifugal pump will have a _____ motor current than the PDP.

A. lower; higher

B. lower; lower

C. higher; higher

D. higher; lower

ANSWER: B.

TOPIC: 291005
KNOWLEDGE: K1.04 [2.7/2.7]
QID: B5814 (P5814)

Refer to the pump performance curves for a centrifugal cooling water pump (see figure below). The pump is being driven by a single-speed AC induction motor. Pump flow rate is being controlled by a throttled discharge flow control valve.

The following initial pump conditions exist:

Motor current = 100 amps
Pump flow rate = 800 gpm

What will be the approximate value of pump motor current if the flow control valve is repositioned such that pump flow rate decreases to 400 gpm?

A. Less than 15 amps

B. 25 amps

C. 50 amps

D. Greater than 75 amps

ANSWER: D.

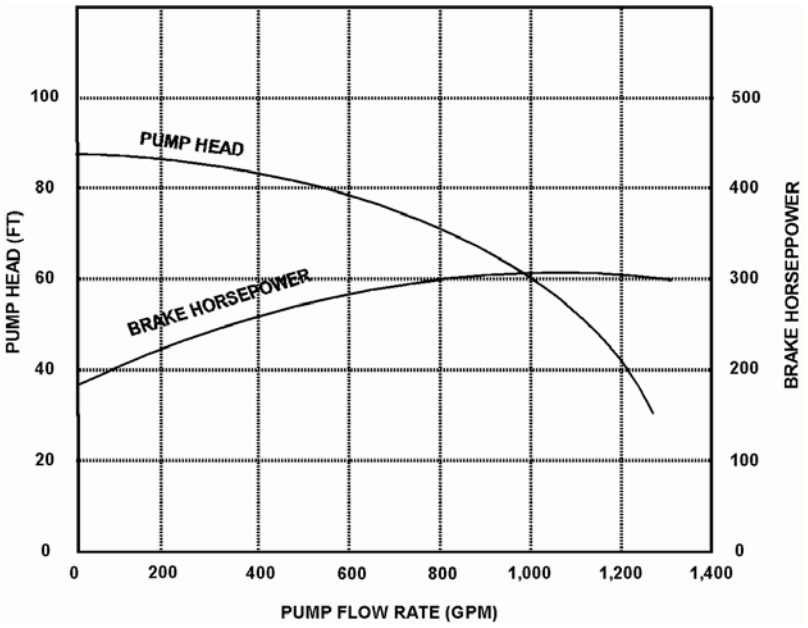

TOPIC: 291005
KNOWLEDGE: K1.04 [2.7/2.7]
QID: B6215 (P6215)

An AC induction motor is connected to a radial-flow centrifugal pump in a cooling water system. When the pump is started, the time period required to reach a stable running current will be shorter if the pump discharge valve is fully _____; and the stable running current will be lower if the pump discharge valve is fully _____.

A. open; open

B. open; closed

C. closed; open

D. closed; closed

ANSWER: D.

TOPIC: 291005
KNOWLEDGE: K1.04 [2.7/2.7]
QID: B6814 (P6814)

A centrifugal pump is driven by a single-speed AC induction motor. Pump flow rate is controlled by a throttled discharge flow control valve.

The following initial pump conditions exist:

Pump motor current = 50 amps
Pump flow rate = 400 gpm

What will the resulting pump motor current be if the flow control valve is repositioned such that pump flow rate increases to 800 gpm?

A. 100 amps

B. 200 amps

C. 400 amps

D. Cannot be determined without additional information.

ANSWER: D.

TOPIC: 291005
KNOWLEDGE: K1.04 [2.7/2.7]
QID: B7214 (P7214)

An axial flow ventilation fan is being driven by an AC motor. The fan is operating at its maximum rated flow rate. How will the fan motor current initially change if the flow rate through the fan is decreased by partially closing a discharge damper?

A. The motor current will increase in accordance with the centrifugal pump laws.

B. The motor current will increase, but not in accordance with the centrifugal pump laws.

C. The motor current will decrease in accordance with the centrifugal pump laws.

D. The motor current will decrease, but not in accordance with the centrifugal pump laws.

ANSWER: B

TOPIC: 291005
KNOWLEDGE: K1.04 [2.7/2.7]
QID: B7414 (P7414)

Consider two identical single-speed AC induction motors, one of which is connected to a radial-flow centrifugal pump and the other to a rotary-type positive displacement pump (PDP). Both pumps are taking suction from the bottom of a vented water storage tank.

Each pump is operating with the following initial conditions:

Flow rate = 200 gpm
Backpressure = 600 psig
Motor current = 100 amps

If the backpressure for each pump decreases to 400 psig, the centrifugal pump will have a _____ flow rate than the PDP; and the centrifugal pump will have a _____ motor current than the PDP.

A. lower; lower

B. lower; higher

C. higher; lower

D. higher; higher

ANSWER: D.

TOPIC: 291005
KNOWLEDGE: K1.05 [2.6/2.7]
QID: B28 (P2229)

Which one of the following describes the motor current indications that would be observed during the start of a large motor-driven radial-flow centrifugal pump with a closed discharge valve?

A. Current immediately increases to the full-load value and then gradually decreases to the no-load value over several minutes.

B. Current immediately increases to the no-load value and then stabilizes.

C. Current immediately increases to many times the no-load value and then rapidly decreases to the no-load value after several seconds.

D. Current immediately increases to many times the no-load value and then gradually decreases to the no-load value after several minutes.

ANSWER: C.

TOPIC: 291005
KNOWLEDGE: K1.05 [2.6/2.7]
QID: B105 (P108)

The average starting current for a typical AC induction motor is approximately...

A. ten to fifteen times its normal running current.

B. five to seven times its normal running current.

C. two to three times its normal running current.

D. the same as its normal running current.

ANSWER: B.

TOPIC: 291005
KNOWLEDGE: K1.05 [2.6/2.7]
QID: B1227

Which one of the following AC induction motor events is characterized by maximum rotor slip and a motor current five to six times full-load current?

A. Starting of the motor

B. Ground in motor windings

C. Motor overloaded by 50 percent

D. Motor operating at breakdown torque

ANSWER: A.

TOPIC: 291005
KNOWLEDGE: K1.05 [2.6/2.7]
QID: B1327 (P1827)

Which one of the following describes the motor current during the start of a typical motor-driven radial-flow centrifugal pump with a closed discharge valve?

A. Current immediately increases to the full-load value and then gradually decreases to the no-load value.

B. Current immediately increases to the full-load value and then stabilizes at the full-load value.

C. Current immediately increases to many times the full-load value and then rapidly decreases to the no-load value after several seconds and then stabilizes.

D. Current immediately increases to many times the full-load value and then rapidly decreases to the full-load value after several seconds and then stabilizes.

ANSWER: C.

TOPIC: 291005
KNOWLEDGE: K1.05 [2.6/2.7]
QID: B2127 (P29)

The starting current in a typical AC induction motor is typically much higher than the full-load running current because...

A. starting torque is lower than full-load running torque.

B. starting torque is higher than full-load running torque.

C. rotor speed during start is too low to generate significant counter electromotive force in the stator.

D. rotor current during start is too low to generate significant counter electromotive force in the stator.

ANSWER: C.

TOPIC: 291005
KNOWLEDGE: K1.05 [2.6/2.7]
QID: B2227 (P2230)

Two identical AC induction motors are connected to identical radial-flow centrifugal pumps being used to provide cooling water flow in separate systems in a nuclear power plant. Each motor is rated at 1,000 hp. The discharge valve for pump A is fully open and the discharge valve for pump B is fully shut. Each pump is currently off.

If the pumps are started under these conditions, the longer time period required to stabilize motor current will be experienced by the motor for pump _____; and the higher stable motor current will be experienced by the motor for pump _____.

A. A; A

B. A; B

C. B; A

D. B; B

ANSWER: A.

TOPIC: 291005
KNOWLEDGE: K1.05 [2.6/2.7]
QID: B2428 (P2430)

Which one of the following describes when the highest stator current will be experienced by an AC induction motor?

A. During motor operation at full load.

B. During motor operation at zero load.

C. Immediately after energizing the motor.

D. Immediately after deenergizing the motor.

ANSWER: C.

TOPIC: 291005
KNOWLEDGE: K1.05 [2.6/2.7]
QID: B2528 (P2531)

Frequent starts of large motors will result in overheating of the motor windings due to high current flow caused by...

A. low electrical resistance of the motor windings.

B. an electrical short circuit between the rotor and stator.

C. high counter electromotive force at low rotor speeds.

D. windage losses between the rotor and stator.

ANSWER: A.

TOPIC: 291005
KNOWLEDGE: K1.05 [2.6/2.7]
QID: B2727 (P2730)

Two identical AC induction motors are connected to identical radial-flow centrifugal pumps in identical but separate cooling water systems. Each motor is rated at 200 hp. The discharge valve for pump A is fully shut and the discharge valve for pump B is fully open. Each pump is currently off.

If the pumps are started under these conditions, the longer time period required to stabilize motor current will be experienced by the motor for pump _____; and the higher stable motor current will be experienced by the motor for pump _____.

A. A; A

B. A; B

C. B; A

D. B; B

ANSWER: D.

TOPIC: 291005
KNOWLEDGE: K1.05 [2.6/2.7]
QID: B2928 (P930)

Which one of the following is a characteristic of a typical AC induction motor that causes starting current to be greater than running current?

A. The rotor magnetic field induces an opposing voltage in the stator that is proportional to rotor speed.

B. After the motor starts, resistors are added to the electrical circuit to limit the running current.

C. A large amount of starting current is required to initially establish the rotating magnetic field.

D. The rotor does not develop maximum induced current flow until it has achieved synchronous speed.

ANSWER: A.

TOPIC: 291005
KNOWLEDGE: K1.05 [2.6/2.7]
QID: B3529 (P2931)

Two identical AC induction motors are connected to identical radial-flow centrifugal pumps in identical but separate cooling water systems. Each motor is rated at 200 hp. The discharge valve for pump A is fully shut and the discharge valve for pump B is fully open. Each pump is currently off.

If the pumps are started under these conditions, the shorter time period required to reach a stable running current will be experienced by the motor for pump _____; and the higher stable running current will be experienced by the motor for pump _____.

A. A; A

B. A; B

C. B; A

D. B; B

ANSWER: B.

TOPIC: 291005
KNOWLEDGE: K1.05 [2.6/2.7]
QID: B4614 (P4615)

To minimize the adverse effects of starting current, an AC induction motor should be started _____ to _____ the stator counter electromotive force.

A. unloaded; quickly establish

B. unloaded; delay

C. partially loaded; quickly establish

D. partially loaded; delay

ANSWER: A.

TOPIC: 291005
KNOWLEDGE: K1.05 [2.6/2.7]
QID: B5714 (P5715)

Two identical AC induction motors are connected to identical radial-flow centrifugal pumps in identical but separate cooling water systems. Each motor is rated at 200 hp. The discharge valve for pump A is fully open and the discharge valve for pump B is fully closed. Each pump is currently off.

If the pumps are started under these conditions, the shorter time period required to reach a stable running current will be experienced by the motor for pump _____; and the higher stable running current will be experienced by the motor for pump _____.

A. A; A

B. A; B

C. B; A

D. B; B

ANSWER: C.

TOPIC: 291005
KNOWLEDGE: K1.06 [2.9/3.1]
QID: B26

For large electric motors, why must the number of starts during a specified period of time be limited?

A. To protect the power supply cables from insulation breakdown due to high starting current.

B. To protect the motor windings from overheating.

C. To prevent motor thrust bearing damage due to lack of lubrication.

D. To prevent rotor seizure due to thermal expansion of the windings.

ANSWER: B.

TOPIC: 291005
KNOWLEDGE: K1.06 [2.9/3.1]
QID: B228 (P2631)

Which one of the following is the primary reason for limiting the number of motor starts in a given time period?

A. Minimizes pitting of contacts in the motor breaker.

B. Prevents excessive torsional stresses on motor shaft.

C. Prevents overheating of motor windings.

D. Minimizes axial stresses on motor bearings.

ANSWER: C.

TOPIC: 291005
KNOWLEDGE: K1.06 [2.9/3.1]
QID: B328 (P231)

The frequency of starts for large AC motors should be limited to prevent excessive...

A. torsional stresses on the motor shaft.

B. wear of pump thrust bearings.

C. arcing and degradation of motor breaker contacts.

D. heat buildup within the motor.

ANSWER: D.

TOPIC: 291005
KNOWLEDGE: K1.06 [2.9/3.1]
QID: B928

Motor winding temperature will be reduced by...

A. increasing the reactive current flow in the stator windings.

B. limiting the number of motor starts allowed in a given time period.

C. decreasing the voltage supplied to the motor during full-load operation.

D. decreasing the number of stator poles during the start sequence.

ANSWER: B.

TOPIC: 291005
KNOWLEDGE: K1.06 [2.9/3.1]
QID: B1128 (P1131)

The frequency of start/stop cycles for an electrical motor is limited to prevent...

A. overheating the motor windings.

B. excessive shaft torsional stresses.

C. overheating the motor supply bus.

D. excessive cycling of the motor breaker.

ANSWER: A.

TOPIC: 291005
KNOWLEDGE: K1.06 [2.9/3.1]
QID: B1826 (P30)

What is the primary reason for limiting the number of starts for an electric motor in a given period of time?

A. Prevent overheating of the windings due to high starting currents.

B. Prevent overheating of the windings due to shorting within the stator.

C. Prevent rotor damage due to excessive cyclic stresses on the shaft.

D. Prevent rotor damage due to excessive axial displacement of the shaft.

ANSWER: A.

TOPIC: 291005
KNOWLEDGE: K1.06 [2.9/3.1]
QID: B1928 (P1031)

The number of starts for an electric motor in a given period of time should be limited because overheating of the _____ can occur due to the _____ counter electromotive force produced at low rotor speeds.

A. windings; high

B. windings; low

C. commutator and/or slip rings; high

D. commutator and/or slip rings; low

ANSWER: B.

TOPIC: 291005
KNOWLEDGE: K1.06 [2.9/3.1]
QID: B3327 (P3331)

A large centrifugal pump is driven by a 200 horsepower AC induction motor. The motor breaker control circuit contains the following protection devices: instantaneous overcurrent relay, motor thermal overload relay, control power fuses, and an anti-pumping device.

The pump had been manually started and stopped several times during a 5 minute period when the motor breaker tripped. Which one of the following is the most likely cause of the breaker trip?

A. Instantaneous overcurrent.

B. Motor thermal overload.

C. Blown control power fuse.

D. Anti-pumping device actuation.

ANSWER: B.

TOPIC: 291005
KNOWLEDGE: K1.07 [2.6/2.6]
QID: B528

What unit of measurement is used to describe the rate of electron flow?

A. Volt-amp reactive (VAR)

B. Ohm

C. Volt

D. Ampere

ANSWER: D.

TOPIC: 291005
KNOWLEDGE: K1.07 [2.6/2.6]
QID: B628

A difference in electrical potential is measured in...

A. amps.

B. volts.

C. ohms.

D. volt-amps reactive.

ANSWER: B.

TOPIC: 291005
KNOWLEDGE: K1.07 [2.6/2.6]
QID: B828

The force that causes electrons to flow in an electrical circuit is called...

A. power.

B. current.

C. voltage.

D. resistance.

ANSWER: C.

TOPIC: 291005
KNOWLEDGE: K1.07 [2.6/2.6]
QID: B929

What is the significance of a 0.8 power factor when describing the output of a generator?

A. 80 percent of the generator output is being converted to useful power.

B. 80 percent of the generator output is being used by reactive loads.

C. The generator is operating at 80 percent of its maximum rated output.

D. The generator is 80 percent efficient at converting mechanical power to electrical power.

ANSWER: A.

TOPIC: 291005
KNOWLEDGE: K1.07 [2.6/2.6]
QID: B1129

The term "volt" describes...

A. a rate of electron flow.

B. the resistance to current flow.

C. an electrical potential difference.

D. the transfer of circulating currents.

ANSWER: C.

TOPIC: 291005
KNOWLEDGE: K1.07
QID: B3328

A 125 VDC battery is rated at 768 amp-hours for a continuous 50 KW load. Approximately how long will the fully charged battery be able to supply a continuous 50 KW load before the battery rating is exceeded?

A. 115 minutes

B. 90 minutes

C. 75 minutes

D. 60 minutes

ANSWER: A.

TOPIC: 291005
KNOWLEDGE: K1.07 [2.6/2.6]
QID: B5515

A 125 VDC battery is rated at 600 amp-hours for a continuous 50 KW load. Approximately how long will the fully charged battery be able to supply a continuous 50 KW load before the battery rating is exceeded?

A. 115 minutes

B. 90 minutes

C. 75 minutes

D. 60 minutes

ANSWER: B.

TOPIC: 291005
KNOWLEDGE: K1.08 [2.5/2.6]
QID: B29

Which one of the following describes the effects of field current changes on generator excitation and power factor with the generator connected to an infinite power grid?

A. Increasing field current increases excitation and shifts power factor from lagging toward leading.

B. Increasing field current increases excitation and shifts power factor from leading toward lagging.

C. Decreasing field current increases excitation and shifts power factor from lagging toward leading.

D. Decreasing field current increases excitation and shifts power factor from leading toward lagging.

ANSWER: B.

TOPIC: 291005
KNOWLEDGE: K1.08 [2.5/2.6]
QID: B120 (P115)

A main generator that is connected to an infinite power grid has the following initial indications:

100 MW
0 MVAR
2,900 amps
20 KV

If main generator field current is <u>reduced</u> slightly, amps will _____; and MW will _____.

A. increase; decrease

B. decrease; decrease

C. increase; remain the same

D. decrease; remain the same

ANSWER: C.

TOPIC: 291005
KNOWLEDGE: K1.08 [2.5/2.6]
QID: B226 (P1928)

A main generator is connected to an infinite power grid. Which one of the following conditions will exist if the generator is operating underexcited?

A. Negative MVAR (VARs in) with a leading power factor

B. Positive MVAR (VARs out) with a leading power factor

C. Positive MVAR (VARs out) with a lagging power factor

D. Negative MVAR (VARs in) with a lagging power factor

ANSWER: A.

TOPIC: 291005
KNOWLEDGE: K1.08 [2.5/2.6]
QID: B428

A main generator is connected to an infinite power grid with VARs out (positive VARs). Increasing main generator excitation will cause main generator current to _____ and main generator VARs to _____.

A. increase; decrease

B. increase; increase

C. decrease; decrease

D. decrease; increase

ANSWER: B.

TOPIC: 291005
KNOWLEDGE: K1.08 [2.5/2.6]
QID: B529

A main generator that is connected to an infinite power grid has the following indications:

100 MW
100 MVAR (out)
2,800 amps

If main generator field current is reduced slightly, amps will _____; and MW will _____.

A. decrease; decrease

B. increase; decrease

C. decrease; remain the same

D. increase; remain the same

ANSWER: C.

TOPIC: 291005
KNOWLEDGE: K1.08 [2.5/2.6]
QID: B729

A main generator that is connected to an infinite power grid has the following indications:

100 MW
100 MVAR (out)
2,800 amps

If main generator field current is increased slightly, amps will _____; and MW will _____.

A. decrease; increase

B. increase; increase

C. decrease; remain the same

D. increase; remain the same

ANSWER: D.

TOPIC: 291005
KNOWLEDGE: K1.08 [2.5/2.6]
QID: B1030

A main generator is operating in parallel with an infinite power grid with generator VARs currently at zero. If generator field current increases, generator VARs will become _____; and generator power factor will become _____.

A. positive (VARs out); leading

B. negative (VARs in); leading

C. positive (VARs out); lagging

D. negative (VARs in); lagging

ANSWER: C.

TOPIC: 291005
KNOWLEDGE: K1.08 [2.5/2.6]
QID: B1229

A main generator is operating in parallel with an infinite power grid with generator VARs currently at zero. If generator field current is increased, the generator will become _____ and will attain a _____ power factor.

A. overexcited; leading

B. underexcited; lagging

C. underexcited; leading

D. overexcited; lagging

ANSWER: D.

TOPIC: 291005
KNOWLEDGE: K1.08 [2.5/2.6]
QID: B1532 (P2628)

A main generator that is connected to an infinite power grid has the following indications:

100 MW
0 MVAR
2,900 amps
20 KV

If main generator excitation is increased, amps will _____; and MW will _____.

A. remain the same; increase

B. remain the same; remain the same

C. increase; increase

D. increase; remain the same

ANSWER: D.

TOPIC: 291005
KNOWLEDGE: K1.08 [2.5/2.6]
QID: B1729 (P1728)

A main generator that is connected to an infinite power grid has the following indications:

600 MW
100 MVAR (in)
13,800 amps
25 KV

If main generator excitation current is decreased slightly, amps will _____; and MVAR will _____.

A. decrease; increase

B. increase; increase

C. decrease; decrease

D. increase; decrease

ANSWER: B.

TOPIC: 291005
KNOWLEDGE: K1.08 [2.5/2.6]
QID: B1830 (P1428)

A main generator that is connected to an infinite power grid has the following indications:

600 MW
100 MVAR (in)
13,800 amps
25 KV

If main generator excitation current is increased slightly, amps will _____; and MW will _____.

A. decrease; increase

B. increase; increase

C. decrease; remain the same

D. increase; remain the same

ANSWER: C.

TOPIC: 291005
KNOWLEDGE: K1.08 [2.5/2.6]
QID: B2028 (P2027)

A diesel generator (DG) is supplying both KW and KVAR to an electrical bus that is connected to an infinite power grid. Assuming DG and bus voltage do <u>not</u> change, if the DG voltage regulator setpoint is increased slightly, DG KW will _____; and DG amps will _____.

A. remain the same; increase

B. remain the same; remain the same

C. increase; increase

D. increase; remain the same

ANSWER: A.

TOPIC: 291005
KNOWLEDGE: K1.08 [2.5/2.6]
QID: B2128 (P928)

A main generator is operating in parallel with an infinite power grid. If the generator field current is slowly and continuously decreased, the generator will experience high current due to: (Assume no generator protective actuations occur.)

A. excessive generator MW.

B. excessive generator MVAR out.

C. excessive generator MVAR in.

D. generator reverse power.

ANSWER: C.

TOPIC: 291005
KNOWLEDGE: K1.08 [2.5/2.6]
QID: B2330 (P2328)

A main generator that is connected to an infinite power grid has the following indications:

600 MW
100 MVAR (out)
13,800 amps
25 KV

If main generator field current is decreased, amps will initially _____; and MVAR will initially _____.

A. decrease; increase

B. increase; increase

C. decrease; decrease

D. increase; decrease

ANSWER: C.

TOPIC: 291005
KNOWLEDGE: K1.08 [2.5/2.6]
QID: B2444 (P2439)

Two identical 1,000 MW generators are operating in parallel, supplying all the loads on an isolated electrical bus. The generator output breakers provide identical protection for the generators. Generator A and B output indications are as follows:

Generator A	Generator B
28 KV	28 KV
60 Hertz	60 Hertz
150 MW	100 MW
25 MVAR (out)	50 MVAR (out)

A malfunction causes the voltage regulator setpoint for generator B to slowly and continuously decrease. If no operator action is taken, the electrical current indication for generator B will...

A. initially decrease, and then increase until the output breaker for generator A trips on overcurrent.

B. initially decrease, and then increase until the output breaker for generator B trips on overcurrent.

C. decrease continuously until the output breaker for generator A trips on overcurrent.

D. decrease continuously until the output breaker for generator B trips on reverse power.

ANSWER: A.

TOPIC: 291005
KNOWLEDGE: K1.08 [2.5/2.6]
QID: B2530 (P2528)

A diesel generator (DG) is supplying both KW and KVAR to an electrical bus that is connected to an infinite power grid. Assuming bus voltage does not change, if the DG voltage regulator setpoint is decreased slightly, DG KW will _____; and DG amps will _____.

A. remain the same; decrease

B. remain the same; remain the same

C. decrease; decrease

D. decrease; remain the same

ANSWER: A.

TOPIC: 291005
KNOWLEDGE: K1.08 [2.5/2.6]
QID: B2543 (P2540)

Two identical 1,000 MW generators are operating in parallel supplying the same isolated electrical bus. The generator output breakers also provide identical protection for the generators. Generator A and B output indications are as follows:

Generator A	Generator B
22 KV	22 KV
60.2 Hertz	60.2 Hertz
200 MW	200 MW
25 MVAR (out)	50 MVAR (out)

A malfunction causes the voltage regulator setpoint for generator A to slowly and continuously increase. If no operator action is taken, generator B output current will...

A. initially decrease, and then increase until the output breaker for generator A trips on overcurrent.

B. initially decrease, and then increase until the output breaker for generator B trips on overcurrent.

C. increase continuously until the output breaker for generator A trips on overcurrent.

D. increase continuously until the output breaker for generator B trips on overcurrent.

ANSWER: A.

TOPIC: 291005
KNOWLEDGE: K1.08 [2.5/2.6]
QID: B2729 (P2728)

A main generator is supplying power to an infinite power grid. If the generator field current is slowly and continuously increased, the generator will experience high current due to: (Assume no generator protective actuations occur.)

A. generator reverse power.

B. excessive generator MW.

C. excessive generator MVAR in.

D. excessive generator MVAR out.

ANSWER: D

TOPIC: 291005
KNOWLEDGE: K1.08 [2.5/2.6]
QID: B3344 (P2041)

Two identical 1,000 MW generators are operating in parallel, supplying the same isolated electrical bus. The generator output breakers provide identical protection for the generators. Generator A and B output indications are as follows:

Generator A	Generator B
22.5 KV	22.5 KV
60.2 Hertz	60.2 Hertz
750 MW	750 MW
25 MVAR (out)	50 MVAR (out)

A malfunction causes the voltage regulator setpoint for generator B to slowly and continuously increase. If no operator action is taken, which one of the following describes the electrical current indications for generator A?

A. Current will decrease continuously until the output breaker for generator A trips on reverse power.

B. Current will decrease continuously until the output breaker for generator B trips on reverse power.

C. Current will initially decrease, and then increase until the output breaker for generator A trips on overcurrent.

D. Current will initially decrease, and then increase until the output breaker for generator B trips on overcurrent.

ANSWER: D.

TOPIC: 291005
KNOWLEDGE: K1.08 [2.5/2.6]
QID: B3543 (P2838)

Two identical 1,000 MW generators are operating in parallel supplying the same isolated electrical bus. The generator output breakers provide identical protection for the generators. Generator A and B output indications are as follows:

Generator A	Generator B
22 KV	22 KV
60.2 Hertz	60.2 Hertz
800 MW	800 MW
50 MVAR (out)	25 MVAR (in)

A malfunction causes the voltage regulator for generator B to slowly and continuously increase the terminal voltage for generator B. If no operator action is taken, generator B output current will...

A. increase continuously until the output breaker for generator A trips on overcurrent.

B. increase continuously until the output breaker for generator B trips on overcurrent.

C. initially decrease, and then increase until the output breaker for generator A trips on overcurrent.

D. initially decrease, and then increase until the output breaker for generator B trips on overcurrent.

ANSWER: D.

TOPIC: 291005
KNOWLEDGE: K1.08 [2.5/2.6]
QID: B3629 (P3629)

A main turbine-generator is operating in parallel with an infinite power grid. If the turbine control valves (or throttle valves) slowly fail open, the generator will experience high current primarily due to... (Assume no generator protective actuations occur.)

A. excessive generator MW.

B. excessive generator VARs out.

C. excessive generator VARs in.

D. generator reverse power.

ANSWER: A.

TOPIC: 291005
KNOWLEDGE: K1.08 [2.5/2.6]
K1.09 [2.3/2.6]
QID: B4115 (P4115)

A main generator is operating and connected to an infinite power grid. Elevated main generator winding temperature requires a reduction in reactive load from 200 MVAR (out) to 150 MVAR (out). To accomplish the reactive load reduction, the operator must _____ the generator field current; when generator reactive load equals 150 MVAR (out) the generator power factor will be _____ than the initial power factor.

A. increase; larger

B. increase; smaller

C. decrease; larger

D. decrease; smaller

ANSWER: C.

TOPIC: 291005
KNOWLEDGE: K1.08 [2.5/2.6]
: K1.09 [2.3/2.6]
QID: B4315 (P6515)

A main generator is connected to an infinite power grid with the following generator output parameters:

22 KV
60 Hertz
575 MW
100 MVAR (out)

Which one of the following contains a combination of manual adjustments to the main generator voltage regulator and speed control setpoints such that each adjustment will initially result in main generator operation at a power factor closer to 1.0.

	Voltage Setpoint	Speed Setpoint
A.	Increase	Increase
B.	Increase	Decrease
C.	Decrease	Increase
D.	Decrease	Decrease

ANSWER: C.

TOPIC: 291005
KNOWLEDGE: K1.08 [2.5/2.6]
QID: B4615 (P4620)

Two identical 1,000 MW generators are operating in parallel supplying the same isolated electrical bus. The generator output breakers provide identical protection for the generators. Generator A and B output indications are as follows:

Generator A	Generator B
22 KV	22 KV
60.2 Hertz	60.2 Hertz
200 MW	200 MW
25 MVAR (out)	50 MVAR (out)

A malfunction causes the voltage regulator setpoint for generator B to slowly and continuously increase. If no operator action is taken, generator A output current will...

A. increase continuously until the output breaker for generator A trips on overcurrent.

B. decrease continuously until the output breaker for generator B trips on overcurrent.

C. initially decrease, and then increase until the output breaker for generator A trips on overcurrent.

D. initially decrease, and then increase until the output breaker for generator B trips on overcurrent.

ANSWER: D.

TOPIC: 291005
KNOWLEDGE: K1.08 [2.5/2.6]
K1.09 [2.3/2.6]
QID: B5015

A main generator is connected to an infinite power grid with the following generator output parameters:

22 KV
60 Hertz
600 MW
100 MVAR (in)

Which one of the following contains a combination of manual adjustments to the main generator voltage regulator and speed control setpoints such that each adjustment will initially result in main generator operation at a power factor closer to 1.0. (Assume the generator power factor remains less than 1.0.)

	Voltage Setpoint	Speed Setpoint
A.	Increase	Increase
B.	Increase	Decrease
C.	Decrease	Increase
D.	Decrease	Decrease

ANSWER: A.

TOPIC: 291005
KNOWLEDGE: K1.08 [2.5/2.6]
QID: B5415 (P5414)

A main generator is connected to an infinite power grid. Which one of the following pairs of main generator output parameters places the generator in the closest proximity to slipping a pole.

A. 800 MW; 200 MVAR (in)

B. 800 MW; 600 MVAR (in)

C. 400 MW; 200 MVAR (out)

D. 400 MW; 600 MVAR (out)

ANSWER: B.

TOPIC: 291005
KNOWLEDGE: K1.08 [2.5/2.6]
QID: B6014 (P6014)

During a surveillance test, a 4,000 KW diesel generator (DG) and a 1,000 MW main generator (MG) at a nuclear power plant are connected to the same power grid.

The following stable generator output conditions exist:

Diesel Generator	Main Generator
700 KW	800 MW
200 KVAR (out)	100 MVAR (out)

A malfunction then occurs, causing the voltage regulator for the MG to slowly and continuously increase the MG field current. If no operator action is taken, the DG output current will _____ until a breaker trip separates the generators.

A. remain about the same

B. increase continuously

C. initially increase, and then decrease

D. initially decrease, and then increase

ANSWER: D.

TOPIC: 291005
KNOWLEDGE: K1.08 [2.5/2.6]
K1.09 [2.3/2.6]
QID: B6115 (P6114)

A main generator is connected to an infinite power grid with the following generator output parameters:

22 KV
60 Hertz
575 MW
100 MVAR (in)

Which one of the following contains a combination of minor adjustments to the main generator voltage regulator and speed control setpoints such that each adjustment will cause the main generator to operate at a power factor closer to 1.0. (Assume that generator power factor remains less than 1.0.)

	Voltage Setpoint	Speed Setpoint
A.	Increase	Increase
B.	Increase	Decrease
C.	Decrease	Increase
D.	Decrease	Decrease

ANSWER: A.

TOPIC: 291005
KNOWLEDGE: K1.08 [2.5/2.6]
QID: B6314 (P6315)

A main turbine-generator is connected to an infinite power grid with the following generator output parameters:

25 KV
20,000 amps
830 MW
248 MVAR (out)

Which one of the following will significantly increase main generator output current <u>without</u> a significant change in main generator real load? (Assume that generator power factor remains less than 1.0.)

A. Increasing the main turbine speed control setpoint.

B. Increasing the main generator voltage regulator setpoint.

C. A 10 percent decrease in power grid electrical loads.

D. A 10 percent increase in power grid electrical loads.

ANSWER: B

TOPIC: 291005
KNOWLEDGE: K1.08 [2.5/2.6]
QID: B6615 (P6614)

During a surveillance test, a 4,000 KW diesel generator (DG) and a 1,000 MW main generator (MG) at a nuclear power plant are connected to a power grid.

The following stable generator output conditions initially exist:

Diesel Generator	Main Generator
700 KW	800 MW
200 KVAR (out)	100 MVAR (out)

A malfunction then occurs, causing the voltage regulator for the MG to slowly and continuously decrease the MG field current. If no operator action is taken, the DG output current will _____ until a breaker trip separates the generators.

A. increase continuously

B. decrease continuously

C. initially increase, and then decrease

D. initially decrease, and then increase

ANSWER: A.

TOPIC: 291005
KNOWLEDGE: K1.08 [2.5/2.6]
QID: B6915 (P6914)

A main generator is connected to an infinite power grid with the following generator output parameters:

100 MW
0 MVAR
2,625 amps
22 KV

If the main generator field current is decreased, main generator amps will initially _____; and MW will initially _____.

A. decrease; decrease

B. increase; decrease

C. decrease; remain the same

D. increase; remain the same

ANSWER: D.

TOPIC: 291005
KNOWLEDGE: K1.09 [2.3/2.6]
QID: B329

A main generator is operating with the following output parameters:

24 KV
20,700 amps
800 MW
325 MVAR (in)

What is the power factor of the main generator?

A. 0.93 leading

B. 0.93 lagging

C. 0.81 leading

D. 0.81 lagging

ANSWER: A.

TOPIC: 291005
KNOWLEDGE: K1.09 [2.3/2.6]
QID: B630

A 4.16 KV diesel generator (DG) is loaded to 2,850 KW with a 0.85 power factor. What is the approximate KVAR load on the DG?

A. 503 KVAR

B. 1,766 KVAR

C. 2,850 KVAR

D. 3,353 KVAR

ANSWER: B.

TOPIC: 291005
KNOWLEDGE: K1.09 [2.3/2.6]
QID: B930

A 125 VDC motor is rated at 10 KW. What is the current rating for the motor?

A. 4.6 amps

B. 8.0 amps

C. 46.2 amps

D. 80.0 amps

ANSWER: D.

TOPIC: 291005
KNOWLEDGE: K1.09 [2.3/2.6]
QID: B1529 (P2228)

A diesel generator (DG) is supplying an electrical bus that is connected to an infinite power grid. Assuming DG terminal voltage and bus frequency do not change, if the DG governor setpoint is increased from 60 Hz to 60.1 Hz, DG KVAR will be _____; and DG amps will be _____.

A. the same; higher

B. the same; the same

C. higher; higher

D. higher; the same

ANSWER: A.

TOPIC: 291005
KNOWLEDGE: K1.09 [2.3/2.6]
QID: B2029 (P1128)

If the voltage supplied by an AC generator to an isolated electrical bus is held constant while loads (KW only) are added to the bus, the current supplied by the generator will increase in direct proportion to the _____ of the change in KW. (Assume power factor does not change.)

A. cube root

B. square root

C. amount

D. square

ANSWER: C.

TOPIC: 291005
KNOWLEDGE: K1.09 [2.3/2.6]
QID: B2929

Refer to the drawing of an electrical system power triangle (see figure below).

Which one of the following represents the power factor for this system?

A. A divided by B

B. A divided by C

C. B divided by A

D. B divided by C

ANSWER: D.

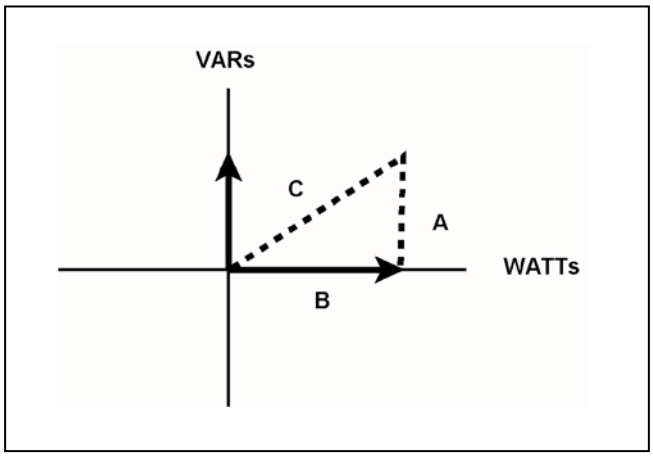

TOPIC: 291005
KNOWLEDGE: K1.09 [2.3/2.6]
QID: B3130 (P3142)

A nuclear power plant was initially operating at 80 percent power in the middle of a fuel cycle with the main generator connected to an infinite power grid with the following main generator output parameters:

60 Hz
25 KV
300 MVAR (out)
800 MW

A hydraulic oil system malfunction occurred that caused the main turbine steam inlet valves to slowly drift closed. After 10 minutes, the main generator real load decreased to 600 MW. Assuming no operator actions were taken, how were the remaining main generator output parameters affected after the above 10 minute period?

	Frequency (Hz)	Voltage (KV)	Reactive Load (MVAR)
A.	Decreased	Decreased	No change
B.	Decreased	No change	Decreased
C.	No change	No change	No change
D.	No change	Decreased	Decreased

ANSWER: C.

TOPIC: 291005
KNOWLEDGE: K1.09 [2.3/2.6]
QID: B4015

Refer to the drawing of an electrical system power curve (see figure below).

If the system is operating at point A, which one of the following is the power factor for this system?

A. 0.80

B. 0.88

C. 0.93

D. 0.97

ANSWER: D.

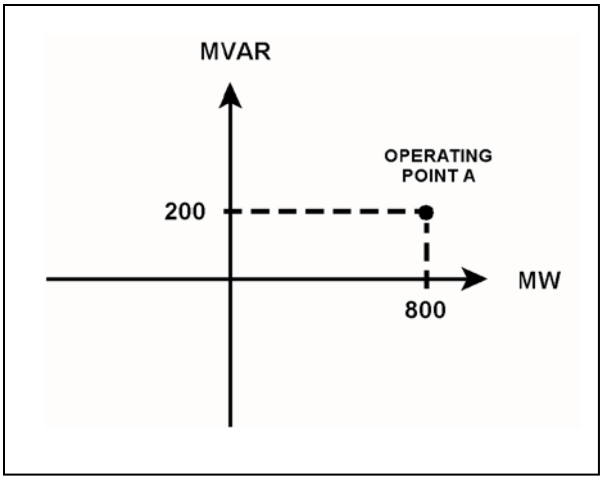

TOPIC: 291005
KNOWLEDGE: K1.09 [2.3/2.6]
QID: B4415

A main generator is supplying 300 MVAR to the power grid with a 0.85 power factor. What is the approximate MW load on the main generator?

A. 186 MW

B. 353 MW

C. 484 MW

D. 569 MW

ANSWER: C.

TOPIC: 291005
KNOWLEDGE: K1.09 [2.3/2.6]
QID: B4815 (P4814)

A main generator is connected to an infinite power grid with the following generator output parameters:

22 KV
60 Hertz
575 MW
100 MVAR (in)

Which one of the following contains a combination of manual adjustments to the main generator voltage regulator and speed control setpoints such that <u>each</u> adjustment will initially result in a decrease in main generator amps?

	Voltage Setpoint	Speed Setpoint
A.	Increase	Increase
B.	Increase	Decrease
C.	Decrease	Increase
D.	Decrease	Decrease

ANSWER: B.

TOPIC: 291005
KNOWLEDGE: K1.09 [2.3/2.6]
QID: B6415

A main generator has the following output parameters:

830 MW
25 KV
20,000 amps

What is the reactive power for this generator?

A. 36 MVAR

B. 143 MVAR

C. 247 MVAR

D. 330 MVAR

ANSWER: C.

TOPIC: 291005
KNOWLEDGE: K1.09 [2.3/2.6]
QID: B6515

A main generator is supplying 300 MVAR with a 0.90 power factor. What is the approximate MW load on the main generator?

A. 145 MW

B. 270 MW

C. 484 MW

D. 619 MW

ANSWER: D.

TOPIC: 291006
KNOWLEDGE: K1.01 [2.7/2.7]
QID: B104

Which one of the following describes the proper sequence for placing a steam (shell) and water (tube) heat exchanger into service?

A. The water side is valved in before the steam side to minimize thermal shock.

B. The water side is valved in before the steam side to ensure adequate venting.

C. The steam side is valved in before the water side to minimize scale buildup on the heat exchanger tubes.

D. The steam side is valved in before the water side to ensure that the cooldown rate does not exceed 100°F/hr.

ANSWER: A.

TOPIC: 291006
KNOWLEDGE: K1.02 [2.6/2.6]
QID: B36

Why is proper venting of a shell-and-tube heat exchanger important?

A. An air bubble reduces the heat transfer coefficient of the heat exchanger.

B. An air bubble causes pressure transients within the tubes as heat load changes.

C. An air bubble will cause thermal shock as it moves through the heat exchanger.

D. An air bubble will cause corrosion in the heat exchanger.

ANSWER: A.

TOPIC: 291006
KNOWLEDGE: K1.02 [2.6/2.6]
QID: B531

A liquid-to-liquid heat exchanger containing trapped air on the shell side will be less efficient because the air...

A. causes more turbulent fluid flow.

B. increases the differential temperature across the tubes.

C. reduces the fluid contact with the heat transfer surface.

D. causes pressure oscillations.

ANSWER: C.

TOPIC: 291006
KNOWLEDGE: K1.02 [2.6/2.6]
QID: B932

Reduced heat transfer performance in a heat exchanger will result from...

A. tube wall thinning.

B. turbulent flow in the tubes.

C. increased ΔT between fluids.

D. gas collection in the shell.

ANSWER: D.

TOPIC: 291006
KNOWLEDGE: K1.03 [2.4/2.6]
QID: B631 (P1832)

The rate of heat transfer between two liquids in a heat exchanger will increase if the: (Assume single-phase conditions and a constant specific heat for each liquid.)

A. flow rate of the colder liquid decreases by 10 percent.

B. flow rate of the hotter liquid increases by 10 percent.

C. inlet temperatures of both liquids decrease by 20°F.

D. inlet temperatures of both liquids increase by 20°F.

ANSWER: B.

TOPIC: 291006
KNOWLEDGE: K1.03 [2.4/2.6]
QID: B832 (P1632)

The rate of heat transfer between two liquids in a single-phase heat exchanger will decrease if the... (Assume constant specific heat capacities.)

A. inlet temperatures of both liquids decrease by 20°F.

B. inlet temperatures of both liquids increase by 20°F.

C. flow rate of the colder liquid decreases by 10 percent.

D. flow rate of the hotter liquid increases by 10 percent.

ANSWER: C.

TOPIC: 291006
KNOWLEDGE: K1.03 [2.4/2.6]
QID: B1432 (P1432)

The rate of heat transfer between two liquids in a heat exchanger will <u>increase</u> if the: (Assume single-phase conditions and a constant specific heat.)

A. temperature of the hotter liquid decreases by 20°F.

B. temperature of the colder liquid increases by 20°F.

C. flow rates of both liquids decrease by 10 percent.

D. flow rates of both liquids increase by 10 percent.

ANSWER: D.

TOPIC: 291006
KNOWLEDGE: K1.03 [2.4/2.6]
QID: B1732 (P1732)

Which one of the following will reduce the rate of heat transfer between two liquids in a heat exchanger? (Assume single-phase conditions and a constant specific heat for both liquids.)

A. The inlet temperatures of both liquids decrease by 20°F.

B. The inlet temperatures of both liquids increase by 20°F.

C. The inlet temperature of the hotter liquid increases by 20°F.

D. The inlet temperature of the colder liquid increases by 20°F.

ANSWER: D.

TOPIC: 291006
KNOWLEDGE: K1.03 [2.4/2.6]
QID: B2531 (P2632)

The rate of heat transfer between two liquids in a heat exchanger will decrease if the: (Assume single-phase conditions and a constant specific heat for both liquids.)

A. inlet temperature of the hotter liquid increases by 20°F.

B. inlet temperature of the colder liquid decreases by 20°F.

C. flow rates of both liquids decrease by 10 percent.

D. flow rates of both liquids increase by 10 percent.

ANSWER: C.

TOPIC: 291006
KNOWLEDGE: K1.03 [2.4/2.6]
QID: B3631 (P3632)

Refer to the drawing of an operating water cleanup system (see figure below).

If cooling water flow rate is 1.0 x 10^6 lbm/hr, what is the approximate water flow rate in the cleanup system?

A. 2.2 x 10^5 lbm/hr

B. 3.2 x 10^5 lbm/hr

C. 2.2 x 10^6 lbm/hr

D. 3.2 x 10^6 lbm/hr

ANSWER: A.

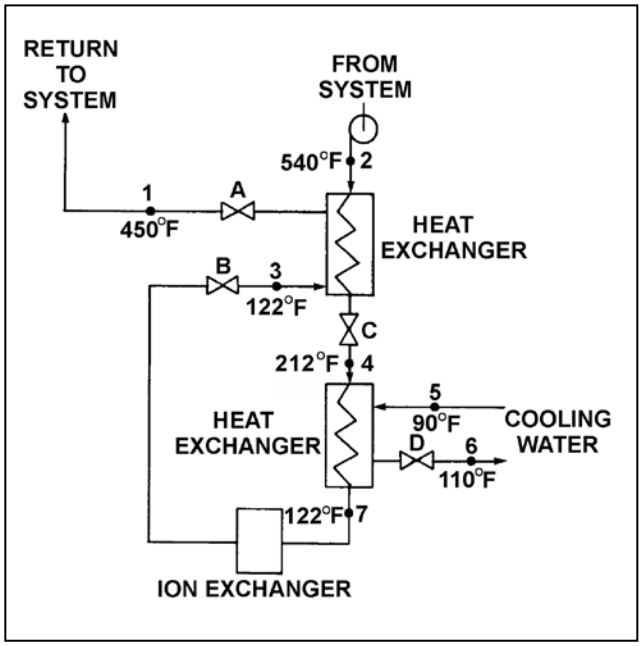

TOPIC: 291006
KNOWLEDGE: K1.04 [2.8/2.8]
QID: B632 (P3232)

Refer to the drawing of an operating water cleanup system (see figure below).

Valves A, B, and D are fully open and valve C is 50 percent open. If valve C is opened to 100 percent, how will the temperatures at points 3 and 6 be affected?

	Point 3	Point 6
A.	Decrease	Decrease
B.	Decrease	Increase
C.	Increase	Decrease
D.	Increase	Increase

ANSWER: D.

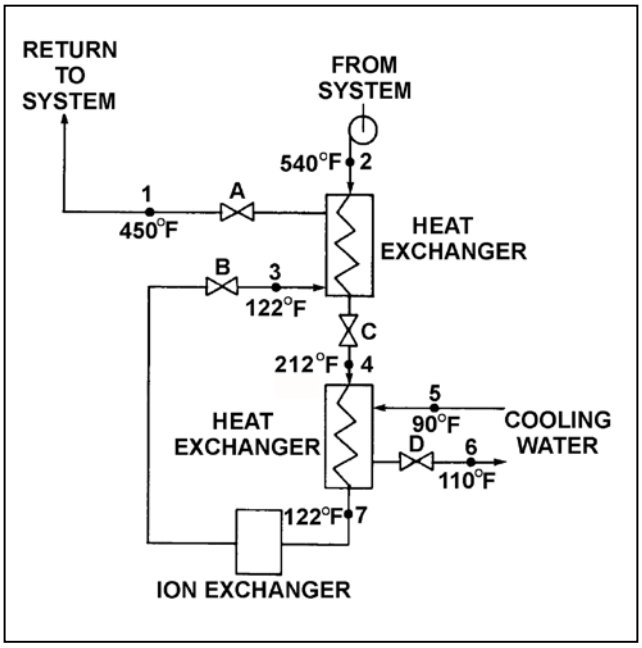

TOPIC: 291006
KNOWLEDGE: K1.04 [2.8/2.8]
QID: B1031 (P1032)

Refer to the drawing of an operating water cleanup system (see figure below).

Valves A, B, and C are fully open. Valve D is 20 percent open. If valve D is opened to 100 percent, the temperature at point...

A. 3 will increase.

B. 4 will decrease.

C. 5 will decrease.

D. 7 will increase.

ANSWER: B.

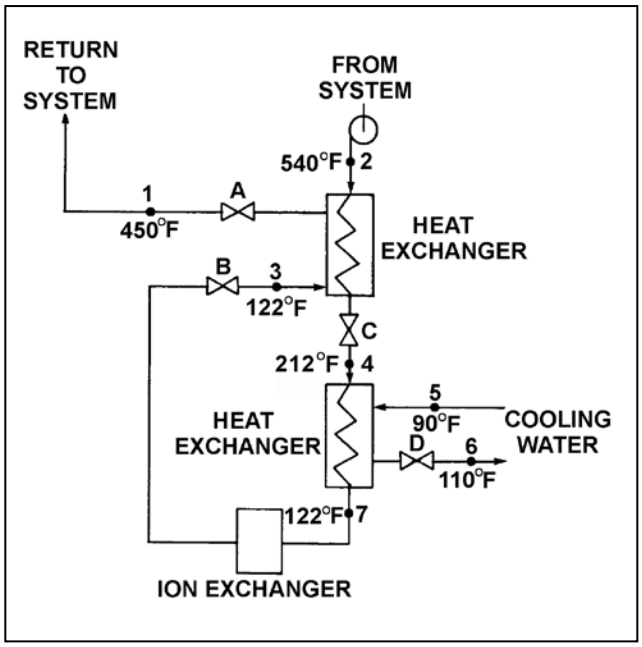

TOPIC: 291006
KNOWLEDGE: K1.04 [2.8/2.8]
QID: B1834 (P732)

Refer to the drawing of an operating water cleanup system (see figure below).

Valves A, B, and C are fully open. Valve D is 80 percent open. If valve D is throttled to 50 percent, the temperature at point...

A. 3 will decrease.

B. 4 will increase.

C. 5 will increase.

D. 6 will decrease.

ANSWER: B.

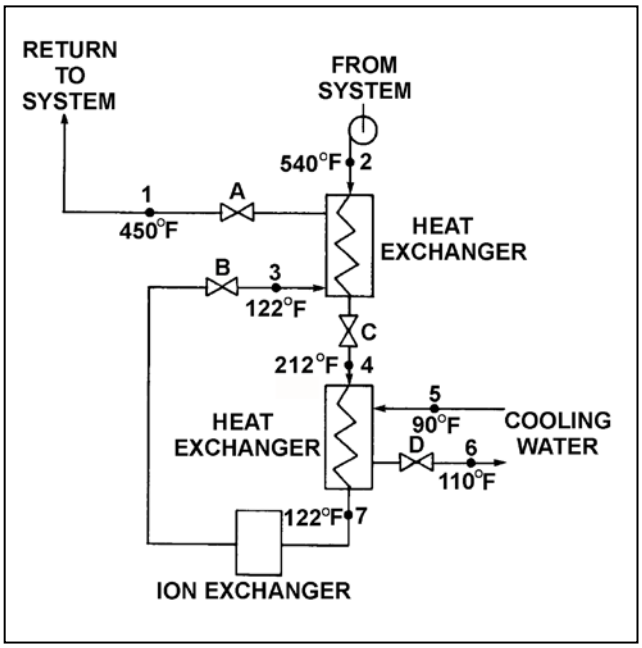

TOPIC: 291006
KNOWLEDGE: K1.04 [2.8/2.8]
QID: B1930 (P3332)

Refer to the drawing of an operating water cleanup system (see figure below). All valves are identical and are initially 50 percent open.

To raise the temperature at point 7, the operator can adjust valve _____ in the close direction.

A. A

B. B

C. C

D. D

ANSWER: D.

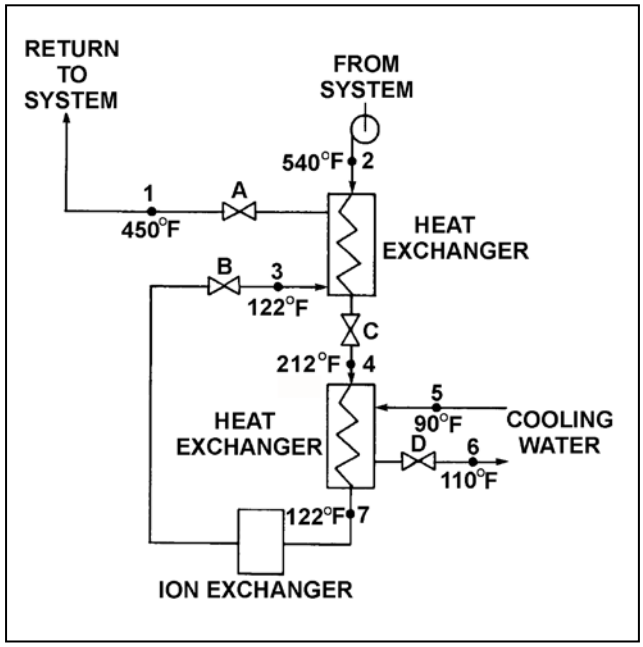

TOPIC: 291006
KNOWLEDGE: K1.04 [2.8/2.8]
QID: B6716 (P6716)

A reactor is shut down with core decay heat being removed by the residual heat removal (RHR) system. Assume that only the RHR heat exchangers are removing heat from the reactor vessel (RV), and that the RHR system provides complete thermal mixing of the RV.

Given the following information:

Reactor core rated thermal power	=	2,950 MW
Core decay heat rate	=	0.5% rated thermal power
RHR system heat removal rate	=	5.3×10^7 Btu/hr
Reactor coolant c_p	=	1.05 Btu/lbm-°F
Combined RV and RHR inventory	=	425,000 lbm

Which one of the following actions will establish a reactor cooldown rate between 20°F/hour and 30°F/hour?

A. Increase RHR heat exchanger flow rate to increase the cooldown rate by 10°F/hour.

B. Increase RHR heat exchanger flow rate to increase the cooldown rate by 20°F/hour.

C. Reduce RHR heat exchanger flow rate to decrease the cooldown rate by 10°F/hour.

D. Reduce RHR heat exchanger flow rate to decrease the cooldown rate by 20°F/hour.

ANSWER: B.

TOPIC: 291006
KNOWLEDGE: K1.04 [2.8/2.8]
QID: B7117

A nuclear power plant is shut down with core decay heat being removed by the residual heat removal (RHR) system. Assume that only the RHR heat exchangers are removing heat from the reactor vessel (RV), and that the RHR system provides complete thermal mixing in the RV.

Given the following information:

Reactor core rated thermal power	=	2,950 MW
Core decay heat rate	=	0.5% rated thermal power
RHR system heat removal rate	=	5.7×10^7 Btu/hr
RHR and reactor coolant c_p	=	1.05 Btu/lbm-°F
Combined RV and RHR inventory	=	450,000 lbm

Which one of the following actions will establish a reactor cooldown rate between 20°F/hour and 30°F/hour?

A. Increase RHR heat exchanger flow rate to increase the cooldown rate by 10°F/hour.

B. Increase RHR heat exchanger flow rate to increase the cooldown rate by 20°F/hour.

C. Reduce RHR heat exchanger flow rate to decrease the cooldown rate by 10°F/hour.

D. Reduce RHR heat exchanger flow rate to decrease the cooldown rate by 20°F/hour.

ANSWER: A.

TOPIC: 291006
KNOWLEDGE: K1.07 [2.7/2.8]
QID: B31

Decreasing the temperature of the lube oil leaving a lube oil heat exchanger is normally accomplished by...

A. increasing the cooling water flow rate.

B. increasing the lube oil flow rate.

C. decreasing the cooling water flow rate.

D. decreasing the lube oil flow rate.

ANSWER: A.

TOPIC: 291006
KNOWLEDGE: K1.07 [2.9/3.0]
QID: B101

Refer to the drawing of an operating water cleanup system (see figure below).

All valves are identical and are initially 50 percent open. The temperature at point 3 is exceeding operating limits. To lower the temperature at point 3, the operator can adjust valve _____ in the open direction.

A. A

B. B

C. C

D. D

ANSWER: D.

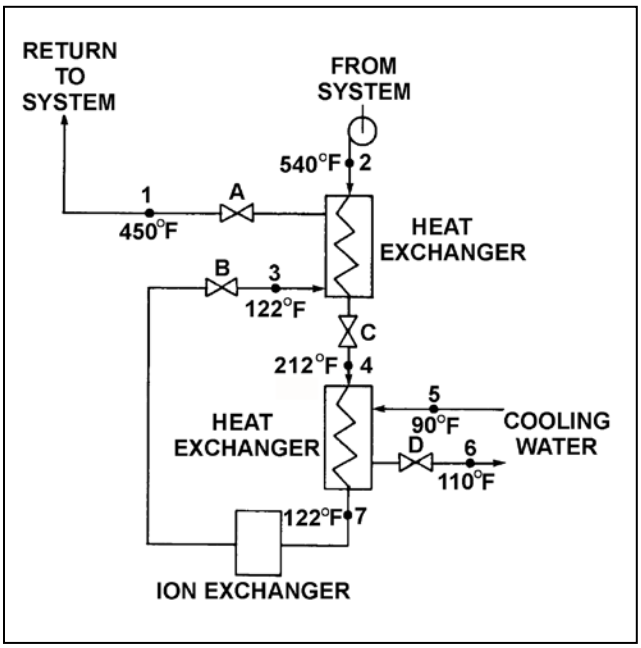

TOPIC: 291006
KNOWLEDGE: K1.07 [2.7/2.8]
QID: B231 (P104)

Refer to the drawing of an operating water cleanup system (see figure below).

All valves are identical and are initially 50 percent open. To lower the temperature at point 7, the operator can adjust valve _____ in the open direction.

A. A

B. B

C. C

D. D

ANSWER: D.

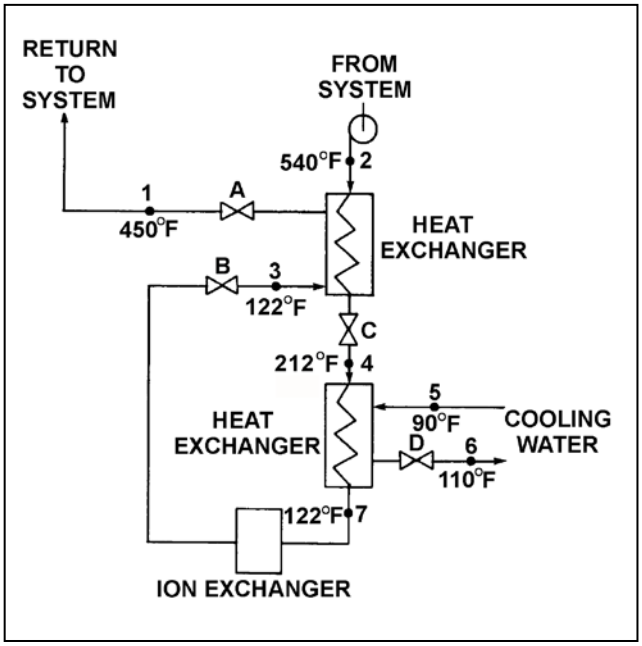

TOPIC: 291006
KNOWLEDGE: K1.07 [2.7/2.8]
QID: B1231 (P1231)

Refer to the drawing of an operating water cleanup system (see figure below).

All valves are identical and are initially 50 percent open. To lower the temperature at point 4, the operator can adjust valve _____ in the _____ direction.

A. A; open

B. B; shut

C. C; open

D. D; shut

ANSWER: B.

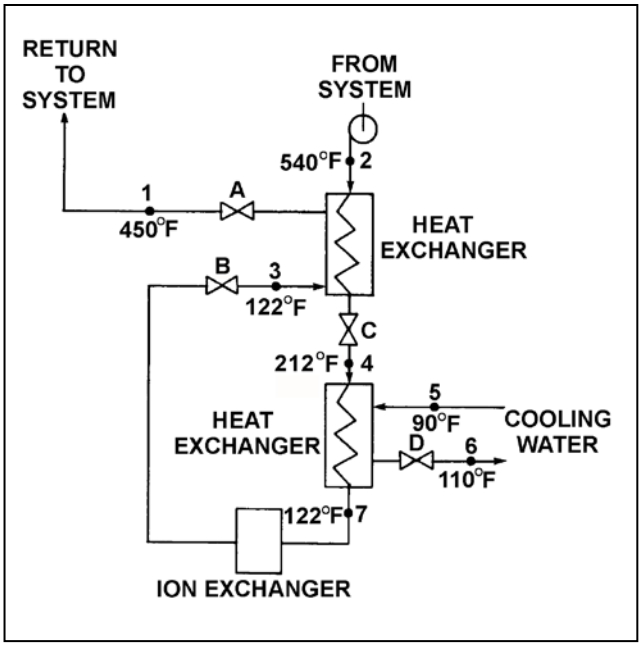

TOPIC: 291006
KNOWLEDGE: K1.07 [2.7/2.8]
QID: B2732 (P2732)

Refer to the drawing of an operating water cleanup system (see figure below).

All valves are identical and are initially 50 percent open. To raise the temperature at point 4, the operator can adjust valve _____ in the _____ direction.

A. A; shut

B. B; shut

C. C; open

D. D; open

ANSWER: C.

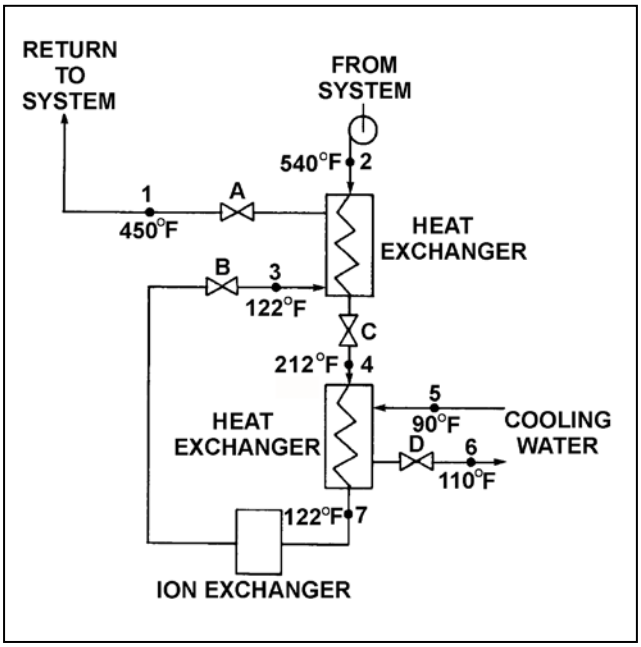

TOPIC: 291006
KNOWLEDGE: K1.07 [2.6/2.8]
QID: B3832 (P3833)

A main turbine-generator was operating at 80 percent load with the following initial steady-state lube oil and cooling water temperatures for the main turbine lube oil heat exchanger:

$T_{oil\ in}$ = 174°F
$T_{oil\ out}$ = 114°F
$T_{water\ in}$ = 85°F
$T_{water\ out}$ = 115°F

Six months later, the following current steady-state heat exchanger temperatures are observed:

$T_{oil\ in}$ = 177°F
$T_{oil\ out}$ = 111°F
$T_{water\ in}$ = 85°F
$T_{water\ out}$ = 115°F

Assume that the total heat exchanger heat transfer coefficient and the cooling water mass flow rate do not change, and that the specific heat values for the cooling water and lube oil do not change. Also assume that the lube oil system is a closed system.

Which one of the following could be responsible for the differences between the initial and current steady-state heat exchanger temperatures?

A. The current main turbine-generator load is lower than the initial load.

B. The current main turbine-generator load is higher than the initial load.

C. The current main turbine lube oil mass flow rate is less than the initial flow rate.

D. The current main turbine lube oil mass flow rate is greater than the initial flow rate.

ANSWER: C.

TOPIC: 291006
KNOWLEDGE: K1.07 [2.6/2.8]
QID: B5317 (P5316)

A main turbine-generator was operating at 80 percent load with the following initial steady-state lube oil and cooling water temperatures for the main turbine lube oil heat exchanger:

$T_{oil\ in}$ = 174°F
$T_{oil\ out}$ = 114°F
$T_{water\ in}$ = 85°F
$T_{water\ out}$ = 115°F

Six months later, the current steady-state heat exchanger temperatures are:

$T_{oil\ in}$ = 174°F
$T_{oil\ out}$ = 120°F
$T_{water\ in}$ = 85°F
$T_{water\ out}$ = 120°F

Assume that the lube oil mass flow rate does not change, and that the specific heat values for the cooling water and lube oil do not change. Also assume that the main turbine lube oil system is a closed system.

The differences between the initial and current steady-state heat exchanger temperatures could be caused by the current main turbine-generator load being _____ with the current heat exchanger cooling water mass flow rate being _____.

A. higher; lower

B. higher; higher

C. lower; lower

D. lower; higher

ANSWER: C.

TOPIC: 291006
KNOWLEDGE: K1.07 [2.7/2.8]
QID: B5716 (P5716)

Refer to the drawing of an operating parallel-flow lube oil heat exchanger (see figure below). Assume that lube oil (LO) inlet temperature is greater than cooling water (CW) inlet temperature.

Unlike a counter-flow heat exchanger, in a parallel-flow heat exchanger the _____ temperature can never be greater than the _____ temperature.

A. LO outlet; CW inlet

B. LO outlet; CW outlet

C. CW outlet; LO inlet

D. CW outlet; LO outlet

ANSWER: D.

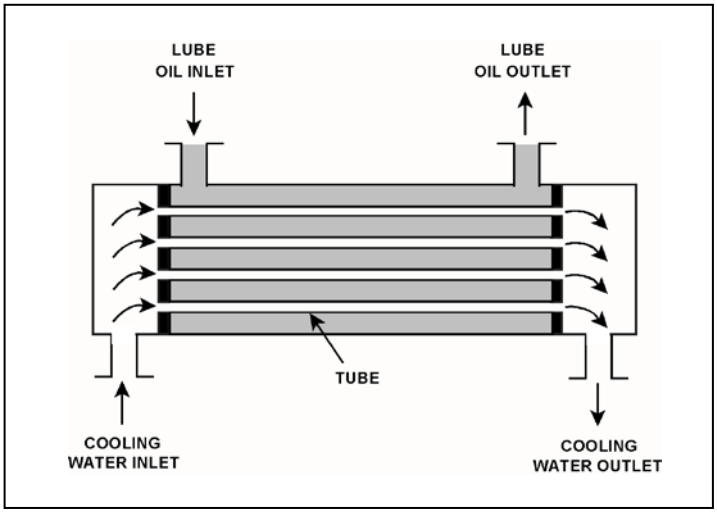

TOPIC: 291006
KNOWLEDGE: K1.07 [2.7/2.8]
QID: B5917 (P5916)

Refer to the drawing of an operating process water cleanup system (see figure below).

Assume there is no heat loss from the process water cleanup system to the surroundings and the process water flow rate does not change. If valve D closes fully, what will be the final steady-state temperature of the process water flowing through the filter?

A. 212°F

B. 302°F

C. 450°F

D. 540°F

ANSWER: D.

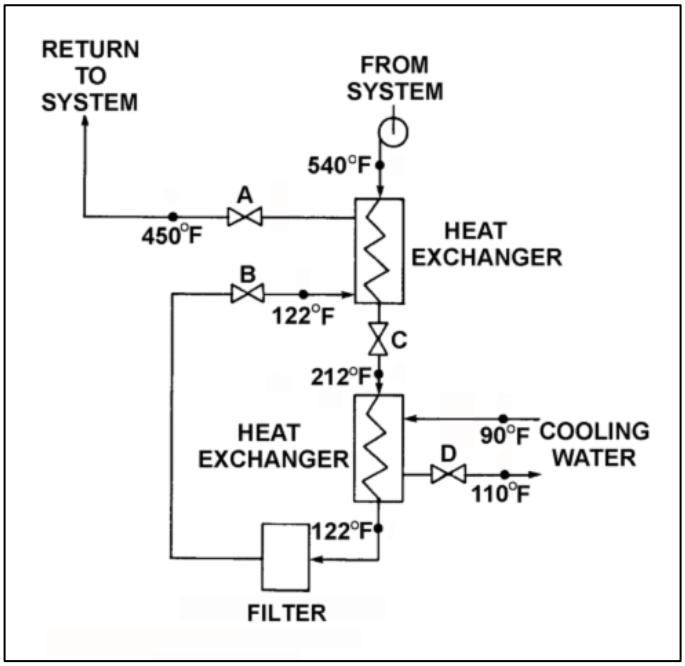

TOPIC: 291006
KNOWLEDGE: K1.07 [2.7/2.8]
QID: B7017 (P7016)

Given the following parameter values for a feedwater heater:

Feedwater inlet temperature = 320°F
Feedwater inlet pressure = 1,000 psia
Feedwater mass flow rate = 1.0×10^6 lbm/hr
Extraction steam pressure = 500 psia

Assume that the extraction steam enters the heater as a dry saturated vapor and leaves the heater as a saturated liquid at 500 psia.

Which one of the following is the approximate mass flow rate of extraction steam required to increase feedwater temperature to 380°F?

A. 5.2×10^4 lbm/hr

B. 7.9×10^4 lbm/hr

C. 8.4×10^4 lbm/hr

D. 8.9×10^4 lbm/hr

ANSWER: C.

TOPIC: 291006
KNOWLEDGE: K1.07 [2.7/2.8]
QID: B7316 (P7316)

Refer to the drawing of an operating parallel-flow lube oil heat exchanger (see figure below).

Unlike a counter-flow heat exchanger, in the parallel-flow heat exchanger the _____ temperature will always be greater than the _____ temperature.

A. CW outlet; LO inlet

B. CW outlet; LO outlet

C. LO outlet; CW inlet

D. LO outlet; CW outlet

ANSWER: D.

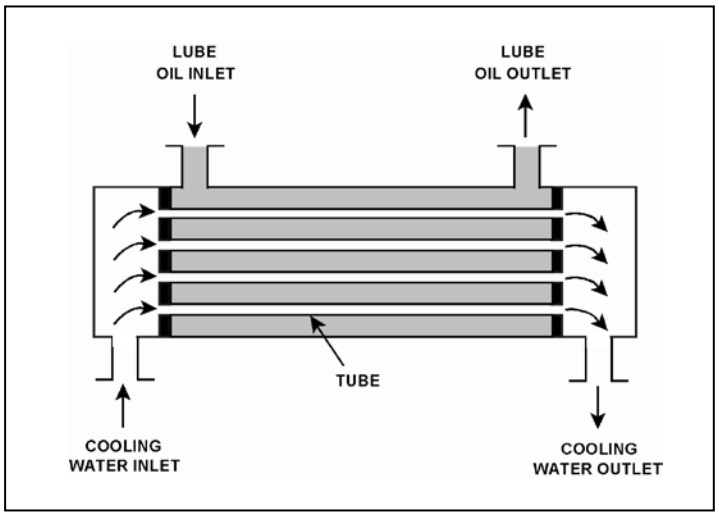

TOPIC: 291006
KNOWLEDGE: K1.08 [2.9/3.0]
QID: B331 (P534)

Refer to the drawing of an operating lube oil heat exchanger (see figure below).

Increasing the oil flow rate through the heat exchanger will cause the oil outlet temperature to _____ and the cooling water outlet temperature to _____.

A. increase; increase

B. increase; decrease

C. decrease; increase

D. decrease; decrease

ANSWER: A.

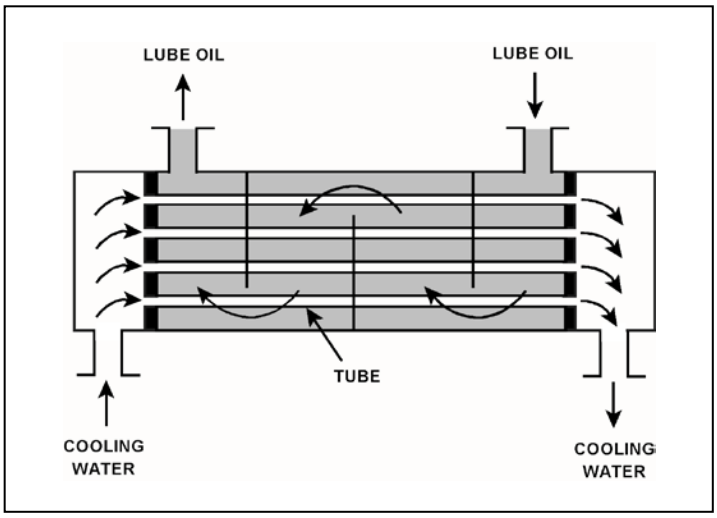

TOPIC: 291006
KNOWLEDGE: K1.08 [2.9/3.0]
QID: B431 (P632)

Refer to the drawing of an operating lube oil heat exchanger (see figure below).

Assume that the inlet lube oil and inlet cooling water temperatures are constant and cooling water flow rate remains the same. Decreasing the oil flow rate through the heat exchanger will cause the lube oil outlet temperature to _____ and the cooling water outlet temperature to _____.

A. increase, increase

B. increase, decrease

C. decrease, increase

D. decrease, decrease

ANSWER: D.

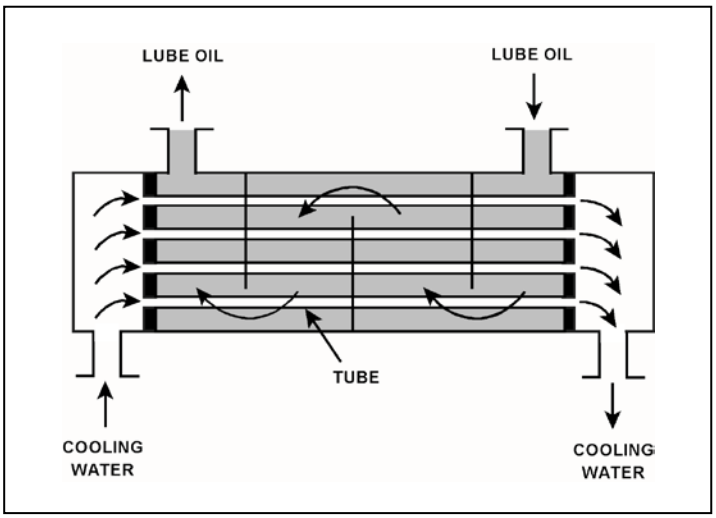

TOPIC: 291006
KNOWLEDGE: K1.08 [2.9/3.0]
QID: B834

Refer to the drawing of an operating lube oil heat exchanger (see figure below).

Given the following information:

$c_{p\text{-oil}}$ = 1.1 Btu/lbm-°F
$c_{p\text{-water}}$ = 1.0 Btu/lbm-°F
$\dot{m}_{oil}$ = 1.8 x 10^4 lbm/hr
$\dot{m}_{water}$ = 1.65 x 10^4 lbm/hr
$T_{oil\ in}$ = 170°F
$T_{oil\ out}$ = 120°F
$T_{water\ out}$ = 110°F
$T_{water\ in}$ = ?

Which one of the following is the cooling water inlet temperature ($T_{water\ in}$) for the heat exchanger?

A. 45°F

B. 50°F

C. 55°F

D. 60°F

ANSWER: B.

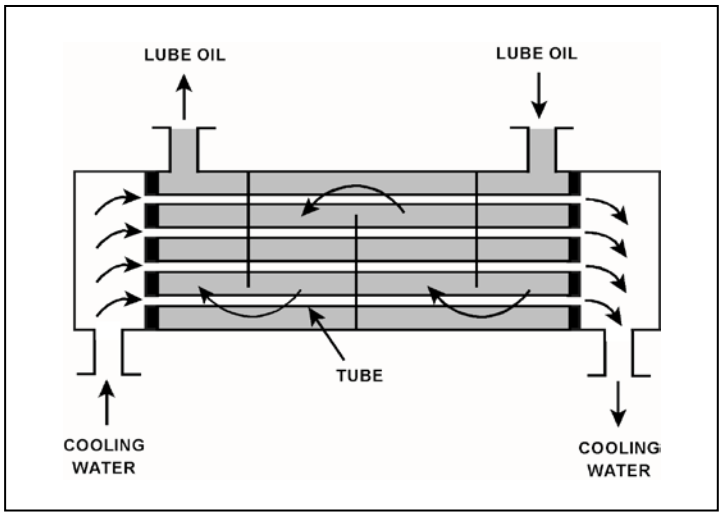

TOPIC: 291006
KNOWLEDGE: K1.08 [2.9/3.0]
QID: B934 (P3132)

Refer to the drawing of an operating lube oil heat exchanger (see figure below).

Given the following information:

$\dot{Q}_{oil}$ = 1.0 x 10^7 Btu/hr
$T_{oil\ in}$ = 170°F
$T_{oil\ out}$ = 134°F
$T_{water\ in}$ = 85°F
$T_{water\ out}$ = 112°F
$c_{p\text{-}oil}$ = 1.1 Btu/lbm-°F
$c_{p\text{-}water}$ = 1.0 Btu/lbm-°F
$\dot{m}_{water}$ = ?

Which one of the following is the approximate mass flow rate of the cooling water?

A. 4.5 x 10^5 lbm/hr

B. 3.7 x 10^5 lbm/hr

C. 2.5 x 10^5 lbm/hr

D. 1.2 x 10^5 lbm/hr

ANSWER: B.

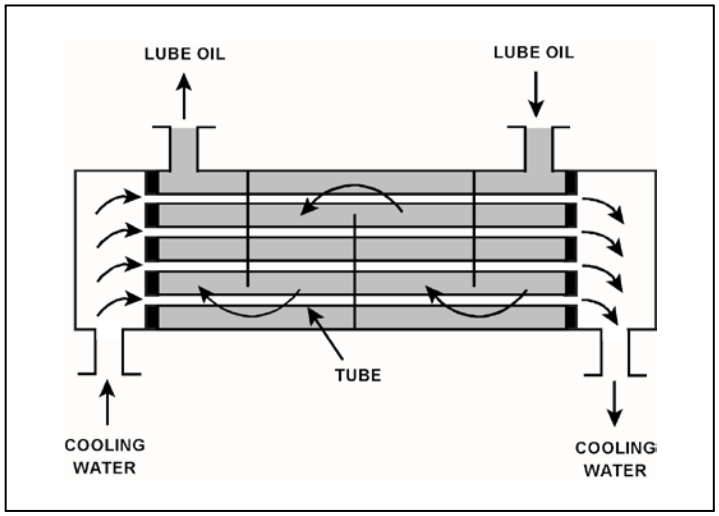

TOPIC: 291006
KNOWLEDGE: K1.08 [2.9/3.0]
QID: B1033

Refer to the drawing of an operating lube oil heat exchanger (see figure below).

Given the following information:

$c_{p\text{-oil}}$ = 1.1 Btu/lbm-°F
$c_{p\text{-water}}$ = 1.0 Btu/lbm-°F
$\dot{m}_{oil}$ = 1.8 x 10^4 lbm/hr
$\dot{m}_{water}$ = 1.65 x 10^4 lbm/hr
$T_{oil\ in}$ = 115°F
$T_{oil\ out}$ = 90°F
$T_{water\ out}$ = 110°F
$T_{water\ in}$ = ?

Which one of the following is the approximate cooling water inlet temperature ($T_{water\ in}$) for the heat exchanger?

A. 50°F

B. 60°F

C. 75°F

D. 80°F

ANSWER: D.

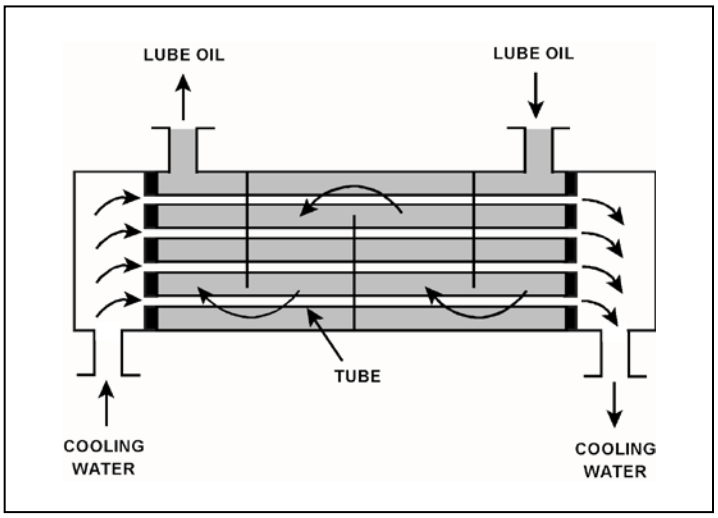

TOPIC: 291006
KNOWLEDGE: K1.08 [2.9/3.0]
QID: B1331 (P3432)

Refer to the drawing of an operating lube oil heat exchanger (see figure below).

Given the following information:

$\dot{m}_{oil}$ = 1.8 x 10^4 lbm/hr
$\dot{m}_{water}$ = 3.3 x 10^4 lbm/hr
$c_{p\text{-}oil}$ = 1.1 Btu/lbm-°F
$c_{p\text{-}water}$ = 1.0 Btu/lbm-°F
$T_{cw\text{-}in}$ = 90°F
$T_{cw\text{-}out}$ = 120°F
$T_{oil\text{-}in}$ = 170°F
$T_{oil\text{-}out}$ = ?

Which one of the following is the approximate temperature of the lube oil exiting the heat exchanger ($T_{oil\text{-}out}$)?

A. 110°F

B. 120°F

C. 130°F

D. 140°F

ANSWER: B.

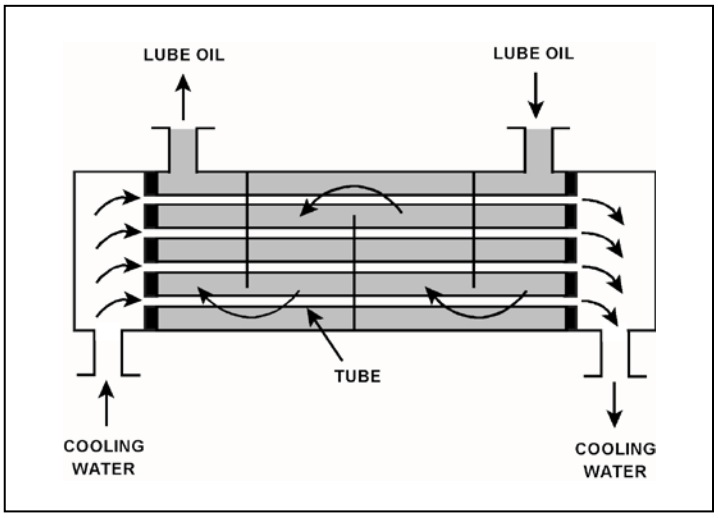

TOPIC: 291006
KNOWLEDGE: K1.08 [2.9/3.0]
QID: B1631 (P1634)

Refer to the drawing of an operating lube oil heat exchanger (see figure below).

Given the following information:

$\dot{m}_{oil}$ = 2.0 x 10^4 lbm/hr
$\dot{m}_{water}$ = 3.0 x 10^4 lbm/hr
$c_{p\text{-}oil}$ = 1.1 Btu/lbm-°F
$c_{p\text{-}water}$ = 1.0 Btu/lbm-°F
$T_{cw\text{-}in}$ = 92°F
$T_{cw\text{-}out}$ = 125°F
$T_{oil\text{-}in}$ = 180°F
$T_{oil\text{-}out}$ = ?

Which one of the following is the approximate temperature of the lube oil exiting the heat exchanger ($T_{oil\text{-}out}$)?

A. 126°F

B. 135°F

C. 147°F

D. 150°F

ANSWER: B.

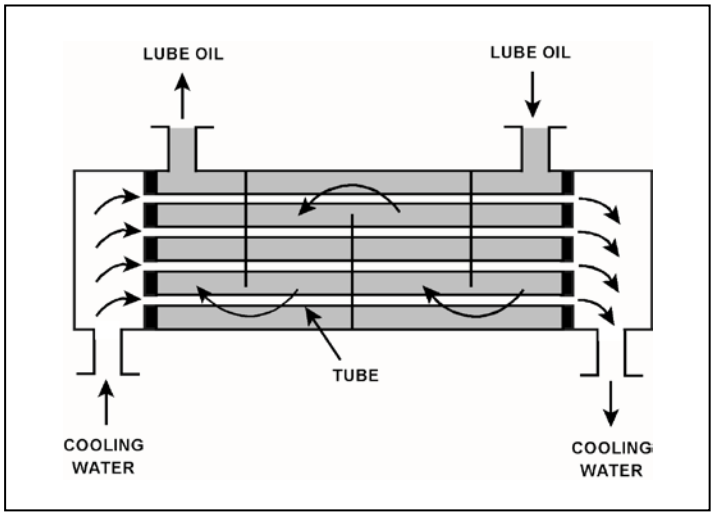

TOPIC: 291006
KNOWLEDGE: K1.08 [2.9/3.0]
QID: B1933 (P1934)

Refer to the drawing of an operating lube oil heat exchanger (see figure below).

Given the following information:

$\dot{m}_{oil}$ = 1.5 x 10^4 lbm/hr
$\dot{m}_{water}$ = 2.5 x 10^4 lbm/hr
$c_{p\text{-}oil}$ = 1.1 Btu/lbm-°F
$c_{p\text{-}water}$ = 1.0 Btu/lbm-°F
$T_{cw\text{-}in}$ = 92°F
$T_{cw\text{-}out}$ = 125°F
$T_{oil\text{-}in}$ = 160°F
$T_{oil\text{-}out}$ = ?

Which one of the following is the approximate temperature of the lube oil exiting the heat exchanger ($T_{oil\text{-}out}$)?

A. 110°F

B. 127°F

C. 135°F

D. 147°F

ANSWER: A.

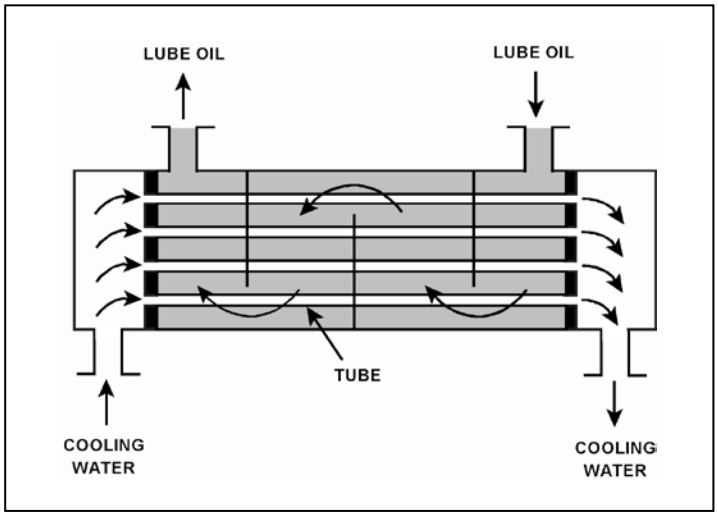

TOPIC: 291006
KNOWLEDGE: K1.08 [2.9/3.0]
QID: B2132 (P2133)

Refer to the drawing of a lube oil heat exchanger (see figure below).

The lube oil heat exchanger is in service with the following inlet temperatures:

Lube oil inlet temperature = 120°F
Cooling water inlet temperature = 60°F

Assuming that cooling water flow rate is greater than lube oil flow rate, which one of the following pairs of heat exchanger outlet temperatures is possible? (Assume both fluids have the same specific heat.)

	Lube Oil Outlet Temp	Cooling Water Outlet Temp
A.	100°F	100°F
B.	90°F	90°F
C.	80°F	80°F
D.	80°F	100°F

ANSWER: C.

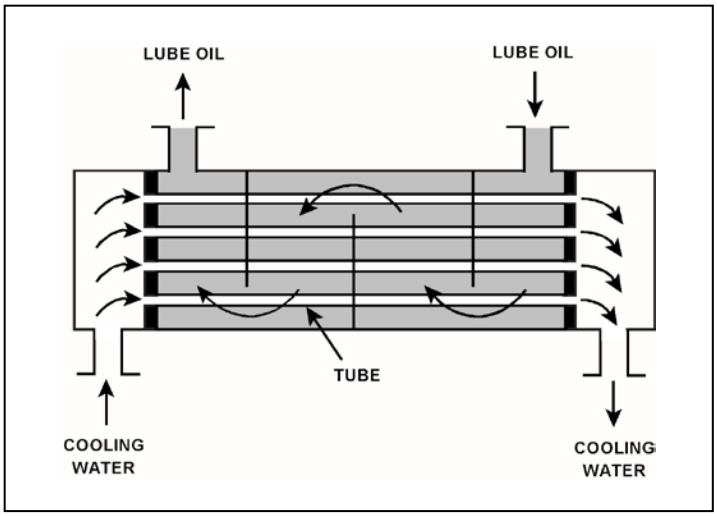

TOPIC: 291006
KNOWLEDGE: K1.08 [2.9/3.0]
QID: B2233 (P2434)

Refer to the drawing of a lube oil heat exchanger (see figure below).

The lube oil heat exchanger is in service with the following inlet temperatures:

Lube oil inlet temperature = 130°F
Cooling water inlet temperature = 70°F

Assuming that cooling water flow rate is greater than lube oil flow rate, which one of the following pairs of heat exchanger outlet temperatures is possible? (Assume both fluids have the same specific heat.)

	Lube Oil Outlet Temp	Cooling Water Outlet Temp
A.	90°F	100°F
B.	90°F	110°F
C.	100°F	100°F
D.	100°F	110°F

ANSWER: A.

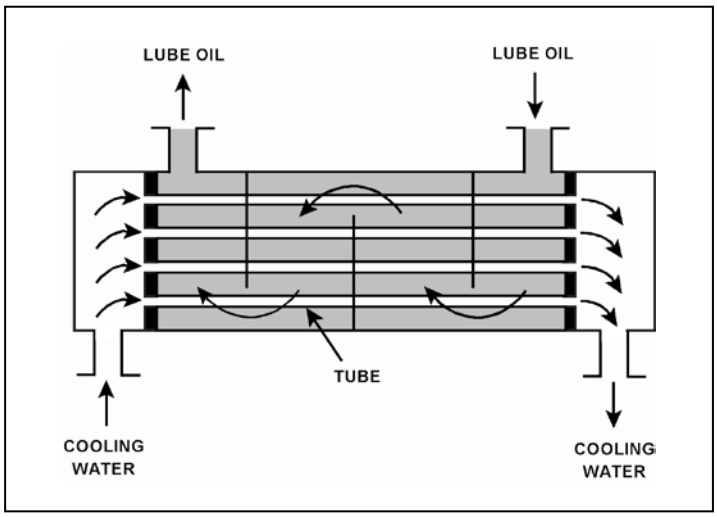

TOPIC: 291006
KNOWLEDGE: K1.08 [2.9/3.0]
QID: B2534 (P2532)

Refer to the drawing of an operating lube oil heat exchanger (see figure below).

Given the following information:

$\dot{m}_{oil}$ = 1.5 x 10^4 lbm/hr
$\dot{m}_{water}$ = 2.5 x 10^4 lbm/hr
$c_{p\text{-}oil}$ = 1.1 Btu/lbm-°F
$c_{p\text{-}water}$ = 1.0 Btu/lbm-°F
$T_{oil\text{-}in}$ = 160°F
$T_{oil\text{-}out}$ = 110°F
$T_{cw\text{-}in}$ = 92°F
$T_{cw\text{-}out}$ = ?

Which one of the following is the approximate temperature of the cooling water exiting the heat exchanger ($T_{cw\text{-}out}$)?

A. 110°F

B. 115°F

C. 120°F

D. 125°F

ANSWER: D.

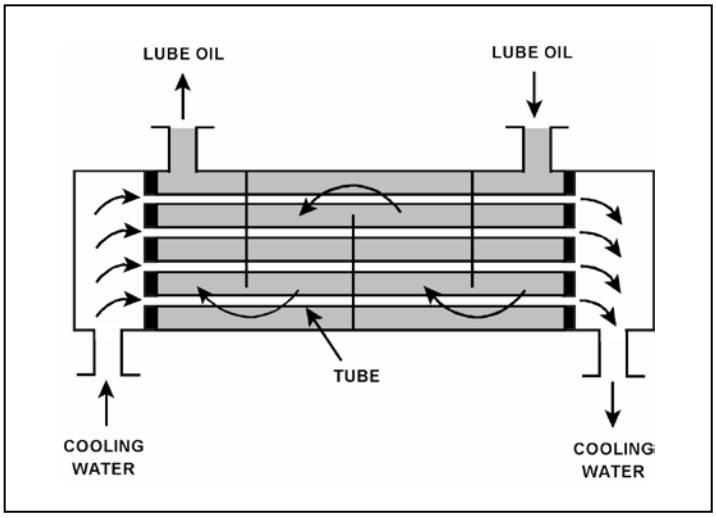

TOPIC: 291006
KNOWLEDGE: K1.08 [2.9/3.0]
QID: B2632 (P2633)

Refer to the drawing of a lube oil heat exchanger (see figure below).

The lube oil heat exchanger is in service with the following inlet temperatures:

Lube oil inlet temperature = 110°F
Cooling water inlet temperature = 75°F

Assuming that cooling water flow rate is greater than lube oil flow rate, which one of the following pairs of heat exchanger outlet temperatures is possible? (Assume both fluids have the specific heat.)

	Lube Oil Outlet Temp	Cooling Water Outlet Temp
A.	100°F	100°F
B.	100°F	90°F
C.	90°F	100°F
D.	90°F	90°F

ANSWER: D.

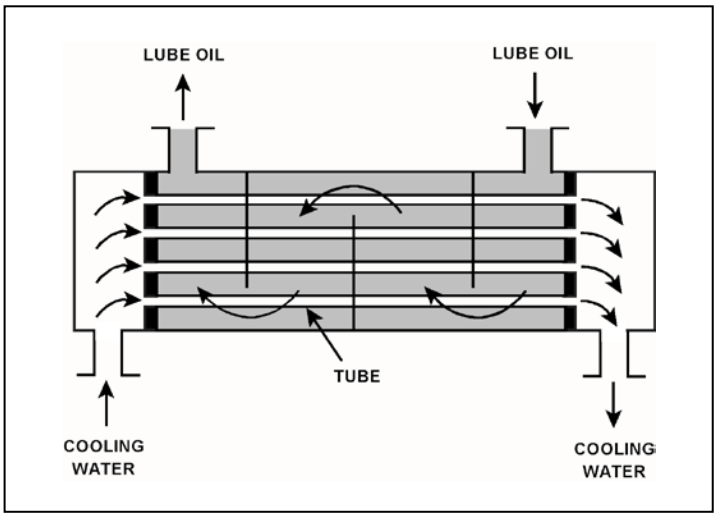

TOPIC: 291006
KNOWLEDGE: K1.08 [2.9/3.0]
QID: B2733 (P2733)

Refer to the drawing of a lube oil heat exchanger (see figure below).

The lube oil heat exchanger is in service with the following inlet temperatures:

Lube oil inlet temperature = 130°F
Cooling water inlet temperature = 70°F

Assuming that cooling water flow rate is greater than lube oil flow rate, which one of the following pairs of heat exchanger outlet temperatures is not possible? (Assume both fluids have the same specific heat.)

	Lube Oil Outlet Temp	Cooling Water Outlet Temp
A.	90°F	86°F
B.	100°F	85°F
C.	110°F	84°F
D.	120°F	83°F

ANSWER: D.

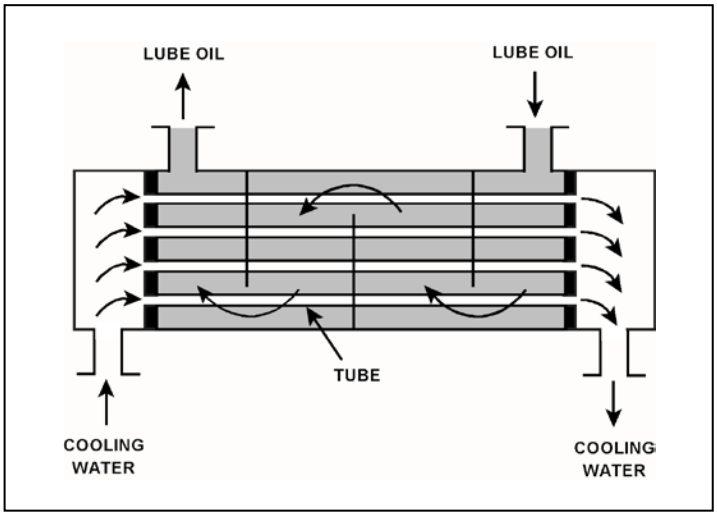

TOPIC: 291006
KNOWLEDGE: K1.08 [2.9/3.0]
QID: B2832 (P4517)

Refer to the drawing of an operating lube oil heat exchanger (see figure below).

Given the following initial parameters:

Cooling water inlet temperature ($T_{cw\text{-}in}$) = 75°F
Cooling water outlet temperature ($T_{cw\text{-}out}$) = 105°F
Oil inlet temperature ($T_{oil\text{-}in}$) = 140°F
Oil outlet temperature ($T_{oil\text{-}out}$) = 100°F

Air introduction to the heat exchanger results in some of the heat exchanger tubes becoming uncovered. As a result, $T_{cw\text{-}out}$ decreases to 99°F. Assume that the mass flow rate and specific heat of both fluids remain the same, and that Toil-in does not change. Which one of the following will be the approximate temperature of the lube oil exiting the heat exchanger ($T_{oil\text{-}out}$)?

A. 99°F

B. 108°F

C. 116°F

D. 122°F

ANSWER: B.

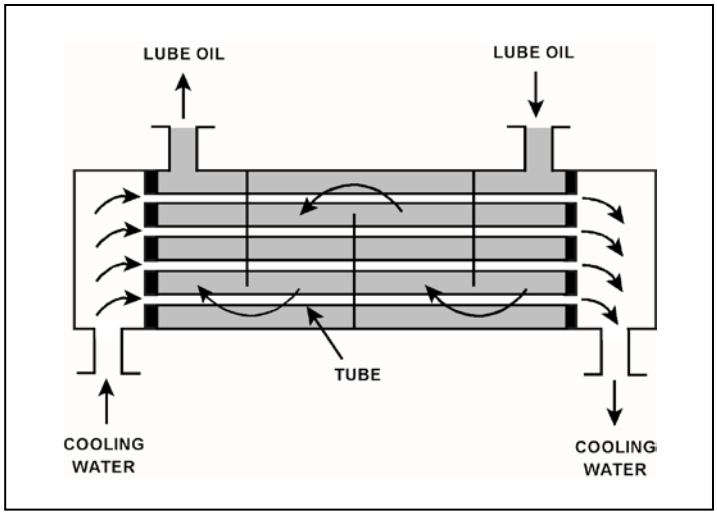

TOPIC: 291006
KNOWLEDGE: K1.08 [2.9/3.0]
QID: B2933 (P2934)

Refer to the drawing of a lube oil heat exchanger (see figure below).

The lube oil heat exchanger is in service with the following inlet temperatures:

Lube oil inlet temperature = 130°F
Cooling water inlet temperature = 70°F

Assuming the cooling water flow rate exceeds the lube oil flow rate, which one of the following pairs of heat exchanger outlet temperatures is possible? (Assume both fluids have the same specific heat.)

	Lube Oil Outlet Temp	Cooling Water Outlet Temp
A.	100°F	90°F
B.	100°F	100°F
C.	110°F	90°F
D.	110°F	100°F

ANSWER: A.

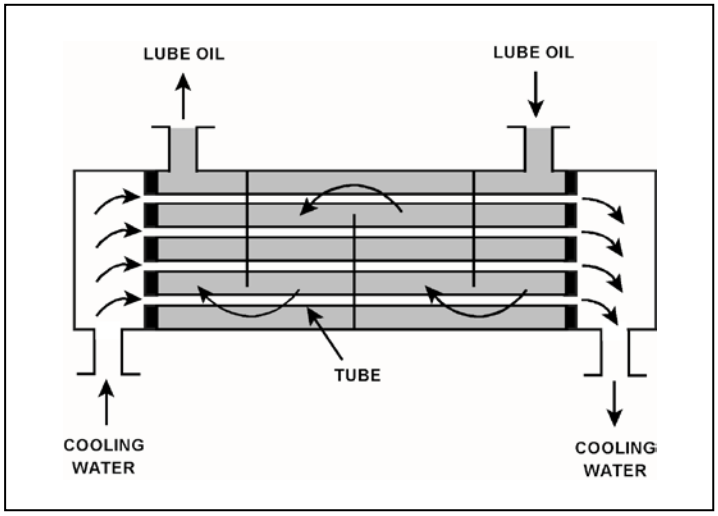

TOPIC: 291006
KNOWLEDGE: K1.08 [2.9/3.0]
QID: B3032 (P3081)

The volumetric flow rate of cooling water entering a heat exchanger is 500 gpm.

Given the following:

- Cooling water pressure entering and leaving the heat exchanger is 10 psig.
- Cooling water inlet temperature is 90°F.
- Cooling water outlet temperature is 160°F.
- Heat exchanger inlet and outlet piping have the same diameter.

What is the approximate volumetric flow rate of the cooling water exiting the heat exchanger?

A. 496 gpm

B. 500 gpm

C. 504 gpm

D. 509 gpm

ANSWER: D.

TOPIC: 291006
KNOWLEDGE: K1.08 [2.9/3.0]
QID: B3431

Refer to the drawing of an operating lube oil heat exchanger (see figure below).

Given the following information:

$c_{p\text{-oil}}$ = 1.1 Btu/lbm-°F
$c_{p\text{-water}}$ = 1.0 Btu/lbm-°F
$T_{oil\ in}$ = 174°F
$T_{oil\text{-out}}$ = 114°F
$T_{water\text{-in}}$ = 85°F
$T_{water\text{-out}}$ = 121°F
$\dot{m}_{oil}$ = 4.0×10^4 lbm/hr
$\dot{m}_{water}$ = ?

What is the approximate mass flow rate of the cooling water?

A. 8.0×10^4 lbm/hr

B. 7.3×10^4 lbm/hr

C. 2.6×10^4 lbm/hr

D. 2.2×10^4 lbm/hr

ANSWER: B.

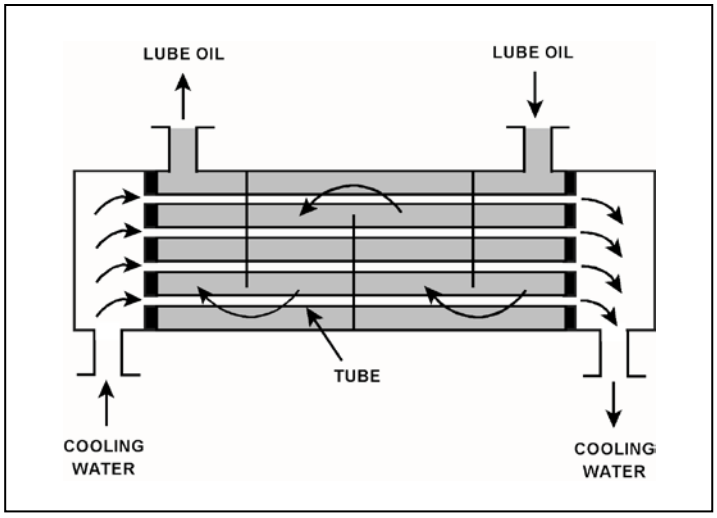

TOPIC: 291006
KNOWLEDGE: K1.08 [2.9/3.0]
QID: B3732 (P3732)

Refer to the drawing of a lube oil heat exchanger (see figure below).

The lube oil heat exchanger is in service with the following inlet temperatures:

Lube oil inlet temperature = 130°F
Cooling water inlet temperature = 70°F

Assume that cooling water mass flow rate is less than lube oil mass flow rate, and that both fluids have the same specific heat. Which one of the following pairs of heat exchanger outlet temperatures is <u>not</u> possible?

	Lube Oil Outlet Temp	Cooling Water Outlet Temp
A.	100°F	105°F
B.	105°F	105°F
C.	110°F	90°F
D.	115°F	90°F

ANSWER: C.

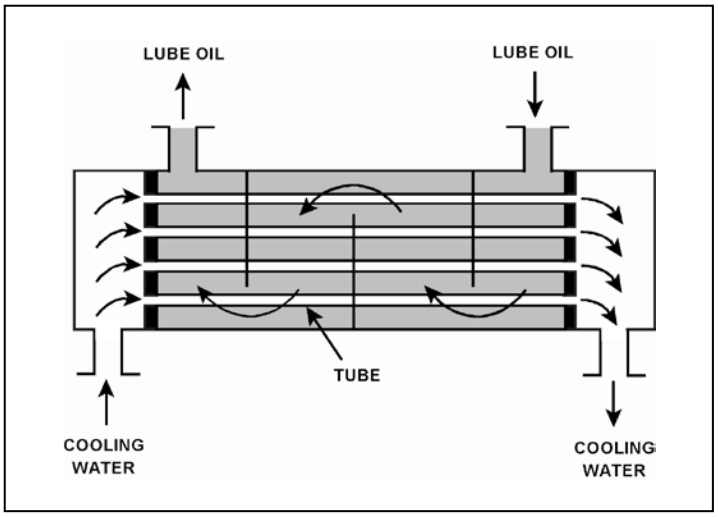

TOPIC: 291006
KNOWLEDGE: K1.08 [2.9/3.0]
QID: B3733 (P3783)

A condensate pump is taking suction on a main condenser hotwell, containing water at 100°F, and discharging the water at a volumetric flow rate of 100,000 gpm to the main feedwater system. The main feedwater system heats the water to 400°F before it enters the reactor vessel. Assume there is no leakage, and no bypass or recirculation flow paths are in use.

What is the approximate volumetric flow rate of the feedwater entering the reactor vessel?

A. 100,000 gpm

B. 105,000 gpm

C. 109,000 gpm

D. 115,000 gpm

ANSWER: D.

TOPIC: 291006
KNOWLEDGE: K1.08 [2.9/3.0]
QID: B4416 (P4416)

Refer to the drawing of a lube oil heat exchanger (see figure below).

The lube oil heat exchanger is in service with the following inlet temperatures:

Lube oil inlet temperature = 120°F
Cooling water inlet temperature = 60°F

Assuming that cooling water flow rate is greater than lube oil flow rate, which one of the following pairs of heat exchanger outlet temperatures is possible? (Assume both fluids have the same specific heat.)

	Lube Oil Outlet Temp	Cooling Water Outlet Temp
A.	90°F	100°F
B.	90°F	85°F
C.	95°F	100°F
D.	95°F	85°F

ANSWER: B.

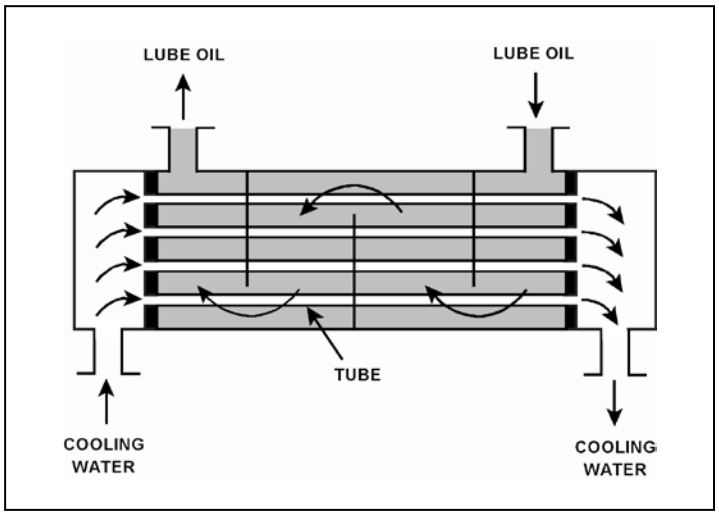

TOPIC: 291006
KNOWLEDGE: K1.08 [2.9/3.0]
QID: B5517 (P5516)

Refer to the drawing of a lube oil heat exchanger (see figure below).

The lube oil heat exchanger is in service with the following inlet temperatures:

Lube oil inlet temperature = 130°F
Cooling water inlet temperature = 70°F

Given that cooling water mass flow rate is greater than lube oil mass flow rate, which one of the following pairs of heat exchanger outlet temperatures is <u>not</u> possible? (Assume both fluids have the same specific heat.)

	Lube Oil Outlet Temp	Cooling Water Outlet Temp
A.	90°F	105°F
B.	90°F	100°F
C.	110°F	95°F
D.	110°F	85°F

ANSWER: C.

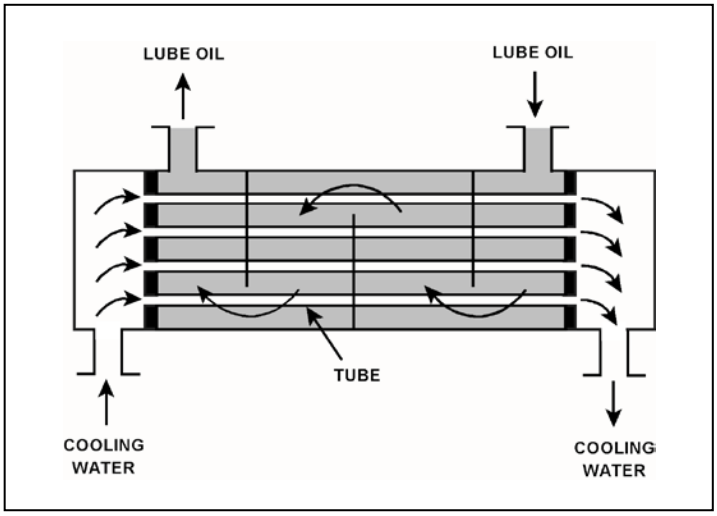

TOPIC: 291006
KNOWLEDGE: K1.08 [2.9/3.0]
QID: B5617 (P5616)

Refer to the drawing of an operating lube oil heat exchanger (see figure below).

Assume that the inlet lube oil and inlet cooling water temperatures are constant and the lube oil flow rate remains the same. If the cooling water flow rate increases, the lube oil outlet temperature will _____; and the cooling water outlet temperature will _____.

A. increase; increase

B. increase; decrease

C. decrease; increase

D. decrease; decrease

ANSWER: D.

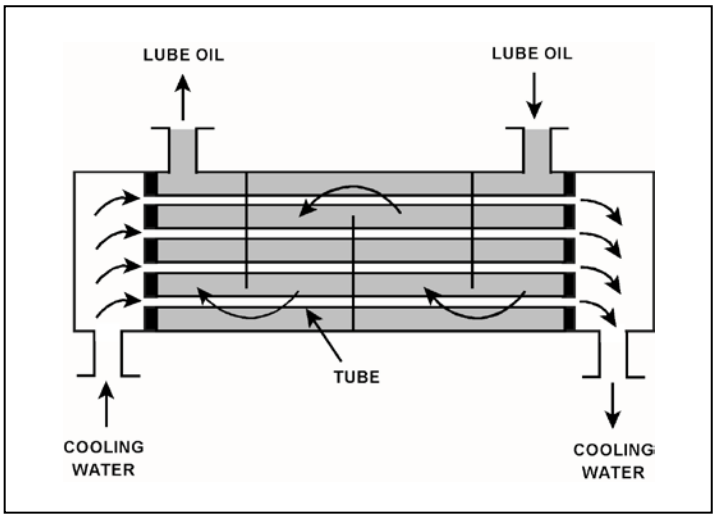

TOPIC: 291006
KNOWLEDGE: K1.08 [2.9/3.0]
QID: B6516 (P6516)

Refer to the drawing of a heat exchanger (see figure below).

The heat exchanger is in service with the following inlet temperatures:

Service water inlet temperature = 130°F
Cooling water inlet temperature = 70°F

Assume that both fluids have the same specific heat, and that service water mass flow rate is greater than cooling water mass flow rate. Which one of the following pairs of heat exchanger outlet temperatures is possible?

	Service Water Outlet Temp.	Cooling Water Outlet Temp.
A.	120°F	82°F
B.	110°F	90°F
C.	100°F	98°F
D.	90°F	106°F

ANSWER: A.

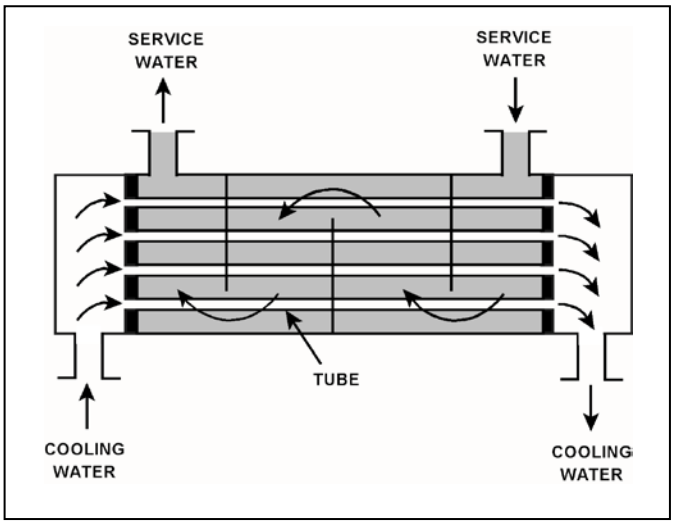

TOPIC: 291006
KNOWLEDGE: K1.09 [2.7/2.8]
QID: B232

A reactor is shut down with a reactor coolant temperature of 400°F and all control rods fully inserted. What is the major adverse consequence resulting from rapidly reducing the reactor coolant temperature to 250°F?

A. Excessive stress in the ceramic fuel pellets.

B. Excessive stress in the reactor vessel wall.

C. Uncontrolled reactor criticality.

D. Loss of core inlet subcooling.

ANSWER: B.

TOPIC: 291006
KNOWLEDGE: K1.09 [2.7/2.8]
QID: B633 (P2832)

Steam has been admitted to a main condenser for 25 minutes with no cooling water flow. Initiating full cooling water flow rate at this time will...

A. reduce the stress on the condenser shell by rapidly cooling the shell.

B. reduce the stress on the condenser tubes by rapidly cooling the tubes.

C. induce large thermal stresses on the condenser shell.

D. induce large thermal stresses on the junctions between the condenser tubes and the tubesheet.

ANSWER: D.

TOPIC: 291006
KNOWLEDGE: K1.10 [2.8/2.8]
QID: B32

A nuclear power plant is operating at full power with 2°F of condensate subcooling. Which one of the following changes will decrease subcooling of the condensate entering the main condenser hotwell? (Assume condensate temperature does not change.)

A. Decreased circulating water flow rate

B. Increased gas buildup in the main condenser

C. Decreased main condenser hotwell level

D. Decreased main turbine steam flow

ANSWER: D.

TOPIC: 291006
KNOWLEDGE: K1.10 [2.8/2.8]
QID: B111 (P1834)

During normal nuclear power plant operation, a main condenser develops an air leak which decreases vacuum at a rate of 1.0 inch Hg/min. Which one of the following will increase because of this condition? (Assume that main turbine steam inlet valve position does not change.)

A. Steam cycle efficiency.

B. Main turbine work output.

C. Condenser hotwell temperature.

D. Low pressure turbine exhaust steam moisture content.

ANSWER: C.

TOPIC: 291006
KNOWLEDGE: K1.10 [2.8/2.8]
QID: B733

Which one of the following changes will result in <u>increased</u> subcooling of the condensate water in the main condenser hotwell?

A. Decreased circulating water flow

B. Increased circulating water temperature

C. Decreased main turbine-generator MW load

D. Isolating one bay of the condenser circulating water system

ANSWER: C.

TOPIC: 291006
KNOWLEDGE: K1.10 [2.8/2.8]
QID: B1232

Assuming that condenser cooling water inlet temperature and flow rate do <u>not</u> change, if condenser vacuum improves, condensate temperature will...

A. increase, because condensate subcooling has decreased.

B. increase, because condenser saturation pressure has increased.

C. decrease, because condensate subcooling has increased.

D. decrease, because condenser saturation pressure has decreased.

ANSWER: D.

TOPIC: 291006
KNOWLEDGE: K1.10 [2.8/2.8]
QID: B2133

During normal plant operation at 100 percent power, a main condenser develops an air leak that degrades vacuum at a rate of 1 inch Hg/min. Assuming the plant continues to operate at 100 percent power, condenser hotwell temperature will...

A. increase, because condensation of turbine exhaust steam is occurring at a higher temperature.

B. increase, because more work is being extracted from the steam by the turbine.

C. decrease, because condensation of turbine exhaust steam is occurring at a lower temperature.

D. decrease, because less work is being extracted from the steam by the turbine.

ANSWER: A.

TOPIC: 291006
KNOWLEDGE: K1.10 [2.8/2.8]
QID: B2633 (P2634)

A nuclear power plant is operating at steady-state 100 percent power. Assuming that condenser cooling water inlet temperature and flow rate do <u>not</u> change, if main condenser vacuum <u>decreases</u>, condensate temperature will...

A. increase, because condensate subcooling has decreased.

B. increase, because condenser saturation pressure has increased.

C. decrease, because condensate subcooling has increased.

D. decrease, because condenser saturation pressure has decreased.

ANSWER: B.

TOPIC: 291006
KNOWLEDGE: K1.10 [2.8/2.8]
QID: B2736 (P3534)

A nuclear power plant is operating at steady-state 100 percent power when air inleakage causes main condenser vacuum to decrease from 28 inches Hg to 27 inches Hg. Assume the steam inlet quality and mass flow rate of steam through the main turbine remain unchanged, and that condenser cooling water inlet temperature and flow rate do not change.

When the plant stabilizes, turbine exhaust quality will be _____; and turbine exhaust temperature will be _____.

A. higher; higher

B. higher; lower

C. lower; higher

D. lower; lower

ANSWER: A.

TOPIC: 291006
KNOWLEDGE: K1.11 [2.8/2.8]
QID: B374

A pressure gauge on a condenser reads 27 inches of mercury (Hg) vacuum. What is the absolute pressure corresponding to this vacuum?

A. 1.0 psia

B. 1.5 psia

C. 13.5 psia

D. 14.0 psia

ANSWER: B.

TOPIC: 291006
KNOWLEDGE: K1.11 [2.8/2.8]
QID: B434

A steam-driven turbine exhausts to a condenser. If condenser vacuum increases, the turbine backpressure will _____, and the turbine power output will _____.

A. increase; increase

B. increase; decrease

C. decrease; increase

D. decrease; decrease

ANSWER: C.

TOPIC: 291006
KNOWLEDGE: K1.11 [2.8/2.8]
QID: B835

A pressure gauge on a main condenser reads 2 psiv. What is the approximate absolute pressure in the main condenser?

A. 2 psia

B. 13 psia

C. 15 psia

D. 17 psia

ANSWER: B.

TOPIC: 291006
KNOWLEDGE: K1.11 [2.8/2.8]
QID: B1035

A main condenser absolute pressure of 4 inches Hg is equivalent to...

A. 11 inches Hg vacuum.

B. 13 inches Hg vacuum.

C. 26 inches Hg vacuum.

D. 28 inches Hg vacuum.

ANSWER: C.

TOPIC: 291006
KNOWLEDGE: K1.11 [2.8/2.8]
QID: B1633

Which one of the following is the approximate main condenser vacuum when main condenser pressure is 7 inches Hg absolute?

A. 0 inches Hg vacuum

B. 7 inches Hg vacuum

C. 23 inches Hg vacuum

D. 30 inches Hg vacuum

ANSWER: C.

TOPIC: 291006
KNOWLEDGE: K1.11 [2.8/2.8]
QID: B2131

Which one of the following is the approximate main condenser vacuum (inches Hg vacuum) when main condenser pressure is 16 inches Hg absolute?

A. 4 inches Hg vacuum

B. 8 inches Hg vacuum

C. 12 inches Hg vacuum

D. 14 inches Hg vacuum

ANSWER: D.

TOPIC: 291006
KNOWLEDGE: K1.12 [2.9/3.0]
QID: B1133

A reactor is shut down at 400 psia when all forced core coolant flow is lost. Which one of the following will enhance natural circulation inside the reactor vessel (RV)?

A. Decrease RV pressure to 300 psia.

B. Increase RV pressure to 500 psia.

C. Decrease RV water level to just above the top of the core.

D. Increase RV water level to just above the steam separators.

ANSWER: D.

TOPIC: 291006
KNOWLEDGE: K1.13 [2.7/2.9]
QID: B34

What is the saturation temperature for a boiling water reactor operating at 920 psig?

A. 532.6°F

B. 533.9°F

C. 536.5°F

D. 538.4°F

ANSWER: C.

TOPIC: 291006
KNOWLEDGE: K1.13 [2.7/2.9]
QID: B534

Which one of the following is the state of water at 20 psia and 250°F?

A. Subcooled liquid

B. Saturated liquid

C. Mixture of saturated liquid and vapor

D. Superheated vapor

ANSWER: D.

TOPIC: 291006
KNOWLEDGE: K1.13 [2.7/2.9]
QID: B1335

Which one of the following describes the state of water at 35 psia and 240°F?

A. Subcooled liquid

B. Saturated liquid

C. Mixture of saturated liquid and vapor

D. Superheated vapor

ANSWER: A.

TOPIC: 291006
KNOWLEDGE: K1.13 [2.7/2.9]
QID: B1433

Which one of the following is the state of water at 120 psig and 340°F?

A. Subcooled liquid

B. Saturated liquid

C. Mixture of saturated liquid and saturated vapor

D. Superheated vapor

ANSWER: A.

TOPIC: 291006
KNOWLEDGE: K1.13 [2.7/2.9]
QID: B1536

Which one of the following describes the state of water at 160 psig and 366°F?

A. Saturated liquid

B. Subcooled liquid

C. Superheated vapor

D. Mixture of saturated liquid and vapor

ANSWER: B.

TOPIC: 291006
KNOWLEDGE: K1.13 [2.7/2.9]
QID: B2336

Which one of the following describes the state of water at 160 psig and 372°F?

A. Saturated liquid

B. Subcooled liquid

C. Superheated vapor

D. Mixture of saturated liquid and vapor

ANSWER: C.

TOPIC: 291006
KNOWLEDGE: K1.13 [2.7/2.9]
QID: B2834

Which one of the following describes the state of water at 150 psig and 360°F?

A. Saturated liquid

B. Subcooled liquid

C. Superheated vapor

D. Mixture of saturated liquid and vapor

ANSWER: B.

TOPIC: 291006
KNOWLEDGE: K1.14 [3.1/3.2]
QID: B535

What is the reason for ensuring that a piping system is completely filled and vented prior to initiating system flow?

A. To minimize the system head losses

B. To ensure all noncondensible gases are removed from the piping system to reduce system corrosion

C. To preclude a reduction in the overall system heat transfer coefficient

D. To minimize the potential for water hammer

ANSWER: D.

TOPIC: 291006
KNOWLEDGE: K1.14 [3.1/3.2]
QID: B635

The discharge valve for a large operating centrifugal pump should be positioned slowly to minimize the...

A. potential for causing water hammer.

B. change in available net positive suction head.

C. mechanical wear on the valve seat and stem packing.

D. differential pressure stress exerted on the valve disk and stem.

ANSWER: A.

TOPIC: 291006
KNOWLEDGE: K1.14 [3.1/3.2]
QID: B1135

After starting a large motor-driven centrifugal cooling water pump, the pump discharge valve should be opened <u>slowly</u> to minimize the...

A. potential for a water hammer.

B. potential for pump cavitation.

C. motor running current requirements.

D. net positive suction head requirements.

ANSWER: A.

TOPIC: 291006
KNOWLEDGE: K1.15 [2.6/2.8]
QID: B3635 (P3633)

A main turbine-generator is operating at 80 percent load with the following initial steady-state temperatures for the main turbine lube oil heat exchanger:

$T_{oil\ in}$ = 174°F
$T_{oil\ out}$ = 114°F
$T_{water\ in}$ = 85°F
$T_{water\ out}$ = 115°F

After six months of main turbine-generator operation, the following final steady-state lube oil heat exchanger temperatures are observed:

$T_{oil\ in}$ = 179°F
$T_{oil\ out}$ = 119°F
$T_{water\ in}$ = 85°F
$T_{water\ out}$ = 115°F

Assume the final cooling water and lube oil flow rates are the same as the initial flow rates, and the specific heat values for the cooling water and lube oil do not change.

Which one of the following could be responsible for the differences between the initial and final heat exchanger steady-state temperatures?

A. The heat exchanger tubes have become fouled with scale.

B. The temperature of the cooling water source has increased.

C. The final main turbine-generator load is higher than the initial load.

D. The final main turbine-generator load is lower than the initial load.

ANSWER: A.

TOPIC: 291006
KNOWLEDGE: K1.15 [2.6/2.8]
QID: B4616 (P4617)

Refer to the drawing of two system curves for a main condenser cooling water system (see figure below).

Which one of the following will cause the system curve to shift from the solid curve toward the dashed curve?

A. The main condenser tubes are cleaned.

B. The main condenser tubes become increasingly fouled.

C. Cooling water flow rate is increased by 25 percent by starting an additional cooling water pump.

D. Cooling water flow rate is decreased by 25 percent by stopping one of the operating cooling water pumps.

ANSWER: A.

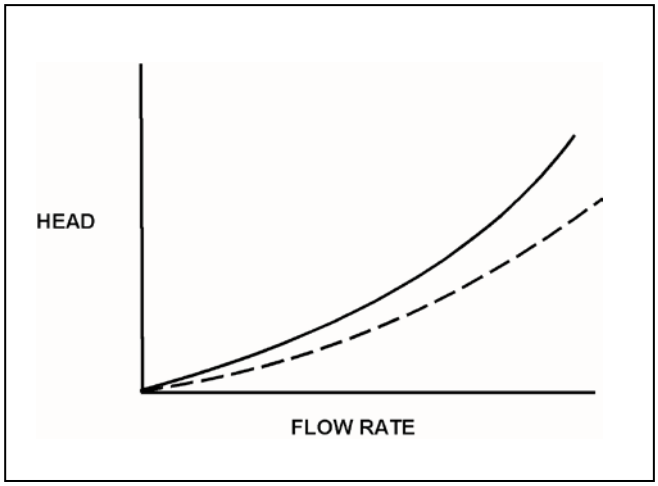

TOPIC: 291006
KNOWLEDGE: K1.15 [2.6/2.8]
QID: B5117 (P5116)

Refer to the drawing of two system curves for a typical main condenser cooling water system (see figure below).

Which one of the following will cause the system curve to shift from the solid curve toward the dashed curve?

A. The main condenser tubes are cleaned.

B. The main condenser tubes become increasingly fouled.

C. Cooling water system flow rate is increased by 25 percent by starting an additional cooling water pump.

D. Cooling water system flow rate is decreased by 25 percent by stopping one of the operating cooling water pumps.

ANSWER: B.

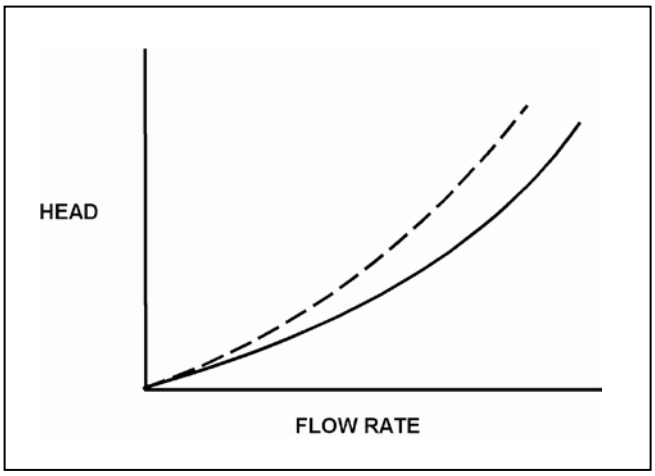

TOPIC: 291006
KNOWLEDGE: K1.16 [2.5/2.6]
QID: B156

The buildup of scale on heat-transfer surfaces in the reactor vessel...

A. results in lower fuel temperature, which decreases the nuclear fuel cycle efficiency.

B. is controlled by complying with core thermal limits and adhering to fuel preconditioning requirements.

C. is controlled by using reactor water cleanup system and condensate system demineralizers.

D. results in higher coolant temperature, which increases overall plant efficiency.

ANSWER: C.

TOPIC: 291006
KNOWLEDGE: K1.16 [2.5/2.6]
QID: B1136

Tube scaling in a parallel flow heat exchanger causes heat transfer rate to decrease because the...

A. surface area of the tubes decreases.

B. cooling fluid outlet temperature decreases.

C. thermal conductivity of the scale is very low.

D. flow through the heat exchanger becomes more turbulent.

ANSWER: C.

TOPIC: 291006
KNOWLEDGE: K1.16 [2.5/2.6]
QID: B1234 (P32)

Refer to the drawing of an operating lube oil heat exchanger (see figure below).

If scaling occurs inside the cooling water tubes, cooling water outlet temperature will _____; and lube oil outlet temperature will _____. (Assume the lube oil and cooling water flow rates do not change.)

A. decrease; decrease

B. decrease; increase

C. increase; decrease

D. increase; increase

ANSWER: B.

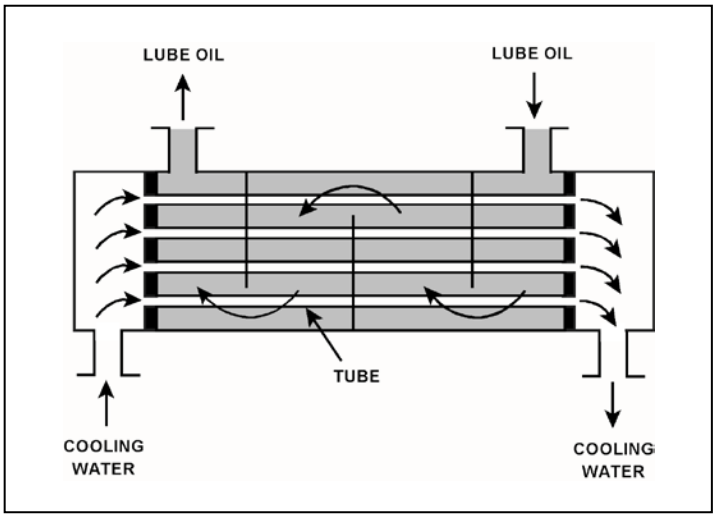

TOPIC: 291006
KNOWLEDGE: K1.16 [2.5/2.6]
QID: B1833 (P2233)

Refer to the drawing of an operating lube oil heat exchanger (see figure below).

If deposits accumulate on the outside of the cooling water tubes, cooling water outlet temperature will _____; and lube oil outlet temperature will _____. (Assume the lube oil and cooling water inlet temperatures and flow rates do not change.)

A. increase; decrease

B. increase; increase

C. decrease; decrease

D. decrease; increase

ANSWER: D.

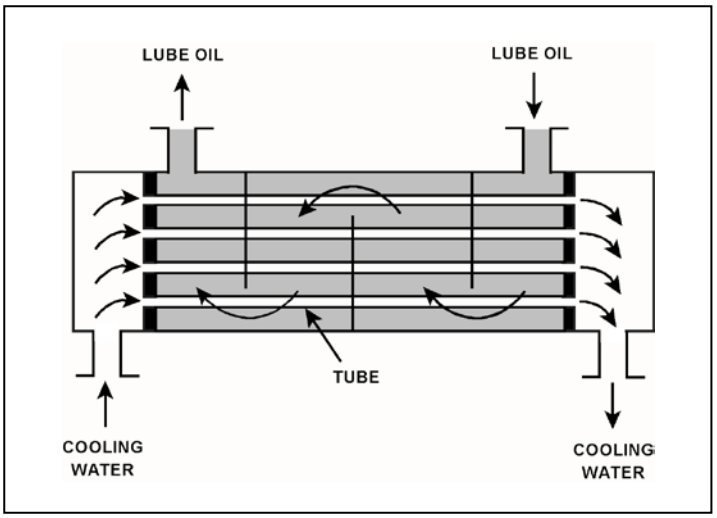

TOPIC: 291006
KNOWLEDGE: K1.16 [2.5/2.6]
QID: B6617 (P6616)

Refer to the drawing of an operating lube oil heat exchanger (see figure below).

If mineral deposits accumulate on the inside of the cooling water tubes, cooling water outlet temperature will _____; and lube oil outlet temperature will _____. (Assume the lube oil and cooling water inlet temperatures and flow rates do not change.)

A. increase; decrease

B. increase; increase

C. decrease; decrease

D. decrease; increase

ANSWER: D.

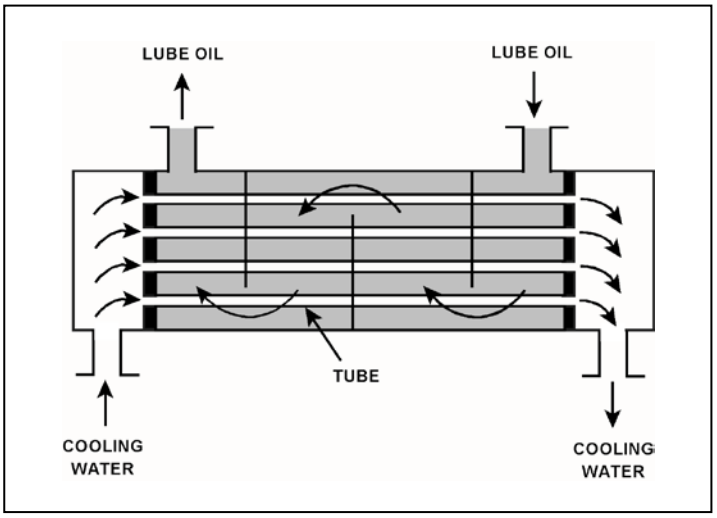

TOPIC: 291006
KNOWLEDGE: K1.17 [2.7/2.8]
QID: B234

Refer to the drawing of an operating cooling water system (see figure below) that is transferring heat between a low pressure (LP) and high pressure (HP) water system.

Which one of the following effects will initially occur as a result of a tube failure in the heat exchanger?

A. Level in the surge tank will increase.

B. HP fluid pump flow rate will decrease.

C. HP fluid heat exchanger differential temperature will increase.

D. LP fluid heat exchanger outlet temperature will increase.

ANSWER: D.

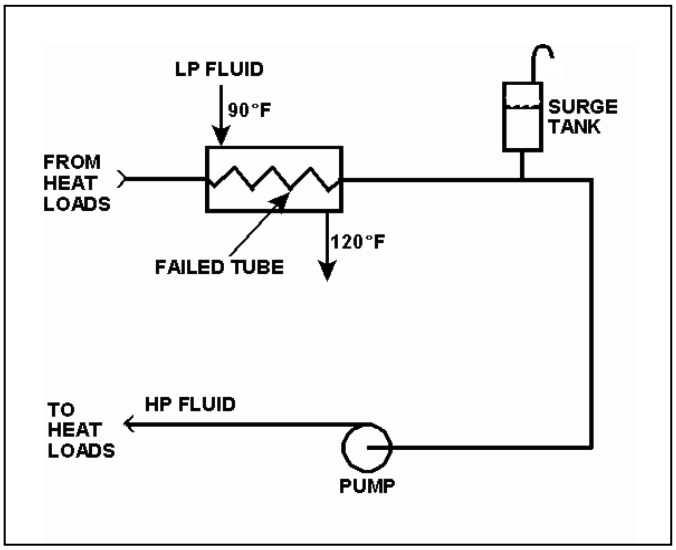

TOPIC: 291006
KNOWLEDGE: K1.17 [2.7/2.8]
QID: B332 (P331)

A nuclear power plant is operating at steady-state conditions with the main generator supplying 1,000 MW to the power grid. Assume main generator load remains constant.

If one percent of the tubes in the main condenser become plugged, condenser absolute pressure will _____; and condenser hotwell temperature will _____.

A. increase; increase

B. decrease; increase

C. increase; decrease

D. decrease; decrease

ANSWER: A.

TOPIC: 291006
KNOWLEDGE: K1.17 [2.7/2.8]
QID: B333 (P333)

A nuclear power plant is operating normally at 50 percent power. Which one of the following will result from a cooling water tube rupture in the main condenser?

A. Increased condenser vacuum.

B. Increased conductivity of the condensate.

C. Decreased condensate pump available net positive suction head.

D. Decreased condensate pump flow rate.

ANSWER: B.

TOPIC: 291006
KNOWLEDGE: K1.17 [2.7/2.8]
QID: B1535 (P1234)

Refer to the drawing of an operating cooling water system (see figure below).

Which one of the following will occur as a result of the indicated tube failure in the heat exchanger?

A. High pressure (HP) fluid inventory increases.

B. Pressure in the low pressure (LP) system decreases.

C. Temperature in the low pressure (LP) system increases.

D. Level in the surge tank decreases.

ANSWER: D.

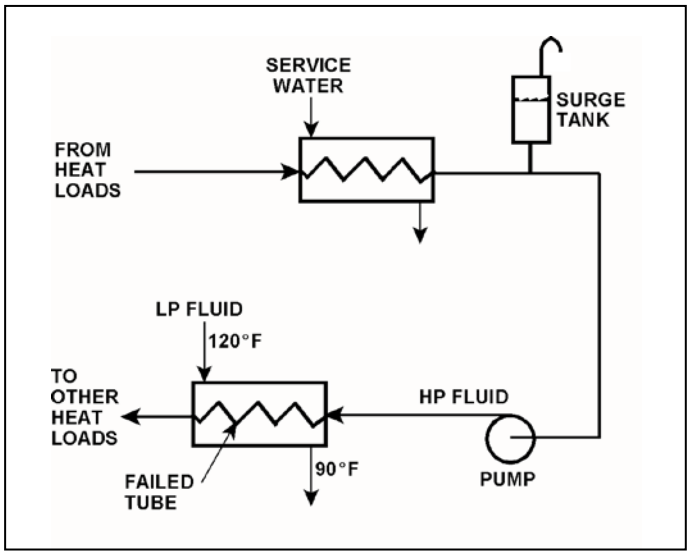

TOPIC: 291006
KNOWLEDGE: K1.17 [2.7/2.8]
QID: B1931 (P1134)

With a nuclear power plant operating at 50 percent power, which one of the following will occur as a result of multiple tube leaks in the main condenser? (Assume that main condenser vacuum does not change.)

A. Condensate depression will decrease.

B. Condensate conductivity will increase.

C. Condensate oxygen concentration will decrease.

D. Condenser inlet cooling water flow rate will decrease.

ANSWER: B.

TOPIC: 291006
KNOWLEDGE: K1.17 [2.7/2.8]
QID: B3535 (P234)

Refer to the drawing of an operating cooling water system (see figure below).

Which one of the following effects would occur as a result of the failed tube in the heat exchanger?

A. Level in the surge tank increases.

B. Flow in the low pressure (LP) system reverses.

C. Pressure in the low pressure (LP) system decreases.

D. Low pressure (LP) fluid heat exchanger outlet temperature decreases.

ANSWER: D.

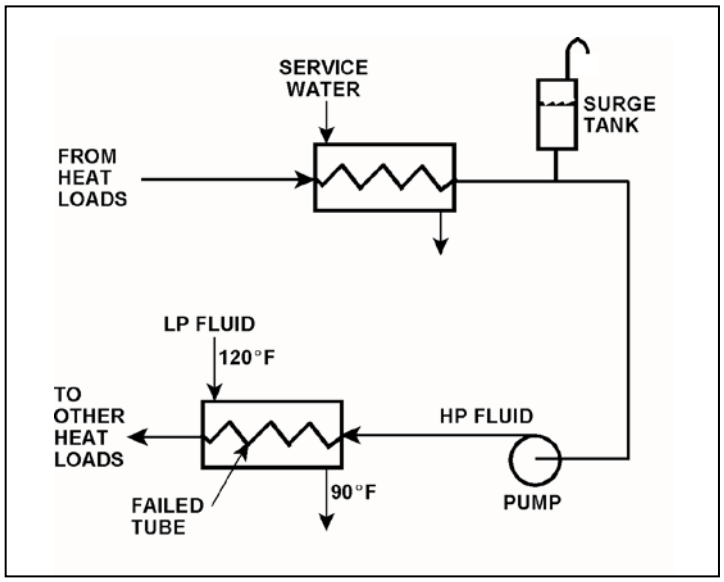

TOPIC: 291006
KNOWLEDGE: K1.17 [2.7/2.8]
QID: B4918 (P4917)

A nuclear power plant was initially operating at steady-state 50 percent power with 50 gpm of main condenser cooling water inleakage through a cooling water tube rupture. Power was then increased, and is currently stable at 60 percent.

Assume the size of the cooling water tube rupture does not change, and the main condenser cooling water inlet pressure and inlet temperature do not change.

When compared to the flow rate of main condenser cooling water inleakage at 50 percent power, the flow rate of cooling water inleakage at 60 percent power is _____ because the main condenser pressure at 60 percent power is _____.

A. higher; lower

B. higher; higher

C. lower; lower

D. lower; higher

ANSWER: D.

TOPIC: 291006
KNOWLEDGE: K1.18 [2.8/2.9]
QID: B936 (P1912)

During normal nuclear power plant operation, why does air entry into the main condenser reduce the thermodynamic efficiency of the steam cycle?

A. The rate of steam flow through the main turbine increases.

B. The condensate subcooling in the main condenser decreases.

C. The enthalpy of the low pressure turbine exhaust increases.

D. The air mixes with the steam and enters the condensate.

ANSWER: C.

TOPIC: 291006
KNOWLEDGE: K1.18 [2.8/2.9]
QID: B1236

During power plant operation, the accumulation of air and non-condensible gases in the main condenser will...

A. not affect turbine work output.

B. not affect turbine efficiency.

C. increase generator load.

D. increase turbine backpressure.

ANSWER: D.

TOPIC: 291006
KNOWLEDGE: K1.18 [2.9/3.0]
QID: B4018 (P4016)

Refer to the drawing of an operating lube oil heat exchanger (see figure below).

The heat exchanger is operating with the following initial parameters:

Cooling water inlet temperature ($T_{cw\text{-}in}$) = 75°F
Cooling water outlet temperature ($T_{cw\text{-}out}$) = 95°F
Oil inlet temperature ($T_{oil\text{-}in}$) = 150°F
Oil outlet temperature ($T_{oil\text{-}out}$) = 120°F

Air introduction to the heat exchanger results in some of the heat exchanger tubes becoming uncovered. As a result, $T_{cw\text{-}out}$ decreases to 91°F. Assume the inlet temperatures, mass flow rates, and specific heats of both fluids do <u>not</u> change.

Which one of the following will be the resulting temperature of the lube oil exiting the heat exchanger ($T_{oil\text{-}out}$)?

A. 126°F

B. 130°F

C. 134°F

D. 138°F

ANSWER: A.

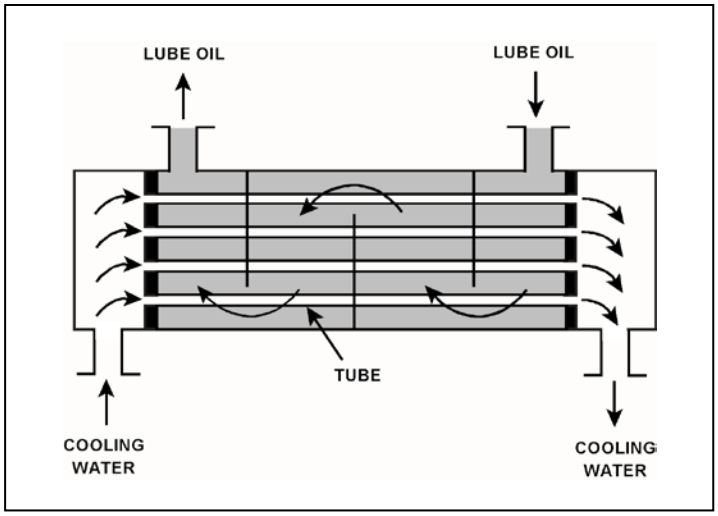

TOPIC: 291006
KNOWLEDGE: K1.18 [2.8/2.9]
QID: B4817 (P4816)

Refer to the drawing of an operating lube oil heat exchanger (see figure below).

The heat exchanger is operating with the following initial parameters:

Cooling water inlet temperature ($T_{cw\text{-}in}$) = 75°F
Cooling water outlet temperature ($T_{cw\text{-}out}$) = 95°F
Oil inlet temperature ($T_{oil\text{-}in}$) = 150°F
Oil outlet temperature ($T_{oil\text{-}out}$) = 110°F

Air leakage into the heat exchanger causes some of the heat exchanger tubes to become uncovered. As a result, $T_{cw\text{-}out}$ decreases to 89°F. Assume the inlet temperatures, mass flow rates, and specific heats of both fluids do <u>not</u> change.

Which one of the following will be the new approximate temperature of the lube oil exiting the heat exchanger ($T_{oil\text{-}out}$)?

A. 116°F

B. 122°F

C. 130°F

D. 138°F

ANSWER: B.

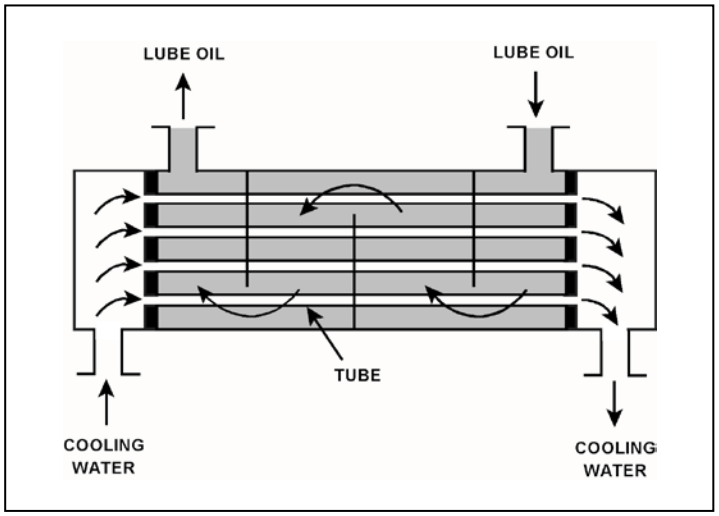

TOPIC: 291006
KNOWLEDGE: K1.18 [2.8/2.9]
QID: B5418 (P5417)

Refer to the drawing of an operating lube oil heat exchanger (see figure below).

The heat exchanger was operating with the following initial parameters:

Cooling water inlet temperature ($T_{cw\text{-}in}$) = 71°F
Cooling water outlet temperature ($T_{cw\text{-}out}$) = 91°F
Oil inlet temperature ($T_{oil\text{-}in}$) = 175°F
Oil outlet temperature ($T_{oil\text{-}out}$) = 125°F

The heat exchanger was vented, resulting in the following current parameters:

Cooling water inlet temperature ($T_{cw\text{-}in}$) = 71°F
Cooling water outlet temperature ($T_{cw\text{-}out}$) = 95°F
Oil inlet temperature ($T_{oil\text{-}in}$) = 175°F
Oil outlet temperature ($T_{oil\text{-}out}$) = ?

Assume that the mass flow rates and specific heats of both fluids were unchanged.

Which one of the following is the <u>current</u> lube oil outlet temperature ($T_{oil\text{-}out}$)?

A. 115°F

B. 120°F

C. 130°F

D. 135°F

ANSWER: A.

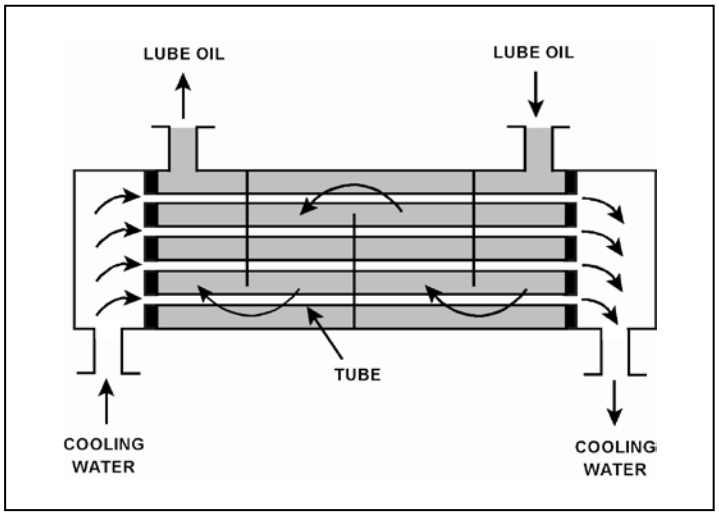

TOPIC: 291007
KNOWLEDGE: K1.01 [2.6/2.7]
QID: B637 (P2135)

High differential pressure in a demineralizer could be caused by all of the following except...

A. resin exhaustion.

B. resin overheating.

C. crud buildup.

D. high flow rate.

ANSWER: A.

TOPIC: 291007
KNOWLEDGE: K1.01 [2.6/2.7]
QID: B737 (P935)

A demineralizer is being used in a water purification system. How will the accumulation of suspended solids in the demineralizer affect the performance of the demineralizer?

A. The rate of resin depletion will increase.

B. The flow rate of water through the demineralizer will increase.

C. The differential pressure across the demineralizer will decrease.

D. The rate of unwanted ion removal from the system will decrease.

ANSWER: D.

TOPIC: 291007
KNOWLEDGE: K1.02 [2.8/2.9]
QID: B152 (P1835)

The ion exchange efficiency of a condensate demineralizer can be determined by...

A. sampling the inlet and outlet of the demineralizer to determine the change in conductivity.

B. performing a calculation based on the ratio between the inlet pH divided by the outlet pH.

C. sampling the inlet and outlet of the demineralizer to determine the difference in activity.

D. performing a calculation based on the change in differential pressure across the demineralizer.

ANSWER: A.

TOPIC: 291007
KNOWLEDGE: K1.02 [2.5/2.6]
QID: B839 (P835)

The decontamination factor for ionic impurities of a demineralizer can be expressed as...

A. Inlet Conductivity minus Outlet Conductivity.

B. Outlet Conductivity minus Inlet Conductivity.

C. Inlet Conductivity divided by Outlet Conductivity.

D. Outlet Conductivity divided by Inlet Conductivity.

ANSWER: C.

TOPIC: 291007
KNOWLEDGE: K1.02 [2.5/2.6]
QID: B1437 (P2236)

To determine the decontamination factor for ionic impurities of a demineralizer, the two parameters that must be monitored are inlet and outlet...

A. pH.

B. conductivity.

C. suspended solids.

D. pressure.

ANSWER: B.

TOPIC: 291007
KNOWLEDGE: K1.02 [2.5/2.6]
QID: B2737 (P2735)

What percentage of impurities is being removed from the water passing through an ion exchanger if the ion exchanger has a decontamination factor of 25?

A. 99 percent

B. 96 percent

C. 88 percent

D. 75 percent

ANSWER: B.

TOPIC: 291007
KNOWLEDGE: K1.02 [2.5/2.6]
QID: B2837 (P936)

The ion exchange efficiency of a condensate demineralizer is determined by performing a calculation using the...

A. change in conductivity at the outlet of the demineralizer over a period of time.

B. change in pH at the outlet of the demineralizer over a period of time.

C. demineralizer inlet and outlet conductivity.

D. demineralizer inlet and outlet pH.

ANSWER: C.

TOPIC: 291007
KNOWLEDGE: K1.02 [2.5/2.6]
QID: B3238 (P3235)

What percentage of ionic impurities is being removed from the water passing through an ion exchanger if the ion exchanger has a decontamination factor of 50?

A. 98 percent

B. 96 percent

C. 75 percent

D. 50 percent

ANSWER: A.

TOPIC: 291007
KNOWLEDGE: K1.02 [2.5/2.6]
QID: B3437 (P3435)

The decontamination factor of a condensate demineralizer has just been determined to be 50, based on conductivity measurements.

If condensate having a conductivity of 20 µmho/cm is flowing into this demineralizer, which one of the following is the conductivity of the condensate at the outlet of the demineralizer?

A. 0.4 µmho/cm

B. 1.0 µmho/cm

C. 4.0 µmho/cm

D. 10.0 µmho/cm

ANSWER: A.

TOPIC: 291007
KNOWLEDGE: K1.02 [2.5/2.6]
QID: B3637 (P3636)

The decontamination factor of a condensate demineralizer has just been determined to be 10, based on conductivity measurements.

If condensate having a conductivity of 20 µmho/cm is flowing into this demineralizer, which one of the following is the conductivity of the condensate at the outlet of the demineralizer?

A. 0.5 µmho/cm

B. 2.0 µmho/cm

C. 5.0 µmho/cm

D. 10.0 µmho/cm

ANSWER: B.

TOPIC: 291007
KNOWLEDGE: K1.02 [2.5/2.6]
QID: B4219 (P4219)

The decontamination factor of a condensate demineralizer has just been determined to be 5.0, based on conductivity measurements.

If condensate having a conductivity of 20 μmho/cm is flowing into this demineralizer, which one of the following is the conductivity of the condensate at the outlet of the demineralizer?

A. 0.4 μmho/cm

B. 4.0 μmho/cm

C. 10.0 μmho/cm

D. 100.0 μmho/cm

ANSWER: B.

TOPIC: 291007
KNOWLEDGE: K1.02 [2.5/2.6]
QID: B4719 (P4718)

What percentage of ionic impurities is being removed from the water passing through an ion exchanger if the ion exchanger has a decontamination factor of 1.0?

A. 100 percent

B. 99 percent

C. 1 percent

D. 0 percent

ANSWER: D.

TOPIC: 291007
KNOWLEDGE: K1.03 [2.8/2.9]
QID: B38

What adverse effect occurs due to channeling in a demineralizer?

A. Increased demineralizer outlet conductivity, because much of the resin is essentially bypassed

B. Loss of resin, due to agitation resulting from increased fluid velocity through the demineralizer

C. Resin dryout and cracking, because much of the resin is essentially bypassed

D. Resin damage, due to the increased velocity of fluid through the demineralizer

ANSWER: A.

TOPIC: 291007
KNOWLEDGE: K1.03 [2.5/2.6]
QID: B236

Channeling in a demineralizer is undesirable because the...

A. ability of the resin bed to remove undesirable ions will decrease and cause outlet conductivity to increase.

B. ability of the resin bed to remove suspended solids will decrease and cause outlet pH to increase.

C. resulting high velocity fluid flow will cause agitation of the resin beads and the release of unwanted ions.

D. resulting high velocity fluid flow can cause significant damage to resin retention elements.

ANSWER: A.

TOPIC: 291007
KNOWLEDGE: K1.03 [2.8/2.9]
QID: B838 (P1636)

Which one of the following, if processed through a demineralizer, will rapidly reduce the effectiveness of the demineralizer?

A. Oily water

B. Condensate

C. Makeup water

D. Radioactive water

ANSWER: A.

TOPIC: 291007
KNOWLEDGE: K1.03 [2.8/2.9]
QID: B1038

Which one of the following refers to the condition in which large portions of a demineralizer resin bed are bypassed, thereby allowing waterborne impurities to reach the outlet?

A. Channeling

B. Leaching

C. Exhaustion

D. Mineralization

ANSWER: A.

TOPIC: 291007
KNOWLEDGE: K1.03 [2.8/2.9]
QID: B1237 (P2035)

Which one of the following conditions may lead to channeling in an operating demineralizer?

A. Suspended solids forming a mat on the surface layer of the resin bed.

B. A sudden 10°F decrease in the temperature of the influent to the demineralizer.

C. Exhaustion of the resin bed due to high conductivity of the demineralizer influent.

D. Operation of the demineralizer with influent flow rate at 10 percent below design flow rate.

ANSWER: A.

TOPIC: 291007
KNOWLEDGE: K1.04 [2.8/2.9]
QID: B118

The purpose of a mixed-bed demineralizer is to...

A. increase the conductivity of water with little effect on pH.

B. decrease the conductivity of water with little effect on pH.

C. increase the pH of water by reducing the number of positively charged ions in it.

D. decrease the pH of water by increasing the number of negatively charged ions in it.

ANSWER: B.

TOPIC: 291007
KNOWLEDGE: K1.05 [2.4/2.5]
QID: B1138 (P1535)

A condensate demineralizer differential pressure (D/P) gauge indicates 4.0 psid at 50% flow rate. Over the next two days plant power changes have caused condensate flow rate to vary between 25% and 100%.

Which one of the following combinations of condensate flow rate and demineralizer D/P, observed during the power changes, indicates an increase in the accumulation of insoluble corrosion products in the demineralizer?

	Condensate Flow Rate	Demineralizer D/P (psid)
A.	100%	15.0
B.	75%	9.0
C.	60%	5.0
D.	25%	2.0

ANSWER: D.

TOPIC: 291007
KNOWLEDGE: K1.05 [2.4/2.5]
QID: B1539 (P1537)

A higher than expected differential pressure across an operating demineralizer can be caused by...

A. exhaustion of the cation exchange resin.

B. channeling through the resin bed.

C. insufficient resin backwash.

D. decreased demineralizer inlet conductivity.

ANSWER: C.

TOPIC: 291007
KNOWLEDGE: K1.05 [2.4/2.5]
QID: B1736 (P1736)

A condensate demineralizer differential pressure (D/P) gauge indicates 6.0 psid at 50% flow rate. Which one of the following combinations of condensate flow rate and demineralizer D/P observed at various power levels over the next few days indicates an increase in the accumulation of insoluble corrosion products in the demineralizer?

	Condensate Flow Rate	Demineralizer D/P (psid)
A.	100%	23.5
B.	75%	16.5
C.	60%	8.5
D.	25%	1.5

ANSWER: B.

TOPIC: 291007
KNOWLEDGE: K1.05 [2.4/2.5]
QID: B2237 (P635)

How does demineralizer differential pressure indicate the condition of a demineralizer resin bed?

A. Low differential pressure indicates flow blockage in the demineralizer.

B. Low differential pressure indicates that the demineralizer resin bed is exhausted.

C. High differential pressure indicates flow blockage in the demineralizer.

D. High differential pressure indicates that the demineralizer resin bed is exhausted.

ANSWER: C.

TOPIC: 291007
KNOWLEDGE: K1.05 [2.4/2.5]
QID: B2338 (P2335)

A condensate demineralizer differential pressure (D/P) gauge indicates 4.0 psid at 50% flow rate. Over the next two days plant power changes have caused condensate flow rate to vary between 25% and 100%.

Which one of the following combinations of condensate flow and demineralizer D/P, observed during the power changes, indicates an increase in the accumulation of insoluble corrosion products in the demineralizer?

	Condensate Flow Rate	Demineralizer D/P (psid)
A.	100%	15.0
B.	75%	9.0
C.	40%	3.0
D.	25%	1.0

ANSWER: C.

TOPIC: 291007
KNOWLEDGE: K1.05 [2.4/2.5]
QID: B2638 (P2235)

A condensate demineralizer differential pressure (D/P) gauge indicates 4.0 psid at 50% flow rate. Which one of the following combinations of condensate flow and demineralizer D/P observed at various power levels over the next few days indicates an increase in the accumulation of insoluble corrosion products in the demineralizer?

	Condensate Flow Rate	Demineralizer D/P (psid)
A.	25%	0.9
B.	60%	6.3
C.	75%	8.7
D.	100%	15.6

ANSWER: B.

TOPIC: 291007
KNOWLEDGE: K1.05 [2.4/2.5]
QID: B2938

A condensate demineralizer differential pressure (D/P) gauge indicates 9.0 psid at 50% flow. Over the next two days, plant power changes cause condensate flow to vary between 10% and 100%.

Which one of the following combinations of condensate flow and demineralizer D/P, if observed during the power changes, would indicate an increase in the accumulation of insoluble corrosion products in the demineralizer?

	Condensate Flow Rate	Demineralizer D/P (psid)
A.	10%	0.3
B.	25%	3.3
C.	75%	20.3
D.	100%	35.3

ANSWER: B.

TOPIC: 291007
KNOWLEDGE: K1.06 [2.7/2.7]
QID: B238

The temperature of the water passing through a demineralizer must be controlled because excessively hot water will...

A. increase the ion exchange rate for hydronium ions, thereby changing effluent pH.

B. degrade the corrosion inhibitor applied to the inner wall of the demineralizer.

C. result in excessive demineralizer retention element thermal expansion, thereby releasing resin.

D. reduce the affinity of the demineralizer resin for ion exchange.

ANSWER: D.

TOPIC: 291007
KNOWLEDGE: K1.06 [2.7/2.7]
QID: B438

There is a temperature limit on the water entering a demineralizer because excessively hot water will...

A. decompose the resin beads.

B. increase the potential for channeling.

C. cause the filter element to swell and release the resin.

D. dislodge and wash the resin fines off the filter element.

ANSWER: A.

TOPIC: 291007
KNOWLEDGE: K1.07 [2.3/2.5]
QID: B938

The cation exchange resin in a mixed-bed demineralizer removes undesirable _____ ions from solution while releasing desirable _____ ions into solution.

A. negative; negative

B. negative; positive

C. positive; negative

D. positive; positive

ANSWER: D.

TOPIC: 291007
KNOWLEDGE: K1.07 [2.3/2.5]
QID: B1039

The anion exchange resin in a mixed-bed demineralizer releases desirable _____ ions into solution while removing undesirable _____ charged ions from solution.

A. hydroxide; negatively

B. hydroxide; positively

C. hydrogen; negatively

D. hydrogen; positively

ANSWER: A.

TOPIC: 291007
KNOWLEDGE: K1.07 [2.3/2.5]
QID: B1639

If a dilute sodium chloride water solution is passed through an ideal mixed-bed demineralizer, the effluent stream would consist of...

A. a sodium hydroxide solution.

B. a hydrogen chloride solution.

C. a sodium hypochlorite solution.

D. pure water.

ANSWER: D.

TOPIC: 291007
KNOWLEDGE: K1.07 [2.3/2.5]
QID: B1738

Which one of the following describes the process of backwashing a mixed-resin deep bed demineralizer?

A. Alternating the flow of dilute acidic and caustic solutions through the demineralizer to remove suspended solids and colloidal matter.

B. Alternating the flow of dilute acidic and caustic solutions through the demineralizer to remove ionic impurities.

C. Reversing flow of pure water through the demineralizer to remove suspended solids and colloidal matter.

D. Reversing flow of pure water through the demineralizer to remove ionic impurities.

ANSWER: C.

TOPIC: 291007
KNOWLEDGE: K1.07 [2.3/2.5]
QID: B1838 (P235)

When a mixed-bed demineralizer resin is exhausted, the resin should be replaced or regenerated because...

A. ions previously removed by the resin will be released into solution.

B. the resin will fracture and particles may escape through the retention screens.

C. particles previously filtered out of solution will be released.

D. the resin will physically bond together, thereby causing flow blockage.

ANSWER: A.

TOPIC: 291007
KNOWLEDGE: K1.07 [2.3/2.5]
QID: B2438

Which one of the following describes the process of regenerating a mixed-resin deep bed demineralizer? (Assume the demineralizer has already been backwashed.)

A. Alternating the flow of acidic and caustic solutions through the demineralizer to remove suspended solids and colloidal matter.

B. Alternating the flow of acidic and caustic solutions through the demineralizer to remove ionic impurities.

C. Reversing the flow of pure water through the demineralizer to remove suspended solids and colloidal matter.

D. Reversing the flow of pure water through the demineralizer to remove ionic impurities.

ANSWER: B.

TOPIC: 291007
KNOWLEDGE: K1.07 [2.3/2.5]
QID: B5419

Water is passing through an ion exchanger that contains only anion exchange resin. Currently, every available ion exchange site in the resin has exchanged its original anion and is occupied by a chloride (Cl^-) anion. Assuming that water temperature does not change, what will be the effect on the ion exchanger if a new anion impurity is introduced into the water entering the ion exchanger?

A. The new anions will bypass the occupied ion exchange sites under all circumstances.

B. The new anions will take the place of the Cl^- anions on the ion exchange sites under all circumstances.

C. The new anions will take the place of the Cl^- anions on the ion exchange sites only if the new anions have a greater negative charge than the Cl^- anions.

D. The new anions will take the place of the Cl^- anions on the ion exchange sites only if the new anions have a greater affinity for the anion exchange resin.

ANSWER: D.

TOPIC: 291007
KNOWLEDGE: K1.07 [2.3/2.5]
QID: B5720

If water containing positively charged ionic impurities passes through a mixed-bed ion exchanger, the positively charged ionic impurities will be removed by the _____ exchange resin, with the corresponding release of _____ ions into the water.

A. anion; negative

B. anion; positive

C. cation; negative

D. cation; positive

ANSWER: D.

TOPIC: 291007
KNOWLEDGE: K1.07 [2.3/2.5]
QID: B5820 (P5819)

During a nuclear power plant cooldown, the reactor experiences a large crud burst. After 10 minutes, with stable reactor coolant chemistry parameters, the operators begin to record parameters for the in-service reactor coolant purification ion exchanger. The ion exchanger was recently filled with fresh resin.

Assuming no additional operator actions, what trend will the recorded parameters show during the next few hours?

A. Increasing ion exchanger inlet water conductivity.

B. Increasing ion exchanger outlet water conductivity.

C. Increasing flow rate through the ion exchanger.

D. Increasing radiation levels around the ion exchanger.

ANSWER: D.

TOPIC: 291007
KNOWLEDGE: K1.07 [2.3/2.5]
QID: B6320 (P3537)

After 12 months of operation at 100 percent power, a reactor was shut down and a plant cooldown is in progress. An operator reports that the general area radiation level near the in-service reactor coolant ion exchanger has increased significantly since the cooldown began several hours ago.

Which one of the following is a typical cause of these indications, resulting from the cooldown?

A. Increased radioactive tritium in the reactor coolant.

B. Increased radioactive oxygen-16 dissolved in the reactor coolant.

C. Increased radioactive nitrogen-16 dissolved in the reactor coolant.

D. Increased radioactive corrosion products suspended in the reactor coolant.

ANSWER: D.

TOPIC: 291007
KNOWLEDGE: K1.07 [2.3/2.5]
QID: B6419

Water is passing through an ion exchanger that contains only cation exchange resin. Currently, every available ion exchange site in the resin has exchanged its original cation and is occupied by a sodium (Na^+) ion. Assuming that water temperature does not change, what will be the effect on the ion exchanger if a new cation impurity, other than Na^+, is introduced into the water entering the ion exchanger?

A. The new cations will bypass the occupied ion exchange sites under all circumstances.

B. The new cations will take the place of the Na^+ ions on the ion exchange sites under all circumstances.

C. The new cations will take the place of the Na^+ ions on the ion exchange sites only if the new cations have a greater positive charge than the Na^+ ions.

D. The new cations will take the place of the Na^+ ions on the ion exchange sites only if the resin has a greater affinity for the new cations.

ANSWER: D.

TOPIC: 291007
KNOWLEDGE: K1.07 [2.3/2.5]
QID: B6620

Water containing dissolved sodium (Na^+) and chloride (Cl^-) ionic impurities is passing through an ion exchanger that contains only anion exchange resin. How are the ionic impurities being affected as the water flows through the ion exchanger?

A. Sodium ions are being exchanged, but the chloride ions are unaffected.

B. Chloride ions are being exchanged, but the sodium ions are unaffected.

C. Sodium ions are being exchanged, and chloride ions are being removed by filtration.

D. Chloride ions are being exchanged, and sodium ions are being removed by filtration.

ANSWER: B.

TOPIC: 291007
KNOWLEDGE: K1.07 [2.3/2.5]
QID: B7220

Water containing dissolved sodium (Na^+) and chloride (Cl^-) ionic impurities is passing through an ion exchanger that contains only cation exchange resin. How are the ionic impurities being affected as the water flows through the ion exchanger?

A. Sodium ions are being exchanged, but the chloride ions are unaffected.

B. Chloride ions are being exchanged, but the sodium ions are unaffected.

C. Sodium ions are being exchanged, and chloride ions are being removed by filtration.

D. Chloride ions are being exchanged, and sodium ions are being removed by filtration.

ANSWER: A.

TOPIC: 291007
KNOWLEDGE: K1.08 [2.6/2.6]
QID: B337 (P1836)

A fresh demineralizer that continuously processes water with a high concentration of suspended solids will first develop an increase in the...

A. conductivity at the demineralizer outlet.

B. decontamination factor of the demineralizer.

C. differential pressure across the demineralizer.

D. pH at the demineralizer outlet.

ANSWER: C.

TOPIC: 291007
KNOWLEDGE: K1.08 [2.6/2.6]
QID: B539 (P836)

A lower than expected differential pressure across a mixed-bed demineralizer is an indication of...

A. depletion of the resin.

B. channeling through the resin bed.

C. improper resin regeneration.

D. a decrease in inlet conductivity.

ANSWER: B.

TOPIC: 291007
KNOWLEDGE: K1.08 [2.6/2.6]
QID: B639 (P1036)

As the operating time of a demineralizer resin bed increases, the differential pressure across the bed...

A. increases due to depletion of the resin ion exchange sites.

B. increases due to trapping of suspended solids.

C. decreases due to gradual resin breakdown.

D. decreases due to erosion of the resin ion exchange sites.

ANSWER: B.

TOPIC: 291007
KNOWLEDGE: K1.09 [2.7/2.7]
QID: B39 (P535)

Which one of the following is an indication of resin exhaustion in a demineralizer?

A. An increase in suspended solids in the effluent.

B. A decrease in the flow rate through the demineralizer.

C. An increase in the conductivity of the effluent.

D. An increase in the differential pressure across the demineralizer.

ANSWER: C.

TOPIC: 291007
KNOWLEDGE: K1.09 [2.7/2.7]
QID: B239 (P2637)

A result of proper demineralizer operation on water with ionic impurities is that the exiting water will always have a...

A. higher pH.

B. lower pH.

C. higher conductivity.

D. lower conductivity.

ANSWER: D.

TOPIC: 291008
KNOWLEDGE: K1.02 [3.4/3.5]
QID: B1141 (P5020)

Which one of the following describes the local overcurrent trip flag indicators for a breaker?

A. They actuate prior to breaker tripping to warn of imminent protective action.

B. They indicate breaker overcurrent trip actuation during and after breaker trip actuation.

C. When actuated, they indicate that the associated breaker has failed to trip open.

D. When actuated, they indicate that the breaker overcurrent trip relay has been reset.

ANSWER: B.

TOPIC: 291008
KNOWLEDGE: K1.02 [3.4/3.5]
QID: B1841 (P838)

Which one of the following describes the normal operation of a local breaker overcurrent trip flag indicator?

A. Actuates when no lockout is present; satisfies an electrical interlock to remotely close a breaker.

B. Actuates when a breaker overcurrent trip has occurred; can be manually reset when the overcurrent condition clears.

C. Actuates when a breaker has failed to trip on an overcurrent condition; can be manually reset when the overcurrent condition clears.

D. Actuates to cause a breaker trip when the overcurrent trip setpoint is reached; can be remotely reset when the overcurrent condition clears.

ANSWER: B.

TOPIC: 291008
KNOWLEDGE: K1.02 [3.4/3.5]
QID: B2240 (P1444)

Breaker local overcurrent trip flag indicators, when actuated, indicate that...

A. a breaker trip will occur unless current is reduced.

B. a breaker overcurrent condition is responsible for a breaker trip.

C. an overcurrent condition has cleared and the breaker can be closed.

D. the associated breaker has failed to trip open during an overcurrent condition.

ANSWER: B.

TOPIC: 291008
KNOWLEDGE: K1.02 [3.4/3.5]
QID: B3440 (P3444)

Given the following indications for an open 4,160 VAC breaker:

The local OPEN/CLOSED mechanical flag indicates OPEN.
A breaker overcurrent trip flag is actuated on one phase.
The line-side voltmeter indicates 4,160 VAC.
The load-side voltmeter indicates 0 VAC.

Assuming <u>no</u> operator actions were taken since the breaker opened, which one of the following could have caused the breaker to open?

A. A ground fault caused an automatic breaker trip.

B. A loss of control power caused an automatic breaker trip.

C. An operator opened the breaker locally.

D. An operator opened the breaker from a remote location.

ANSWER: A.

TOPIC: 291008
KNOWLEDGE: K1.02 [3.4/3.5]
QID: B4121 (P4120)

Given the following indications for an open 4,160 VAC breaker:

All phase overcurrent trip flags are reset.
The control power fuses indicate blown.
The line-side voltmeter indicates 4,160 VAC.
The load-side voltmeter indicates 0 VAC.

Assuming no operator actions were taken since the breaker opened, which one of the following could have caused the breaker to open?

A. A ground fault caused an automatic breaker trip.

B. A loss of control power caused an automatic breaker trip.

C. An operator tripped the breaker manually at the breaker cabinet.

D. An operator tripped the breaker manually from a remote location.

ANSWER: C.

TOPIC: 291008
KNOWLEDGE: K1.03 [3.3/3.4]
QID: B40 (P338)

Which one of the following will cause a loss of indication from the remote breaker position indicating lights associated with a typical 480 VAC load supply breaker?

A. Locally opening the breaker.

B. Loss of breaker line voltage.

C. Removing the breaker control power fuses.

D. Burnout of the local breaker position indicating lights.

ANSWER: C.

TOPIC: 291008
KNOWLEDGE: K1.03 [3.3/3.4]
QID: B339

The following remote indications are observed for a 480 VAC load supply breaker. (The breaker is normally open.)

Red indicating light is on.
Green indicating light is off.
Load voltage indicates 0 VAC.
Line voltage indicates 480 VAC.

What is the condition of the breaker?

A. Open and racked in

B. Closed and racked in

C. Open and racked to the TEST position

D. Closed and racked to the TEST position

ANSWER: D.

TOPIC: 291008
KNOWLEDGE: K1.03 [3.3/3.4]
QID: B1440 (P1438)

While remotely investigating the condition of a normally-open breaker that feeds a motor control center (MCC), an operator observes the following indications:

Green breaker position indicating light is out.
Red breaker position indicating light is lit.
MCC voltmeter indicates normal voltage.
MCC ammeter indicates zero amperes.

Based on these indications, the operator should report that the breaker is _____ and racked _____.

A. open; in

B. closed; in

C. open; out

D. closed; out

ANSWER: B.

TOPIC: 291008
KNOWLEDGE: K1.03 [3.3/3.4]
QID: B1640

While remotely investigating the condition of a typical normally open motor control center (MCC) feeder breaker, an operator observes the following indications:

Green breaker position indicating light is out.
Red breaker position indicating light is lit.
MCC voltmeter indicates zero volts.
MCC ammeter indicates zero amperes.

Based on these indications, the operator can accurately report that the breaker is _____ and racked _____.

A. open; out

B. closed; out

C. open; to the TEST position

D. closed; to the TEST position

ANSWER: D.

TOPIC: 291008
KNOWLEDGE: K1.03 [3.3/3.4]
QID: B2143 (P1838)

While remotely investigating the condition of a typical normally-open motor control center (MCC) feeder breaker, an operator observes the following indications:

Green breaker position indicating light is lit.
Red breaker position indicating light is out.
MCC voltmeter indicates zero volts.
MCC ammeter indicates zero amperes.

Based on these indications, the operator can accurately report that the breaker is open and racked to _____ position.

A. the OUT

B. the IN

C. the TEST

D. an unknown

ANSWER: D.

TOPIC: 291008
KNOWLEDGE: K1.03 [3.3/3.4]
QID: B2640 (P1932)

While remotely investigating the condition of a normally-open 480 VAC motor control center (MCC) feeder breaker, an operator observes the following indications:

Green breaker position indicating light is out.
Red breaker position indicating light is lit.
MCC voltmeter indicates 480 VAC.
MCC ammeter indicates zero amperes.

Based on these indications, the operator should report that the feeder breaker is _____ and racked _____.

A. open; in

B. closed; in

C. open; to the TEST position

D. closed; to the TEST position

ANSWER: B.

TOPIC: 291008
KNOWLEDGE: K1.03 [3.3/3.4]
QID: B2842 (P1140)

The following indications are observed in the control room for a normally open breaker that directly starts/stops a 480 VAC motor:

Red position indicating light is on.
Green position indicating light is off.
Load current indicates 50 amps.
Supply voltage indicates 480 VAC.

What is the condition of the breaker?

A. Open and racked to TEST position

B. Closed and racked to TEST position

C. Open and racked in

D. Closed and racked in

ANSWER: D.

TOPIC: 291008
KNOWLEDGE: K1.03 [3.3/3.4]
QID: B6021 (P6022)

While remotely investigating the condition of a normally-open feeder breaker to a 480 VAC motor control center (MCC), a control room operator observes the following indications:

Green breaker position indicating light is out.
Red breaker position indicating light is lit.
MCC voltmeter indicates 0 VAC.
MCC ammeter indicates zero amperes.

Based on these indications, the operator should report that the feeder breaker is _____ and racked _____.

A. open; in

B. closed; out

C. open; to the TEST position

D. closed; to the TEST position

ANSWER: D.

TOPIC: 291008
KNOWLEDGE: K1.03 [3.3/3.4]
QID: B7221 (P7222)

While remotely investigating the condition of a normally-open 480 VAC motor control center (MCC) feeder breaker, an operator observes the following indications:

Green breaker position indicating light is out.
Red breaker position indicating light is lit.
MCC voltmeter indicates 480 VAC.
MCC ammeter indicates zero amperes.

Based on these indications, the operator should report that the feeder breaker is _____ and racked _____.

A. open; in

B. closed; in

C. open; to an unknown position

D. closed; to an unknown position

ANSWER: B.

TOPIC: 291008
KNOWLEDGE: K1.04 [3.3/3.3]
QID: B840 (P840)

A typical 120 VAC manual circuit breaker tripped due to overload. To close this circuit breaker, the handle must be moved from the...

A. OFF position directly to the ON position; trip latch reset is not required.

B. midposition directly to the ON position; trip latch reset is not required.

C. OFF position to the midposition to reset the trip latch, and then to the ON position.

D. midposition to the OFF position to reset the trip latch, and then to the ON position.

ANSWER: D.

TOPIC: 291008
KNOWLEDGE: K1.05 [3.0/3.1]
QID: B41

Which one of the following describes the operation of a thermal overload device for a large motor?

A. A balanced bridge circuit compares actual current to a fixed overcurrent setpoint and trips the breaker if the setpoint is exceeded.

B. When subjected to a sustained high current, an in-line heater coil overheats and completes a circuit to trip the breaker.

C. A temperature monitor senses the temperature of the operating equipment and trips the breaker if the temperature exceeds preset limits.

D. An in-line induction coil generates a secondary current proportional to the primary current, and closes breaker trip circuit contacts for a sustained overcurrent condition.

ANSWER: B.

TOPIC: 291008
KNOWLEDGE: K1.05 [3.0/3.1]
QID: B340 (P344)

A thermal overload device for a large motor protects the motor from...

A. sustained overcurrent by opening the motor breaker or motor line contacts.

B. sustained overcurrent by opening contacts in the motor windings.

C. instantaneous overcurrent by opening the motor breaker or motor line contacts.

D. instantaneous overcurrent by opening contacts in the motor windings.

ANSWER: A.

TOPIC: 291008
KNOWLEDGE: K1.05 [3.0/3.1]
QID: B2242 (P2644)

Thermal overload devices will provide the first electrical protection for a pump motor in the event of...

A. a locked rotor upon starting.

B. an electrical short circuit.

C. gradual motor bearing damage.

D. a sheared shaft during operation.

ANSWER: C.

TOPIC: 291008
KNOWLEDGE: K1.05 [3.0/3.1]
QID: B2641 (P528)

Which one of the following will provide the first motor protection against electrical damage caused by gradual bearing degradation?

A. Thermal overload device

B. Overcurrent trip relay

C. Underfrequency relay

D. Undervoltage device

ANSWER: A.

TOPIC: 291008
KNOWLEDGE: K1.06 [3.2/3.6]
QID: B116 (P640)

Refer to the drawing of a valve motor control circuit (see figure below).

One purpose of the K3 relay is to...

A. hold the valve open after one or both initiating conditions have cleared, even if the reset pushbutton (S1) is depressed.

B. hold the valve open even if one or both initiating conditions have cleared.

C. close the valve as soon as either initiating condition has cleared.

D. close the valve as soon as both initiating conditions have cleared.

ANSWER: B.

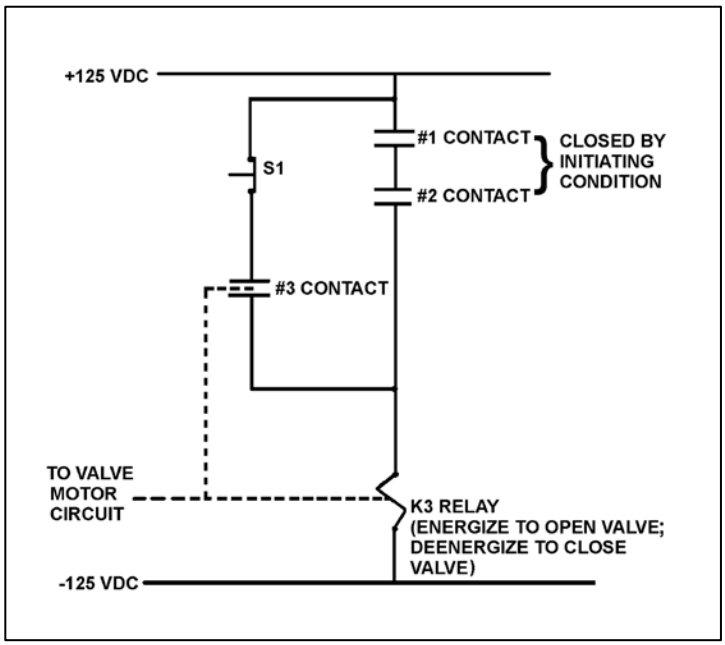

TOPIC: 291008
KNOWLEDGE: K1.06 [3.2/3.6]
QID: B541 (P540)

Refer to the drawing of a valve motor control circuit (see figure below).

What is the purpose of depressing the S1 pushbutton?

A. To deenergize the K3 relay after the initiating condition has cleared.

B. To prevent energizing the K3 relay when the initiating condition occurs.

C. To manually energize the K3 relay in the absence of the initiating condition.

D. To maintain the K3 relay energized after the initiating condition has cleared.

ANSWER: A.

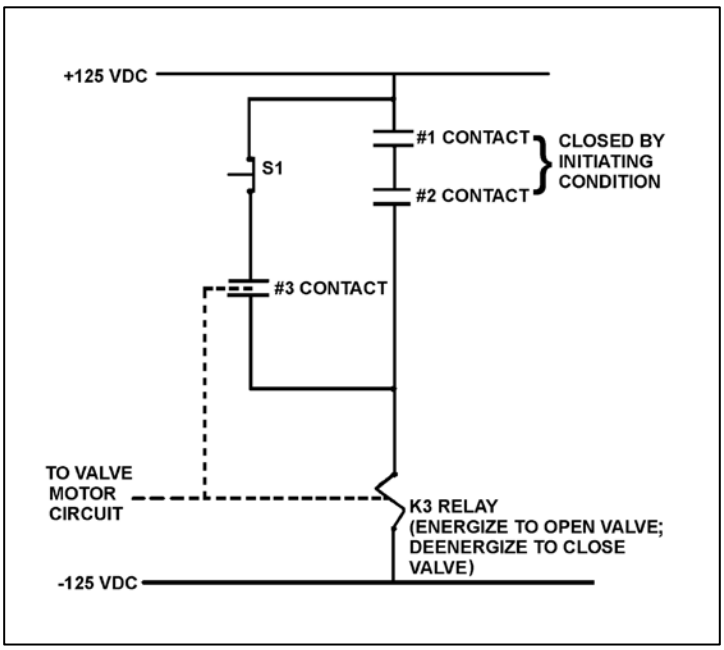

TOPIC: 291008
KNOWLEDGE: K1.06 [3.2/3.6]
QID: B742 (P742)

Refer to the drawing of a valve motor control circuit (see figure below).

The valve is currently open with the contact configuration as shown. If the S1 pushbutton is depressed, the valve will _____; and when the S1 pushbutton is subsequently released, the valve will _____.

A. remain open; remain open

B. close; remain closed

C. remain open; close

D. close; open

ANSWER: B.

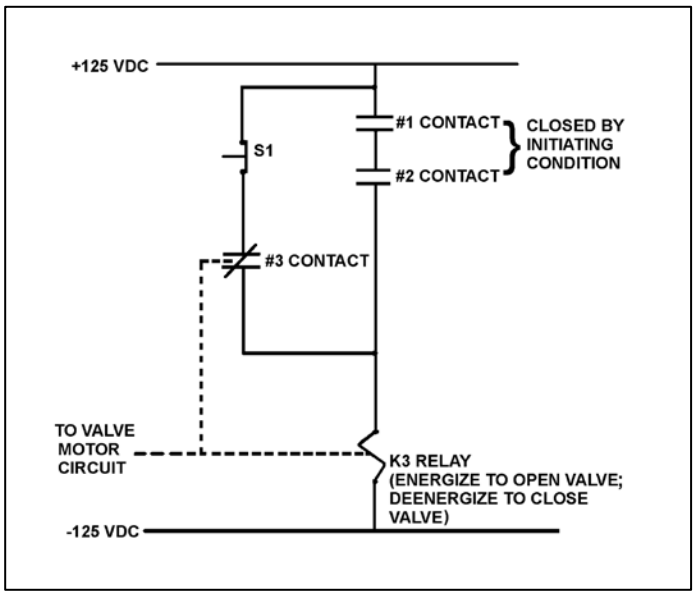

TOPIC: 291008
KNOWLEDGE: K1.06 [3.2/3.6]
QID: B942 (P941)

Refer to the drawing of a valve motor control circuit (see figure below).

Which one of the following describes the function of the #3 contact?

A. To keep the K3 relay energized after the initiating condition clears.

B. To provide a method for manually energizing the K3 relay.

C. To increase circuit reliability because any one of the three contacts can energize the K3 relay.

D. To ensure the K3 relay can always be deenergized even with the initiating condition present.

ANSWER: A.

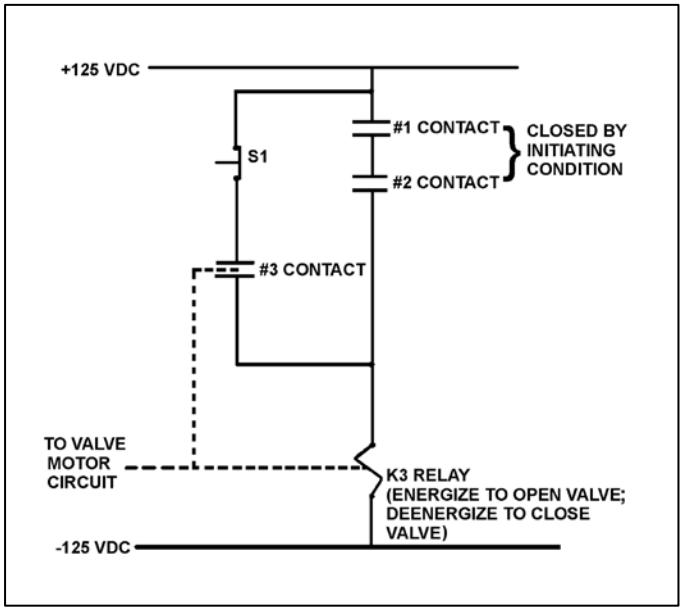

TOPIC: 291008
KNOWLEDGE: K1.06 [3.2/3.6]
QID: B1042 (P1040)

Refer to the drawing of a valve motor control circuit (see figure below).

The initiating condition occurs and closes the #1 and #2 contacts to energize the K3 relay and open the valve. Which one of the following will close the valve?

A. Loss of 125 VDC.

B. Both #1 and #2 contacts open.

C. Either #1 or #2 contact opens.

D. Depressing the S1 pushbutton with the initiating condition present.

ANSWER: A.

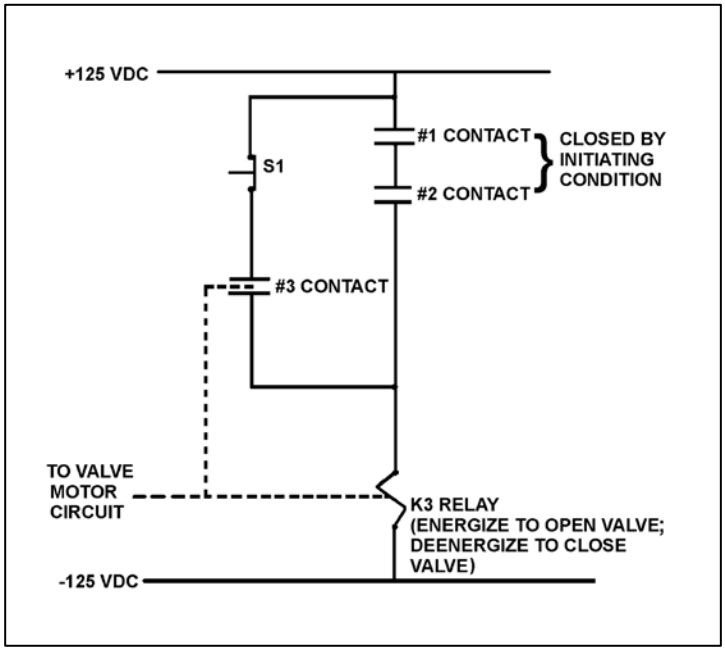

TOPIC: 291008
KNOWLEDGE: K1.06 [3.2/3.6]
QID: B1341 (P1340)

Refer to the drawing of a valve motor control circuit for a valve that is currently fully closed (see figure below).

Note: Limit switch (LS) contacts are shown open regardless of valve position, but relay contacts are shown open/closed according to the standard convention for control circuit drawings.

Which one of the following describes when the motor-operated valve will begin to stroke open?

A. At the same time the alarm actuates.

B. 10 seconds after PB2 is depressed.

C. Immediately after PB2 is depressed.

D. Immediately after PB1 is depressed if contact #1 is closed.

ANSWER: C.

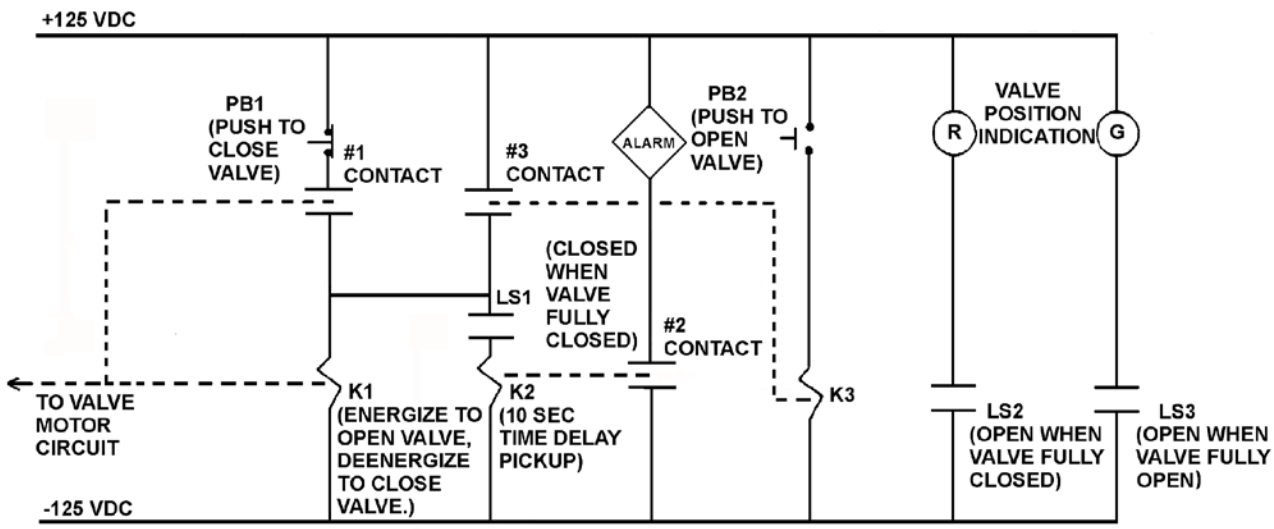

VALVE MOTOR CONTROL CIRCUIT

TOPIC: 291008
KNOWLEDGE: K1.06 [3.2/3.6]
QID: B1441 (P1440)

Refer to the drawing of a valve motor control circuit (see figure below).

Pushbutton PB2 was depressed to open the valve, and the current contact and pushbutton status is as shown with the following exceptions:

LS1 is closed.
LS3 is closed.
#1 contact is closed.
#2 contact is closed.

Which one of the following describes the condition of the valve and its control circuit?

A. The valve is closed and the valve motor circuit has just been energized to open the valve.

B. The valve is closed and an open demand signal has existed for at least 10 seconds.

C. The valve is partially open and the valve motor circuit is deenergized because PB2 was prematurely released.

D. The valve is partially open and an open demand signal has existed for at least 10 seconds.

ANSWER: B.

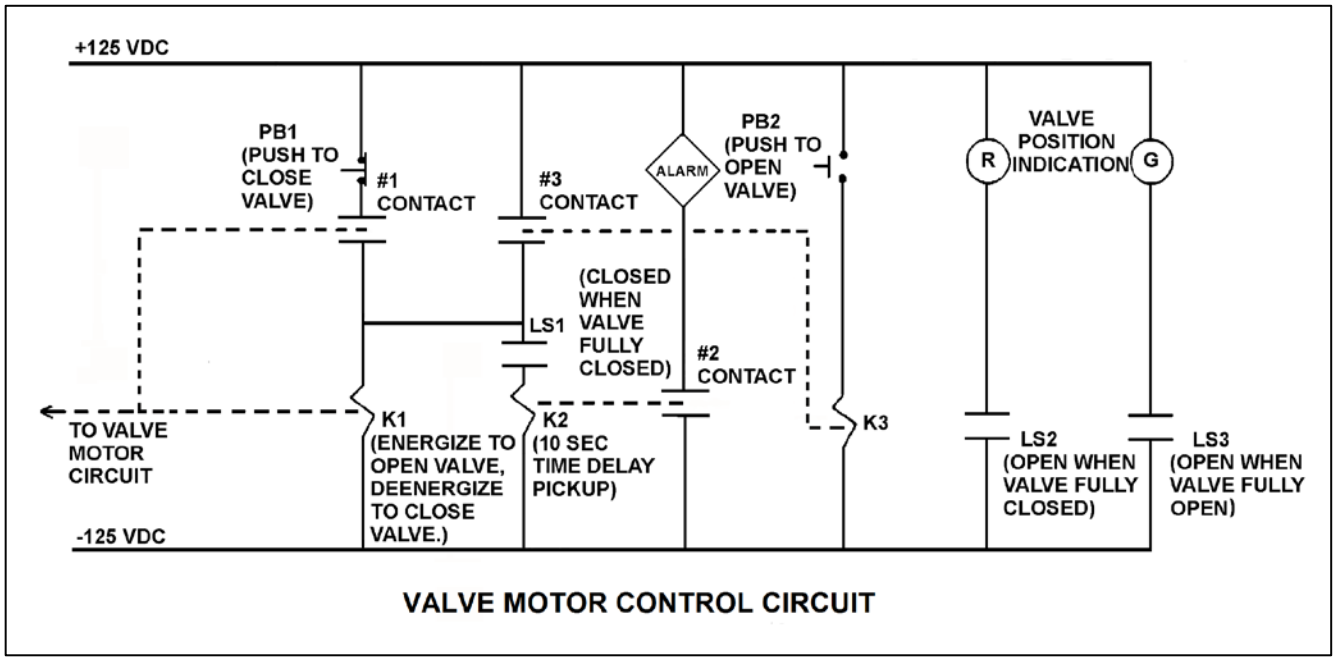

VALVE MOTOR CONTROL CIRCUIT

TOPIC: 291008
KNOWLEDGE: K1.06 [3.2/3.6]
QID: B1542 (P1540)

Refer to the drawing of a valve motor control circuit (see figure below).

Note: Limit switch (LS) contacts are shown open regardless of valve position, but relay contacts are shown open/closed according to the standard convention for control circuit drawings.

Which one of the following describes the purpose of the alarm?

A. Alert the operator when the valve motor circuit has been energized for 10 seconds after pushbutton PB2 is depressed.

B. Alert the operator when the valve has not moved off its closed seat within 10 seconds of depressing pushbutton PB2.

C. Alert the operator that the valve is opening by sounding the alarm for 10 seconds after PB2 is depressed.

D. Alert the operator if the valve has not reached full open within 10 seconds of depressing pushbutton PB2.

ANSWER: B.

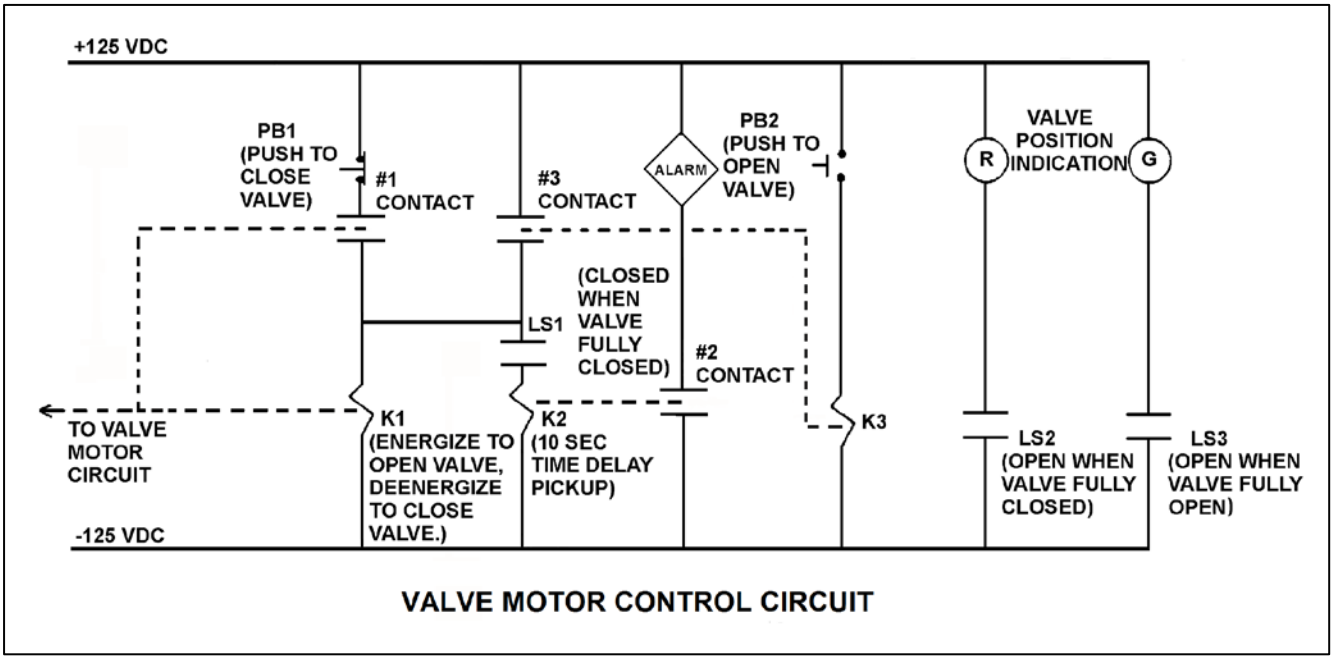

VALVE MOTOR CONTROL CIRCUIT

TOPIC: 291008
KNOWLEDGE: K1.06 [3.2/3.6]
QID: B1644 (P1640)

Refer to the drawing of a valve motor control circuit (see figure below).

Note: Limit switch (LS) contacts are shown open regardless of valve position, but relay contacts are shown open/closed according to the standard convention for control circuit drawings.

The valve is half open and moving to the open position. Which one of the following describes the current condition of the valve position indicating lights?

A. Red light on, green light on

B. Red light on, green light off

C. Red light off, green light on

D. Red light off, green light off

ANSWER: A.

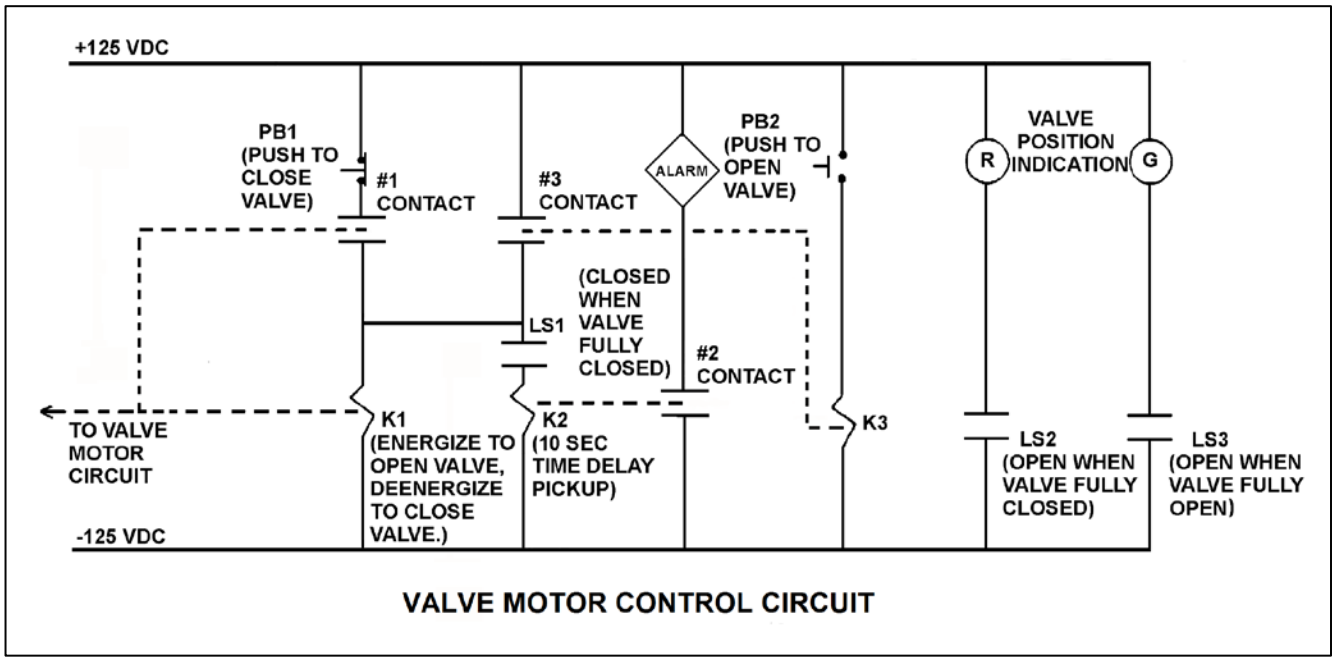

VALVE MOTOR CONTROL CIRCUIT

TOPIC: 291008
KNOWLEDGE: K1.06 [3.2/3.6]
QID: B1742 (P1739)

Refer to the drawing of a valve motor control circuit (see figure below).

Note: Limit switch (LS) contacts are shown open regardless of valve position, but relay contacts are shown open/closed according to the standard convention for control circuit drawings.

Pushbutton PB2 has been momentarily depressed and then released, and the valve is currently at mid-stroke and moving to the open position. Under these conditions, which one of the following describes the position of contacts #1, #2, and #3?

A. #1 closed; #2 open; #3 open

B. #1 open; #2 closed; #3 closed

C. #1 open; #2 closed; #3 open

D. #1 closed; #2 open; #3 closed

ANSWER: A.

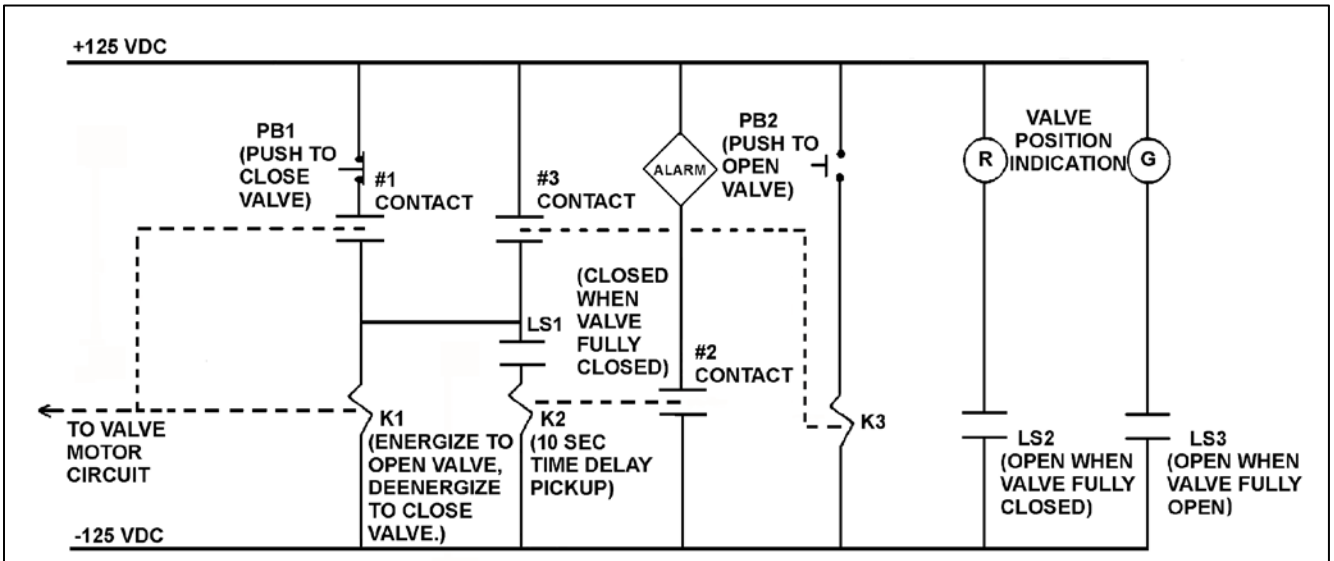

VALVE MOTOR CONTROL CIRCUIT

TOPIC: 291008
KNOWLEDGE: K1.06 [3.2/3.6]
QID: B2341 (P2239)

Refer to the drawing of a valve motor control circuit (see figure below) for a valve that is currently fully open and has a 10-second stroke time.

Note: Limit switch (LS) contacts are shown open regardless of valve position, but relay contacts are shown open/closed according to the standard convention for control circuit drawings.

Which one of the following describes the valve response if the control switch is taken to the CLOSE position for two seconds and then released?

A. The valve will not move.

B. The valve will close fully.

C. The valve will begin to close and then stop moving.

D. The valve will begin to close and then open fully.

ANSWER: C.

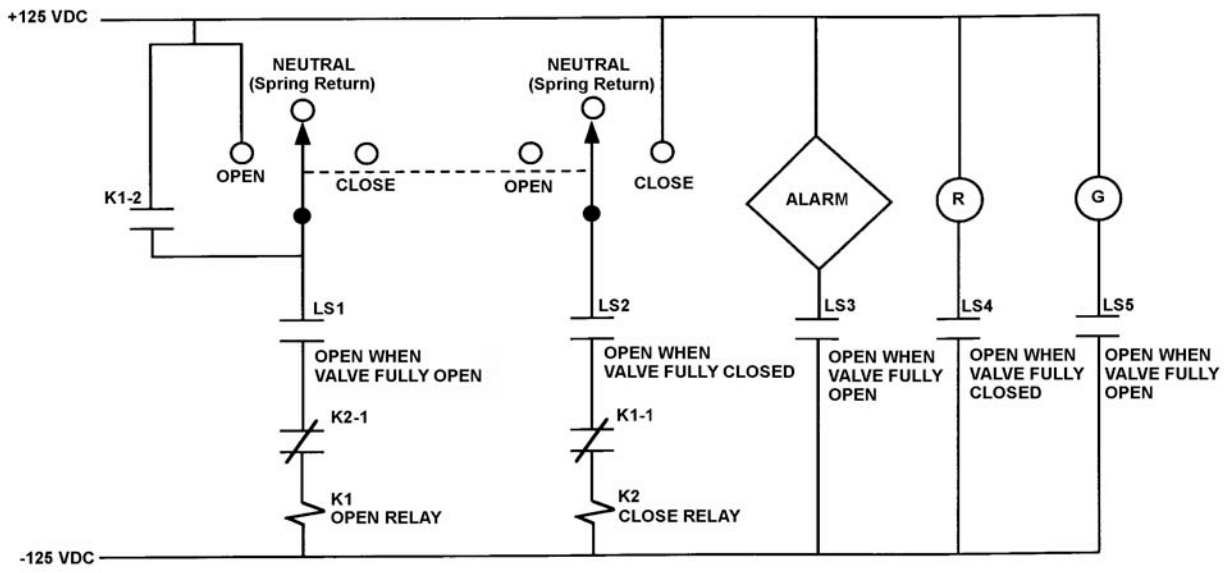

VALVE MOTOR CONTROL CIRCUIT

TOPIC: 291008
KNOWLEDGE: K1.06 [3.2/3.6]
QID: B2442 (P2341)

Refer to the drawing of a valve motor control circuit (see figure below) for a valve that is currently fully closed and has a 10-second stroke time.

Note: Limit switch (LS) contacts are shown open regardless of valve position, but relay contacts are shown open/closed according to the standard convention for control circuit drawings.

Which one of the following describes the valve response if the control switch is taken to the OPEN position for two seconds and then released?

A. The valve will not move.

B. The valve will open fully.

C. The valve will begin to open and then stop moving.

D. The valve will begin to open and then close fully.

ANSWER: B.

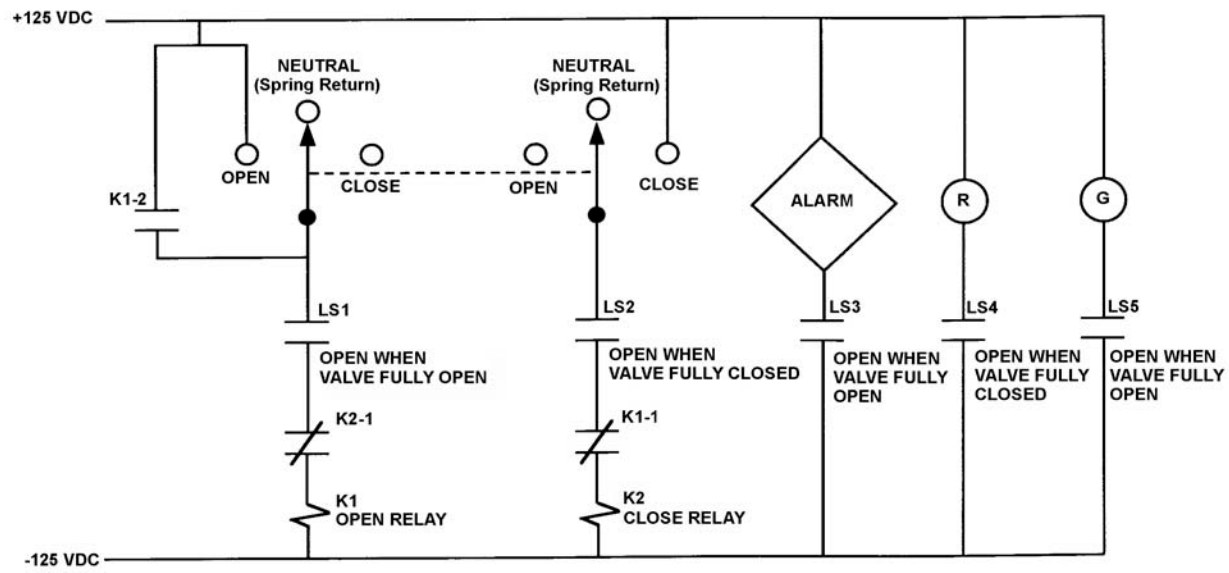

VALVE MOTOR CONTROL CIRCUIT

TOPIC: 291008
KNOWLEDGE: K1.06 [3.2/3.6]
QID: B2542 (P2539)

Refer to the drawing of a valve motor control circuit (see figure below) for a valve that is currently fully open and has a 10-second stroke time. Limit switch LS2 has failed open.

Note: Limit switch (LS) contacts are shown open regardless of valve position, but relay contacts are shown open/closed according to the standard convention for control circuit drawings.

Which one of the following describes the valve response if the control switch is taken to the CLOSE position for 2 seconds and then released?

A. The valve will not move.

B. The valve will close fully.

C. The valve will begin to close and then stop moving.

D. The valve will begin to close and then open fully.

ANSWER: A.

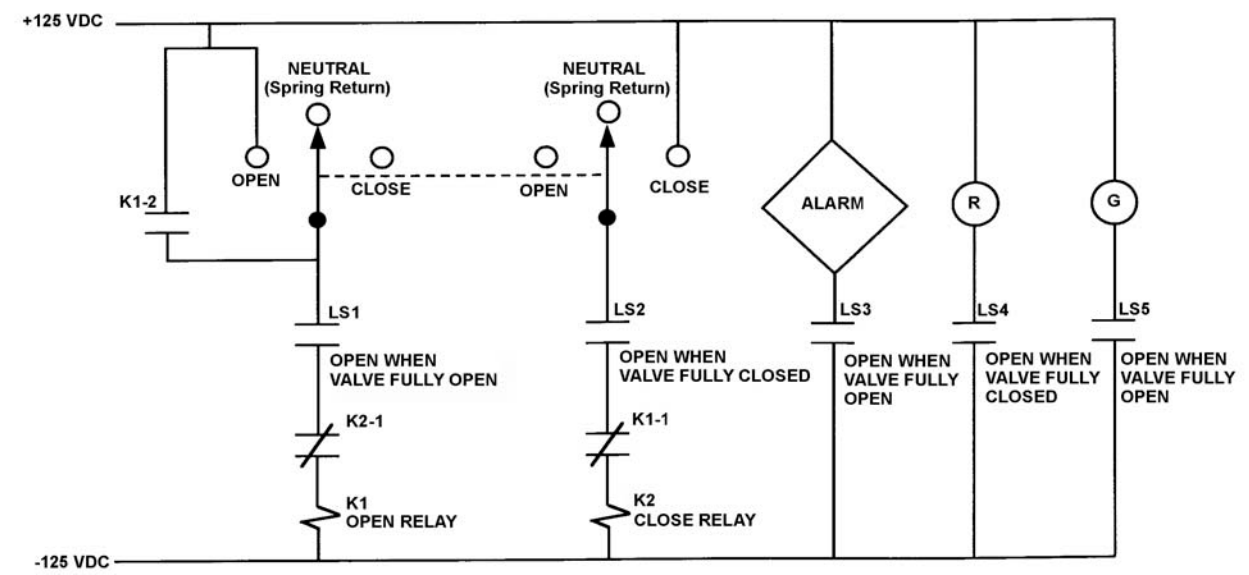

VALVE MOTOR CONTROL CIRCUIT

TOPIC: 291008
KNOWLEDGE: K1.06 [3.2/3.6]
QID: B2741 (P2739)

Refer to the drawing of a valve motor control circuit (see figure below) for a valve that is currently fully closed and has a 10-second stroke time.

Note: Limit switch (LS) contacts are shown open regardless of valve position, but relay contacts are shown open/closed according to the standard convention for control circuit drawings.

An operator takes the control switch to OPEN momentarily and the valve begins to open. Five seconds later, the operator places and holds the switch in the CLOSE position. Which one of the following describes the valve response with the switch held in the CLOSE position?

A. The valve will stop opening and remain partially open.

B. The valve will stop opening and then go fully closed.

C. The valve will open fully and remain fully open.

D. The valve will open fully and then go fully closed.

ANSWER: D.

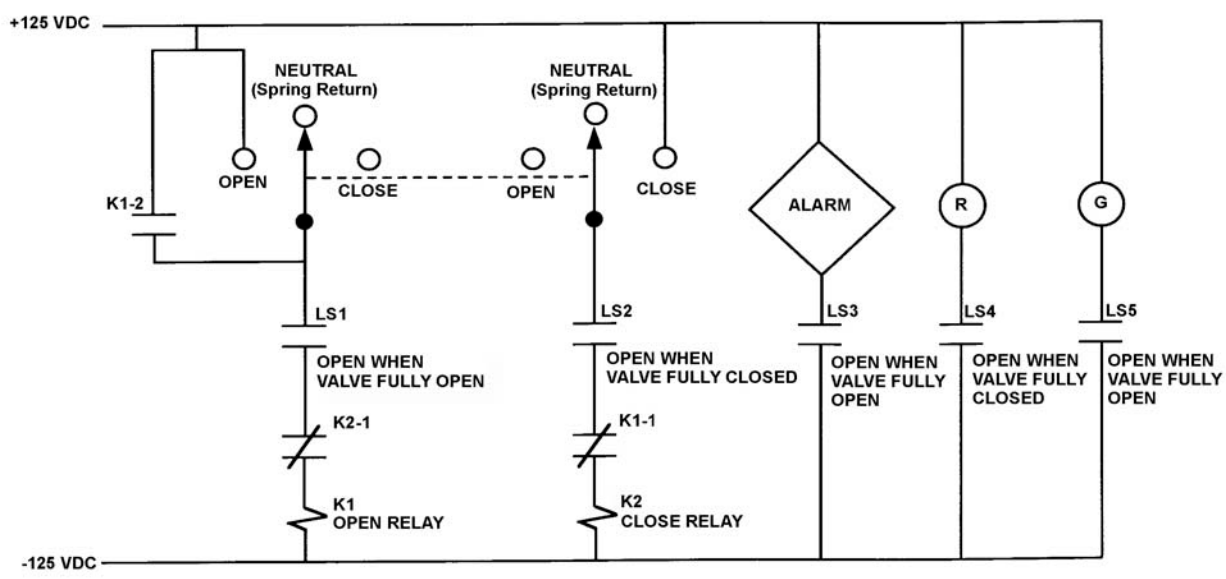

VALVE MOTOR CONTROL CIRCUIT

TOPIC: 291008
KNOWLEDGE: K1.06 [3.2/3.6]
QID: B2841 (P2640)

Refer to the drawing of a valve motor control circuit (see figure below) for a valve that is currently fully closed and has a 10-second stroke time.

Note: Limit switch (LS) contacts are shown open regardless of valve position, but relay contacts are shown open/closed according to the standard convention for control circuit drawings.

The operator takes the control switch to OPEN momentarily and the valve begins to open. Five seconds later, the operator takes the switch to CLOSE momentarily and then releases the switch. Which one of the following describes the valve response after the switch is released?

A. The valve will stop opening and remain partially open.

B. The valve will stop opening and then go fully closed.

C. The valve will open fully and remain fully open.

D. The valve will open fully and then go fully closed.

ANSWER: C.

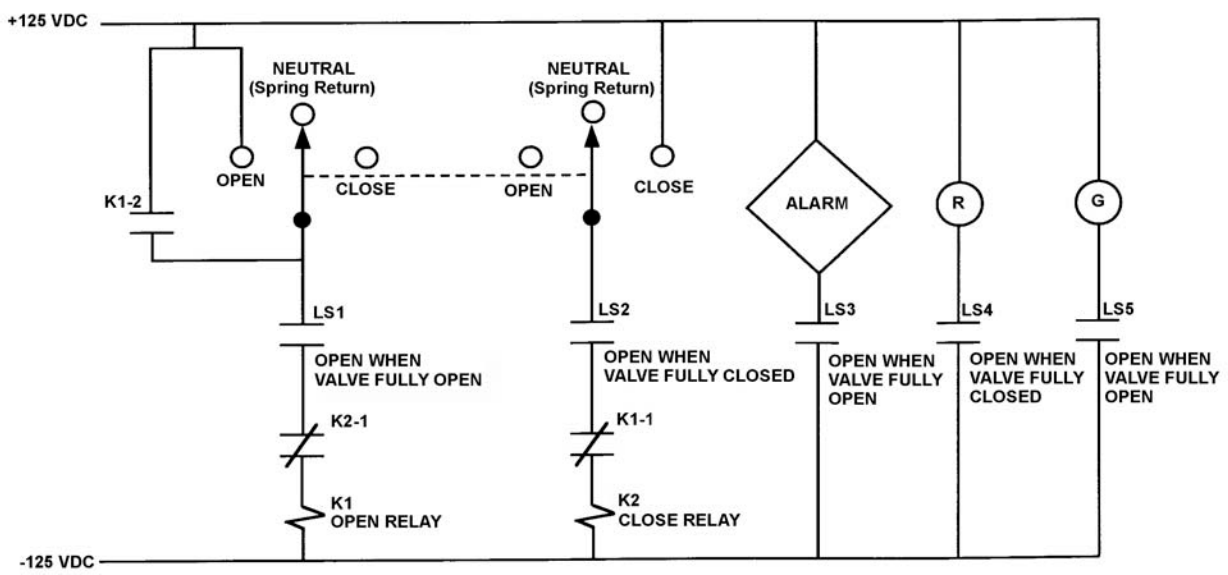

VALVE MOTOR CONTROL CIRCUIT

TOPIC: 291008
KNOWLEDGE: K1.06 [3.2/3.6]
QID: B2940 (P2942)

Refer to the drawing of a motor and its control circuit (see figure below).

Note: Relay contacts are shown open/closed according to the standard convention for control circuit drawings.

What is the purpose of the Time Delay Coil (TD) in the motor controller circuit?

A. Ensures the motor cannot be started until the overload relays are reset.

B. Ensures the motor cannot be started until the accelerating coil is energized.

C. Allows the motor to come up to speed before bypassing the starting resistors.

D. Allows the motor to come up to speed before placing the starting resistors in the circuit.

ANSWER: C.

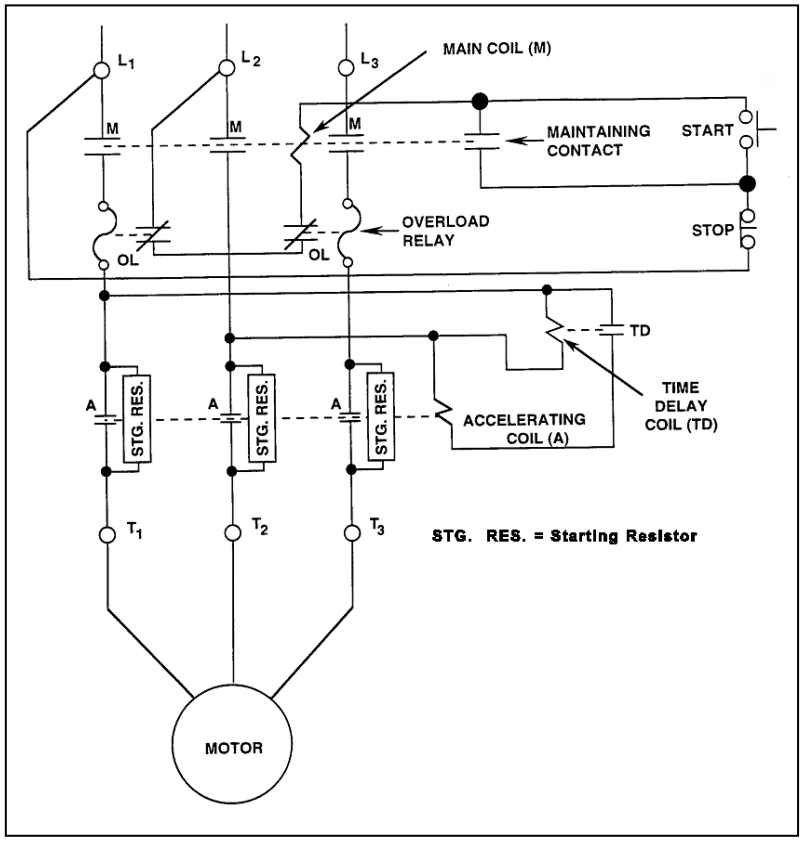

TOPIC: 291008
KNOWLEDGE: K1.06 [3.2/3.6]
QID: B3641 (P3640)

Refer to the drawing of a motor and its control circuit (see figure below).

Note: Relay contacts are shown open/closed according to the standard convention for control circuit drawings.

The motor receives overload protection from _____ overload relays; and _____ overload relay(s) must actuate to deenergize the motor.

A. two; one

B. two; two

C. three; one

D. three; two

ANSWER: A.

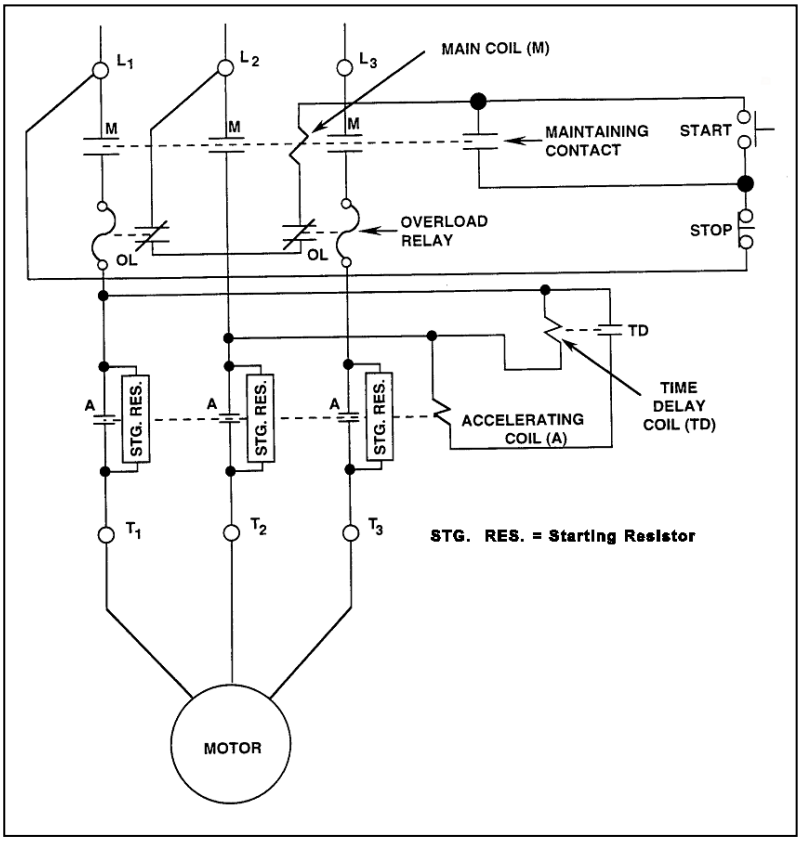

TOPIC: 291008
KNOWLEDGE: K1.06 [3.2/3.6]
QID: B3921 (P3921)

Refer to the drawing of a valve motor control circuit (see figure below) for a valve that is currently fully closed and has a 10-second stroke time.

Note: Limit switch (LS) contacts are shown open regardless of valve position, but relay contacts are shown open/closed according to the standard convention for control circuit drawings.

The operator takes the control switch to OPEN for 5 seconds and then releases the switch. After one minute, the operator takes the control switch to CLOSE for 5 seconds and then releases the switch. Which one of the following describes the valve position immediately after the control switch is released the second time?

A. Approximately fully open.

B. Approximately fully closed.

C. Approximately 50 percent open.

D. Cannot be determined without additional information.

ANSWER: B.

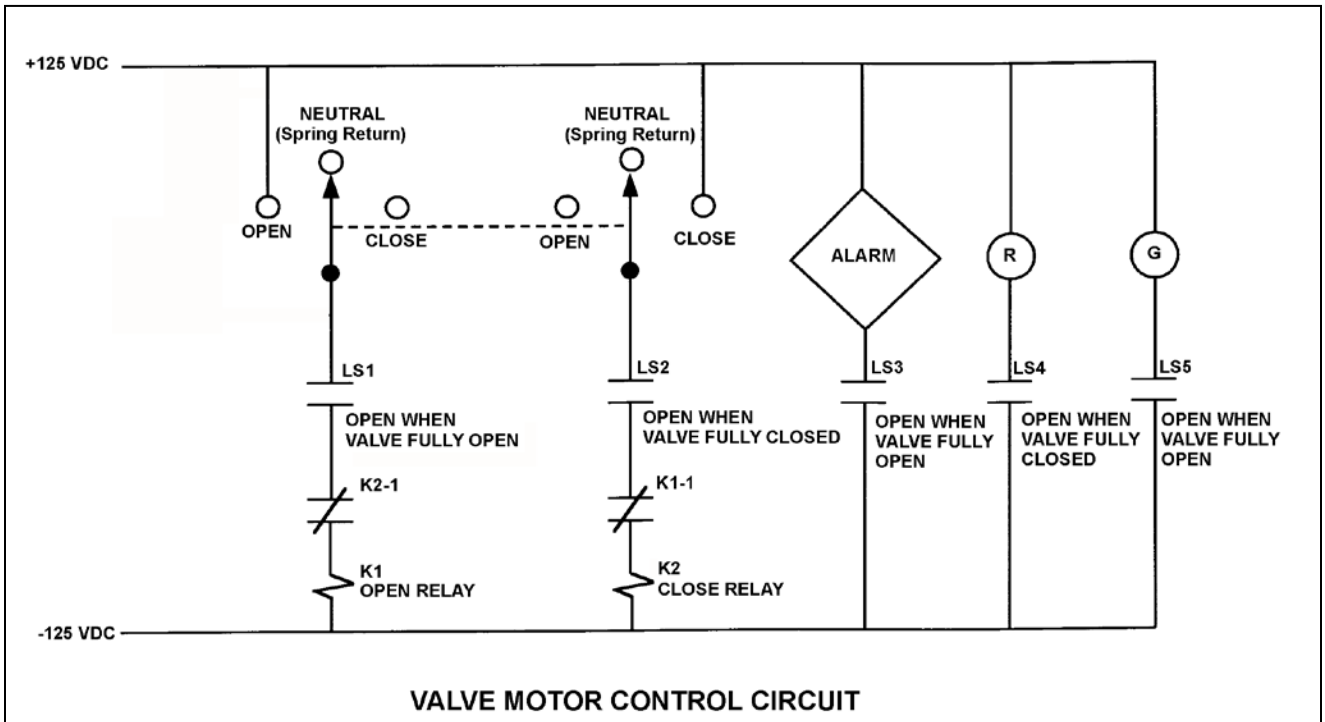

VALVE MOTOR CONTROL CIRCUIT

TOPIC: 291008
KNOWLEDGE: K1.06 [3.2/3.6]
QID: B4221 (P4221)

Refer to the drawing of a motor and its control circuit (see figure below).

Note: Relay contacts are shown open/closed according to the standard convention for control circuit drawings.

How are the starting resistors employed before and after the motor is energized?

A. Inserted before the motor is energized; simultaneously bypassed after the motor gains speed.

B. Inserted before the motor is energized; sequentially bypassed as the motor gains speed.

C. Bypassed before the motor is energized; simultaneously inserted after the motor gains speed.

D. Bypassed before the motor is energized; sequentially inserted as the motor gains speed.

ANSWER: A.

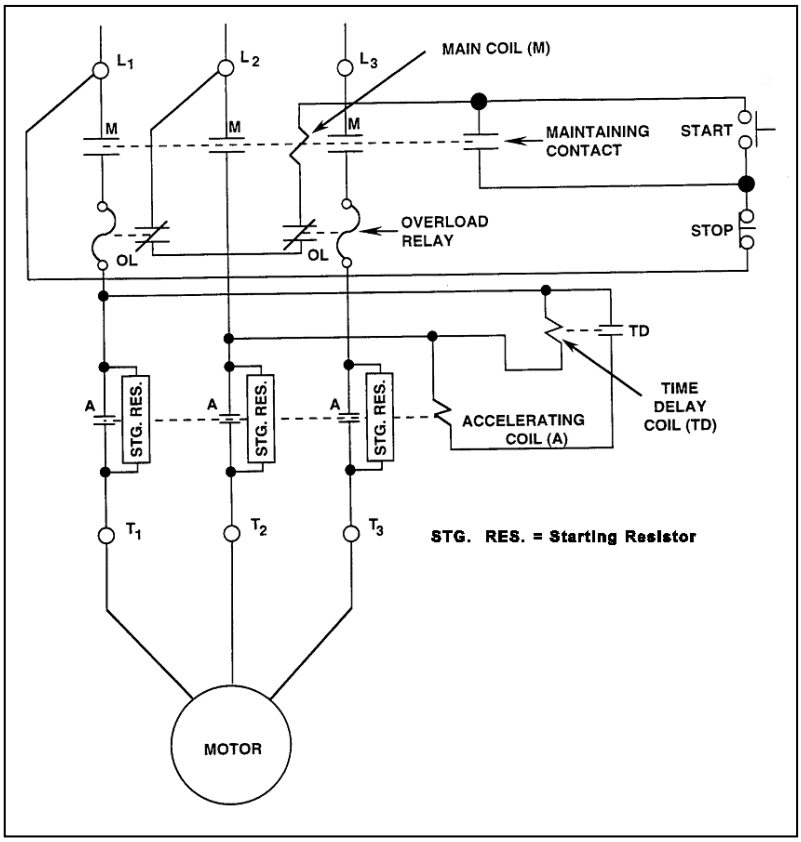

TOPIC: 291008
KNOWLEDGE: K1.06 [3.2/3.6]
QID: B4421 (P4421)

Refer to the drawing of a motor and its control circuit (see figure below).

Note: Relay contacts are shown open/closed according to the standard convention for control circuit drawings.

The motor has been operating for several hours when it is decided to stop the motor. What is the status of the starting resistors before and after the motor STOP pushbutton is depressed?

A. Initially inserted in the motor circuit; bypassed immediately after the STOP pushbutton is depressed.

B. Initially inserted in the motor circuit; bypassed following a preset time delay after the STOP pushbutton is depressed.

C. Initially bypassed; bypass is removed immediately after the STOP pushbutton is depressed.

D. Initially bypassed; bypass is removed following a preset time delay after the STOP pushbutton is depressed.

ANSWER: C.

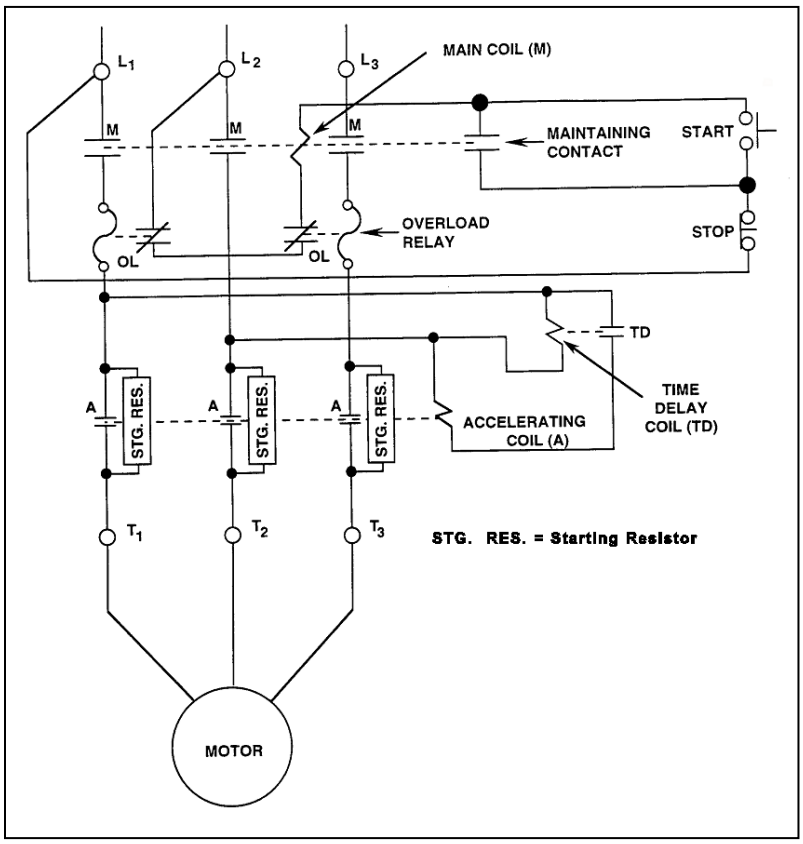

TOPIC: 291008
KNOWLEDGE: K1.06 [3.2/3.6]
QID: B4521 (P4521)

Refer to the drawing of a valve motor control circuit (see figure below) for a valve that is currently fully closed and has a 10-second stroke time.

Note: Limit switch (LS) contacts are shown open regardless of valve position, but relay contacts are shown open/closed according to the standard convention for control circuit drawings.

Which one of the following describes the valve response if the control switch is taken to the OPEN position for two seconds and then released?

A. The valve will not move.

B. The valve will open fully.

C. The valve will begin to open and then stop moving.

D. The valve will begin to open and then close fully.

ANSWER: C.

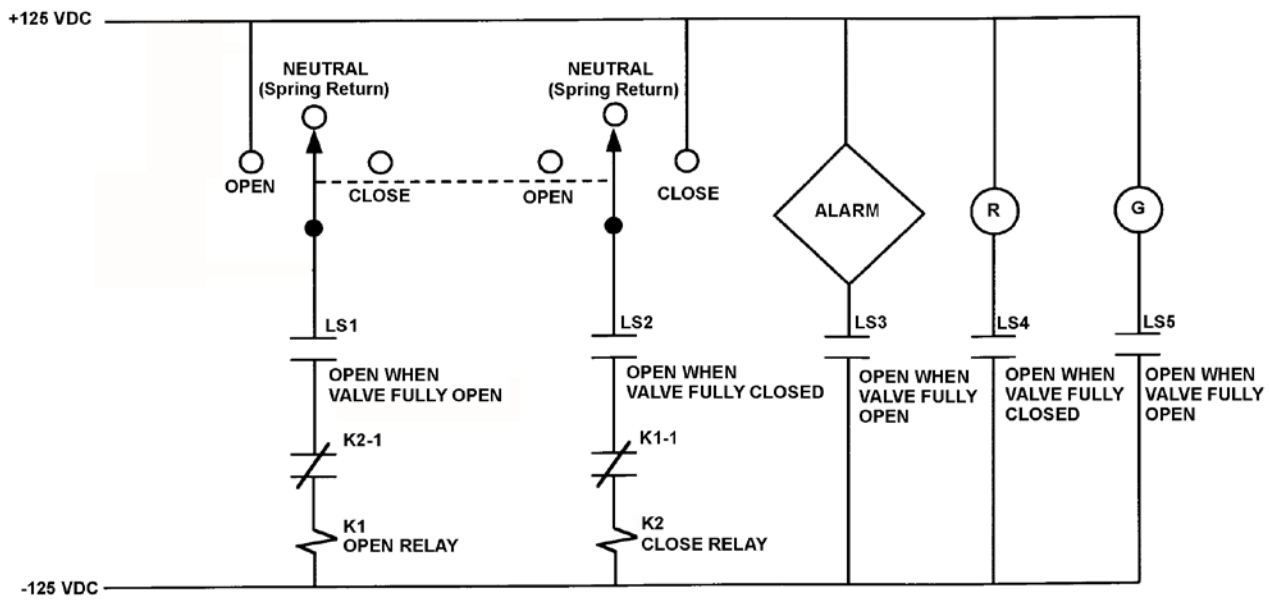

VALVE MOTOR CONTROL CIRCUIT

TOPIC: 291008
KNOWLEDGE: K1.06 [3.2/3.6]
QID: B5022 (P1239)

Refer to the drawing of a valve motor control circuit (see figure below).

Note: Limit switch (LS) contacts are shown open regardless of valve position, but relay contacts are shown open/closed according to the standard convention for control circuit drawings.

If the valve is currently closed, when will the alarm actuate?

A. As soon as PB2 is pushed.

B. Ten seconds after PB2 is pushed if the valve is still closed.

C. Immediately upon pushing PB2 and for the next 10 seconds if the valve remains closed.

D. Ten seconds after PB2 is pushed if the valve is still stroking open.

ANSWER: B.

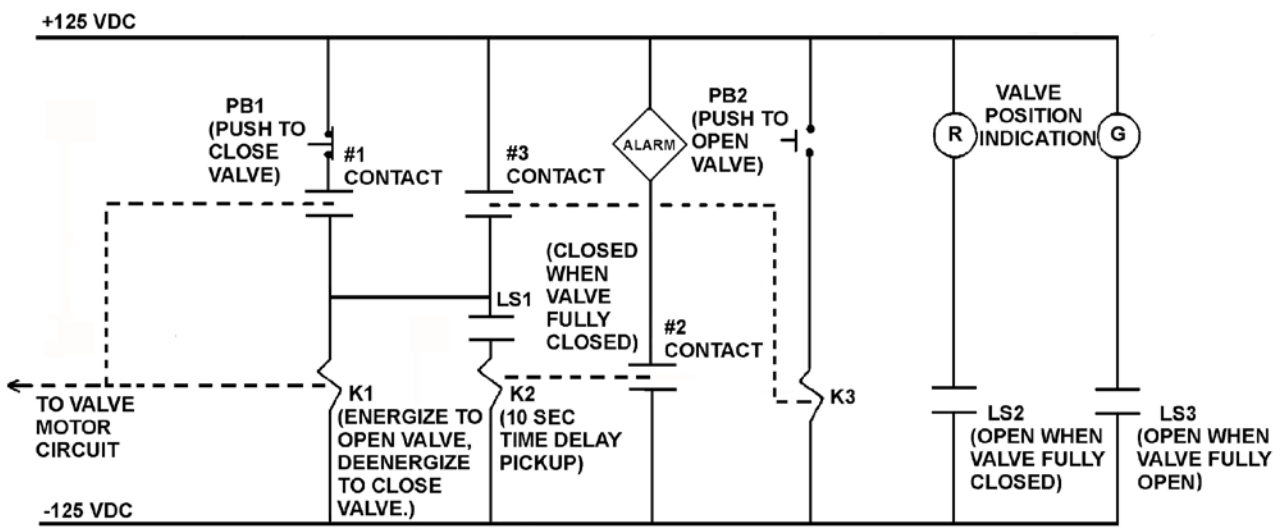

VALVE MOTOR CONTROL CIRCUIT

TOPIC: 291008
KNOWLEDGE: K1.06 [3.2/3.6]
QID: B5121 (P5120)

Refer to the drawing of a motor and its control circuit (see figure below).

Note: Relay contacts are shown open/closed according to the standard convention for control circuit drawings.

The motor has been idle for several days when it is decided to start the motor. What is the status of the starting resistors before and after the motor START pushbutton is depressed?

A. Initially bypassed; bypass is removed immediately after the START pushbutton is depressed.

B. Initially bypassed; bypass is removed following a preset time delay after the START pushbutton is depressed.

C. Initially inserted in the motor circuit; bypassed immediately after the START pushbutton is depressed.

D. Initially inserted in the motor circuit; bypassed following a preset time delay after the START pushbutton is depressed.

ANSWER: D.

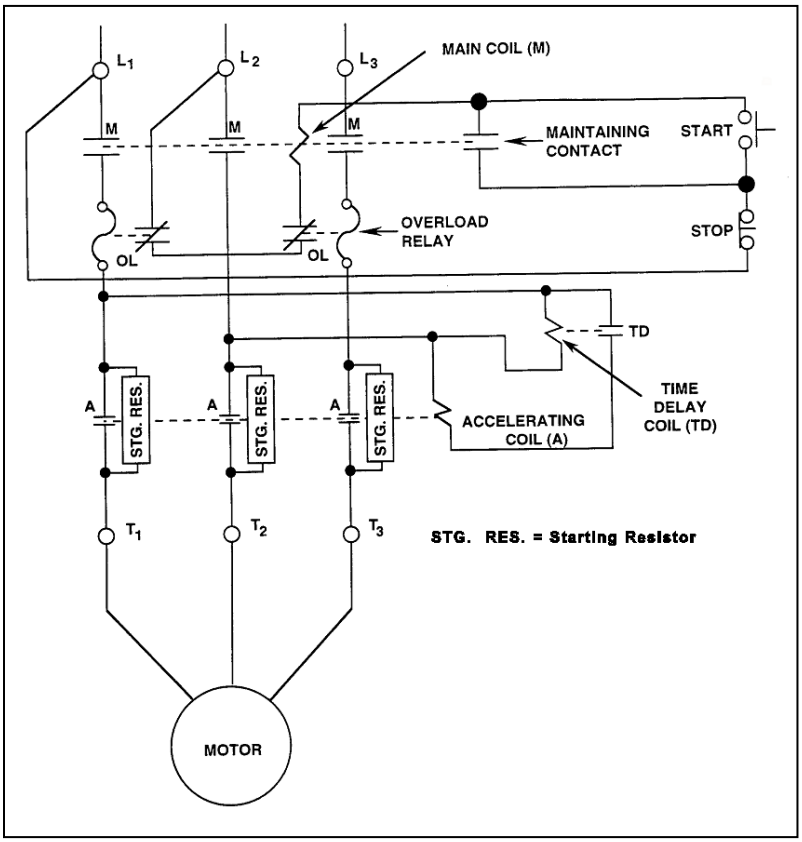

TOPIC: 291008
KNOWLEDGE: K1.06 [3.2/3.6]
QID: B5222 (P5221)

Refer to the drawing of a valve motor control circuit (see figure below) for a valve that is currently fully open and has a 10-second stroke time.

Note: Limit switch (LS) contacts are shown open regardless of valve position, but relay contacts are shown open/closed according to the standard convention for control circuit drawings.

The operator takes the control switch to CLOSE. Two seconds later, after verifying the valve is closing, the operator releases the control switch. Which one of the following describes the valve motor control circuit alarm response after the switch is released?

A. The alarm will continue to actuate for approximately 8 seconds.

B. The alarm will continue to actuate until additional operator action is taken.

C. The alarm will actuate after approximately 8 seconds.

D. The alarm will <u>not</u> actuate until additional operator action is taken.

ANSWER: B.

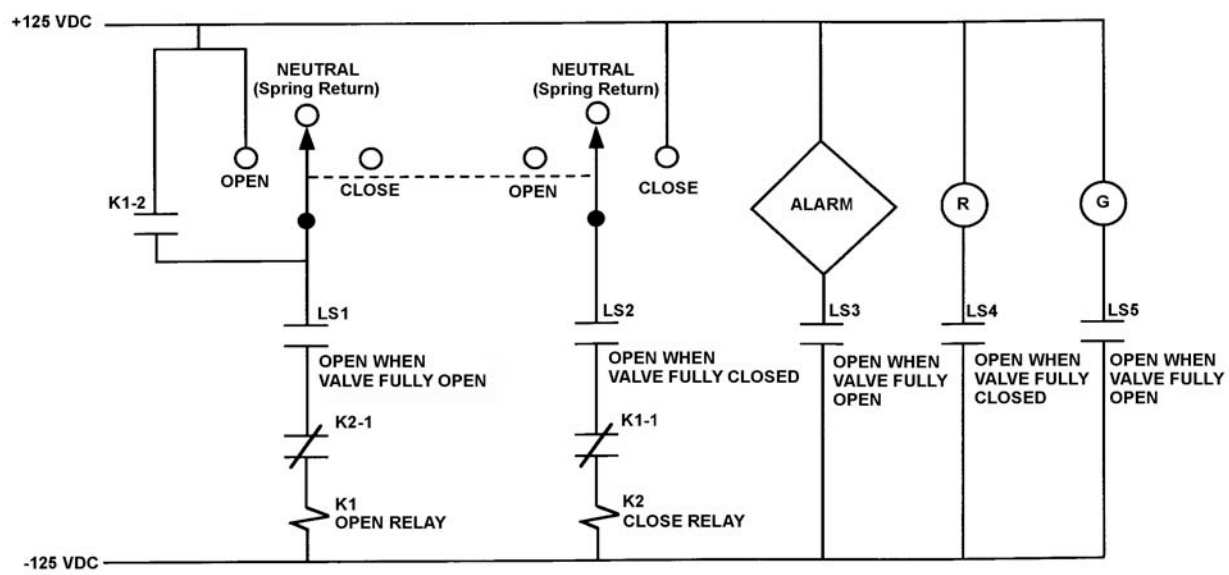

VALVE MOTOR CONTROL CIRCUIT

TOPIC: 291008
KNOWLEDGE: K1.06 [3.2/3.6]
QID: B5421 (P5421)

Refer to the drawing of a valve motor control circuit (see figure below).

Note: Limit switch (LS) contacts are shown open regardless of valve position, but relay contacts are shown open/closed according to the standard convention for control circuit drawings.

Which one of the following will actuate the alarm?

A. With the valve partially closed, the control switch is taken to the CLOSE position.

B. With the valve partially closed, the control switch is taken to the OPEN position.

C. With the valve fully open, the control switch is taken to the CLOSE position.

D. With the valve fully open, the control switch is taken to the OPEN position.

ANSWER: B.

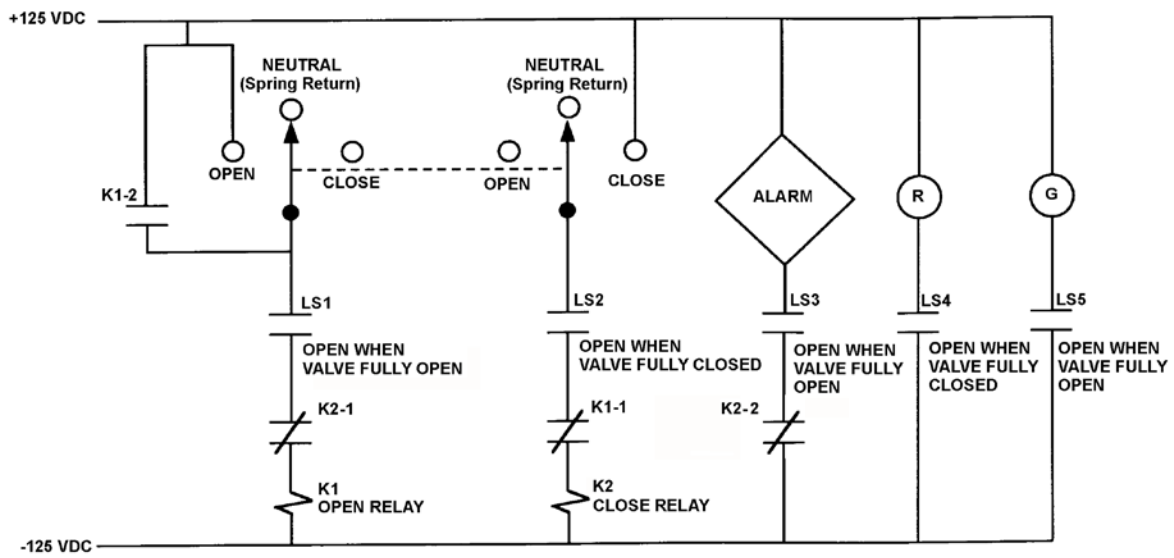

VALVE MOTOR CONTROL CIRCUIT

TOPIC: 291008
KNOWLEDGE: K1.06 [3.2/3.6]
QID: B5922 (P5920)

Refer to the drawing of a valve motor control circuit (see figure below) for a valve that is currently fully open and has a 10-second stroke time.

Note: Limit switch (LS) contacts are shown open regardless of valve position, but relay contacts are shown open/closed according to the standard convention for control circuit drawings.

The operator takes the control switch to CLOSE momentarily and the valve begins to close. Five seconds later, the operator takes the switch to OPEN momentarily and then releases the switch. Which one of the following describes the valve response after the switch is released?

A. The valve will stop closing and remain partially open.

B. The valve will stop closing and then go fully open.

C. The valve will close fully and remain fully closed.

D. The valve will close fully and then go fully open.

ANSWER: C.

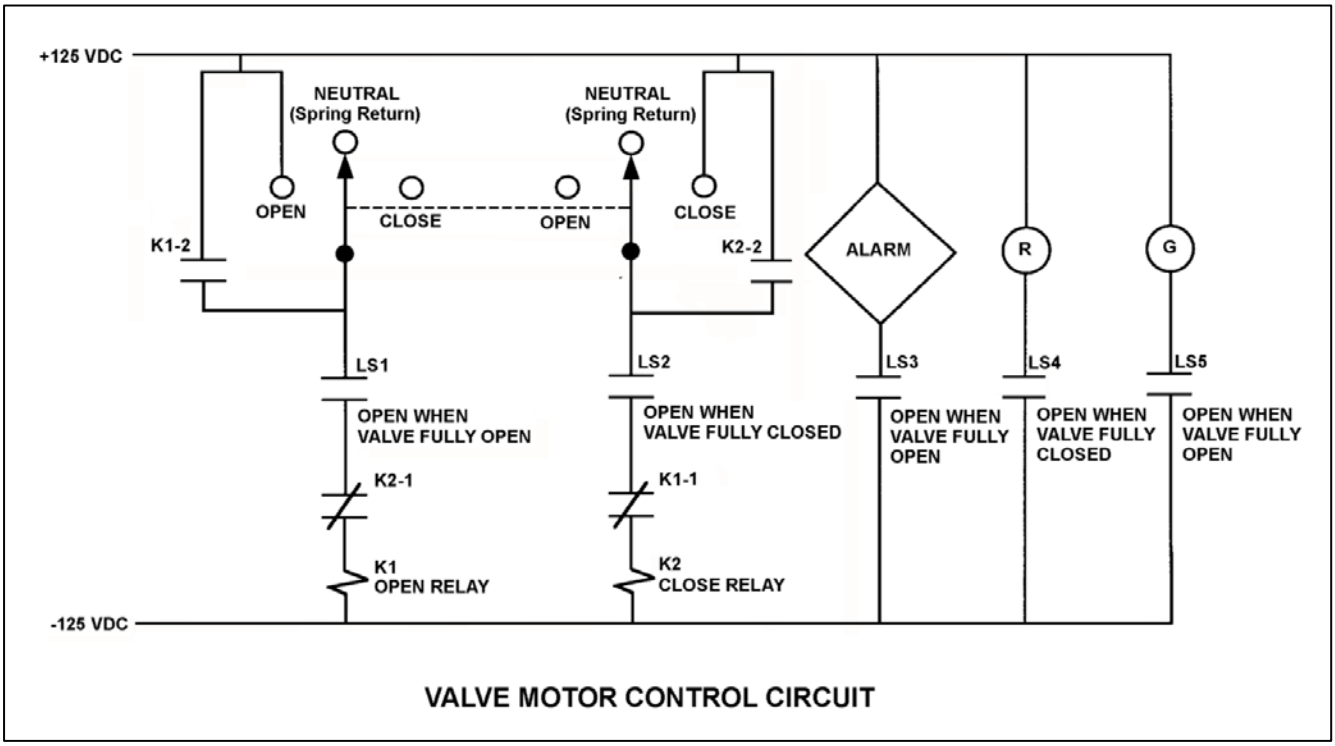

VALVE MOTOR CONTROL CIRCUIT

TOPIC: 291008
KNOWLEDGE: K1.06 [3.2/3.6]
QID: B6822 (P6820)

Refer to the drawing of a valve motor control circuit (see figure below) for a valve that is currently fully closed and has a 10-second stroke time.

Note: Limit switch (LS) contacts are shown open regardless of valve position, but relay contacts are shown open/closed according to the standard convention for control circuit drawings.

An operator takes the control switch to OPEN momentarily and the valve begins to open. Five seconds later, the operator takes the control switch to CLOSE momentarily and releases the switch. Which one of the following describes the valve response when the control switch is taken to CLOSE momentarily and released?

A. The valve will stop opening and remain partially open.

B. The valve will stop opening and then go fully closed.

C. The valve will open fully and remain fully open.

D. The valve will open fully and then go fully closed.

ANSWER: A.

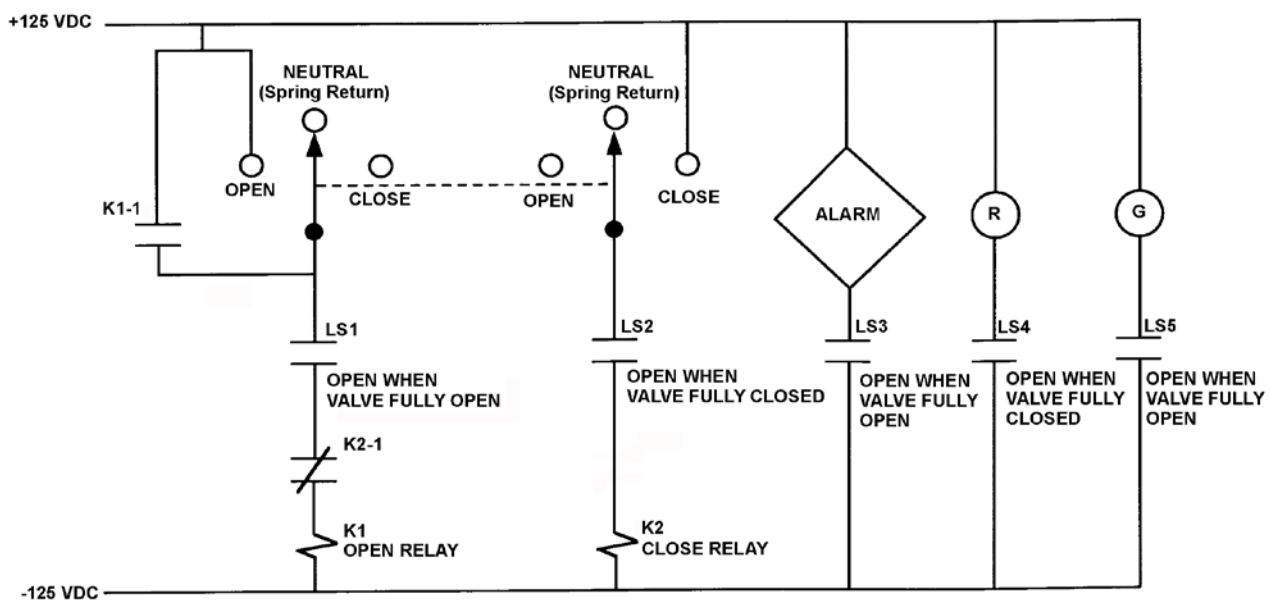

VALVE MOTOR CONTROL CIRCUIT

TOPIC: 291008
KNOWLEDGE: K1.06 [3.2/3.6]
QID: B7121 (P7122)

Refer to the drawing of a valve motor control circuit (see figure below) for a valve that is currently fully closed and has a 10-second stroke time.

Note: Limit switch (LS) contacts are shown open regardless of valve position, but relay contacts are shown open/closed according to the standard convention for control circuit drawings.

The operator takes the control switch to OPEN momentarily and the valve begins to open. Five seconds later, the operator takes the switch to CLOSE momentarily and then releases the switch. Which one of the following describes the valve response after the switch is released?

A. The valve will stop opening and remain partially open.

B. The valve will stop opening and then go fully closed.

C. The valve will open fully and remain fully open.

D. The valve will open fully and then go fully closed.

ANSWER: C.

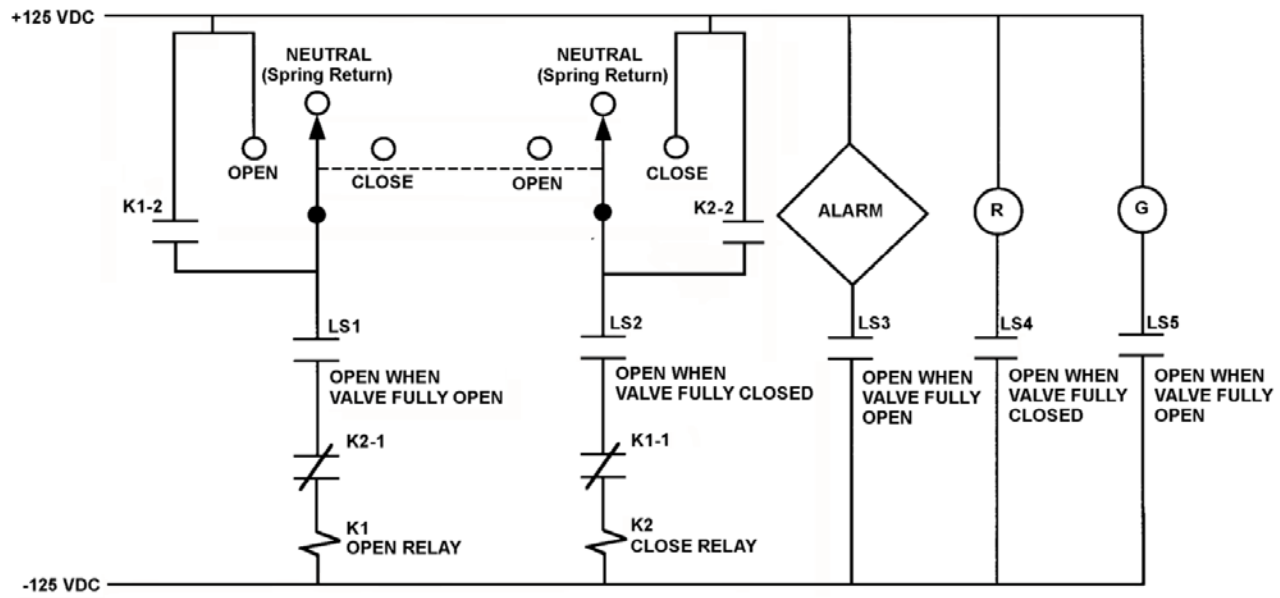

VALVE MOTOR CONTROL CIRCUIT

TOPIC: 291008
KNOWLEDGE: K1.06 [3.2/3.6]
QID: B7421 (P7421)

Refer to the drawing of a valve motor control circuit (see figure below) for a valve that is currently fully open and has a 10-second stroke time.

Note: Limit switch (LS) contacts are shown open regardless of valve position, but relay contacts are shown open/closed according to the standard convention for control circuit drawings.

The operator takes the control switch to CLOSE. Two seconds later, after verifying the valve is closing, the operator releases the control switch. Which one of the following describes the valve motor control circuit alarm response after the switch is released?

A. The alarm will continue to actuate for approximately 8 seconds.

B. The alarm will continue to actuate until additional operator action is taken.

C. The alarm will actuate after approximately 8 seconds.

D. The alarm will <u>not</u> actuate until additional operator action is taken.

ANSWER: A.

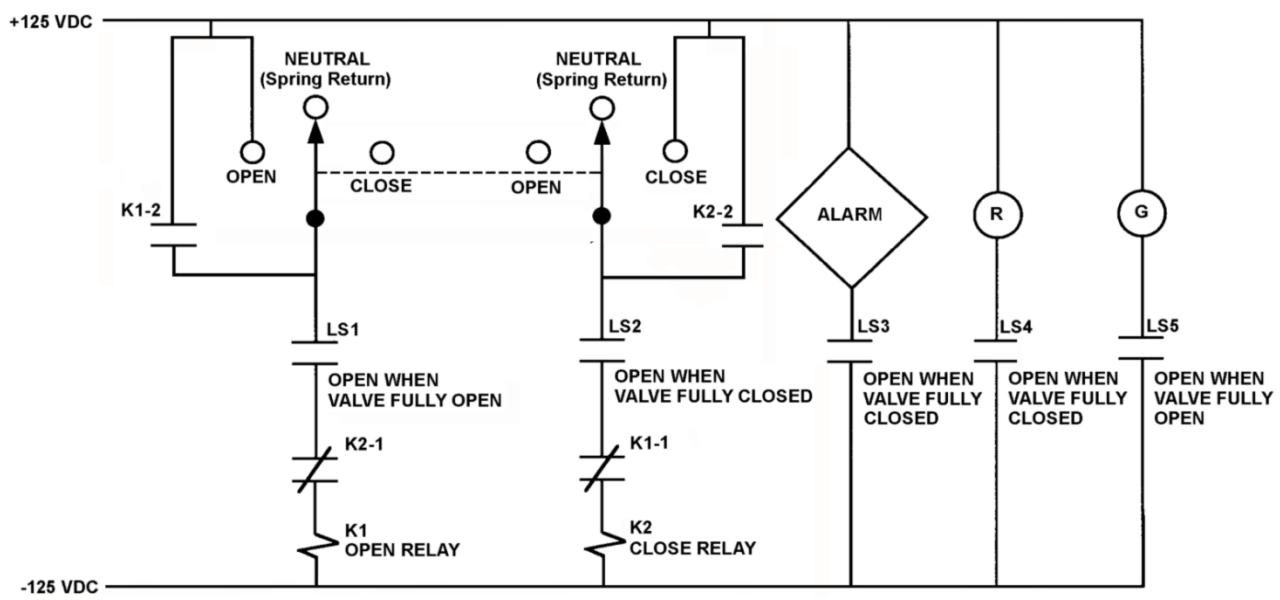

VALVE MOTOR CONTROL CIRCUIT

TOPIC: 291008
KNOWLEDGE: K1.07 [3.5/3.7]
QID: B42

An operator should never open or close a high voltage (greater than 750 VAC) air break disconnect unless...

A. a parallel path exists for current flow.

B. the circuit it is in is already deenergized.

C. the current flowing through it is approximately zero.

D. the current flowing through it is less than its design current carrying capability.

ANSWER: B.

TOPIC: 291008
KNOWLEDGE: K1.07 [3.5/3.7]
QID: B242

The function of high voltage electrical disconnects is to...

A. isolate equipment electrically during no-load conditions.

B. isolate equipment electrically during overload conditions.

C. protect circuits during overcurrent conditions.

D. protect circuits during undervoltage conditions.

ANSWER: A.

TOPIC: 291008
KNOWLEDGE: K1.07 [3.5/3.7]
QID: B842 (P1241)

A 480 VAC motor is supplied power via an electrical disconnect in series with a circuit breaker. Which one of the following describes the proper operations to isolate power to the motor?

A. Open the disconnect first, then the breaker.

B. Open the breaker first, then the disconnect.

C. Open the device that is closest to the motor first.

D. Open the device that is closest to the power source first.

ANSWER: B.

TOPIC: 291008
KNOWLEDGE: K1.07 [3.5/3.7]
QID: B1142 (P1141)

Which one of the following is an <u>unsafe</u> practice if performed while working on or near energized electrical equipment?

A. Using two hands for balance and to prevent dropping tools onto energized equipment.

B. Standing on insulating rubber material to increase the electrical resistance of the body to ground.

C. Having a person stand by to deenergize the equipment in the event of an emergency.

D. Covering exposed energized circuits with insulating material to prevent inadvertent contact.

ANSWER: A.

TOPIC: 291008
KNOWLEDGE: K1.07 [3.5/3.7]
QID: B3141 (P2940)

Which one of the following is an unsafe practice if performed while working on or near energized electrical equipment?

A. Use insulated tools to prevent inadvertent contact with adjacent equipment.

B. Cover exposed energized circuits with insulating material to prevent inadvertent contact.

C. Attach a metal strap from your body to a nearby neutral ground to ensure that you are grounded.

D. Have a person standing by with the ability to remove you from the equipment in the event of an emergency.

ANSWER: C.

TOPIC: 291008
KNOWLEDGE: K1.08 [3.4/3.5]
QID: B43 (P1839)

A main generator is being connected to an infinite power grid. Which one of the following will occur if the generator output breaker is closed with generator frequency 0.1 Hz lower than power grid frequency? (Assume that no generator protection relay actuates.)

A. The generator will motorize.

B. The generator will accept too much load.

C. The voltage of the generator will decrease to compensate for the lower frequency.

D. The entire connected system will operate at the frequency of the lowest frequency (the oncoming) generator.

ANSWER: A.

TOPIC: 291008
KNOWLEDGE: K1.08 [3.4/3.5]
QID: B122 (P107)

Closing the output breaker of a three-phase generator onto a deenergized bus can...

A. produce an overvoltage condition on the bus.

B. produce an overcurrent condition on the generator if the bus was not first unloaded.

C. result in a reverse power trip of the generator circuit breaker if generator frequency is low.

D. result in large reactive currents in the generator.

ANSWER: B.

TOPIC: 291008
KNOWLEDGE: K1.08 [3.4/3.5]
QID: B243 (P242)

Which one of the following generator conditions is most likely to result in equipment damage from high current flow?

A. Tripping the output breaker under full-load conditions.

B. Tripping the generator prime mover under full-load conditions.

C. Closing the output breaker onto a bus that has a short-circuit fault.

D. Closing the output breaker onto a bus that has an open-circuit fault.

ANSWER: C.

TOPIC: 291008
KNOWLEDGE: K1.08 [3.4/3.5]
QID: B342 (P41)

The primary reason for isolating emergency electrical loads from their power supply bus prior to energizing the bus via the emergency diesel generator is to prevent an...

A. overcurrent condition on the generator.

B. overcurrent condition on the loads.

C. underfrequency condition on the generator.

D. underfrequency condition on the loads.

ANSWER: A.

TOPIC: 291008
KNOWLEDGE: K1.08 [3.4/3.5]
QID: B343 (P341)

A main generator is being paralleled to the power grid. Generator voltage has been properly adjusted and the synchroscope is rotating slowly in the clockwise direction.

The generator breaker must be closed just as the synchroscope pointer reaches the 12 o'clock position to prevent...

A. motoring of the generator, due to unequal frequencies.

B. excessive MW load transfer to the generator, due to unequal frequencies.

C. excessive MW load transfer to the generator, due to out-of-phase voltages.

D. excessive arcing within the generator output breaker, due to out-of-phase voltages.

ANSWER: D.

TOPIC: 291008
KNOWLEDGE: K1.08 [3.4/3.5]
QID: B440 (P441)

During paralleling operations of the main generator to an infinite power grid, closing the generator output breaker with the frequency of the generator at 61 hertz and the grid frequency at 60 hertz will...

A. cause the generator to immediately increase load.

B. trip open the generator breaker on reverse power.

C. cause the generator voltage to increase.

D. cause the generator current to decrease.

ANSWER: A.

TOPIC: 291008
KNOWLEDGE: K1.08 [3.4/3.5]
QID: B743 (P743)

Which one of the following evolutions will draw the highest current from the main generator during operation of the output breaker?

A. Opening the output breaker under full-load conditions

B. Opening the output breaker under no-load conditions

C. Closing the output breaker with voltages out of phase

D. Closing the output breaker with voltages in phase

ANSWER: C.

TOPIC: 291008
KNOWLEDGE: K1.08 [3.4/3.5]
QID: B1143 (P1143)

A main generator is about to be connected to an infinite power grid with the following conditions:

Generator frequency	=	59.5 Hz
Grid frequency:	=	59.8 Hz
Generator voltage:	=	115.1 KV
Grid voltage:	=	114.8 KV

When the generator output breaker is closed, the generator will...

A. acquire real load and reactive load.

B. acquire real load but become a reactive load to the grid.

C. become a real load to the grid but acquire reactive load.

D. become a real load and a reactive load to the grid.

ANSWER: C.

TOPIC: 291008
KNOWLEDGE: K1.08 [3.4/3.5]
QID: B1240 (P1842)

A main generator is being prepared for paralleling with an infinite power grid. Which one of the following indicates that the main generator and the grid are in phase?

A. The synchroscope pointer is at the 12 o'clock position.

B. The frequency of the generator is equal to the frequency of the grid.

C. The synchroscope pointer is turning slowly in the clockwise direction.

D. The synchroscope pointer is turning slowly in the counterclockwise direction.

ANSWER: A.

TOPIC: 291008
KNOWLEDGE: K1.08 [3.4/3.5]
QID: B1744 (P1741)

A main generator is being paralleled to an infinite power grid. Generator voltage has been properly adjusted and the synchroscope is rotating slowly in the counterclockwise direction.

If the generator breaker is closed just prior to the synchroscope pointer reaching the 12 o'clock position, which one of the following is most likely to occur?

A. The breaker will close and the generator will supply only MW to the grid.

B. The breaker will close and the generator will supply both MW and MVAR to the grid.

C. The breaker will close and then open due to overcurrent.

D. The breaker will close and then open due to reverse power.

ANSWER: D.

TOPIC: 291008
KNOWLEDGE: K1.08 [3.4/3.5]
QID: B1843 (P241)

A main generator is being paralleled to an infinite power grid. Closing the output breaker of the generator with the frequency of the generator 0.1 Hz higher than grid frequency will result in the generator...

A. behaving as a real load to the grid.

B. behaving as a reactive load to the grid.

C. supplying a portion of the grid reactive load.

D. supplying a portion of the grid real load.

ANSWER: D.

TOPIC: 291008
KNOWLEDGE: K1.08 [3.4/3.5]
QID: B1941 (P43)

A main generator is being connected to an infinite power grid that is operating at 60 Hz. Generator output voltage is equal to the grid voltage but generator frequency is at 57 Hz.

Which one of the following generator conditions is most likely to occur if the generator output breaker is closed with voltages in phase (synchronized), but with the existing frequency difference? (Assume no generator breaker protective trip occurs.)

A. Reverse power

B. Underfrequency

C. Undervoltage

D. Overspeed

ANSWER: A.

TOPIC: 291008
KNOWLEDGE: K1.08 [3.4/3.5]
QID: B2042 (P2040)

A main generator is about to be connected to an infinite power grid. Which one of the following conditions will cause the main generator to immediately supply reactive power (MVAR) to the grid when the generator output breaker is closed?

A. Generator voltage is slightly higher than grid voltage.

B. Generator voltage is slightly lower than grid voltage.

C. The synchroscope is turning slowly in the clockwise direction.

D. The synchroscope is turning slowly in the counterclockwise direction.

ANSWER: A.

TOPIC: 291008
KNOWLEDGE: K1.08 [3.4/3.5]
QID: B2043 (P2044)

Two identical 1,000 MW electrical generators are being connected to the same electrical bus. Generator A is currently supplying the bus. Generator A and B output indications are as follows:

Generator A	Generator B
4,160 Volts	4,140 Volts
60.2 Hertz	60.8 Hertz
25 MW	0 MW
10 MVAR	0 MVAR

When the output breaker for generator B is closed, which generator is more likely to trip on reverse power?

A. Generator A, due to the higher initial voltage.

B. Generator A, due to the lower initial frequency.

C. Generator B, due to the lower initial voltage.

D. Generator B, due to the higher initial frequency.

ANSWER: B.

TOPIC: 291008
KNOWLEDGE: K1.08 [3.4/3.5]
QID: B2044 (P2143)

A main generator is about to be connected to an infinite power grid. Generator voltage equals grid voltage and the synchroscope is rotating slowly in the clockwise direction. The generator breaker is closed just as the synchroscope pointer reaches the 12 o'clock position.

Which one of the following will occur after the breaker is closed?

A. The breaker will remain closed and the generator will supply only MW to the grid.

B. The breaker will remain closed and the generator will supply both MW and MVAR to the grid.

C. The breaker will trip open due to overcurrent.

D. The breaker will trip open due to reverse power.

ANSWER: A.

TOPIC: 291008
KNOWLEDGE: K1.08 [3.4/3.5]
QID: B2142 (P2240)

A main generator is being prepared for paralleling with an infinite power grid. Which one of the following indicates that the generator and grid voltages are in phase?

A. The voltage of the generator is equal to the voltage of the grid.

B. The frequency of the generator is equal to the frequency of the grid.

C. The synchroscope pointer is turning slowly in the clockwise direction.

D. The synchroscope pointer is passing through the 12 o’clock position.

ANSWER: D.

TOPIC: 291008
KNOWLEDGE: K1.08 [3.4/3.5]
QID: B2343 (P2343)

A main generator is about to be connected to an infinite power grid. Generator voltage is slightly higher than grid voltage and the synchroscope is rotating slowly in the clockwise direction. The generator breaker is closed just as the synchroscope pointer reaches the 12 o'clock position.

Which one of the following will occur after the breaker is closed?

A. The breaker will remain closed and the generator will supply only MW to the grid.

B. The breaker will remain closed and the generator will supply both MW and MVAR to the grid.

C. The breaker will open due to overcurrent.

D. The breaker will open due to reverse power.

ANSWER: B.

TOPIC: 291008
KNOWLEDGE: K1.08 [3.4/3.5]
QID: B2443 (P2441)

A main generator is about to be connected to an infinite power grid. Generator voltage is equal to grid voltage and the synchroscope is rotating slowly in the counterclockwise direction. The generator breaker is closed just prior to the synchroscope pointer reaching the 12 o'clock position.

Which one of the following is most likely to occur after the breaker is closed?

A. The breaker will remain closed and the generator will supply only MW to the grid.

B. Thee breaker will remain closed and the generator will supply both MW and MVAR to the grid.

C. The breaker will open due to overcurrent.

D. The breaker will open due to reverse power.

ANSWER: D.

TOPIC: 291008
KNOWLEDGE: K1.08 [3.4/3.5]
QID: B2643 (P2440)

A main generator is being prepared for paralleling with an infinite power grid. At which one of the following synchroscope pointer positions is the main generator output voltage the farthest out of phase with the grid voltage?

A. 3 o'clock

B. 6 o'clock

C. 9 o'clock

D. 12 o'clock

ANSWER: B.

TOPIC: 291008
KNOWLEDGE: K1.08 [3.4/3.5]
QID: B2742 (P2743)

A main generator is being paralleled to an infinite power grid with the following conditions:

Generator frequency	=	59.9 Hz
Grid frequency	=	60.1 Hz
Generator voltage	=	114.8 KV
Grid voltage	=	115.1 KV

When the generator output breaker is closed, the generator will...

A. acquire real load and reactive load.

B. acquire real load, but become a reactive load to the grid.

C. become a real load to the grid, but acquire reactive load.

D. become a real load and a reactive load to the grid.

ANSWER: D.

TOPIC: 291008
KNOWLEDGE: K1.08 [3.4/3.5]
QID: B2843 (P2642)

A main generator is about to be connected to an infinite power grid. Generator voltage is slightly higher than grid voltage and the synchroscope is rotating slowly in the clockwise direction. The generator breaker is closed just as the synchroscope pointer reaches the 3 o'clock position.

Which one of the following is most likely to occur after the breaker is closed?

A. The breaker will remain closed and the generator will supply only MW to the grid.

B. The breaker will remain closed and the generator will supply both MW and MVAR to the grid.

C. The breaker will open due to overcurrent.

D. The breaker will open due to reverse power.

ANSWER: C.

TOPIC: 291008
KNOWLEDGE: K1.08 [3.4/3.5]
QID: B2942 (P2642)

A main generator is about to be connected to an infinite power grid. Generator voltage is slightly higher than grid voltage and the synchroscope is rotating slowly in the clockwise direction. The generator breaker is closed just as the synchroscope pointer reaches the 4 o'clock position.

Which one of the following will occur after the breaker is closed?

A. The breaker will remain closed and the generator will supply only MW to the grid.

B. The breaker will remain closed and the generator will supply both MW and MVAR to the grid.

C. The breaker will open due to overcurrent.

D. The breaker will open due to reverse power.

ANSWER: C.

TOPIC: 291008
KNOWLEDGE: K1.08 [3.4/3.5]
QID: B3842 (P3841)

Which one of the following will cause the most damage to the contact surfaces of a main generator output breaker?

A. An operator attempts to close the main generator breaker with the generator and power grid frequencies matched but with voltages 180 degrees out of phase.

B. An operator attempts to close the main generator breaker with the generator and power grid voltages in phase but with generator frequency 0.5 percent higher than power grid frequency.

C. The main generator breaker automatically trips open on a loss of offsite power while the main generator is operating at its minimum rated load.

D. The main generator breaker automatically trips open on a loss of offsite power while the main generator is operating at its maximum rated load.

ANSWER: A.

TOPIC: 291008
KNOWLEDGE: K1.08 [3.4/3.5]
QID: B4321 (P4321)

A main generator is about to be connected to an infinite power grid. The main generator has the following initial conditions:

Generator frequency	= 59.9 Hz	Generator voltage	= 115.1 KV
Grid frequency	= 60.1 Hz	Grid voltage	= 114.8 KV

When the generator output breaker is closed, the generator will...

A. acquire real load and reactive load.

B. acquire real load, but become a reactive load to the grid.

C. become a real load and a reactive load to the grid.

D. become a real load to the grid, but acquire reactive load.

ANSWER: D.

TOPIC: 291008
KNOWLEDGE: K1.08 [3.4/3.5]
QID: B4322 (P4322)

During a routine inspection of a main generator output breaker, a technician discovers severely damaged main contact surfaces. Which one of the following is the most likely cause of the damaged contact surfaces?

A. The main generator breaker automatically tripped open after it was closed with the generator and power grid voltages 60 degrees out of phase.

B. The main generator breaker automatically tripped open due to a faulty trip relay actuation while the main generator was operating unloaded.

C. The main generator breaker automatically tripped open on a loss of offsite power while the main generator was operating at its maximum rated load.

D. The main generator breaker automatically tripped open after it was closed with the generator and power grid voltages in phase but with generator frequency 0.2 Hz lower than power grid frequency.

ANSWER: A.

TOPIC: 291008
KNOWLEDGE: K1.08 [3.4/3.5]
QID: B5122 (P5121)

A main generator is about to be connected to an infinite power grid. Generator output frequency is slightly higher than grid frequency and generator output voltage is equal to grid voltage.

Which one of the following situations will exist when the main generator electrical conditions stabilize immediately after the generator output breaker is closed? (Assume no additional operator actions are taken.)

A. Generator output current will be 0.

B. Generator power factor will be 0.

C. Generator output MVAR will be 0.

D. Generator output MW will be 0.

ANSWER: C.

TOPIC: 291008
KNOWLEDGE: K1.08 [3.4/3.5]
QID: B5621 (P5620)

A main generator is being connected to an infinite power grid. The following frequencies exist just prior to closing the generator output breaker:

Generator frequency = 59.9 Hz
Grid frequency = 60.1 Hz

When conditions stabilize just after the generator output breaker is closed, the generator frequency will be _____; and the grid frequency will be _____.

A. 59.9 Hz; 59.9 Hz

B. 59.9 Hz; 60.1 Hz

C. 60.0 Hz; 60.0 Hz

D. 60.1 Hz; 60.1 Hz

ANSWER: D.

TOPIC: 291008
KNOWLEDGE: K1.08 [3.4/3.5]
QID: B6322 (P6321)

A diesel generator (DG) was initially operating at 80 percent of rated load supplying an isolated electrical bus when a malfunction caused the DG output breaker to trip. The breakers for all of the bus loads--all of which are large motors--remained closed, preparing the motors to restart upon restoration of power to the bus.

The DG output breaker has been repaired. With all of the bus load breakers still closed, which one of the following will occur when the DG output breaker is closed to reenergize the bus?

A. The DG will become lightly loaded.

B. The DG will return directly to its initial load.

C. The DG will experience slight overload conditions.

D. The DG will experience severe overload conditions.

ANSWER: D.

TOPIC: 291008
KNOWLEDGE: K1.08 [3.4/3.5]
QID: B6722 (P6722)

The main generator output breaker is about to be closed to connect the main generator to the power grid via the main transformer. The main transformer voltage and frequency are as follows:

Voltage = 20,000 volts
Frequency = 60.0 Hz

Which combination of main generator voltage and frequency will ensure that the main generator will immediately supply real (MW) and reactive (MVAR) electrical power to the power grid when the main generator output breaker is closed?

A. 19,950 volts; 59.9 Hz

B. 19,950 volts; 60.1 Hz

C. 20,050 volts; 59.9 Hz

D. 20,050 volts; 60.1 Hz

ANSWER: D.

TOPIC: 291008
KNOWLEDGE: K1.08 [3.4/3.5]
QID: B7022 (P7022)

If a main generator output breaker is closed when the generator output is 5 degrees out of phase with the local power grid, the main generator will experience a sudden _____ stress; if the breaker remains closed and no additional operator action is taken, the main generator will _____ with the grid.

A minor; remain out of phase

B. minor; become locked into phase

C. potentially damaging; remain out of phase

D. potentially damaging; become locked into phase

ANSWER: B.

TOPIC: 291008
KNOWLEDGE: K1.09 [3.4/3.5]
QID: B44 (P642)

When a typical 4,160 volt breaker is racked to the TEST position, control power is _____ the breaker; and the breaker is _____ the load.

A. removed from; isolated from

B. removed from; connected to

C. available to; isolated from

D. available to; connected to

ANSWER: C.

TOPIC: 291008
KNOWLEDGE: K1.09 [3.4/3.5]
QID: B244

If a breaker is racked to the TEST position, the...

A. remote position indication for the breaker is still operational.

B. breaker can only be operated remotely from its associated remote control panel.

C. electrical jumpers must be connected to the operating coils to operate the breaker.

D. normal breaker opening and closing operations cannot be tested because the TEST position is for overload testing only.

ANSWER: A.

TOPIC: 291008
KNOWLEDGE: K1.09 [3.4/3.5]
QID: B1943 (P40)

Loss of breaker control power will cause...

A. breaker line voltage to indicate zero regardless of actual breaker position.

B. the remote breaker position to indicate open regardless of actual breaker position.

C. inability to operate the breaker locally and remotely.

D. failure of the closing spring to charge following local closing of the breaker.

ANSWER: D.

TOPIC: 291008
KNOWLEDGE: K1.09 [3.4/3.5]
QID: B2141 (P118)

Which one of the following results from a loss of control power to a breaker supplying a motor?

A. Motor ammeter indication will be zero regardless of actual breaker position.

B. Breaker position will remotely indicate closed regardless of actual position.

C. Breaker will trip open due to the actuation of its protective trip device.

D. Charging motor will <u>not</u> charge the closing spring after the breaker is locally closed.

ANSWER: D.

TOPIC: 291008
KNOWLEDGE: K1.10 [3.3/3.4]
QID: B644 (P844)

High-voltage disconnect switches are used to...

A. adjust the output voltage range from a main power transformer.

B. protect bus feeder breakers by opening upon bus short-circuit faults.

C. provide equipment isolation under no-load conditions.

D. bypass and isolate an electrical bus while maintaining the downstream buses energized.

ANSWER: C.

TOPIC: 291008
KNOWLEDGE: K1.10 [3.3/3.4]
QID: B1244

High voltage electrical disconnects should <u>not</u> be used to...

A. tie buswork sections together.

B. interrupt circuits under load.

C. electrically ground buswork.

D. isolate equipment electrically.

ANSWER: B.

TOPIC: 291008
KNOWLEDGE: K1.10 [3.3/3.4]
QID: B1544 (P1840)

Typical high-voltage transformer disconnect switches are designed to...

A. automatically protect the transformer from overcurrent conditions.

B. automatically trip open prior to transformer output breaker trip.

C. manually isolate the transformer during no-load conditions.

D. manually interrupt the transformer output circuit under any load when grounds are detected.

ANSWER: C.

TOPIC: 291008
KNOWLEDGE: K1.10 [3.3/3.4]
QID: B1842 (P243)

The function of high-voltage disconnect switches is to provide _____ electrical isolation of equipment during _____ conditions.

A. manual; no-load

B. manual; overload

C. automatic; no-load

D. automatic; overload

ANSWER: A.

TOPIC: 291008
KNOWLEDGE: K1.10 [3.3/3.4]
QID: B2244 (P943)

What is an advantage of using high-voltage disconnect switches instead of breakers to isolate main power transformers?

A. Disconnect switches can be operated either locally or remotely.

B. Disconnect switches provide direct visual indication that the circuit is broken.

C. Disconnect switches are cheaper and provide the same automatic protection as a breaker.

D. Disconnect switches are capable of interrupting a higher current flow with less heating than a breaker.

ANSWER: B.

TOPIC: 291008
KNOWLEDGE: K1.10 [3.3/3.4]
QID: B2744 (P2742)

Refer to the simplified drawing of an electrical distribution system showing 7.2 KV switchgear, step-down transformers, and 480 V motor control centers (MCCs) (see figure below).

The high voltage side of each step-down transformer has a remote-operated disconnect to allow transformer maintenance while keeping the other transformers in service. The control circuit for each disconnect is position-interlocked with the associated MCC feeder breaker.

Which one of the following describes the purpose served by the interlock?

A. Prevent damage to the disconnect.

B. Prevent damage to the transformer.

C. Prevent damage to the feeder breaker.

D. Prevent damage to the 480V MCC.

ANSWER: A.

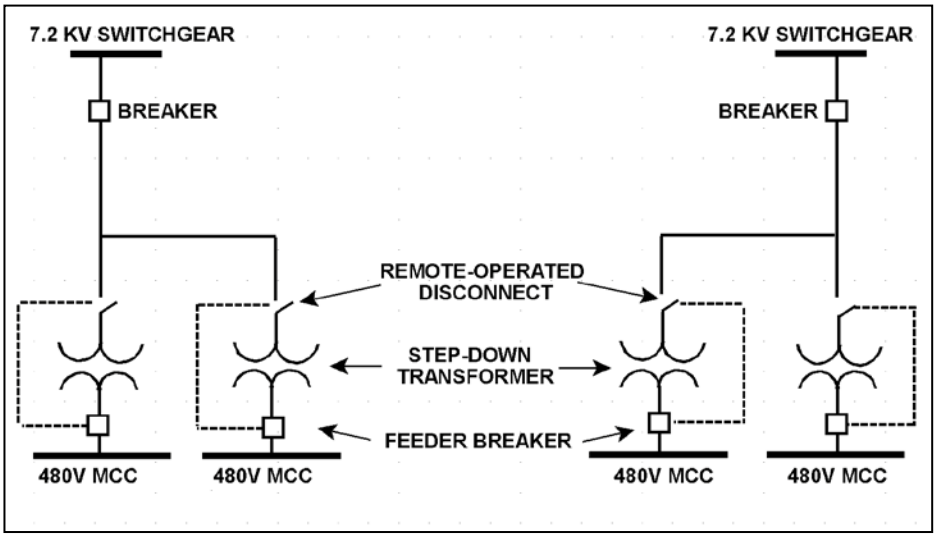

TOPIC: 291008
KNOWLEDGE: K1.10 [3.3/3.4]
QID: B2944 (P2944)

A 480 VAC motor control center supplies a load through a breaker and a manual disconnect switch. Which one of the following sequences will provide the greatest level of personnel safety when deenergizing the load for maintenance and when reenergizing the load after the maintenance?

	DEENERGIZING	REENERGIZING
A.	Open breaker first	Shut breaker first
B.	Open breaker first	Shut disconnect switch first
C.	Open disconnect switch first	Shut breaker first
D.	Open disconnect switch first	Shut disconnect switch first

ANSWER: B.

TOPIC: 291008
KNOWLEDGE: K1.10 [3.3/3.4]
QID: B3744 (P3744)

Refer to the simplified drawing of an electrical distribution system showing 7.2 KV switchgear, step-down transformers, and 480 V motor control centers (MCCs) (see figure below).

The high voltage side of each step-down transformer has a remote-operated disconnect. The control circuit for each disconnect is position-interlocked with the associated MCC feeder breaker. Which one of the following describes the interlock operating scheme that will provide the greatest protection for the disconnect?

A. Permits opening the feeder breaker only if the disconnect is closed.

B. Permits opening the feeder breaker only if the disconnect is open.

C. Permits opening the disconnect only if the feeder breaker is closed.

D. Permits opening the disconnect only if the feeder breaker is open.

ANSWER: D.

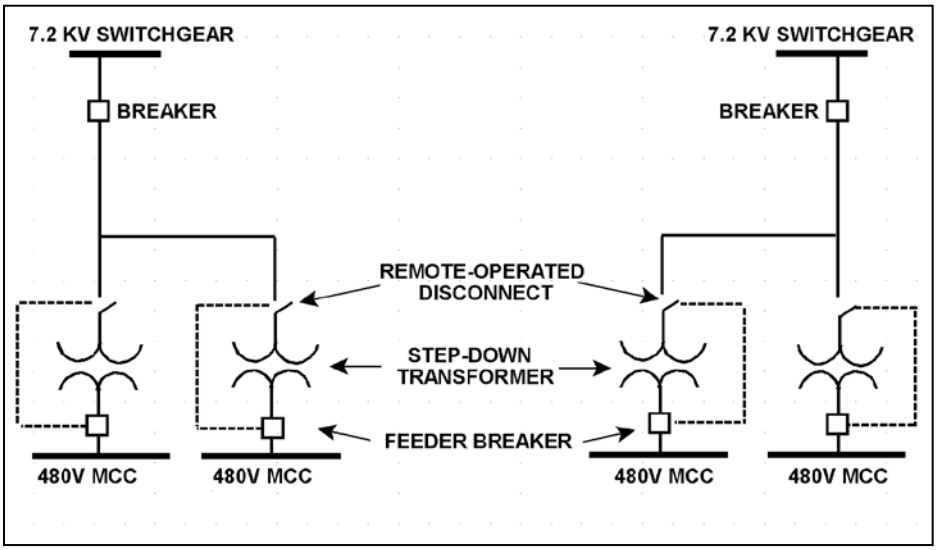

TOPIC: 292001
KNOWLEDGE: K1.02 [3.0/3.1]
QID: B45

The term “neutron generation time” is defined as the average time between...

A. neutron absorption and the resulting fission.

B. the production of a delayed neutron and subsequent neutron thermalization.

C. neutron absorption producing a fission and absorption or leakage of resultant neutrons.

D. neutron thermalization and subsequent neutron absorption.

ANSWER: C.

TOPIC: 292001
KNOWLEDGE: K1.02 [3.0/3.1]
QID: B174

Which one of the following is the definition of the term prompt neutron?

A. A high-energy neutron emitted from a neutron precursor, immediately after the fission process.

B. A neutron with an energy level greater than 0.1 MeV, emitted in less than 1.0×10^{-4} seconds following a nuclear fission.

C. A neutron emitted in less than 1.0×10^{-14} seconds following a nuclear fission.

D. A neutron emitted as a result of a gamma-neutron or alpha-neutron reaction.

ANSWER: C.

TOPIC: 292001
KNOWLEDGE: K1.02 [3.0/3.1]
QID: B245

Delayed neutrons are neutrons that...

A. have reached thermal equilibrium with the surrounding medium.

B. are expelled within 1.0×10^{-14} seconds of the fission event.

C. are expelled with the lowest average kinetic energy of all fission neutrons.

D. are responsible for the majority of U-235 fissions.

ANSWER: C.

TOPIC: 292001
KNOWLEDGE: K1.02 [3.0/3.1]
QID: B1146 (P1945)

Which one of the following types of neutrons has an average neutron generation lifetime of 12.5 seconds?

A. Prompt

B. Delayed

C. Fast

D. Thermal

ANSWER: B.

TOPIC: 292001
KNOWLEDGE: K1.02 [3.0/3.1]
QID: B1345 (P1445)

A neutron that is expelled 1.0×10^{-2} seconds after the associated fission event is a _____ neutron.

A. thermal

B. delayed

C. prompt

D. capture

ANSWER: B.

TOPIC: 292001
KNOWLEDGE: K1.02 [3.0/3.1]
QID: B1545 (P1145)

Which one of the following is a characteristic of a prompt neutron?

A. Expelled with an average kinetic energy of 0.5 MeV.

B. Usually emitted by the excited nucleus of a fission product.

C. Accounts for more than 99 percent of fission neutrons.

D. Released an average of 13 seconds after the fission event.

ANSWER: C.

TOPIC: 292001
KNOWLEDGE: K1.02 [3.0/3.1]
QID: B1845 (P545)

Delayed neutrons are fission neutrons that...

A. are released at the instant of fission.

B. are responsible for the majority of U-235 fissions.

C. have reached thermal equilibrium with the surrounding medium.

D. are expelled at a lower average kinetic energy than most other fission neutrons.

ANSWER: D.

TOPIC: 292001
KNOWLEDGE: K1.02 [3.0/3.1]
QID: B1945 (P845)

Delayed neutrons are neutrons that...

A. have reached thermal equilibrium with the surrounding medium.

B. are expelled within 1.0×10^{-14} seconds of the fission event.

C. are produced from the radioactive decay of certain fission fragments.

D. are responsible for the majority of U-235 fissions.

ANSWER: C.

TOPIC: 292001
KNOWLEDGE: K1.02 [3.0/3.1]
QID: B2046 (P2045)

In a comparison between a delayed neutron and a prompt neutron produced from the same fission event, the prompt neutron is more likely to... (Assume that both neutrons remain in the core.)

A. require a greater number of collisions to become a thermal neutron.

B. be captured by U-238 at a resonance energy peak between 1 eV and 1000 eV.

C. be expelled with a lower kinetic energy.

D. cause thermal fission of a U-235 nucleus.

ANSWER: A.

TOPIC: 292001
KNOWLEDGE: K1.02 [3.0/3.1]
QID: B2145 (P2145)

In a comparison between a delayed neutron and a prompt neutron produced from the same fission event, the prompt neutron is more likely to... (Assume that both neutrons remain in the core.)

A. cause fast fission of a U-238 nucleus.

B. be captured by a U-238 nucleus at a resonance energy between 1 eV and 1000 eV.

C. be captured by a Xe-135 nucleus.

D. cause thermal fission of a U-235 nucleus.

ANSWER: A.

TOPIC: 292001
KNOWLEDGE: K1.02 [3.0/3.1]
QID: B2245 (P5023)

In a comparison between a delayed neutron and a prompt neutron produced from the same fission event, the delayed neutron is more likely to... (Assume that each neutron remains in the core unless otherwise stated.)

A. cause fission of a U-238 nucleus.

B. travel to an adjacent fuel assembly.

C. be absorbed in a B-10 nucleus.

D. leak out of the core.

ANSWER: C.

TOPIC: 292001
KNOWLEDGE: K1.02 [3.0/3.1]
QID: B2345 (P2345)

A neutron that is released 1.0×10^{-10} seconds after the associated fission event is classified as a _____ fission neutron.

A. delayed

B. prompt

C. thermal

D. spontaneous

ANSWER: A.

TOPIC: 292001
KNOWLEDGE: K1.02 [3.0/3.1]
QID: B2545 (P2545)

In a comparison between a delayed neutron and a prompt neutron produced from the same fission event, the prompt neutron is more likely to...

A. be captured by a Xe-135 nucleus.

B. cause thermal fission of a U-235 nucleus.

C. leak out of the core while slowing down.

D. be captured by a U-238 nucleus at a resonance energy.

ANSWER: C.

TOPIC: 292001
KNOWLEDGE: K1.02 [3.0/3.1]
QID: B2645 (P2645)

In a comparison between a delayed neutron and a prompt neutron produced from the same fission event, the delayed neutron is more likely to...

A. leak out of the core.

B. cause fission of a U-238 nucleus.

C. become a thermal neutron.

D. cause fission of a Pu-240 nucleus.

ANSWER: C.

TOPIC: 292001
KNOWLEDGE: K1.02 [3.0/3.1]
QID: B2945 (P2945)

Which one of the following types of neutrons in a reactor is more likely to cause fission of a U-238 nucleus in the reactor fuel? (Assume that each type of neutron remains in the reactor core until it interacts with a U-238 nucleus.)

A. Thermal neutron

B. Prompt fission neutron beginning to slow down

C. Delayed fission neutron beginning to slow down

D. Fission neutron at a U-238 resonance energy

ANSWER: B.

TOPIC: 292001
KNOWLEDGE: K1.02 [3.0/3.1]
QID: B3145 (P2845)

During a brief time interval in a typical reactor operating steady-state near the beginning of a fuel cycle, 1.0×10^3 delayed neutrons were emitted.

Approximately how many prompt neutrons were emitted during this same time interval?

A. 1.5×10^5

B. 6.5×10^6

C. 1.5×10^7

D. 6.5×10^8

ANSWER: A.

TOPIC: 292001
KNOWLEDGE: K1.02 [3.0/3.1]
QID: B3345 (P2445)

In a comparison between a prompt neutron and a delayed neutron produced from the same fission event, the delayed neutron requires _____ collisions in the moderator to become thermal; and is _____ likely to cause fission of a U-238 nucleus. (Ignore the effects of neutron leakage.)

A. more; more

B. more; less

C. fewer; more

D. fewer; less

ANSWER: D.

TOPIC: 292001
KNOWLEDGE: K1.02 [3.0/3.1]
QID: B3545 (P3545)

During a brief time interval in a typical reactor operating steady-state at the beginning of a fuel cycle, 1.0×10^5 delayed neutrons were emitted.

Approximately how many prompt neutrons were emitted in the reactor during this same time interval?

A. 1.5×10^5

B. 6.5×10^6

C. 1.5×10^7

D. 6.5×10^8

ANSWER: C.

TOPIC: 292001
KNOWLEDGE: K1.02 [3.0/3.1]
QID: B4123 (P4123)

A neutron that appears 1.0×10^{-16} seconds after the associated fission event is classified as a _____ fission neutron.

A. delayed

B. prompt

C. thermal

D. spontaneous

ANSWER: B.

TOPIC: 292001
KNOWLEDGE: K1.02 [3.0/3.1]
QID: B4923 (P4923)

During a brief time interval in a typical reactor operating steady-state near the beginning of a fuel cycle, 4.25×10^{5} delayed neutrons were emitted.

Approximately how many prompt neutrons were emitted in the reactor during this same time interval?

A. 1.5×10^{6}

B. 6.5×10^{6}

C. 1.5×10^{7}

D. 6.5×10^{7}

ANSWER: D.

TOPIC: 292001
KNOWLEDGE: K1.02 [3.0/3.1]
QID: B7123 (P7123)

Which one of the following is the process that produces the majority of delayed neutrons in an operating reactor?

A. A thermal neutron is absorbed by a fuel nucleus. After a period of time, the nucleus fissions and releases a delayed neutron.

B. A thermal neutron is absorbed by a fuel nucleus. The fuel nucleus fissions. During the decay process of the fission products, a delayed neutron is emitted.

C. A fast neutron is absorbed by a fuel nucleus. After a period of time, the nucleus fissions and releases a delayed neutron.

D. A fast neutron is absorbed by a fuel nucleus. The fuel nucleus fissions. During the decay process of the fission products, a delayed neutron is emitted.

ANSWER: B.

TOPIC: 292001
KNOWLEDGE: K1.03 [2.7/2.7]
QID: B345

A neutron that possesses the same kinetic energy as its surroundings is called a/an _____ neutron.

A. slow

B. intermediate

C. resonance

D. thermal

ANSWER: D.

TOPIC: 292001
KNOWLEDGE: K1.03 [2.7/2.7]
QID: B545

A neutron is "thermal" when...

A. its kinetic energy is in the 1 eV to 1,000 eV energy range.

B. it is in energy equilibrium with the moderating medium.

C. it is released from the fission of a U-235 atom.

D. its cross-section for absorption in the fuel undergoes a sudden decrease.

ANSWER: B.

TOPIC: 292001
KNOWLEDGE: K1.03 [2.7/2.7]
QID: B645

The kinetic energy of thermal neutrons in a reactor operating at full power is...

A. less than 0.1 eV.

B. between 1 and 10 eV.

C. between 100 and 1,000 eV.

D. greater than 1 MeV.

ANSWER: A.

TOPIC: 292001
KNOWLEDGE: K1.03 [2.7/2.7]
QID: B846

Which one of the following describes the energy level of a thermal neutron in a reactor operating at full power?

A. The kinetic energy of the neutron has decreased until it is in equilibrium with its surroundings.

B. The potential energy of the neutron has decreased to nearly zero as the neutron approaches equilibrium with its surroundings.

C. The kinetic energy of the neutron has decreased sufficiently to allow the neutron to be resonantly absorbed by U-238.

D. The potential energy of the neutron has decreased to a level that will allow the neutron to be absorbed by U-235.

ANSWER: A.

TOPIC: 292001
KNOWLEDGE: K1.03 [2.7/2.7]
QID: B945

Regarding a thermal neutron, the word "thermal" indicates that the neutron...

A. was expelled greater than 10^{-14} seconds after the fission event.

B. is a product of a thermal fission reaction.

C. was released by the decay of fission fragments.

D. is at the same energy level as the surrounding atoms.

ANSWER: D.

TOPIC: 292001
KNOWLEDGE: K1.03 [2.7/2.7]
QID: B2446

A thermal neutron exists at an energy _____ the epithermal range; and its cross section for absorption in U-235 _____ as the neutron energy decreases.

A. above; decreases

B. above; increases

C. below; decreases

D. below; increases

ANSWER: D.

TOPIC: 292001
KNOWLEDGE: K1.04 [3.2/3.2]
QID: B246

A fission neutron will typically lose the most energy when it interacts with a/an...

A. hydrogen atom in a water molecule.

B. oxygen atom in a water molecule.

C. helium atom in the fuel pin fill gas.

D. zirconium atom in the fuel clad.

ANSWER: A.

TOPIC: 292001
KNOWLEDGE: K1.04 [3.2/3.2]
QID: B445

Which one of the following conditions will increase the amount of neutron moderation in a reactor operating at 50 percent power?

A. Increasing moderator temperature

B. Reducing feedwater inlet temperature

C. Reducing reactor vessel pressure

D. Reducing reactor recirculation system flow rate

ANSWER: B.

TOPIC: 292001
KNOWLEDGE: K1.04 [3.2/3.2]
QID: B446

Neutron moderation describes...

A. a decrease in the core neutron population from thermal neutron absorption.

B. an increase in the neutron multiplication factor due to a reduction in neutron poisons.

C. the loss of fission neutrons from the core by leakage.

D. the reduction of neutron energy due to scattering reactions.

ANSWER: D.

TOPIC: 292001
KNOWLEDGE: K1.04 [3.2/3.2]
QID: B745

During moderation of a fission neutron, the neutron is most susceptible to resonance absorption when it is a/an _____ neutron.

A. slow

B. fast

C. epithermal

D. thermal

ANSWER: C.

TOPIC: 292001
KNOWLEDGE: K1.04 [3.2/3.2]
QID: B1646

Which one of the following will decrease the ability of the coolant to moderate neutrons in a reactor operating at saturated conditions?

A. Decreasing coolant temperature.

B. Decreasing feedwater inlet temperature.

C. Decreasing reactor vessel pressure.

D. Increasing reactor recirculation system flow rate.

ANSWER: C.

TOPIC: 292001
KNOWLEDGE: K1.04 [3.2/3.2]
QID: B2746

A fast neutron will lose the greatest amount of energy during a scattering reaction in the moderator if it interacts with...

A. an oxygen nucleus.

B. a hydrogen nucleus.

C. a deuterium nucleus.

D. an electron orbiting a nucleus.

ANSWER: B.

TOPIC: 292001
KNOWLEDGE: K1.04 [3.2/3.2]
QID: B6623

Which one of the following accounts for the majority of energy transfer from a fission neutron while slowing down in a moderator?

A. Collisions with the nuclei in the moderator.

B. Collisions with the electrons in the moderator.

C. Interactions with the electric fields of the nuclei in the moderator.

D. Interactions with the electric fields of the electrons in the moderator.

ANSWER: A.

TOPIC: 292001
KNOWLEDGE: K1.05 [2.4/2.6]
QID: B346

The best neutron moderator is _____ and is composed of _____ atoms.

A. dense; large

B. not dense; large

C. dense; small

D. not dense; small

ANSWER: C.

TOPIC: 292001
KNOWLEDGE: K1.05 [2.4/2.6]
QID: B1046

The ideal moderator has a _____ macroscopic absorption cross section for thermal neutrons and a _____ average logarithmic energy decrement.

A. large; small

B. large; large

C. small; small

D. small; large

ANSWER: D.

TOPIC: 292001
KNOWLEDGE: K1.05 [2.4/2.6]
QID: B5323

The ideal neutron moderator has a _____ microscopic scattering cross section for thermal neutrons and a _____ density.

A. small; low

B. small; high

C. large; low

D. large; high

ANSWER: D.

TOPIC: 292002
KNOWLEDGE: K1.07 [3.5/3.5]
K1.08 [2.7/2.8]
QID: B186 (P44)

A reactor is initially subcritical with the effective multiplication factor (K_{eff}) equal to 0.998. After a brief withdrawal of control rods, K_{eff} equals 1.002. The reactor is currently...

A. prompt critical.

B. supercritical.

C. exactly critical.

D. subcritical.

ANSWER: B.

TOPIC: 292002
KNOWLEDGE: K1.07 [3.5/3.5]
QID: B247 (P445)

Which one of the following conditions describes a reactor that is exactly critical?

A. $K_{eff} = 0$; $\Delta K/K = 0$

B. $K_{eff} = 0$; $\Delta K/K = 1$

C. $K_{eff} = 1$; $\Delta K/K = 0$

D. $K_{eff} = 1$; $\Delta K/K = 1$

ANSWER: C.

TOPIC: 292002
KNOWLEDGE: K1.08 [2.7/2.8]
QID: B46

Which one of the following does not affect K_{eff}?

A. Core dimensions

B. Core burnup

C. Moderator-to-fuel ratio

D. Installed neutron sources

ANSWER: D.

TOPIC: 292002
KNOWLEDGE: K1.08 [2.7/2.8]
QID: B348

Which one of the following, if decreased, will not affect K_{eff}?

A. Fuel enrichment

B. Control rod worth

C. Neutron contribution from neutron sources

D. Shutdown margin when the reactor is subcritical

ANSWER: C.

TOPIC: 292002
KNOWLEDGE: K1.08 [2.7/2.8]
QID: B847 (P1846)

The effective multiplication factor (K_{eff}) describes the ratio of the number of fission neutrons at the end of one generation to the number of fission neutrons at the _____ of the _____ generation.

A. beginning; next

B. beginning; previous

C. end; next

D. end; previous

ANSWER: D.

TOPIC: 292002
KNOWLEDGE: K1.08 [2.7/2.8]
QID: B1447 (P1346)

The effective multiplication factor (K_{eff}) can be determined by dividing the number of neutrons in the third generation by the number of neutrons in the _____ generation.

A. first

B. second

C. third

D. fourth

ANSWER: B.

TOPIC: 292002
KNOWLEDGE: K1.08 [2.7/2.8]
QID: B2647 (P2647)

A thermal neutron is about to interact with a U-238 nucleus in an operating reactor. Which one of the following describes the most likely interaction and its effect on K_{eff}?

A. The neutron will be scattered, thereby leaving K_{eff} unchanged.

B. The neutron will be absorbed and the nucleus will fission, thereby decreasing K_{eff}.

C. The neutron will be absorbed and the nucleus will fission, thereby increasing K_{eff}.

D. The neutron will be absorbed and the nucleus will decay to Pu-239, thereby increasing K_{eff}.

ANSWER: A.

TOPIC: 292002
KNOWLEDGE: K1.08 [2.7/2.8]
QID: B3147 (P3046)

A nuclear power plant is currently operating at steady-state 80 percent power near the end of its fuel cycle. During the next 3 days of steady-state power operation, no operator action is taken.

How will core K_{eff} be affected during the 3-day period?

A. Core K_{eff} will gradually increase during the entire period.

B. Core K_{eff} will gradually decrease during the entire period.

C. Core K_{eff} will tend to increase, but inherent reactivity feedback will maintain K_{eff} at 1.0.

D. Core K_{eff} will tend to decrease, but inherent reactivity feedback will maintain K_{eff} at 1.0.

ANSWER: D.

TOPIC: 292002
KNOWLEDGE: K1.08 [2.7/2.8]
QID: B6424 (P6424)

A 1.5 MeV neutron is about to interact with a U-238 nucleus in an operating reactor. Which one of the following describes the most likely interaction and its effect on K_{eff}?

A. The neutron will be scattered, thereby leaving K_{eff} unchanged.

B. The neutron will be absorbed and the nucleus will fission, thereby decreasing K_{eff}.

C. The neutron will be absorbed and the nucleus will fission, thereby increasing K_{eff}.

D. The neutron will be absorbed and the nucleus will decay to Pu-239, thereby increasing K_{eff}.

ANSWER: A.

TOPIC: 292002
KNOWLEDGE: K1.09 [2.4/2.6]
QID: B1147

Which one of the following combinations of core conditions at 30 percent power indicates the largest amount of excess reactivity exists in the core?

	Control Rod Position	Reactor Recirculation Flow
A.	25% rod density	25%
B.	50% rod density	50%
C.	25% rod density	50%
D.	50% rod density	25%

ANSWER: D.

TOPIC: 292002
KNOWLEDGE: K1.09 [2.4/2.6]
QID: B1247

Which one of the following combinations of core conditions at 35 percent power indicates the least amount of excess reactivity exists in the core?

	Control Rod Position	Reactor Recirculation Flow
A.	50% inserted	50%
B.	50% inserted	25%
C.	25% inserted	50%
D.	25% inserted	25%

ANSWER: C.

TOPIC: 292002
KNOWLEDGE: K1.09 [2.4/2.6]
QID: B1848 (P646)

Which one of the following defines K-excess?

A. $K_{eff} - 1$

B. $K_{eff} + 1$

C. $(K_{eff} - 1)/K_{eff}$

D. $(1-K_{eff})/K_{eff}$

ANSWER: A.

TOPIC: 292002
KNOWLEDGE: K1.09 [2.4/2.6]
QID: B2048 (P1246)

Which one of the following is a reason for installing excess reactivity (K_{excess}) in a reactor?

A. To compensate for the conversion of U-238 to Pu-239 over core life.

B. To compensate for burnout of Xe-135 and Sm-149 during power changes.

C. To ensure the fuel temperature coefficient remains negative throughout core life.

D. To compensate for the negative reactivity added by the power coefficient during a power increase.

ANSWER: D.

TOPIC: 292002
KNOWLEDGE: K1.09 [2.4/2.6]
QID: B2747 (P2847)

A reactor is operating at full power at the beginning of a fuel cycle. A neutron has just been absorbed by a U-238 nucleus at a resonance energy of 6.7 electron volts.

Which one of the following describes the most likely reaction for the newly formed U-239 nucleus and the effect of this reaction on K_{excess}?

A. Decays over several days to Pu-239, which increases K_{excess}.

B. Decays over several days to Pu-240, which increases K_{excess}.

C. Immediately undergoes fast fission, which decreases K_{excess}.

D. Immediately undergoes thermal fission, which decreases K_{excess}.

ANSWER: A.

TOPIC: 292002
KNOWLEDGE: K1.09 [2.4/2.6]
QID: B2947

The following are combinations of critical conditions that may exist for the same reactor operating at 50 percent power at different times in core life. Which one of the following combinations indicates the largest amount of excess reactivity present in the reactor fuel?

	Control Rod Position	Reactor Recirculation Flow
A.	25% rod density	75%
B.	50% rod density	50%
C.	25% rod density	50%
D.	50% rod density	75%

ANSWER: B.

TOPIC: 292002
KNOWLEDGE: K1.09 [2.4/2.6]
QID: B3447

The following are combinations of critical conditions that existed for the same reactor operating at 50 percent power at different times in core life. Which one of the following combinations indicates the smallest amount of excess reactivity present in the reactor fuel?

	Control Rod Position	Reactor Recirculation Flow
A.	25% rod density	75%
B.	50% rod density	50%
C.	25% rod density	50%
D.	50% rod density	75%

ANSWER: A.

TOPIC: 292002
KNOWLEDGE: K1.09 [2.4/2.6]
QID: B3547 (P3547)

Which one of the following is a benefit of installing excess reactivity (K_{excess}) in a reactor?

A. Ensures that sufficient control rod negative reactivity is available to shut down the reactor.

B. Ensures that the reactor can be made critical during a peak xenon condition after a reactor scram.

C. Ensures that positive reactivity additions result in controllable reactor power responses.

D. Ensures that the U-235 fuel enrichment is the same at the beginning and the end of a fuel cycle.

ANSWER: B.

TOPIC: 292002
KNOWLEDGE: K1.10 [3.2/3.5]
QID: B248 (P245)

When determining the shutdown margin for an operating reactor, how many control rods are assumed to remain fully withdrawn?

A. A single control rod of the highest reactivity worth.

B. A symmetrical pair of control rods of the highest reactivity worth.

C. A single control rod of average reactivity worth.

D. A symmetrical pair of control rods of average reactivity worth.

ANSWER: A.

TOPIC: 292002
KNOWLEDGE: K1.10 [3.2/3.5]
QID: B1348

Shutdown margin for an operating reactor is the amount of reactivity by which a xenon-free reactor at 68°F would be subcritical if all control rods were...

A. withdrawn, assuming an average worth rod remains fully inserted.

B. inserted, assuming an average worth rod remains fully withdrawn.

C. withdrawn, assuming the highest worth rod remains fully inserted.

D. inserted, assuming the highest worth rod remains fully withdrawn.

ANSWER: D.

TOPIC: 292002
KNOWLEDGE: K1.11 [3.2/3.3]
QID: B47

The fractional change in neutron population from one generation to the next is called...

A. beta.

B. lambda.

C. reactivity.

D. K-effective.

ANSWER: C.

TOPIC: 292002
KNOWLEDGE: K1.12 [2.4/2.5]
QID: B648 (P1946)

In a subcritical reactor, K_{eff} was increased from 0.85 to 0.95 by rod withdrawal. Which one of the following is the approximate amount of reactivity that was added to the core?

A. 0.099 ΔK/K

B. 0.124 ΔK/K

C. 0.176 ΔK/K

D. 0.229 ΔK/K

ANSWER: B.

TOPIC: 292002
KNOWLEDGE: K1.12 [2.4/2.5]
QID: B748 (P3347)

With K_{eff} equal to 0.983, how much positive reactivity must be added to make the reactor critical? (Round answer to the nearest 0.01% ΔK/K.)

A. 1.70% ΔK/K

B. 1.73% ΔK/K

C. 3.40% ΔK/K

D. 3.43% ΔK/K

ANSWER: B.

TOPIC: 292002
KNOWLEDGE: K1.12 [2.4/2.5]
QID: B1548 (P446)

With K_{eff} equal to 0.987, how much reactivity must be added to make the reactor critical? (Round answer to the nearest 0.01% ΔK/K.)

A. 1.01% ΔK/K

B. 1.03% ΔK/K

C. 1.30% ΔK/K

D. 1.32% ΔK/K

ANSWER: D.

TOPIC: 292002
KNOWLEDGE: K1.12 [2.4/2.5]
QID: B1947 (P2447)

With K_{eff} equal to 0.985, how much positive reactivity is required to make the reactor critical? (Round answer to the nearest 0.01% ΔK/K.)

A. 1.49% ΔK/K

B. 1.50% ΔK/K

C. 1.52% ΔK/K

D. 1.55% ΔK/K

ANSWER: C.

TOPIC: 292002
KNOWLEDGE: K1.12 [2.4/2.5]
QID: B2848 (P2146)

With K_{eff} equal to 0.982, how much positive reactivity is required to make the reactor critical? (Round answer to the nearest 0.01% ΔK/K.)

A. 1.72% ΔK/K

B. 1.77% ΔK/K

C. 1.80% ΔK/K

D. 1.83% ΔK/K

ANSWER: D.

TOPIC: 292002
KNOWLEDGE: K1.14 [2.6/2.9]
QID: B548

The shutdown margin (SDM) upon full insertion of all control rods following a reactor scram from full power is _____ the SDM immediately prior to the scram.

A. equal to

B. less than

C. greater than

D. independent of

ANSWER: A.

TOPIC: 292002
KNOWLEDGE: K1.14 [2.6/2.9]
QID: B948

Which one of the following core changes will decrease shutdown margin?

A. Fuel depletion during reactor operation.

B. Buildup of Sm-149 after a reactor scram.

C. Increasing moderator temperature 10°F while shutdown.

D. Depletion of gadolinium during reactor operation.

ANSWER: D.

TOPIC: 292002
KNOWLEDGE: K1.14 [2.6/2.9]
QID: B1048

One hour ago, a reactor scrammed from 100 percent steady state power due to an instrument malfunction. All systems operated normally.

Given the following absolute values of reactivities added since the scram, assign a (+) or (–) as appropriate and choose the current value of core reactivity.

Xenon = ( ) 1.0% ΔK/K
Fuel temperature = ( ) 2.0% ΔK/K
Control rods = ( ) 14.0% ΔK/K
Voids = ( ) 3.0% ΔK/K

A. -8.0% ΔK/K

B. -10.0% ΔK/K

C. -14.0% ΔK/K

D. -20.0% ΔK/K

ANSWER: B.

TOPIC: 292002
KNOWLEDGE: K1.14 [2.6/2.9]
QID: B1248

Which one of the following will increase the shutdown margin for a subcritical reactor operating at 250°F in the middle of a fuel cycle?

A. Decay of Xenon-135

B. Increased core recirculation flow rate

C. Reactor coolant heatup

D. Control rod withdrawal

ANSWER: C.

TOPIC: 292002
KNOWLEDGE: K1.14 [2.6/2.9]
QID: B1648

A reactor scrammed from 100 percent steady-state power due to an instrument malfunction 16 hours ago. All systems operated normally.

Given the following absolute values of reactivities added since the scram, assign a (+) or (–) as appropriate and choose the current value of core reactivity.

Xenon = ( ) 1.5% ΔK/K
Fuel temperature = ( ) 2.5% ΔK/K
Control rods = ( ) 14.0% ΔK/K
Voids = ( ) 3.5% ΔK/K

A. -6.5% ΔK/K

B. -9.5% ΔK/K

C. -11.5% ΔK/K

D. -13.5% ΔK/K

ANSWER: B.

TOPIC: 292002
KNOWLEDGE: K1.14 [2.6/2.9]
QID: B1748

Twelve hours ago, a reactor scrammed from 100 percent steady-state power due to an instrument malfunction. All systems operated normally.

Given the following absolute values of reactivities added since the scram, assign a (+) or (–) as appropriate and choose the current value of core reactivity.

Xenon = ( ) 2.0% ΔK/K
Fuel temperature = ( ) 2.5% ΔK/K
Control rods = ( ) 14.0% ΔK/K
Voids = ( ) 4.5% ΔK/K

A. -5.0% ΔK/K

B. -9.0% ΔK/K

C. -14.0% ΔK/K

D. -23.0% ΔK/K

ANSWER: B.

TOPIC: 292002
KNOWLEDGE: K1.14 [2.6/2.9]
QID: B2148

A reactor scram from 100 percent steady-state power occurred 36 hours ago due to an instrument malfunction. All systems operated normally.

Given the following absolute values of reactivities added since the scram, assign a (+) or (–) as appropriate and choose the current value of core reactivity.

Xenon = ( ) 1.0% ΔK/K
Fuel temperature = ( ) 2.0% ΔK/K
Control rods = ( ) 14.0% ΔK/K
Voids = ( ) 3.0% ΔK/K

A. -8.0% ΔK/K

B. -10.0% ΔK/K

C. -14.0% ΔK/K

D. -20.0% ΔK/K

ANSWER: A.

TOPIC: 292002
KNOWLEDGE: K1.14 [2.6/2.9]
QID: B2248

Sixteen hours ago, a reactor scrammed from 100 percent steady-state power due to an instrument malfunction. All systems operated normally.

Given the following absolute values of reactivities added since the scram, assign a (+) or (–) as appropriate and choose the current value of core reactivity.

Xenon = ( ) 2.0% ΔK/K
Fuel temperature = ( ) 3.0% ΔK/K
Control rods = ( ) 12.0% ΔK/K
Voids = ( ) 4.0% ΔK/K

A. -5.0% ΔK/K

B. -7.0% ΔK/K

C. -9.0% ΔK/K

D. -11.0% ΔK/K

ANSWER: B.

TOPIC: 292002
KNOWLEDGE: K1.14 [2.6/2.9]
QID: B2348 (P2347)

Which one of the following changes will <u>decrease</u> the shutdown margin in a reactor? (Assume <u>no</u> operator actions.)

A. Depletion of fuel during reactor operation.

B. Depletion of burnable poisons during reactor operation.

C. Buildup of samarium-149 following a reactor power transient.

D. Buildup of Xenon-135 following a reactor power transient.

ANSWER: B.

TOPIC: 292002
KNOWLEDGE: K1.14 [2.6/2.9]
QID: B2448

A reactor scrammed from 100 percent steady-state power due to an instrument malfunction 30 hours ago. All systems operated normally.

Given the following absolute values of reactivities added since the scram, assign a (+) or (–) as appropriate and choose the current value of core reactivity.

Xenon = ( ) 1.5% ΔK/K
Fuel temperature = ( ) 2.5% ΔK/K
Control rods = ( ) 14.0% ΔK/K
Voids = ( ) 3.5% ΔK/K

A. -6.5% ΔK/K

B. -9.5% ΔK/K

C. -11.5% ΔK/K

D. -13.5% ΔK/K

ANSWER: A.

TOPIC: 292002
KNOWLEDGE: K1.14 [2.6/2.9]
QID: B3648 (P3647)

A reactor is initially operating at steady-state 60 percent power near the end of a fuel cycle when a fully withdrawn control rod suddenly inserts completely into the core. No operator action is taken and the plant control systems stabilize the reactor at a power level in the power range.

Compared to the initial shutdown margin (SDM), the new steady-state SDM is _____; and compared to the initial core K_{eff}, the new core K_{eff} is _____.

A. the same; smaller

B. the same; the same

C. less negative; smaller

D. less negative; the same

ANSWER: B.

TOPIC: 292002
KNOWLEDGE: K1.14 [2.6/2.9]
QID: B3748 (P3747)

A nuclear power plant has just completed a refueling outage. Based on the expected core loading, reactor engineers have predicted a control rod configuration at which the reactor will become critical during the initial reactor startup following the refueling outage. However, the burnable poisons scheduled to be loaded were inadvertently omitted.

Which one of the following describes the effect of the burnable poison omission on achieving reactor criticality during the initial reactor startup following the refueling outage?

A. The reactor will become critical before the predicted critical control rod configuration is achieved.

B. The reactor will become critical after the predicted critical control rod configuration is achieved.

C. The reactor will be unable to achieve criticality because the fuel assemblies contain insufficient positive reactivity to make the reactor critical.

D. The reactor will be unable to achieve criticality because the control rods contain insufficient positive reactivity to make the reactor critical.

ANSWER: A.

TOPIC: 292002
KNOWLEDGE: K1.14 [2.6/2.9]
QID: B4924

Reactors A and B are identical except that reactor A is operating near the beginning of a fuel cycle (BOC) and reactor B is operating near the end of a fuel cycle (EOC). Both reactors are operating at 100 percent power.

Which reactor would have the smaller K_{eff} five minutes after a reactor scram?

A. Reactor A, because the control rods will add more negative reactivity near the BOC.

B. Reactor A, because the power coefficient is more negative near the BOC.

C. Reactor B, because the control rods will add more negative reactivity near the EOC.

D. Reactor B, because the power coefficient is more negative near the EOC.

ANSWER: C.

TOPIC: 292002
KNOWLEDGE: K1.14 [2.6/2.9]
QID: B5224

A reactor was initially operating at steady-state 100 percent power when it was shut down and cooled down to 200°F over a three day period.

Given the following absolute values of reactivities added during the shutdown and cooldown, assign a (+) or (–) as appropriate and choose the current value of core reactivity.

Control rods = ( ) 12.50% ΔK/K
Voids = ( ) 3.50% ΔK/K
Xenon = ( ) 2.50% ΔK/K
Fuel temperature = ( ) 2.00% ΔK/K
Moderator temperature = ( ) 0.50% ΔK/K

A. -3.0% ΔK/K

B. -4.0% ΔK/K

C. -8.0% ΔK/K

D. -9.0% ΔK/K

ANSWER: B.

TOPIC: 292002
KNOWLEDGE: K1.14 [2.6/2.9]
QID: B6224

Reactors A and B are identical except that reactor A is operating near the beginning of a fuel cycle (BOC) and reactor B is operating near the end of a fuel cycle (EOC). Both reactors are operating at 100 percent power.

Which reactor will have the greater core K_{eff} five minutes after a reactor scram?

A. Reactor A, because complete control rod insertion will add less negative reactivity near the BOC.

B. Reactor A, because the power coefficient is less negative near the BOC.

C. Reactor B, because complete control rod insertion will add less negative reactivity near the EOC.

D. Reactor B, because the power coefficient is less negative near the EOC.

ANSWER: A.

TOPIC: 292002
KNOWLEDGE: K1.14 [2.6/2.9]
QID: B7224

A nuclear power plant was initially operating at equilibrium 100 percent power just prior to a refueling outage. The plant was shut down, refueled, restarted, and is currently operating at equilibrium 100 percent power. Assume the 100 percent power fission rate did <u>not</u> change.

Which one of the following describes the current plant status as compared to the conditions just prior to the refueling?

A. The core thermal neutron flux is greater.

B. The available shutdown margin is smaller.

C. The control rods are withdrawn farther from the core.

D. The equilibrium core Xe-135 concentration is smaller.

ANSWER: B.

TOPIC: 292003
KNOWLEDGE: K1.01 [2.9/3.0]
QID: B124

A reactor startup is in progress. Which one of the following statements describes the reactor response to control rod withdrawal when taking the reactor critical?

A. The nuclear instrumentation will take longer to stabilize at each new subcritical power level.

B. The reactor will be critical when the period and power level remain constant, with no further rod withdrawal.

C. Each complete control rod withdrawal will result in the same amount of change in subcritical power level.

D. Each control rod withdrawal results in an initial negative period followed by a strong positive period.

ANSWER: A.

TOPIC: 292003
KNOWLEDGE: K1.01 [2.9/3.0]
QID: B130

Which one of the following statements describes subcritical multiplication during a reactor startup?

A. Subcritical multiplication is the process of using source neutrons to maintain an equilibrium neutron population when K_{eff} is less than 1.

B. As K_{eff} approaches unity, a smaller change in neutron level occurs for a given change in K_{eff}.

C. The equilibrium subcritical neutron level is dependent on the source strength and the time between successive reactivity insertions.

D. As K_{eff} approaches unity, less time is required to reach the equilibrium neutron level for a given change in K_{eff}.

ANSWER: A.

TOPIC: 292003
KNOWLEDGE: K1.01 [2.9/3.0]
QID: B176

A reactor is being taken critical by periodically withdrawing control rods in equal reactivity increments. The initial K_{eff} was 0.85. Which one of the following statements describes reactor conditions as K_{eff} approaches unity?

A. The neutron level change for successive incremental rod withdrawal becomes smaller.

B. A longer period of time is required to reach an equilibrium neutron level after each rod withdrawal.

C. Each rod withdrawal will result in the reactor becoming slightly supercritical due to a "prompt jump" and then returning to a subcritical condition.

D. If the rod withdrawal is stopped for several hours, the neutron level will decrease to the neutron source level.

ANSWER: B.

TOPIC: 292003
KNOWLEDGE: K1.01 [2.9/3.0]
QID: B349

Of the following conditions, which group is necessary for subcritical multiplication to occur?

A. Neutron source, moderator, and fissionable material

B. Moderator, fission product decay, and K_{eff} less than one

C. K_{eff} less than one, gamma source, and fissionable material

D. Fissionable material, gamma source, and K_{eff} greater than one

ANSWER: A.

TOPIC: 292003
KNOWLEDGE: K1.01 [2.9/3.0]
QID: B350 (P347)

Which one of the following is a characteristic of subcritical multiplication?

A. The subcritical neutron level is directly proportional to the neutron source strength.

B. Doubling the indicated count rate by reactivity additions will reduce the margin to criticality by approximately one quarter.

C. For equal reactivity additions, it takes less time for the new equilibrium source range count rate to be reached as K_{eff} approaches unity.

D. An incremental withdrawal of any given control rod will produce an equivalent equilibrium count rate increase, whether K_{eff} is 0.88 or 0.92.

ANSWER: A.

TOPIC: 292003
KNOWLEDGE: K1.01 [2.9/3.0]
QID: B449

A reactor startup is being performed with xenon-free conditions. Rod withdrawal is stopped just prior to criticality and neutron count rate is allowed to stabilize. No additional operator actions are taken.

During the next 30 minutes, count rate will...

A. remain essentially constant.

B. decrease and stabilize, due to long-lived delayed neutron precursors.

C. decrease to its prestartup level, due to the buildup of xenon-135.

D. increase to criticality, due to long-lived delayed neutron precursors.

ANSWER: A.

TOPIC: 292003
KNOWLEDGE: K1.01 [2.9/3.0]
QID: B967 (P3149)

Which one of the following describes the purpose of a neutron source that is installed in a reactor during refueling for the third fuel cycle?

A. Ensures shutdown neutron level is large enough to be detected by nuclear instrumentation.

B. Provides additional excess reactivity to increase the length of the fuel cycle.

C. Amplifies the electrical noise fluctuations observed in source range instrumentation during shutdown.

D. Supplies the only shutdown source of neutrons available to begin a reactor startup.

ANSWER: A.

TOPIC: 292003
KNOWLEDGE: K1.01 [2.9/3.0]
QID: B1170 (P1848)

A nuclear power plant has been operating at 100 percent power for two months when a reactor scram occurs. Two months after the reactor scram, with all control rods still fully inserted, a stable count rate of 20 cps is indicated on the source range nuclear instruments.

The majority of the source range detector output is being caused by the interaction of _____ with the detector.

A. intrinsic source neutrons

B. fission gammas from previous power operation

C. fission neutrons from subcritical multiplication

D. delayed fission neutrons from previous power operation

ANSWER: C.

TOPIC: 292003
KNOWLEDGE: K1.01 [2.9/3.0]
QID: B1549 (P1549)

Which one of the following neutron sources undergoes the most significant source strength reduction during the hour immediately following a reactor scram from steady-state 100 percent power?

A. Spontaneous fission reactions

B. Photo-neutron reactions

C. Alpha-neutron reactions

D. Transuranic isotope decay

ANSWER: B.

TOPIC: 292003
KNOWLEDGE: K1.01 [2.9/3.0]
QID: B2150 (P2149)

Which one of the following is the neutron source that produces the greatest neutron flux for the first few days following a reactor scram from extended high power operations?

A. Spontaneous neutron emission from control rods.

B. Photo-neutron reactions in the moderator.

C. Spontaneous fission in the fuel.

D. Alpha-neutron reactions in the fuel.

ANSWER: B.

TOPIC: 292003
KNOWLEDGE: K1.04 [2.5/2.5]
QID: B48

Which one of the following defines the delayed neutron fraction?

A. The fraction of the total number of delayed neutrons produced from fission that are emitted from delayed neutron precursors.

B. The fraction of the total number of fast neutrons produced from fission that are emitted from delayed neutron precursors.

C. The fraction of the total number of neutrons produced from fission that are emitted from delayed neutron precursors.

D. The fraction of the total number of thermal neutrons produced from fission that are emitted from delayed neutron precursors.

ANSWER: C.

TOPIC: 292003
KNOWLEDGE: K1.04 [2.5/2.5]
QID: B351

Which one of the following describes how and why the effective delayed neutron fraction varies over core life?

A. Increases, due to the burnup of U-238.

B. Decreases, due to the buildup of Pu-239.

C. Increases, due to the buildup of Pu-239.

D. Decreases, due to the burnup of U-238.

ANSWER: B.

TOPIC: 292003
KNOWLEDGE: K1.04 [2.5/2.5]
QID: B371

Which one of the following lists the two isotopes that produce the most power in a reactor operating at 100 percent power near the end of a fuel cycle?

A. U-235 and U-238

B. Pu-241 and U-238

C. Pu-239 and U-238

D. Pu-239 and U-235

ANSWER: D.

TOPIC: 292003
KNOWLEDGE: K1.04 [2.5/2.5]
QID: B850

The effective delayed neutron fraction ($\bar{\beta}_{eff}$) can be defined in fractional form as...

A. $\frac{\text{number of neutrons born delayed}}{\text{total number of neutrons born from fission}}$

B. $\frac{\text{number of neutrons born delayed}}{\text{number of neutrons born prompt}}$

C. $\frac{\text{number of fissions caused by delayed neutrons}}{\text{total number of fissions caused by fission neutrons}}$

D. $\frac{\text{number of fissions caused by delayed neutrons}}{\text{number of fissions caused by prompt neutrons}}$

ANSWER: C.

TOPIC: 292003
KNOWLEDGE: K1.04 [2.5/2.5]
QID: B1050

Compared to the effective delayed neutron fraction (β_{eff}), the delayed neutron fraction (β)...

A. changes due to fuel depletion, whereas β_{eff} will remain constant over core life.

B. is based on a finite-sized reactor, whereas β_{eff} is based on an infinite-sized reactor.

C. describes the fraction of fission neutrons born delayed, whereas β_{eff} describes the fraction of fissions caused by delayed neutrons.

D. considers only the decay constant of the longest lived delayed neutron precursors, whereas β_{eff} considers the weighted average of all the decay constants.

ANSWER: C.

TOPIC: 292003
KNOWLEDGE: K1.04 [2.5/2.5]
QID: B1172 (P2272)

A reactor is operating at 100 percent power near the end of a fuel cycle. The greatest contribution to core heat production is being provided by the fission of...

A. U-235 and U-238.

B. U-238 and Pu-239.

C. U-235 and Pu-239.

D. U-238 and Pu-241.

ANSWER: C.

TOPIC: 292003
KNOWLEDGE: K1.04 [2.5/2.5]
QID: B1251

The effective delayed neutron fraction (β_{eff}) takes into account two factors not considered in calculating the delayed neutron fraction (β). These factors consider that:

Delayed neutrons are _____ likely to cause fast fission than prompt neutrons; and
Delayed neutrons are _____ likely to leak from the core than prompt neutrons.

A. less; more

B. less; less

C. more; more

D. more; less

ANSWER: B.

TOPIC: 292003
KNOWLEDGE: K1.04 [2.5/2.5]
QID: B2250 (P2249)

Which one of the following distributions of fission percentages occurring in a reactor will result in the largest effective delayed neutron fraction?

	U-235	U-238	Pu-239
A.	90%	7%	3%
B.	80%	6%	14%
C.	70%	7%	23%
D.	60%	6%	34%

ANSWER: A.

TOPIC: 292003
KNOWLEDGE: K1.04 [2.5/2.5]
QID: B2349 (P2348)

Which one of the following distributions of fission percentages occurring in a reactor will result in the smallest effective delayed neutron fraction?

	U-235	U-238	Pu-239
A.	90%	7%	3%
B.	80%	6%	14%
C.	70%	7%	23%
D.	60%	6%	34%

ANSWER: D.

TOPIC: 292003
KNOWLEDGE: K1.04 [2.5/2.5]
QID: B2469

A refueling outage has just been completed in which the entire core was offloaded and replaced with new fuel. A reactor startup has been performed to mark the beginning of the next fuel cycle and power is being increased to 100 percent.

Which one of the following pairs of reactor fuels will be providing the greatest contribution to core heat production when the reactor reaches 100 percent power?

A. U-235 and U-238

B. U-238 and Pu-239

C. U-235 and Pu-239

D. U-235 and Pu-241

ANSWER: A.

TOPIC: 292003
KNOWLEDGE: K1.04 [2.5/2.5]
QID: B2950 (P2948)

A nuclear power plant is operating at steady-state 50 percent power when a control rod is ejected from the core. Which one of the following distributions of fission percentages in the core would result in the shortest reactor period? (Assume the reactivity worth of the ejected control rod is the same for each distribution.)

	U-235	U-238	Pu-239
A.	90%	8%	2%
B.	80%	7%	13%
C.	70%	7%	23%
D.	60%	8%	32%

ANSWER: D.

TOPIC: 292003
KNOWLEDGE: K1.04 [2.5/2.5]
QID: B4425 (P4425)

The following data is given for the fuel in an operating reactor:

Nuclide	Delayed Neutron Fraction	Fraction of Total Fuel Composition	Fraction of Total Fission Rate
U-235	0.0065	0.03	0.73
U-238	0.0148	0.96	0.07
Pu-239	0.0021	0.01	0.20

What is the delayed neutron fraction for this reactor?

A. 0.0052

B. 0.0054

C. 0.0062

D. 0.0068

ANSWER: C.

TOPIC: 292003
KNOWLEDGE: K1.04 [2.5/2.5]
QID: B5425 (P5425)

The following data is given for the fuel in an operating reactor:

Nuclide	Delayed Neutron Fraction	Fraction of Total Fuel Composition	Fraction of Total Fission Rate
U-235	0.0065	0.023	0.63
U-238	0.0148	0.965	0.07
Pu-239	0.0021	0.012	0.30

What is the delayed neutron fraction for this reactor?

A. 0.0052

B. 0.0058

C. 0.0072

D. 0.0078

ANSWER: B.

TOPIC: 292003
KNOWLEDGE: K1.04 [2.5/2.5]
QID: B5725 (P5725)

For an operating reactor, the effective delayed neutron fraction may differ from the delayed neutron fraction because, compared to prompt neutrons, delayed neutrons...

A. are less likely to leak out of the reactor core, and are less likely to cause fast fission.

B. are less likely to cause fast fission, and require more time to complete a neutron generation.

C. require more time to complete a neutron generation, and spend less time in the resonance absorption energy region.

D. spend less time in the resonance absorption energy region, and are less likely to leak out of the reactor core.

ANSWER: A.

TOPIC: 292003
KNOWLEDGE: K1.04 [2.5/2.5]
QID: B5825 (P5825)

Given the following data for a reactor:

- The average delayed neutron fraction is 0.0068.
- The effective delayed neutron fraction is 0.0065.

The above data indicates that this reactor is operating near the _____ of a fuel cycle; and a typical delayed neutron is _____ likely than a typical prompt neutron to cause another fission in this reactor.

A. beginning; less

B. beginning; more

C. end; less

D. end; more

ANSWER: A.

TOPIC: 292003
KNOWLEDGE: K1.04 [2.5/2.5]
QID: B6525 (P6525)

Which one of the following is the major cause for the change in the delayed neutron fraction from the beginning to the end of a fuel cycle?

A. Burnup of the burnable poisons.

B. Changes in the fuel composition.

C. Buildup of fission product poisons.

D. Shift in the core axial power distribution.

ANSWER: B.

TOPIC: 292003
KNOWLEDGE: K1.04 [2.5/2.5]
QID: B7025 (P7025)

Given the following data for the fuel in an operating reactor:

Nuclide	Delayed Neutron Fraction	Cross Section for Thermal Fission	Fraction of Total Fission Rate
U-235	0.0065	531 barns	0.58
U-238	0.0148	< 1 barn	0.06
Pu-239	0.0021	743 barns	0.32
Pu-241	0.0049	1009 barns	0.04

What is the delayed neutron fraction for this reactor?

A. 0.0044

B. 0.0055

C. 0.0063

D. 0.0071

ANSWER: B.

TOPIC: 292003
KNOWLEDGE: K1.04 [2.5/2.5]
QID: B7325 (P7325)

A nuclear reactor is operating at steady-state 100 percent power in the middle of a fuel cycle. Which one of the following changes would cause the core effective delayed neutron fraction to increase?

A. The fast nonleakage factor increases.

B. The fast nonleakage factor decreases.

C. The thermal utilization factor increases.

D. The thermal utilization factor decreases.

ANSWER: B.

TOPIC: 292003
KNOWLEDGE: K1.05 [3.7/3.7]
K1.06 [3.7/3.7]
QID: B3551 (P3548)

Reactors A and B are identical except that the reactors are operating at different times in core life. The reactor A effective delayed neutron fraction is 0.007, and the reactor B effective delayed neutron fraction is 0.005. Both reactors are currently subcritical with neutron flux level stable in the source range.

Given:

Reactor A K_{eff} = 0.999
Reactor B K_{eff} = 0.998

If positive 0.003 $\Delta K/K$ is suddenly added to each reactor, how will the resulting stable periods compare? (Consider only the reactor response while power is below the point of adding heat.)

A. Reactor A stable period will be shorter because it will have the higher positive reactivity in the core.

B. Reactor B stable period will be shorter because it has the smaller effective delayed neutron fraction.

C. Reactors A and B will have the same stable period because both reactors will remain subcritical.

D. Reactors A and B will have the same stable period because both reactors received the same amount of positive reactivity.

ANSWER: A.

TOPIC: 292003
KNOWLEDGE: K1.06 [3.7/3.7]
QID: B250

Without delayed neutrons in the neutron cycle, when positive reactivity is added to a critical reactor, the reactor will...

A. experience a prompt jump in power level followed by a decrease to the initial power level.

B. experience a rapid but controllable power increase.

C. begin an uncontrollable rapid power increase.

D. not be able to attain criticality.

ANSWER: C.

TOPIC: 292003
KNOWLEDGE: K1.06 [3.7/3.7]
QID: B451 (P47)

A small amount of positive reactivity is added to a reactor that is critical in the source range. The amount of reactivity added is much less than the effective delayed neutron fraction.

Which one of the following will have the most <u>significant</u> effect on the magnitude of the stable reactor period achieved for this reactivity addition while the reactor is in the source range?

A. Prompt neutron lifetime

B. Fuel temperature coefficient

C. Moderator temperature coefficient

D. Effective delayed neutron precursor decay constant

ANSWER: D.

TOPIC: 292003
KNOWLEDGE: K1.06 [3.7/3.7]
QID: B1250 (P1548)

Two reactors are identical except that reactor A is near the end of a fuel cycle and reactor B is near the beginning of a fuel cycle. Both reactors are critical at 1.0×10^{-5} percent power.

If the same amount of positive reactivity is added to each reactor at the same time, the point of adding heat will be reached first by reactor _____ because it has a _____ effective delayed neutron fraction.

A. A; smaller

B. A; larger

C. B; smaller

D. B; larger

ANSWER: A.

TOPIC: 292003
KNOWLEDGE: K1.06 [3.7/3.7]
QID: B1349 (P1248)

Two reactors are identical except that reactor A is near the end of a fuel cycle and reactor B is near the beginning of a fuel cycle. Both reactors are operating at 100 percent power when a reactor scram occurs at the same time on each reactor.

If <u>no</u> operator action is taken and the reactor systems for both reactors respond identically to the scram, reactor A will attain a negative _____ second stable period; and reactor B will attain a negative _____ second stable period.

A. 80; 56

B. 80; 80

C. 56; 56

D. 56; 80

ANSWER: B.

TOPIC: 292003
KNOWLEDGE: K1.06 [3.7/3.7]
QID: B1649 (P1649)

Two reactors are identical except that reactor A is near the end of core life and reactor B is near the beginning of core life. Both reactors are operating at 100 percent power when a reactor scram occurs at the same time on each reactor.

If no operator action is taken and the reactor systems for both reactors respond identically to the scram, a power level of 10^{-5} percent will be reached first by reactor _____ because it has a _____ effective delayed neutron fraction.

A. A; larger

B. B; larger

C. A; smaller

D. B; smaller

ANSWER: C.

TOPIC: 292003
KNOWLEDGE: K1.06 [3.7/3.7]
QID: B1751 (P1749)

Which one of the following is the reason that delayed neutrons are so effective at controlling the rate of reactor power changes?

A. Delayed neutrons make up a large fraction of the fission neutrons compared to prompt neutrons.

B. Delayed neutrons have a long mean lifetime compared to prompt neutrons.

C. Delayed neutrons produce a large amount of fast fission compared to prompt neutrons.

D. Delayed neutrons are born with high kinetic energy compared to prompt neutrons.

ANSWER: B.

TOPIC: 292003
KNOWLEDGE: K1.06 [3.7/3.7]
QID: B1950 (P48)

During a fuel cycle, plutonium isotopes are produced with delayed neutron fractions that are _____ than the delayed neutron fractions for uranium isotopes, thereby causing reactor power transients to be _____ near the end of a fuel cycle.

A. larger; slower

B. larger; faster

C. smaller; slower

D. smaller; faster

ANSWER: D.

TOPIC: 292003
KNOWLEDGE: K1.06 [3.7/3.7]
QID: B2450 (P348)

Which one of the following statements describes the effect of changes in the delayed neutron fraction from the beginning of a fuel cycle (BOC) to the end of a fuel cycle (EOC)?

A. A given reactivity addition to a shutdown reactor at EOC yields a larger change in shutdown margin (SDM) than at BOC.

B. A given reactivity addition to a shutdown reactor at EOC yields a smaller change in SDM than at BOC.

C. A given reactivity addition to an operating reactor at EOC results in a longer reactor period than at BOC.

D. A given reactivity addition to an operating reactor at EOC results in a shorter reactor period than at BOC.

ANSWER: D.

TOPIC: 292003
KNOWLEDGE: K1.06 [3.7/3.7]
QID: B2651 (P1149)

Delayed neutrons are important for reactor control because...

A. they are produced with a higher average kinetic energy than prompt neutrons.

B. they prevent the moderator temperature coefficient from becoming positive.

C. they are the largest fraction of the neutrons produced from fission.

D. they greatly extend the average lifetime of each neutron generation.

ANSWER: D.

TOPIC: 292003
KNOWLEDGE: K1.06 [3.7/3.7]
QID: B2850 (P2849)

Two reactors are identical except that reactor A is near the beginning of core life and reactor B is near the end of core life. Both reactors are critical at 10^{-5} percent power.

If the same amount of positive reactivity is added to each reactor at the same time, the point of adding heat will be reached first by reactor _____ because it has a _____ effective delayed neutron fraction.

A. A; smaller

B. A; larger

C. B; smaller

D. B; larger

ANSWER: C.

TOPIC: 292003
KNOWLEDGE: K1.06 [3.7/3.7]
QID: B3249 (P3248)

Two reactors are identical except that reactor A is near the end of core life and reactor B is near the beginning of core life. Both reactors are operating at 100 percent power when a reactor scram occurs at the same time on each reactor. No operator action is taken and the reactor systems for both reactors respond identically to the scram.

Ten minutes after the scram, the greater thermal neutron flux will exist in reactor _____ because it has a _____ effective delayed neutron fraction.

A. A; larger

B. B; larger

C. A; smaller

D. B; smaller

ANSWER: B.

TOPIC: 292003
KNOWLEDGE: K1.06 [3.7/3.7]
QID: B3650 (P3648)

Two reactors are identical except that reactor A is near the beginning of core life and reactor B is near the end of core life. Both reactors are operating at 100 percent power when a reactor scram occurs at the same time on each reactor. No operator action is taken and the reactor systems for both reactors respond identically to the scram.

Ten minutes after the scram, the greater thermal neutron flux will exist in reactor _____ because it has a _____ effective delayed neutron fraction.

A. A; larger

B. B; larger

C. A; smaller

D. B; smaller

ANSWER: A.

TOPIC: 292003
KNOWLEDGE: K1.06 [3.7/3.7]
QID: B3749 (P3748)

A step positive reactivity addition of 0.001 ΔK/K is made to a reactor with a stable neutron flux and an initial K_{eff} of 0.99. Consider the following two cases:

Case 1: The reactor is near the beginning of a fuel cycle.
Case 2: The reactor is near the end of a fuel cycle.

Assume the initial neutron flux is the same for each case.

Which one of the following correctly compares the prompt jump in neutron flux levels and the final stable neutron flux levels for the two cases?

A. The prompt jump will be greater for case 1, but the final stable neutron flux level will be the same for both cases.

B. The prompt jump will be greater for case 2, but the final stable neutron flux level will be the same for both cases.

C. The prompt jump will be the same for both cases, but the final stable neutron flux level will be greater for case 1.

D. The prompt jump will be the same for both cases, but the final stable neutron flux level will be greater for case 2.

ANSWER: B.

TOPIC: 292003
KNOWLEDGE: K1.06 [3.7/3.7]
QID: B5525 (P5525)

Which characteristic of delayed neutrons is primarily responsible for enhancing the stability of a reactor following a reactivity change?

A. They are born at a lower average energy than prompt neutrons.

B. They are more likely to experience resonance absorption than prompt neutrons.

C. They comprise a smaller fraction of the total neutron flux than prompt neutrons.

D. They require more time to be produced following a fission event than prompt neutrons.

ANSWER: D.

TOPIC: 292003
KNOWLEDGE: K1.06 [3.7/3.7]
QID: B5925 (P5925)

A reactor is initially critical at a stable power level below the point of adding heat (POAH) and remains below the POAH for the following two cases:

Case 1: An operator adds positive 1.0×10^{-4} ΔK/K reactivity to the reactor.
Case 2: An operator adds negative 1.0×10^{-4} ΔK/K reactivity to the reactor.

The time required for reactor power to change by a factor of 10 will be greater in case _____ because delayed neutrons are more effective at slowing reactor power changes when reactor power is _____.

A. 1; increasing

B. 1; decreasing

C. 2; increasing

D. 2; decreasing

ANSWER: D.

TOPIC: 292003
KNOWLEDGE: K1.06 [3.7/3.7]
QID: B6225 (P6225)

Two identical reactors, A and B, are critical at 1.0×10^{-8} percent power near the beginning of a fuel cycle. Simultaneously, positive 0.001 ΔK/K is added to reactor A, and negative 0.001 ΔK/K is added to reactor B. One minute later, which reactor, if any, will have the shorter period and why?

A. Reactor A, because delayed neutrons are less effective at slowing down power changes when the fission rate is increasing.

B. Reactor B, because delayed neutrons are less effective at slowing down power changes when the fission rate is decreasing.

C. The periods in both reactors will be the same because their effective delayed neutron fractions are the same.

D. The periods in both reactors will be the same because the absolute values of the reactivity additions are the same.

ANSWER: A.

TOPIC: 292003
KNOWLEDGE: K1.06 [3.7/3.7]
QID: B6325 (P6325)

The following data is given for the fuel in an operating reactor just prior to a refueling shutdown.

Nuclide	Delayed Neutron Fraction	Fraction of Total Fission Rate
U-235	0.0065	0.64
U-238	0.0148	0.07
Pu-239	0.0021	0.29

During the refueling, one-third of the fuel assemblies were offloaded and replaced with new fuel assemblies consisting of uranium having an average U-235 enrichment of 3.5 percent by weight.

Which one of the following describes how the above data will change as a result of completing the refueling outage?

A. The delayed neutron fraction for U-235 will decrease.

B. The delayed neutron fraction for Pu-239 will decrease.

C. The fraction of the total fission rate attributed to U-235 will increase.

D. The fraction of the total fission rate attributed to Pu-239 will increase.

ANSWER: C.

TOPIC: 292003
KNOWLEDGE: K1.07 [3.3/3.3]
QID: B251

As a reactor core ages, the amount of positive reactivity required to make the reactor prompt critical will _____ because the effective delayed neutron fraction _____.

A. increase; decreases

B. decrease; increases

C. decrease; decreases

D. increase; increases

ANSWER: C.

TOPIC: 292003
KNOWLEDGE: K1.07 [3.3/3.3]
QID: B551

A reactor is operating at 50 percent power with the following conditions:

Power defect	=	-0.03% ΔK/K
Shutdown margin	=	-0.05% ΔK/K
Effective delayed neutron fraction	=	0.007
Effective prompt neutron fraction	=	0.993

How much positive reactivity must be added to take this reactor prompt critical?

A. 0.03% ΔK/K

B. 0.05% ΔK/K

C. 0.7% ΔK/K

D. 0.993% ΔK/K

ANSWER: C.

TOPIC: 292003
KNOWLEDGE: K1.07 [3.3/3.3]
QID: B664

A critical reactor will become prompt critical if positive reactivity is added equal to the effective...

A. delayed neutron decay constant.

B. delayed neutron fraction.

C. prompt neutron decay constant.

D. prompt neutron fraction.

ANSWER: B.

TOPIC: 292003
KNOWLEDGE: K1.07 [3.3/3.3]
QID: B950

A reactor is stable at 75 percent power with the following conditions:

Total control rod worth	=	-0.0753 ΔK/K
Shutdown margin	=	-0.0042 ΔK/K
Effective delayed neutron fraction	=	0.0058
Effective prompt neutron fraction	=	0.9942

How much positive reactivity must be added to make the reactor prompt critical?

A. 0.0042 ΔK/K

B. 0.0058 ΔK/K

C. 0.0753 ΔK/K

D. 0.9942 ΔK/K

ANSWER: B.

TOPIC: 292003
KNOWLEDGE: K1.07 [3.3/3.3]
QID: B1150 (P1948)

Positive reactivity is continuously added to a critical reactor. Which one of the following values of K_{eff} will first result in a prompt critical reactor?

A. 1.0001

B. 1.001

C. 1.01

D. 1.1

ANSWER: C.

TOPIC: 292003
KNOWLEDGE: K1.07 [3.3/3.3]
QID: B1850

A reactor is critical at 10^{-5} percent power with a xenon-free core. The operator continuously withdraws control rods until a 60-second reactor period is reached, and then stops control rod motion.

When rod withdrawal is stopped, reactor period will immediately...

A. stabilize at 60 seconds until power reaches the point of adding heat (POAH).

B. lengthen and then stabilize at a value greater than 60 seconds until power reaches the POAH.

C. shorten, and then slowly and continuously lengthen until power reaches the POAH.

D. lengthen, and then slowly and continuously shorten until power reaches the POAH.

ANSWER: B.

TOPIC: 292003
KNOWLEDGE: K1.07 [3.3/3.3]
QID: B2051

A reactor with a xenon-free core is critical at the point of adding heat. Reactor vessel temperature is 175°F. The operator inserts control rods until a negative 100-second period is attained, and then stops control rod motion.

When rod motion is stopped, reactor period will immediately _____ until power approaches the equilibrium subcritical multiplication source range level, where it will approach _____.

A. stabilize at negative 100 seconds; infinity

B. stabilize at negative 100 seconds; zero

C. lengthen and then stabilize; infinity

D. lengthen and then stabilize; zero

ANSWER: C.

TOPIC: 292003
KNOWLEDGE: K1.07 [3.3/3.3]
QID: B2550 (P2549)

A reactor was stable at 80 percent power when the operator withdrew a control rod continuously for 2 seconds. Which one of the following affects the amount of "prompt jump" increase in reactor power for the control rod withdrawal?

A. The total control rod worth

B. The differential control rod worth

C. The duration of control rod withdrawal

D. The magnitude of the fuel temperature coefficient

ANSWER: B.

TOPIC: 292003
KNOWLEDGE: K1.07 [3.3/3.3]
QID: B2951 (P2949)

A reactor is operating at steady-state 75 percent power with the following conditions:

Power defect	=	-0.0185 ΔK/K
Shutdown margin	=	-0.0227 ΔK/K
Effective delayed neutron fraction	=	0.0061
Effective prompt neutron fraction	=	0.9939

How much positive reactivity must be added to make the reactor prompt critical?

A. 0.0061 ΔK/K

B. 0.0185 ΔK/K

C. 0.0227 ΔK/K

D. 0.9939 ΔK/K

ANSWER: A.

TOPIC: 292003
KNOWLEDGE: K1.07 [3.3/3.3]
QID: B3250 (P3249)

Refer to the partially labeled reactor response curve shown below for a reactor that was initially stable in the source range. Both axes have linear scales. A small amount of positive reactivity was added at time = 0 sec.

The response curve shows _____ versus time for a reactor that was initially _____.

A. reactor period; subcritical

B. reactor period; critical

C. reactor fission rate; subcritical

D. reactor fission rate; critical

ANSWER: C.

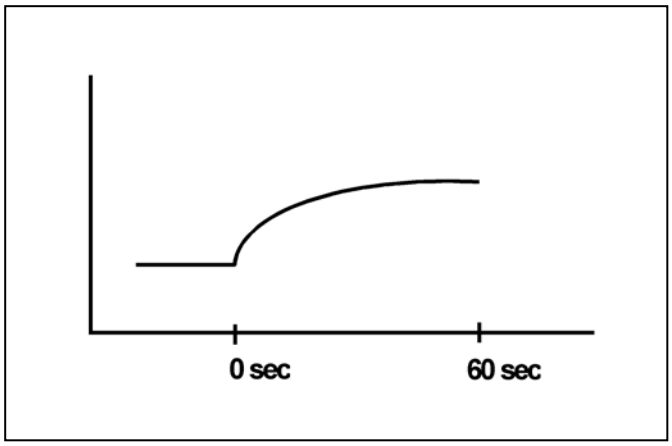

TOPIC: 292003
KNOWLEDGE: K1.07 [3.3/3.3]
QID: B3351 (P549)

Which one of the following describes a condition in which a reactor is prompt critical?

A. A very long reactor period makes reactor control very sluggish and unresponsive.

B. Fissions are occurring so rapidly that the effective delayed neutron fraction approaches zero.

C. Any increase in reactor power requires a reactivity addition equal to the fraction of prompt neutrons in the core.

D. The net positive reactivity in the core is greater than or equal to the magnitude of the effective delayed neutron fraction.

ANSWER: D.

TOPIC: 292003
KNOWLEDGE: K1.07 [3.3/3.3]
QID: B3450 (P3449)

Two reactors are critical at the same power level well below the point of adding heat. The reactors are identical except that reactor A is near the beginning of a fuel cycle (BOC) and reactor B is near the end of a fuel cycle (EOC).

If a step addition of positive 0.001 $\Delta K/K$ is added to each reactor, the size of the prompt jump in power level observed in reactor B (EOC) will be _____ than in reactor A (BOC); and the stable reactor period observed in reactor B (EOC) will be _____ than in reactor A (BOC). (Assume the power level in each reactor remains below the point of adding heat.)

A. smaller; longer

B. smaller; shorter

C. larger; longer

D. larger; shorter

ANSWER: D.

TOPIC: 292003
KNOWLEDGE: K1.07 (3.3/3.3)
QID: B3651 (P3649)

Refer to the partially labeled reactor response curve shown below for a reactor that was initially subcritical in the source range and remained below the point of adding heat. A small amount of positive reactivity was added at time = 0 sec.

The response curve shows _____ versus time for a reactor that is currently (at time = 60 sec) _____.

A. reactor period; exactly critical

B. reactor period; supercritical

C. reactor fission rate; exactly critical

D. reactor fission rate; supercritical

ANSWER: D.

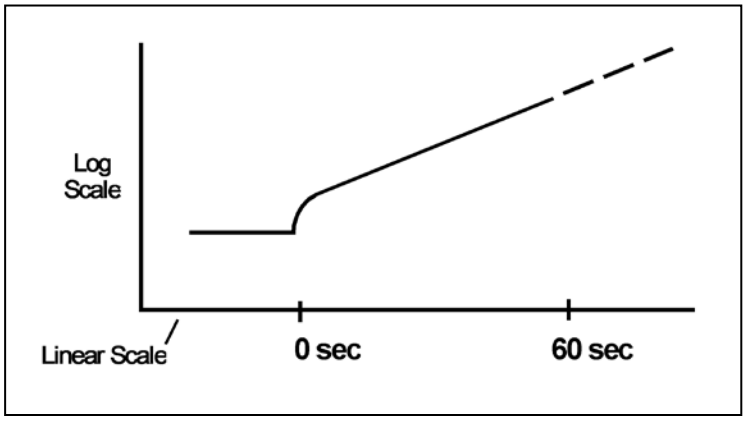

TOPIC: 292003
KNOWLEDGE: K1.07 [3.3/3.3]
QID: B3750 (P3749)

A reactor is operating at equilibrium 75 percent power with the following conditions:

Total power defect	=	-0.0176 ΔK/K
Shutdown margin	=	-0.0234 ΔK/K
Effective delayed neutron fraction	=	0.0067
Effective prompt neutron fraction	=	0.9933

How much positive reactivity must be added to make the reactor prompt critical?

A. 0.0067 ΔK/K

B. 0.0176 ΔK/K

C. 0.0234 ΔK/K

D. 0.9933 ΔK/K

ANSWER: A.

TOPIC: 292003
KNOWLEDGE: K1.08 [2.7/2.8]
QID: B49

A reactor is initially critical with a stable source range count rate of 100 cps. Sufficient positive reactivity is added to establish a 120-second period. How much time will it take for the count rate to increase to 10,000 cps with no additional operator action?

A. 1.2 minutes

B. 4.0 minutes

C. 9.2 minutes

D. 15.8 minutes

ANSWER: C.

TOPIC: 292003
KNOWLEDGE: K1.08 [2.7/2.8]
QID: B127

A reactor is operating at a very low power level when a control rod is fully inserted, resulting in a stable negative 80-second period. If the initial power level was 120 watts, what will the approximate reactor power level be two minutes after rod insertion stops?

A. 27 watts

B. 32 watts

C. 49 watts

D. 54 watts

ANSWER: A.

TOPIC: 292003
KNOWLEDGE: K1.08 [2.7/2.8]
QID: B249

During a reactor startup, the intermediate range monitor readings increased from 30 percent to 65 percent in 2 minutes. What was the average reactor period during the power increase?

A. 357 seconds

B. 173 seconds

C. 155 seconds

D. 120 seconds

ANSWER: C.

TOPIC: 292003
KNOWLEDGE: K1.08 [2.7/2.8]
QID: B851

If reactor power changes from 10^{-5} percent to 10^{-6} percent in 5 minutes, the average reactor period is:

A. negative 80 seconds.

B. positive 80 seconds.

C. negative 130 seconds.

D. positive 130 seconds.

ANSWER: C.

TOPIC: 292003
KNOWLEDGE: K1.08 [2.7/2.8]
QID: B1252

During a continuous rod withdrawal accident, reactor power increased from 387 MW to 553 MW in 10 seconds. What was the average reactor period for this power increase?

A. 3 seconds

B. 24 seconds

C. 28 seconds

D. 35 seconds

ANSWER: C.

TOPIC: 292003
KNOWLEDGE: K1.08 [2.7/2.8]
K1.05 [3.7/3.7]
QID: B1651

During a reactor startup, the intermediate range monitor readings increased from 30 percent to 50 percent in 2 minutes. What was the average reactor period during the power increase?

A. 357 seconds

B. 235 seconds

C. 155 seconds

D. 61 seconds

ANSWER: B.

TOPIC: 292003
KNOWLEDGE: K1.08 [2.7/2.8]
QID: B2351

During a reactor startup, the intermediate range monitor readings increased from 20 percent to 40 percent in 2 minutes. What was the average reactor period during the power increase?

A. 173 seconds

B. 235 seconds

C. 300 seconds

D. 399 seconds

ANSWER: A.

TOPIC: 292003
KNOWLEDGE: K1.08 [2.7/2.8]
QID: B2751 (P2748)

A reactor is critical at 1.0 x 10^{-8} percent power during a reactor startup. $\bar{\beta}_{eff}$ for this reactor is 0.0072. Which one of the following is the approximate amount of positive reactivity that must be added to the core by control rod withdrawal to initiate a reactor power increase toward the point of adding heat with a stable reactor period of 26 seconds?

A. 0.2% ΔK/K

B. 0.5% ΔK/K

C. 1.0% ΔK/K

D. 2.0% ΔK/K

ANSWER: A.

TOPIC: 292003
KNOWLEDGE: K1.08 [2.7/2.8]
QID: B3151 (P3148)

A reactor is being started for the first time following a refueling outage. Reactor Engineering has determined that during the upcoming fuel cycle, $\bar{\beta}_{eff}$ will range from a maximum of 0.007 to a minimum of 0.005.

Once the reactor becomes critical, control rods are withdrawn to increase reactivity by 0.1% ΔK/K. Assuming <u>no</u> other reactivity additions, what will the stable reactor period be for this reactor until the point of adding heat is reached?

A. 20 seconds

B. 40 seconds

C. 60 seconds

D. 80 seconds

ANSWER: C.

TOPIC: 292003
KNOWLEDGE: K1.08 [2.7/2.8]
QID: B3451 (P3467)

A reactor is critical well below the point of adding heat during a plant startup. A small amount of positive reactivity is then added to the core, and a stable positive reactor period is established.

With the stable positive reactor period, the following power levels are observed:

Time	Power Level
0 sec	3.16×10^{-7} percent
90 sec	1.0×10^{-5} percent

Which one of the following will be the reactor power level at time = 120 seconds?

A. 3.16×10^{-5} percent

B. 5.0×10^{-5} percent

C. 6.32×10^{-5} percent

D. 1.0×10^{-4} percent

ANSWER: A.

TOPIC: 292003
KNOWLEDGE: K1.08 [2.7/2.8]
QID: B3851

A reactor is critical in the source range during the initial reactor startup immediately following a refueling outage. The effective delayed neutron fraction is 0.007. The operator adds positive reactivity to establish a stable positive 60-second reactor period.

Later in core life, with an effective delayed neutron fraction of 0.005, what will be the approximate stable reactor period after an addition of the same amount of positive reactivity?

A. 28 seconds

B. 32 seconds

C. 36 seconds

D. 40 seconds

ANSWER: D.

TOPIC: 292003
KNOWLEDGE: K1.08 [2.7/2.8]
QID: B4625

During a reactor startup, source range count rate is observed to double every 30 seconds with <u>no</u> operator action. Which one of the following is the approximate reactor period?

A. 80 seconds

B. 67 seconds

C. 56 seconds

D. 43 seconds

ANSWER: D.

TOPIC: 292003
KNOWLEDGE: K1.08 [2.7/2.8]
QID: B5025

A reactor has a stable positive period of 140 seconds with core neutron level currently in the source range.

Given the following:

Initial reactor coolant temperature is 150°F.
Moderator temperature coefficient is -0.5×10^{-4} ΔK/K/°F.
Effective delayed neutron fraction is 0.006.

If the reactor coolant is allowed to heat up, at what approximate reactor coolant temperature will the reactor period reach infinity? (Ignore any reactivity effects from changes in fission product poisons and fuel temperature.)

A. 151°F

B. 158°F

C. 200°F

D. 230°F

ANSWER: B.

TOPIC: 292003
KNOWLEDGE: K1.08 [2.7/2.8]
QID: B6825 (P6825)

Given the following stable initial conditions for a reactor:

Power level = 1.0×10^{-8} percent
K_{eff} = 0.999
Core $\bar{\beta}_{eff}$ = 0.006

What will the stable reactor period be following an addition of positive 0.15% $\Delta K/K$ reactivity to the reactor? (Assume the stable reactor period occurs before the reactor reaches the point of adding heat.)

A. 30 seconds

B. 50 seconds

C. 80 seconds

D. 110 seconds

ANSWER: D.

TOPIC: 292003
KNOWLEDGE: K1.08 [2.7/2.8]
QID: B7125

Given the following stable initial conditions for a reactor:

Power level = 1.0×10^{-8} percent
K_{eff} = 0.999
Core $\bar{\beta}_{eff}$ = 0.006

What will the stable reactor period be following an addition of positive 0.2% ΔK/K reactivity to the reactor? (Assume the stable reactor period occurs before the reactor reaches the point of adding heat.)

A. 20 seconds

B. 50 seconds

C. 80 seconds

D. 110 seconds

ANSWER: B.

TOPIC: 292003
KNOWLEDGE: K1.09 [2.5/2.6]
QID: B50

During a reactor startup, the reactor is critical at 3,000 cps. A control rod is then notched out, resulting in a stable doubling time of 85 seconds. How much time is required for the reactor to reach 888,000 cps?

A. 341 seconds

B. 483 seconds

C. 697 seconds

D. 965 seconds

ANSWER: C.

TOPIC: 292003
KNOWLEDGE: K1.09 [2.5/2.6]
QID: B352

If reactor power increases at a constant rate from 50 kW to 370 kW in 2 minutes, what is the approximate doubling time?

A. 42 seconds

B. 60 seconds

C. 86 seconds

D. 120 seconds

ANSWER: A.

TOPIC: 292003
KNOWLEDGE: K1.09 [2.5/2.6]
QID: B1451

During a startup, a reactor has a stable doubling time of 115.2 seconds. What is the approximate reactor period?

A. 56 seconds

B. 80 seconds

C. 126 seconds

D. 166 seconds

ANSWER: D.

TOPIC: 292003
KNOWLEDGE: K1.09 [2.5/2.6]
QID: B5125

A reactor is initially critical in the source range during a reactor startup when a control rod is notched inward. Reactor period stabilizes at -180 seconds. Assuming reactor period remains constant, how long will it take for source range count rate to decrease by one-half?

A. 90 seconds

B. 125 seconds

C. 180 seconds

D. 260 seconds

ANSWER: B.

TOPIC: 292004
KNOWLEDGE: K1.01 [3.2/3.2]
QID: B252

The moderator temperature coefficient describes a change in _____ resulting from a change in _____.

A. reactivity; moderator temperature

B. K_{eff}; moderator temperature

C. moderator temperature; reactivity

D. moderator temperature; K_{eff}

ANSWER: A.

TOPIC: 292004
KNOWLEDGE: K1.02 [2.5/2.6]
QID: B651

A reactor is currently near the end of its fuel cycle and will be refueled next month. In comparison to the current moderator temperature coefficient (MTC), the MTC after refueling will be...

A. less negative at all coolant temperatures.

B. more negative at all coolant temperatures.

C. less negative below approximately 350°F coolant temperature and more negative above approximately 350°F coolant temperature.

D. more negative below approximately 350°F coolant temperature and less negative above approximately 350°F coolant temperature.

ANSWER: B.

TOPIC: 292004
KNOWLEDGE: K1.02 [2.5/2.6]
QID: B752

A reactor is operating at 100 percent power following a refueling outage. In comparison to the current moderator temperature coefficient (MTC), the MTC just prior to the refueling was...

A. more negative below approximately 350°F coolant temperature and less negative above approximately 350°F coolant temperature.

B. less negative below approximately 350°F coolant temperature and more negative above approximately 350°F coolant temperature.

C. more negative at all coolant temperatures.

D. less negative at all coolant temperatures.

ANSWER: D.

TOPIC: 292004
KNOWLEDGE: K1.02 [2.5/2.6]
QID: B852

Which one of the following conditions will cause the moderator temperature coefficient (MTC) to become more negative? (Consider only the direct effect of the indicated change on MTC.)

A. Control rods are inserted from 50 percent rod density to 75 percent rod density.

B. Fuel temperature decreases from 1,500°F to 1,200°F.

C. Recirculation flow increases by 10 percent.

D. Moderator temperature decreases from 500°F to 450°F.

ANSWER: A.

TOPIC: 292004
KNOWLEDGE: K1.02 [2.5/2.6]
QID: B1152

Which one of the following describes the change in the moderator temperature coefficient (MTC) of reactivity over core life? (Assume 100 percent power for all cases.)

A. Control rod withdrawal results in increased thermal neutron utilization, which results in a less negative MTC at end of fuel cycle (EOC).

B. Fission product poison buildup results in decreased thermal neutron utilization, which results in a more negative MTC at EOC.

C. Burnup of U-235 results in decreased thermal neutron utilization, which results in a more negative MTC at EOC.

D. Decreased voiding in the core results in increased thermal neutron utilization, which results in a less negative MTC at EOC.

ANSWER: A.

TOPIC: 292004
KNOWLEDGE: K1.02 [2.5/2.6]
QID: B1253

The moderator temperature coefficient of reactivity generally becomes _____ negative over core life because the utilization of thermal neutrons _____.

A. more; decreases

B. less; decreases

C. more; increases

D. less; increases

ANSWER: D.

TOPIC: 292004
KNOWLEDGE: K1.02 [2.5/2.6]
QID: B1752

Which one of the following describes the overall reactivity effect of a decrease in moderator temperature in an undermoderated reactor?

A. Negative reactivity will be added partially because more neutron leakage will occur.

B. Negative reactivity will be added partially because more neutrons will be captured by the moderator.

C. Positive reactivity will be added partially because less neutron leakage will occur.

D. Positive reactivity will be added partially because fewer neutrons will be captured by the moderator.

ANSWER: C.

TOPIC: 292004
KNOWLEDGE: K1.02 [2.5/2.6]
QID: B2052

A reactor is shut down with the reactor vessel head removed for refueling. The core is covered by 23 feet of refueling water with a temperature of 100°F.

Which one of the following could increase <u>or</u> decrease K_{eff} depending on core burnup?

A. A spent fuel assembly is removed from the core.

B. Refueling water temperature is decreased to 95°F.

C. A fresh neutron source is installed in the core.

D. Movable incore source range instrumentation is repositioned to increase source range count rate.

ANSWER: B.

TOPIC: 292004
KNOWLEDGE: K1.02 [2.5/2.6]
QID: B2252

Under which one of the following conditions is a reactor most likely to have a positive moderator temperature coefficient?

A. Low coolant temperature at the beginning of a fuel cycle.

B. Low coolant temperature at the end of a fuel cycle.

C. High coolant temperature at the beginning of a fuel cycle.

D. High coolant temperature at the end of a fuel cycle.

ANSWER: B.

TOPIC: 292004
KNOWLEDGE: K1.02 [2.5/2.6]
QID: B2452 (P951)

During a reactor vessel cooldown, positive reactivity is added to the core if the moderator temperature coefficient is negative. This is partially due to...

A. a decreasing thermal utilization factor.

B. an increasing thermal utilization factor.

C. a decreasing resonance escape probability.

D. an increasing resonance escape probability.

ANSWER: D.

TOPIC: 292004
KNOWLEDGE: K1.02 [2.5/2.6]
QID: B2652 (P2650)

Which one of the following describes the overall reactivity effect of a moderator temperature decrease in an overmoderated reactor?

A. Positive reactivity will be added because fewer neutrons will be captured by the moderator while slowing down.

B. Positive reactivity will be added because fewer neutrons will be absorbed at resonance energies while slowing down.

C. Negative reactivity will be added because more neutrons will be captured by the moderator while slowing down.

D. Negative reactivity will be added because more neutrons will be absorbed at resonance energies while slowing down.

ANSWER: C.

TOPIC: 292004
KNOWLEDGE: K1.02 [2.5/2.6]
QID: B2853

Which one of the following describes the change in the moderator temperature coefficient (MTC) of reactivity over core life? (Assume 100 percent power for all cases.)

A. MTC becomes less negative because as control rods are withdrawn from the core, the increase in the number of neutrons leaking from the core for a 1°F increase in moderator temperature is smaller.

B. MTC becomes less negative because as U-238 depletes, a 1°F increase in moderator temperature results in fewer neutrons escaping resonance capture.

C. MTC becomes more negative because as U-235 depletes, a 1°F increase in moderator temperature permits more neutrons to leak out of the core.

D. MTC becomes more negative because as fission product poisons build up, the increase in the number of neutrons being absorbed by fission product poisons for a 1°F increase in moderator temperature is larger.

ANSWER: A.

TOPIC: 292004
KNOWLEDGE: K1.02 [2.5/2.6]
QID: B2952

Which one of the following describes the overall reactivity effect of a moderator temperature increase in an overmoderated reactor?

A. Negative reactivity will be added because more neutron leakage will occur.

B. Negative reactivity will be added because more neutrons will be captured by the moderator.

C. Positive reactivity will be added because less neutron leakage will occur.

D. Positive reactivity will be added because fewer neutrons will be captured by the moderator.

ANSWER: D.

TOPIC: 292004
KNOWLEDGE: K1.02 [2.5/2.6]
QID: B3152

How does control rod withdrawal affect the moderator temperature coefficient in an undermoderated reactor?

A. The initially negative MTC becomes more negative.

B. The initially negative MTC becomes less negative.

C. The initially positive MTC becomes more positive.

D. The initially positive MTC becomes less positive.

ANSWER: B.

TOPIC: 292004
KNOWLEDGE: K1.02 [2.5/2.6]
QID: B3652 (P3650)

Which one of the following describes the reactivity effect of a moderator temperature increase in an undermoderated reactor?

A. Negative reactivity will be added because more neutrons will be absorbed by U-238 at resonance energies while slowing down.

B. Negative reactivity will be added because more neutrons will be captured by the moderator while slowing down.

C. Positive reactivity will be added because fewer neutrons will be absorbed by U-238 at resonance energies while slowing down.

D. Positive reactivity will be added because fewer neutrons will be captured by the moderator while slowing down.

ANSWER: A.

TOPIC: 292004
KNOWLEDGE: K1.02 [2.5/2.6]
QID: B4226

A reactor is shut down with the reactor vessel head removed. The core is covered by 23 feet of refueling water at a temperature of 100°F.

Which one of the following will increase K_{eff} if the reactor is at the end of core life, but will decrease K_{eff} if the reactor is at the beginning of core life?

A. A fresh neutron source is installed in the core.

B. Refueling water temperature is increased to 105°F.

C. A spent fuel assembly is replaced with a new fuel assembly.

D. Movable incore source range instrumentation is repositioned to increase source range count rate.

ANSWER: B.

TOPIC: 292004
KNOWLEDGE: K1.02 [2.5/2.6]
QID: B6526

Consider a one month period of 100 percent power operation near the beginning of a fuel cycle.

During this period of operation, the depletion of U-235 in the fuel tends to make the moderator temperature coefficient _____ negative; and the withdrawal of control rods tends to make the moderator temperature coefficient _____ negative.

A. more; less

B. more; more

C. less; more

D. less; less

ANSWER: D.

TOPIC: 292004
KNOWLEDGE: K1.02 [2.5/2.6]
QID: B6926 (P6926)

Which one of the following 10 percent power level changes produces the largest amount of negative reactivity from the fuel temperature coefficient? (Assume that each power level change produces the same increase/decrease in fuel temperature.)

A. 30 percent to 40 percent

B. 30 percent to 20 percent

C. 80 percent to 90 percent

D. 80 percent to 70 percent

ANSWER: A.

TOPIC: 292004
KNOWLEDGE: K1.03 [2.6/2.7]
QID: B753 (P1950)

Factors that affect the probability of resonance absorption of a neutron by a nucleus include...

A. kinetic energy of the nucleus, kinetic energy of the neutron, and excitation energy of the nucleus.

B. kinetic energy of the neutron, excitation energy of the nucleus, and excitation energy of the neutron.

C. excitation energy of the nucleus, excitation energy of the neutron, and kinetic energy of the nucleus.

D. excitation energy of the neutron, kinetic energy of the nucleus, and kinetic energy of the neutron.

ANSWER: A.

TOPIC: 292004
KNOWLEDGE: K1.03 [2.6/2.7]
QID: B1052

As fuel temperature increases, the effective resonance absorption peaks exhibited by U-238 will _____ in height and will _____ in width.

A. decrease; increase

B. decrease; decrease

C. increase; increase

D. increase; decrease

ANSWER: A.

TOPIC: 292004
KNOWLEDGE: K1.03 [2.6/2.7]
QID: B3153 (P3150)

Which one of the following has the smallest microscopic cross section for absorption of a thermal neutron in an operating reactor?

A. Uranium-235

B. Uranium-238

C. Samarium-149

D. Xenon-135

ANSWER: B.

TOPIC: 292004
KNOWLEDGE: K1.04 [2.6/2.7]
QID: B652 (P1650)

Which one of the following contains the pair of nuclides that are the <u>most</u> significant contributors to the total resonance capture in the core near the end of a fuel cycle?

A. Pu-239 and U-235

B. Pu-239 and Pu-240

C. U-238 and Pu-240

D. U-238 and Pu-239

ANSWER: C.

TOPIC: 292004
KNOWLEDGE: K1.04 [2.6/2.7]
QID: B1553 (P1951)

A nuclear power plant is operating at steady-state 70 percent power. Which one of the following will result in a less negative fuel temperature coefficient? (Consider only the direct effect of the change in each listed parameter.)

A. Increase in Pu-240 inventory in the core.

B. Increase in moderator temperature.

C. Increase in fuel temperature.

D. Increase in void fraction.

ANSWER: C.

TOPIC: 292004
KNOWLEDGE: K1.04 [2.6/2.7]
QID: B1852

Which one of the following is a characteristic of Doppler broadening?

A. As reactor coolant temperature increases, less moderator molecules will be present in the core to thermalize neutrons.

B. As reactor fuel temperature increases, neutrons from a wider energy spectrum will be captured in the fuel.

C. As moderator void percentage increases, neutrons will travel farther in the core before being absorbed or scattered.

D. As control rods are withdrawn, additional reactor fuel will be exposed and result in a power increase.

ANSWER: B.

TOPIC: 292004
KNOWLEDGE: K1.04 [2.6/2.7]
QID: B1952 (P650)

Which one of the following isotopes is the <u>most</u> significant contributor to the resonance capture of fission neutrons in a reactor at the beginning of a fuel cycle?

A. U-238

B. U-233

C. Pu-240

D. Pu-239

ANSWER: A.

TOPIC: 292004
KNOWLEDGE: K1.04 [2.6/2.7]
QID: B3352 (P2050)

Which one of the following isotopes is the most significant contributor to the resonance capture of fission neutrons in a reactor at the end of a fuel cycle?

A. U-235

B. U-238

C. Pu-239

D. Pu-240

ANSWER: B.

TOPIC: 292004
KNOWLEDGE: K1.04 [2.6/2.7]
QID: B3753 (P3750)

Refer to the drawing of a curve showing the neutron absorption characteristics of a typical U-238 nucleus at a resonance neutron energy (see figure below). The associated reactor is currently operating at steady-state 80 percent power.

During a subsequent reactor power decrease to 70 percent, the curve will become _____; and the percentage of the core neutron population lost to resonance capture by U-238 will _____.

A. shorter and broader; increase

B. shorter and broader; decrease

C. taller and more narrow; increase

D. taller and more narrow; decrease

ANSWER: D.

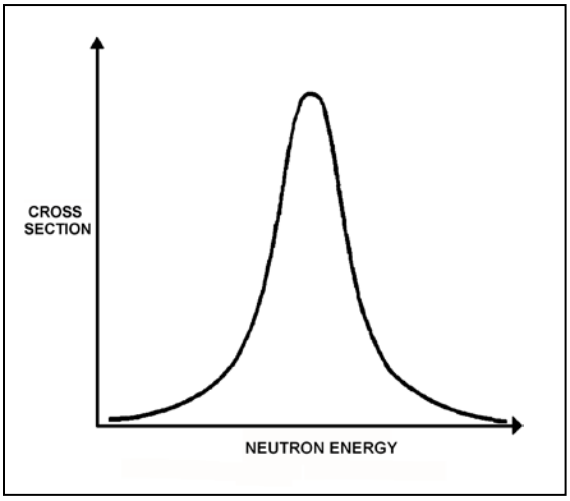

TOPIC: 292004
KNOWLEDGE: K1.04 [2.9/2.9]
QID: B3852 (P3850)

Refer to the curve of microscopic cross section for absorption versus neutron energy for a resonance peak in U-238 in a reactor operating at 80 percent power (see figure below).

If reactor power is decreased to 60 percent, the height of the curve will _____; and the area under the curve will _____.

A. increase; increase

B. increase; remain the same

C. decrease; decrease

D. decrease; remain the same

ANSWER: B.

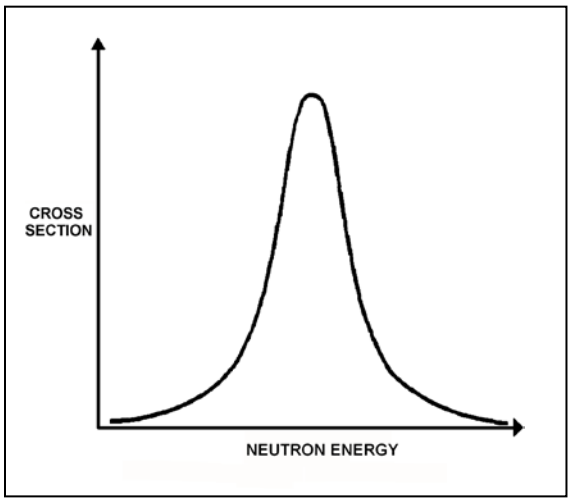

TOPIC: 292004
KNOWLEDGE: K1.04 [2.6/2.7]
QID: B4826 (P4826)

If the average temperature of a fuel pellet decreases by 50°F, the microscopic cross-section for absorption of neutrons at a resonance energy of U-238 will _____; and the microscopic cross-sections for absorption of neutrons at energies that are slightly higher or lower than a U-238 resonance energy will _____.

A. increase; increase

B. increase; decrease

C. decrease; increase

D. decrease; decrease

ANSWER: B.

TOPIC: 292004
KNOWLEDGE: K1.04 [2.6/2.7]
QID: B6627 (P6626)

If the average temperature of a fuel pellet increases by 50°F, the microscopic cross-section for absorption of neutrons at a resonance energy of U-238 will _____; and the microscopic cross-sections for absorption of neutrons at energies that are slightly higher or lower than a U-238 resonance energy will _____.

A. increase; increase

B. increase; decrease

C. decrease; increase

D. decrease; decrease

ANSWER: C.

TOPIC: 292004
KNOWLEDGE: K1.05 [2.9/2.9]
QID: B452 (P2251)

Which one of the following pairs of isotopes is responsible for the negative reactivity associated with a fuel temperature increase near the end of core life?

A. U-235 and Pu-239

B. U-235 and Pu-240

C. U-238 and Pu-239

D. U-238 and Pu-240

ANSWER: D.

TOPIC: 292004
KNOWLEDGE: K1.05 [2.9/2.9]
QID: B552

Which one of the following describes how the magnitude of the fuel temperature coefficient of reactivity is affected over core life?

A. It becomes more negative, due to the buildup of Pu-240.

B. It becomes less negative, due to the buildup of fission products.

C. It becomes more negative initially due to gadolinium burnup, then less negative due to fuel depletion.

D. It remains essentially constant.

ANSWER: A.

TOPIC 292004
KNOWLEDGE: K1.05 [2.9/2.9]
QID: B1353

Compared to beginning of core life, the fuel temperature coefficient is _____ negative at end of core life due to _____. (Assume the same initial fuel temperature throughout the fuel cycle.)

A. less; depletion of U-238

B. more; burnup of gadolinium

C. less; buildup of fission products

D. more; buildup of Pu-240

ANSWER: D.

TOPIC: 292004
KNOWLEDGE: K1.05 [2.9/2.9]
QID: B2053

Compared to operating at a low power level, the fuel temperature coefficient of reactivity at a high power level is _____ negative due to _____. (Assume the same core age.)

A. less; buildup of fission product poisons

B. more; improved pellet-to-clad heat transfer

C. less; higher fuel temperature

D. more; increased neutron flux

ANSWER: C.

TOPIC: 292004
KNOWLEDGE: K1.05 [2.9/2.9]
QID: B2152 (P2151)

Which one of the following contains the nuclides responsible for most of the resonance capture of fission neutrons in a reactor at the beginning of the sixth fuel cycle? (Assume that each refueling process replaces one-third of the fuel.)

A. U-235 and Pu-239

B. U-235 and U-238

C. U-238 and Pu-239

D. U-238 and Pu-240

ANSWER: D.

TOPIC: 292004
KNOWLEDGE: K1.05 [2.9/2.9]
QID: B2453 (P2352)

Refer to the curve of microscopic cross section for absorption versus neutron energy for a resonance peak in U-238 (see figure below).

If fuel temperature increases, the area under the curve will _____; and negative reactivity will be added to the core because _____.

A. increase; neutrons of a wider range of energies will be absorbed by U-238

B. increase; more neutrons will be absorbed by U-238 at the resonance neutron energy

C. remain the same; neutrons of a wider range of energies will be absorbed by U-238

D. remain the same; more neutrons will be absorbed by U-238 at the resonance neutron energy

ANSWER: C.

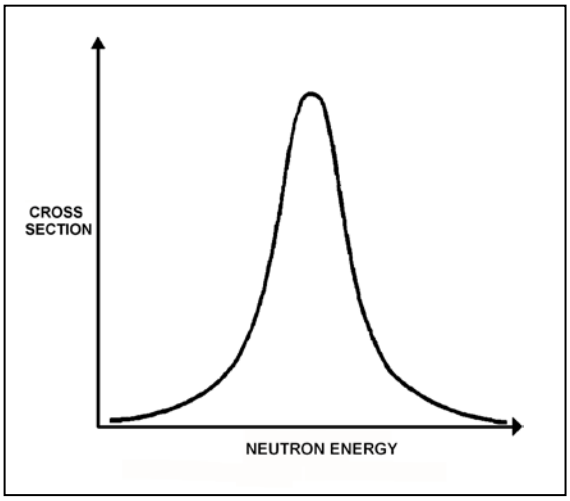

TOPIC: 292004
KNOWLEDGE: K1.05 [2.9/2.9]
QID: B2553 (P2651)

In a comparison of the fuel temperature coefficient at the beginning and end of a fuel cycle, the fuel temperature coefficient is more negative at the _____ of a fuel cycle because _____. (Assume the same initial fuel temperature throughout the fuel cycle.)

A. end; more Pu-240 is in the core

B. end; more fission products are in the core

C. beginning; more U-238 is in the core

D. beginning; less fission products are in the core

ANSWER: A.

TOPIC: 292004
KNOWLEDGE: K1.05 [2.9/2.9]
QID: B2753 (P2751)

Refer to the curve of microscopic cross section for absorption versus neutron energy for a 6.7 electron volt (eV) resonance peak in U-238 for a reactor operating at 50 percent power (see figure below).

If fuel temperature decreases by 50°F, the area under the curve will _____; and positive reactivity will be added to the core because _____.

A. decrease; fewer neutrons will be absorbed by U-238 overall

B. decrease; fewer 6.7 eV neutrons will be absorbed by U-238 at the resonance energy

C. remain the same; fewer neutrons will be absorbed by U-238 overall

D. remain the same; fewer 6.7 eV neutrons will be absorbed by U-238 at the resonance energy

ANSWER: C.

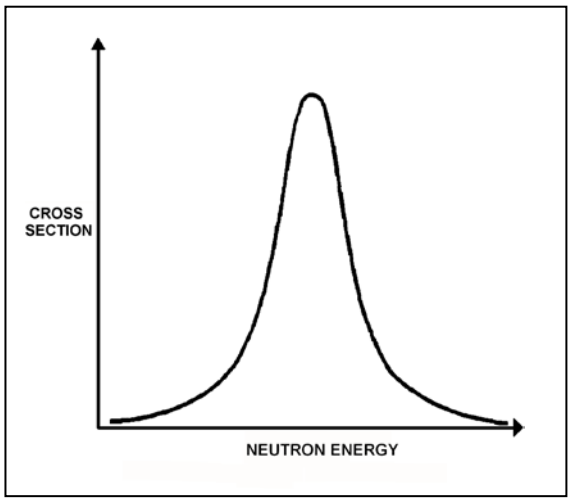

TOPIC: 292004
KNOWLEDGE: K1.05 [2.9/2.9]
QID: B2852 (P2850)

Refer to the curve of microscopic cross section for absorption versus neutron energy for a resonance peak in U-238 in a reactor operating at 80 percent power (see figure below).

If reactor power is increased to 100 percent, the height of the curve will _____; and the area under the curve will _____.

A. increase; increase

B. increase; remain the same

C. decrease; decrease

D. decrease; remain the same

ANSWER: D.

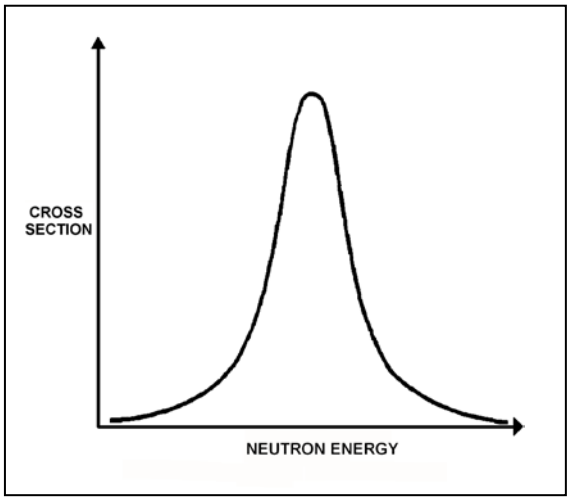

TOPIC: 292004
KNOWLEDGE: K1.10 [3.2/3.2]
QID: B125

Which one of the following will cause the void coefficient to become less negative? (Consider only the direct effects of the indicated changes.)

A. Core void fraction increases.

B. Fuel temperature decreases.

C. Gadolinium burns out.

D. Control rods are partially inserted.

ANSWER: B.

TOPIC: 292004
KNOWLEDGE: K1.10 [3.2/3.2]
QID: B354

Which one of the following is the primary reason the void coefficient becomes less negative toward the end of a fuel cycle?

A. The thermal neutron flux increases.

B. The thermal diffusion length decreases.

C. The fuel centerline temperature increases.

D. The control rod density decreases.

ANSWER: D.

TOPIC: 292004
KNOWLEDGE: K1.10 [3.2/3.2]
QID: B2153

Which one of the following describes why more power is produced in the lower half of a reactor core (versus the upper half) that has been operating at 100 percent power for several weeks near the beginning of a fuel cycle?

A. Xenon concentration is smaller in the lower half of the core.

B. The moderator-to-fuel ratio is smaller in the lower half of the core.

C. Control rods are adding less negative reactivity in the lower half of the core.

D. The void coefficient is adding less negative reactivity in the lower half of the core.

ANSWER: D.

TOPIC: 292004
KNOWLEDGE: K1.11 [2.5/2.6]
QID: B953

Which one of the following describes how and why the void coefficient of reactivity changes as void fraction increases during a control rod withdrawal at 80 percent power?

A. Becomes less negative, due to the increased absorption of neutrons by U-238.

B. Becomes less negative, due to a greater fraction of neutrons lost to leakage from the core.

C. Becomes more negative, due to the reduction in the fast fission contribution to the neutron population.

D. Becomes more negative, due to a greater fractional loss of moderator for a 1 percent void increase at higher void fractions.

ANSWER: D.

TOPIC: 292004
KNOWLEDGE: K1.14 [3.3/3.3]
QID: B253

During a reactor startup with the reactor coolant at 520°F, excessive control rod withdrawal results in a 10-second reactor period with reactor power low in the intermediate range. Without any further operator action, which one of the following coefficients of reactivity will respond first to reduce the rate of power increase?

A. Pressure

B. Void

C. Moderator

D. Doppler

ANSWER: D.

TOPIC: 292004
KNOWLEDGE: K1.14 [3.3/3.3]
QID: B272

During a reactor power increase from steady-state 20 percent to steady-state 100 percent, the smallest addition of positive reactivity will be caused by the change in…

A. void content.

B. fuel temperature.

C. xenon concentration.

D. moderator temperature.

ANSWER: D.

TOPIC: 292004
KNOWLEDGE: K1.14 [3.3/3.3]
QID: B1653

Which one of the following lists the moderator temperature coefficient (MTC), fuel temperature coefficient (FTC), and void coefficient (VC) in order of magnitude from most negative to least negative for a reactor at 50 percent power in the middle of a fuel cycle?

A. FTC, VC, MTC

B. FTC, MTC, VC

C. VC, FTC, MTC

D. VC, MTC, FTC

ANSWER: D.

TOPIC: 292004
KNOWLEDGE: K1.14 [3.3/3.3]
QID: B2353

During a reactor power decrease from steady-state 100 percent to steady-state 20 percent, the <u>smallest</u> addition of positive reactivity will be caused by the change in...

A. void percentage.

B. fuel temperature.

C. xenon concentration.

D. moderator temperature.

ANSWER: D.

TOPIC: 292005
KNOWLEDGE: K1.01 [3.2/3.3]
QID: B653

A notch movement of a control rod represents a rod travel of _____ inches.

A. 2

B. 3

C. 6

D. 12

ANSWER: C.

TOPIC: 292005
KNOWLEDGE: K1.01 [3.2/3.3]
QID: B854

Rod position indications indicate that a control rod is at position 16. When the control rod is moved to position 22, it is being...

A. inserted 18 inches.

B. withdrawn 18 inches.

C. inserted 36 inches.

D. withdrawn 36 inches.

ANSWER: B.

TOPIC: 292005
KNOWLEDGE: K1.01 [3.2/3.3]
QID: B1255

A reactor core consists of fuel bundles and control rods that are 12 feet in length. A new rod position is indicated for every 3 inches of rod motion.

If a control rod is inserted 75 percent into the core, it will be located at rod position...

A. 9.

B. 12.

C. 27.

D. 36.

ANSWER: B.

TOPIC: 292005
KNOWLEDGE: K1.01 [3.2/3.3]
QID: B3054

If a control rod is moved from position 22 to position 12, it is being...

A. inserted 30 inches.

B. withdrawn 30 inches.

C. inserted 60 inches.

D. withdrawn 60 inches.

ANSWER: A.

TOPIC: 292005
KNOWLEDGE: K1.01 [3.2/3.3]
K1.11 [2.4/2.5]
QID: B3554

A control rod that was initially at position 06 is being withdrawn three more notches. After the withdrawal, the control rod will be classified as a _____ rod; and the blade tip for this control rod will be positioned 36 inches from the _____ position.

A. shallow; fully inserted

B. shallow; fully withdrawn

C. deep; fully inserted

D. deep; fully withdrawn

ANSWER: C.

TOPIC: 292005
KNOWLEDGE: K1.02 [2.5/2.6]
QID: B754

Which one of the following materials is used in control rods primarily for thermal neutron absorption?

A. Boron

B. Carbon

C. Gadolinium

D. Stainless Steel

ANSWER: A.

TOPIC: 292005
KNOWLEDGE: K1.04 [3.5/3.5]
QID: B54

The reverse power effect (or reverse reactivity effect) occasionally observed when a shallow control rod is withdrawn one or two notches is due to a relatively...

A. small local power decrease due to increased local Doppler effects.

B. small local power decrease due to the shadowing effect of nearby control rods.

C. large local power increase being offset by a void-related power decrease.

D. large local power increase being offset by a moderator temperature-related power decrease.

ANSWER: C.

TOPIC: 292005
KNOWLEDGE: K1.04 [3.5/3.5]
K1.12 [2.6/2.9]
QID: B134

Withdrawal of a deep control rod will <u>significantly</u> affect which one of the following?

A. Axial flux shape

B. Rod shadowing

C. Radial power distribution

D. Reverse power effect

ANSWER: C.

TOPIC: 292005
KNOWLEDGE: K1.04 [3.5/3.5]
QID: B254

A reactor is operating at steady-state 50 percent power. A control rod is inserted a short distance (from 08 to 02 notches). Assuming that recirculation flow remains constant, reactor power will...

A. increase and stabilize at a higher value.

B. increase temporarily, then return to the original value.

C. decrease and stabilize at a lower value.

D. decrease temporarily, then return to the original value.

ANSWER: C.

TOPIC: 292005
KNOWLEDGE: K1.04 [3.5/3.5]
QID: B356

A reactor is initially critical below the point of adding heat with stable reactor vessel temperature and pressure. If control rods are manually inserted for 5 seconds, reactor power will decrease...

A. to a shutdown power level determined by subcritical multiplication.

B. temporarily, then return to the original power level due to the resulting decrease in moderator temperature.

C. until inherent positive reactivity feedback causes the reactor to become critical at a lower power level.

D. temporarily, then return to the original power level due to subcritical multiplication.

ANSWER: A.

TOPIC: 292005
KNOWLEDGE: K1.04 [3.5/3.5]
QID: B755 (P754)

A reactor is initially critical below the point of adding heat (POAH) during a reactor startup. If control rods are manually withdrawn for 5 seconds, reactor power will...

A. increase to a stable critical power level below the POAH.

B. increase temporarily, then decrease and stabilize at the original value.

C. increase to a stable critical power level at the POAH.

D. increase temporarily, then decrease and stabilize below the original value.

ANSWER: C.

TOPIC: 292005
KNOWLEDGE: K1.04 [3.5/3.5]
QID: B954 (P1955)

A reactor has been shut down for three weeks with all control rods fully inserted. If a center control rod is fully withdrawn from the core, neutron flux level will… (Assume the reactor remains subcritical.)

A. remain the same.

B. increase and stabilize at a new higher level.

C. increase temporarily then return to the original level.

D. increase exponentially until the operator reinserts the center control rod.

ANSWER: B.

TOPIC: 292005
KNOWLEDGE: K1.04 [3.5/3.5]
QID: B1954

Reactor power is stable at the point of adding heat during a reactor startup; and reactor vessel pressure is stable at 600 psig. Then, control rods are manually withdrawn for 5 seconds.

When conditions stabilize, reactor power will be _____; and reactor vessel pressure will be _____. (Assume the reactor does not scram.)

A. higher; the same

B. higher; higher

C. the same; the same

D. the same; higher

ANSWER: B.

TOPIC: 292005
KNOWLEDGE: K1.04 [3.5/3.5]
QID: B2155 (P1854)

A reactor has been shut down for three weeks with all control rods fully inserted. If a single control rod is fully withdrawn from the core, neutron flux level will… (Assume the reactor remains subcritical.)

A. increase and stabilize above the original level.

B. increase, then decrease and stabilize at the original level.

C. increase, then decrease and stabilize above the original level.

D. remain the same during and after the withdrawal.

ANSWER: A.

TOPIC: 292005
KNOWLEDGE: K1.04 [3.5/3.5]
QID: B2254

A reactor is critical below the point of adding heat (POAH) during a hot reactor startup in the middle of a fuel cycle. Control rods are withdrawn for 20 seconds to establish a positive 30-second reactor period.

In response to the control rod withdrawal, reactor power will increase...

A. continuously until control rods are reinserted.

B. and stabilize at a level slightly below the POAH.

C. temporarily, and then stabilize at the original level.

D. and stabilize at a level equal to or above the POAH.

ANSWER: D.

TOPIC: 292005
KNOWLEDGE: K1.04 [3.5/3.5]
QID: B2554

A reactor is operating steady-state at the point of adding heat (POAH) during a reactor startup near the beginning of a fuel cycle. Reactor pressure is stable at 600 psig and the main steam isolation valves are closed. There is a small but significant heat loss from the reactor vessel to the surroundings.

If a control rod is manually inserted for 5 seconds and the reactor does <u>not</u> scram, when conditions stabilize reactor power will be _____; and reactor vessel pressure will be _____.

A. at the POAH; 600 psig

B. at the POAH; less than 600 psig

C. less than the POAH; 600 psig

D. less than the POAH; less than 600 psig

ANSWER: B.

TOPIC: 292005
KNOWLEDGE: K1.04 [3.5/3.5]
QID: B3856

Criticality has been achieved during a xenon-free reactor startup with core neutron flux level low in the intermediate range. A stable positive 60-second reactor period has been established. Now the operator begins inserting control rods in an effort to stabilize the core neutron flux level near its current value. The operator stops inserting control rods exactly when the reactor period indicates infinity.

Immediately after the operator stops inserting the control rods, the reactor period will become _____; and the core neutron flux level will _____.

A. positive; increase exponentially

B. positive; increase linearly

C. negative; decrease exponentially

D. negative; decrease linearly

ANSWER: A.

TOPIC: 292005
KNOWLEDGE: K1.05 [2.5/2.6]
QID: B555

Rod density is a measure of the total number of control rod notches _____ the core divided by the total number of control rod notches _____ the core.

A. inserted into; available in

B. inserted into; withdrawn from

C. withdrawn from; available in

D. withdrawn from; inserted into

ANSWER: A.

TOPIC: 292005
KNOWLEDGE: K1.05 [2.5/2.6]
QID: B955

How is control rod density affected as control rods are inserted during a reactor shutdown?

A. Increases continuously during rod insertion.

B. Decreases continuously during rod insertion.

C. Increases initially, then decreases after 50 percent of the rods are inserted.

D. Decreases initially, then increases after 50 percent of the rods are inserted.

ANSWER: A.

TOPIC: 292005
KNOWLEDGE: K1.05 [2.5/2.6]
QID: B1055

Control rod density is a measure of the...

A. percentage of control rods inserted into the core.

B. percentage of control rods withdrawn from the core.

C. number of control rods fully inserted divided by the number of control rods fully withdrawn.

D. number of control rods fully withdrawn divided by the number of control rods fully inserted.

ANSWER: A.

TOPIC: 292005
KNOWLEDGE: K1.05 [2.5/2.6]
QID: B1355

During a reactor startup, as control rods are being withdrawn, control rod density...

A. decreases until 50 percent of the rods are withdrawn, then increases.

B. increases until 50 percent of the rods are withdrawn, then decreases.

C. decreases whenever any of the rods are withdrawn.

D. increases whenever any of the rods are withdrawn.

ANSWER: C.

TOPIC: 292005
KNOWLEDGE: K1.07 [2.5/2.6]
QID: B756 (P755)

A control rod is positioned in a reactor with the following neutron flux parameters:

Core average thermal neutron flux = 1×10^{12} neutrons/cm^2-sec
Control rod tip thermal neutron flux = 5×10^{12} neutrons/cm^2-sec

If the control rod is slightly withdrawn such that the tip of the control rod is located in a thermal neutron flux of 1×10^{13} neutrons/cm^2-sec, the differential control rod worth will increase by a factor of _____. (Assume the core average thermal neutron flux is constant.)

A. 0.5

B. 1.4

C. 2.0

D. 4.0

ANSWER: D.

TOPIC: 292005
KNOWLEDGE: K1.07 [2.4/2.6]
QID: B856 (P555)

The total amount of reactivity added by a control rod position change from a reference height to any other rod height is called...

A. differential rod worth.

B. excess reactivity.

C. integral rod worth.

D. reference reactivity.

ANSWER: C.

TOPIC: 292005
KNOWLEDGE: K1.07 [2.4/2.6]
QID: B1057 (P1554)

A control rod is positioned in a reactor with the following neutron flux parameters:

Core average thermal neutron flux = 1.0×10^{12} n/cm^2-sec
Control rod tip thermal neutron flux = 5.0×10^{12} n/cm^2-sec

If the control rod is slightly inserted such that the control rod tip is located in a thermal neutron flux of 1.0×10^{13} n/cm^2-sec, the differential control rod worth will increase by a factor of _____. (Assume the core average thermal neutron flux is constant.)

A. 2

B. 4

C. 10

D. 100

ANSWER: B.

TOPIC: 292005
KNOWLEDGE: K1.07 [2.4/2.6]
QID: B1555

As a control rod is withdrawn from notch position 00 to notch position 48, the absolute value of integral rod worth will...

A. decrease, then increase.

B. increase, then decrease.

C. decrease continuously.

D. increase continuously.

ANSWER: D.

TOPIC: 292005
KNOWLEDGE: K1.07 [2.4/2.6]
QID: B1657 (P1555)

Which one of the following expresses the relationship between differential rod worth (DRW) and integral rod worth (IRW)?

A. IRW is the slope of the DRW curve.

B. IRW is the inverse of the DRW curve.

C. IRW is the sum of the DRWs between the initial and final control rod positions.

D. IRW is the sum of the DRWs of all control rods at a specific control rod position.

ANSWER: C.

TOPIC: 292005
KNOWLEDGE: K1.07 [2.4/2.6]
QID: B1755 (P134)

Which one of the following expresses the relationship between differential rod worth (DRW) and integral rod worth (IRW)?

A. DRW is the area under the IRW curve at a given rod position.

B. DRW is the slope of the IRW curve at a given rod position.

C. DRW is the IRW at a given rod position.

D. DRW is the square root of the IRW at a given rod position.

ANSWER: B.

TOPIC: 292005
KNOWLEDGE: K1.07 [2.4/2.6]
QID: B1855 (P1755)

A control rod is positioned in a reactor with the following neutron flux parameters:

Core average thermal neutron flux = 1.0×10^{12} n/cm^2-sec
Control rod tip thermal neutron flux = 4.0×10^{12} n/cm^2-sec

If the control rod is slightly inserted such that the control rod tip is located in a thermal neutron flux of 1.2×10^{13} n/cm^2-sec, the differential control rod worth will increase by a factor of _____. (Assume the core average thermal neutron flux is constant.)

A. 1/3

B. 3

C. 9

D. 27

ANSWER: C.

TOPIC: 292005
KNOWLEDGE: K1.07 [2.4/2.6]
QID: B1955

Which one of the following describes the change in magnitude (absolute value) of integral rod worth during the complete withdrawal of a fully inserted control rod?

A. Increases, then decreases.

B. Decreases, then increases.

C. Increases continuously.

D. Decreases continuously.

ANSWER: C.

TOPIC: 292005
KNOWLEDGE: K1.07 [2.4/2.6]
QID: B2055

Which one of the following describes the change in magnitude (absolute value) of differential control rod worth during the complete withdrawal of a fully inserted control rod?

A. Increases, then decreases.

B. Decreases, then increases.

C. Increases continuously.

D. Decreases continuously.

ANSWER: A.

TOPIC: 292005
KNOWLEDGE: K1.07 [2.4/2.6]
QID: B2255 (P655)

Which one of the following parameters typically has the greatest influence on the shape of a differential rod worth curve?

A. Core radial neutron flux distribution

B. Core axial neutron flux distribution

C. Core xenon distribution

D. Burnable poison distribution

ANSWER: B.

TOPIC: 292005
KNOWLEDGE: K1.07 [2.4/2.6]
QID: B2655 (P2554)

A control rod is positioned in a reactor with the following neutron flux parameters:

Core average thermal neutron flux = 1.0×10^{12} n/cm^2-sec
Control rod tip thermal neutron flux = 4.0×10^{12} n/cm^2-sec

If the control rod is slightly inserted such that the control rod tip is located in a thermal neutron flux of 1.6×10^{13} n/cm^2-sec, the differential control rod worth will increase by a factor of _____. (Assume the core average thermal neutron flux is constant.)

A. 2

B. 4

C. 8

D. 16

ANSWER: D.

TOPIC: 292005
KNOWLEDGE: K1.07 [2.4/2.6]
QID: B2755 (P1354)

Integral rod worth is the...

A. change in reactivity per unit change in rod position.

B. rod worth associated with the most reactive control rod.

C. change in worth of a control rod per unit change in reactor power.

D. reactivity added by moving a control rod from a reference point to another point.

ANSWER: D.

TOPIC: 292005
KNOWLEDGE: K1.07 [2.4/2.6]
QID: B2856

During normal full power operation, the differential control rod worth is small near the top and bottom of the core compared to the center regions due to the effects of...

A. fuel enrichment.

B. neutron flux distribution.

C. xenon concentration.

D. fuel temperature distribution.

ANSWER: B.

TOPIC: 292005
KNOWLEDGE: K1.07 [2.4/2.6]
QID: B2956

A reactor is operating at steady-state 50 percent power near the end of a fuel cycle with all control systems in manual. The radial power distribution is symmetric and peaked in the center of the core, and the axial power distribution is peaked slightly below the core midplane.

The tip of the most centrally-located control rod is currently located at the core midplane. The control rod is constructed of a homogeneous neutron absorber and the active neutron absorber length is exactly as long as the adjacent fuel assembly. The rod is manually inserted fully into the core, and reactor power stabilizes at 42 percent.

If, instead, the control rod had been withdrawn fully from its core midplane position, the reactor would have experienced**...**

A. a larger absolute change in integral control rod reactivity.

B. a smaller absolute change in integral control rod reactivity.

C. a larger absolute change in reactor shutdown margin.

D. a smaller absolute change in reactor shutdown margin.

ANSWER: A.

TOPIC: 292005
KNOWLEDGE: K1.09 [2.5/2.6]
QID: B53

Which one of the following statements describes how changes in core parameters affect control rod worth (CRW)?

A. CRW increases with an increase in void fraction.

B. CRW increases with an increase in fast neutron flux.

C. CRW decreases when approaching the end of a fuel cycle.

D. CRW decreases when the temperature of the fuel decreases.

ANSWER: C.

TOPIC: 292005
KNOWLEDGE: K1.09 [2.5/2.6]
QID: B357

If the void fraction surrounding several centrally located fuel bundles increases, the worth of the associated control rods will...

A. decrease, because the average neutron energy in the fuel bundles decreases, resulting in fewer neutrons traveling from within the fuel bundles to the affected control rods.

B. decrease, because more neutrons are resonantly absorbed in the fuel while they are being thermalized, resulting in fewer thermal neutrons available to be absorbed by the affected control rods.

C. increase, because the diffusion length of the thermal neutrons increases, resulting in more thermal neutrons traveling from within the fuel bundles to the affected control rods.

D. increase, because neutrons will experience a longer slowing down length, resulting in a smaller fraction of thermal neutrons being absorbed by the fuel and more thermal neutrons available to be absorbed by the affected control rods.

ANSWER: B.

TOPIC: 292005
KNOWLEDGE: K1.09 [2.5/2.6]
QID: B1157

Which one of the following conditions will cause the associated differential control rod worth(s) to become more negative? (Consider only the direct effect of the indicated changes.)

A. During a small power change, fuel temperature increases.

B. With the reactor shut down, reactor coolant temperature increases from 100°F to 200°F.

C. During a small power change, the percentage of voids increases.

D. During a control pattern adjustment, the local thermal neutron flux surrounding a control rod decreases while the core average thermal neutron flux remains the same.

ANSWER: B.

TOPIC: 292005
KNOWLEDGE: K1.09 [2.5/2.6]
QID: B1556

If the void fraction surrounding several centrally located fuel bundles decreases, the worth of the associated control rods will...

A. increase, because the average neutron energy in the area of the affected control rods increases.

B. increase, because fewer neutrons are resonantly absorbed in the fuel while they are being thermalized, resulting in more thermal neutrons available to be absorbed by the affected control rods.

C. decrease, because the diffusion length of the thermal neutrons decreases, resulting in fewer thermal neutrons reaching the affected control rods.

D. decrease, because neutrons will experience a shorter slowing down length, resulting in a larger fraction of thermal neutrons being absorbed by the fuel and fewer thermal neutrons available to be absorbed by the affected control rods.

ANSWER: B.

TOPIC: 292005
KNOWLEDGE: K1.09 [2.5/2.6]
QID: B2656 (P1556)

As moderator temperature increases, the differential rod worth becomes...

A. more negative due to longer neutron diffusion lengths.

B. less negative due to reduced moderation of neutrons.

C. more negative due to decreased resonance absorption of neutrons.

D. less negative due to decreased moderator absorption of neutrons.

ANSWER: A.

TOPIC: 292005
KNOWLEDGE: K1.09 [2.5/2.6]
QID: B2857

A reactor is operating at 85 percent power with control rod X-Y inserted 20 percent. Which one of the following will cause the differential rod worth of control rod X-Y to become more negative? (Assume that control rod X-Y remains 20 percent inserted for each case.)

A. Core Xe-135 builds up in the lower half of the core.

B. An adjacent control rod is fully withdrawn from the core.

C. Reactor vessel pressure drifts from 900 psig to 880 psig.

D. Fuel temperature increases as fission product gases accumulate in nearby fuel rods.

ANSWER: B.

TOPIC: 292005
KNOWLEDGE: K1.10
QID: B179

Which one of the following is a reason for neutron flux shaping?

A. To minimize the worth of individual control rods by evenly distributing the flux radially.

B. To reduce the reverse power effect during rod withdrawal by peaking the flux at the top of the core.

C. To equalize control rod drive mechanism wear and control rod burnup.

D. To increase the effectiveness of the power control rods by peaking the flux at the bottom of the core.

ANSWER: A.

TOPIC: 292005
KNOWLEDGE: K1.10 [2.8/3.3]
QID: B255

Neutron flux shaping within a reactor core is designed to...

A. prevent the effects of rod shadowing during control rod motion.

B. generate more power in the top portion of the core early in core life.

C. ensure that local core thermal power limits are not exceeded.

D. minimize the reverse power effect during control rod motion.

ANSWER: C.

TOPIC: 292005
KNOWLEDGE: K1.10 [2.8/3.3]
QID: B1557

Which one of the following is a reason for neutron flux shaping?

A. To minimize local power peaking by more evenly distributing the core thermal neutron flux.

B. To reduce the reverse power effect during rod withdrawal by peaking the thermal neutron flux at the top of the core.

C. To equalize control rod drive mechanism wear and control rod burnup.

D. To increase control rod worth by peaking the thermal neutron flux at the bottom of the core.

ANSWER: A.

TOPIC: 292005
KNOWLEDGE: K1.10 [2.8/3.3]
QID: B1656

The primary purpose for performing control rod program changes is to...

A. evenly burn up the fuel.

B. evenly burn up the control rods.

C. reduce excessive localized reactor vessel neutron irradiation.

D. reduce control rod shadowing.

ANSWER: A.

TOPIC: 292005
KNOWLEDGE: K1.10 [2.8/3.3]
QID: B2457 (P2456)

Which one of the following is a reason for neutron flux shaping in a reactor core?

A. To minimize local power peaking by more evenly distributing the core thermal neutron flux.

B. To reduce thermal neutron leakage by decreasing the neutron flux at the periphery of the reactor core.

C. To reduce the size and number of control rods needed to shutdown the reactor during a reactor scram.

D. To increase differential control rod worth by peaking the thermal neutron flux at the top of the reactor core.

ANSWER: A.

TOPIC: 292005
KNOWLEDGE: K1.10 [2.8/3.3]
QID: B3356 (P857)

The main reason for designing and operating a reactor with a flattened neutron flux distribution is to...

A. provide even burnup of control rods.

B. reduce neutron leakage from the core.

C. achieve a higher average power density.

D. provide more accurate nuclear power indication.

ANSWER: C.

TOPIC: 292005
KNOWLEDGE: K1.11 [2.4/2.5]
QID: B557

A control rod located at notch position _____ in the core would be considered a _____ control rod.

A. 36; deep

B. 36; intermediate

C. 12; intermediate

D. 12; deep

ANSWER: D.

TOPIC: 292005
KNOWLEDGE: K1.12 [2.6/2.9]
QID: B358 (P356)

A reactor is operating at steady-state 100 percent power when a single control rod fully inserts (from the fully withdrawn position). The operator then returns the reactor to 100 percent power with the control rod still fully inserted.

Compared to the initial axial neutron flux shape, the current axial neutron flux shape will have a...

A. minor distortion, because a fully inserted control rod has zero reactivity worth.

B. minor distortion, because the fully inserted control rod is an axially uniform poison.

C. major distortion, because the upper and lower core halves are loosely coupled.

D. major distortion, because power production along the length of the rod drastically decreases.

ANSWER: B.

TOPIC: 292005
KNOWLEDGE: K1.12 [2.6/2.9]
QID: B454

Which one of the following control rods, when repositioned by 2 notches, will have the greatest effect on the axial neutron flux shape?

A. Deep rod at the center of the core

B. Deep rod at the periphery of the core

C. Shallow rod at the center of the core

D Shallow rod at the periphery of the core

ANSWER: C.

TOPIC: 292005
KNOWLEDGE: K1.12 [2.6/2.9]
QID: B656

During reactor power operations, the axial neutron flux shape is affected most by withdrawal of _____ control rods; and the radial neutron flux shape is affected most by withdrawal of _____ control rods.

A. shallow; shallow

B. deep; shallow

C. shallow; deep

D. deep; deep

ANSWER: C

TOPIC: 292005
KNOWLEDGE: K1.12 [2.6/2.9]
QID: B1357

During reactor power operations, the radial neutron flux shape is affected most by the withdrawal of _____ control rods.

A. shallow

B. deep

C. peripheral

D. intermediate

ANSWER: B.

TOPIC: 292005
KNOWLEDGE: K1.12 [2.6/2.9]
QID: B1457

A reactor is operating at 60 percent power with thermal neutron flux peaked in the bottom half of the core. Partial withdrawal of a deep control rod will primarily affect total (versus local) core power because _____ is relatively high in the area of withdrawal.

A. fuel enrichment

B. thermal neutron flux

C. void content

D. moderator temperature

ANSWER: C.

TOPIC: 292005
KNOWLEDGE: K1.12 [2.6/2.9]
QID: B1757

Which one of the following control rods, when repositioned by 2 notches, will have the <u>smallest</u> effect on the axial neutron flux shape?

A. Deep rods at the center of the core

B. Deep rods at the periphery of the core

C. Shallow rods at the center of the core

D. Shallow rods at the periphery of the core

ANSWER: B.

TOPIC: 292005
KNOWLEDGE: K1.12 [2.6/2.9]
QID: B1856

A reactor is operating at 50 percent power at the beginning of a fuel cycle. Which one of the following compares the effects of dropping a deep control rod out of the core to the effects of dropping the same control rod if it is shallow? (Assume the reactor does not scram.)

A. Dropping a deep control rod causes a greater change in shutdown margin.

B. Dropping a deep control rod causes a smaller change in shutdown margin.

C. Dropping a deep control rod causes a greater change in axial power distribution.

D. Dropping a deep control rod causes a greater change in radial power distribution.

ANSWER: D.

TOPIC: 292006
KNOWLEDGE: K1.01 [2.7/2.8]
QID: B558

Fission fragments or daughters that have a substantial neutron absorption cross section and are not fissionable are called...

A. fissile materials.

B. fission product poisons.

C. fissionable nuclides.

D. burnable poisons.

ANSWER: B.

TOPIC: 292006
KNOWLEDGE: K1.01 [2.7/2.8]
QID: B1558 (P2858)

A fission product poison can be differentiated from all other fission products because a fission product poison...

A. has a higher microscopic cross section for thermal neutron capture.

B. has a longer half-life.

C. is produced in a greater percentage of thermal fissions.

D. is formed as a gas and is contained in the fuel pellets.

ANSWER: A.

TOPIC: 292006
KNOWLEDGE: K1.01 [2.7/2.8]
QID: B1858 (P858)

Fission product poisons can be differentiated from other fission products in that fission product poisons...

A. have a longer half-life.

B. are stronger absorbers of thermal neutrons.

C. are produced in a larger percentage of fissions.

D. have a higher fission cross section for thermal neutrons.

ANSWER: B.

TOPIC: 292006
KNOWLEDGE: K1.01 [2.7/2.8]
QID: B2061 (P2058)

A fission product poison can be differentiated from all other fission products in that a fission product poison will...

A. be produced in direct proportion to the fission rate in the core.

B. remain radioactive for thousands of years after the final reactor criticality.

C. depress the power production in some core locations and cause peaking in others.

D. migrate out of the fuel pellets and into the reactor coolant via pinhole defects in the clad.

ANSWER: C.

TOPIC: 292006
KNOWLEDGE: K1.02 [3.1/3.1]
QID: B55

Which one of the following lists the proper order of substances from the largest to the smallest microscopic cross section for absorption of thermal neutrons?

A. B-10, U-235, Xe-135

B. B-10, Xe-135, U-235

C. Xe-135, U-235, B-10

D. Xe-135, B-10, U-235

ANSWER: D.

TOPIC: 292006
KNOWLEDGE: K1.02 [3.1/3.1]
QID: B256 (P2658)

Compared to other poisons in the core, the two characteristics that cause xenon-135 to be a major reactor poison are its relatively _____ absorption cross section and its relatively _____ variation in concentration for large reactor power changes.

A. small; large

B. small; small

C. large; small

D. large; large

ANSWER: D.

TOPIC: 292006
KNOWLEDGE: K1.02 [3.1/3.1]
QID: B1058 (P1858)

Which one of the following is a characteristic of xenon-135?

A. Thermal neutron flux level affects both the production and removal of xenon-135.

B. Thermal neutrons interact with xenon-135 primarily through scattering reactions.

C. Xenon-135 is primarily a resonance absorber of epithermal neutrons.

D. Xenon-135 is produced from the radioactive decay of barium-135.

ANSWER: A.

TOPIC: 292006
KNOWLEDGE: K1.02 [3.1/3.1]
QID: B1259

Which one of the following exhibits the greatest microscopic cross section for absorption of a thermal neutron in an operating reactor?

A. Uranium-235

B. Uranium-238

C. Plutonium-239

D. Xenon-135

ANSWER: D.

TOPIC: 292006
KNOWLEDGE: K1.02 [3.1/3.1]
QID: B1658 (P2458)

Which one of the following exhibits the greatest microscopic cross section for absorption of a thermal neutron in an operating reactor?

A. Uranium-235

B. Boron-10

C. Samarium-149

D. Xenon-135

ANSWER: D.

TOPIC: 292006
KNOWLEDGE: K1.02 [3.1/3.1]
QID: B3458

Reactors A and B are operating at steady-state 100 percent power with equilibrium xenon-135. The reactors are identical except that reactor A is operating near the end of core life (EOL) and reactor B is operating near the beginning of core life (BOL).

Which reactor has the smaller <u>concentration</u> of xenon-135?

A. Reactor A (EOL), due to the smaller 100 percent power thermal neutron flux.

B. Reactor A (EOL), due to the larger 100 percent power thermal neutron flux.

C. Reactor B (BOL), due to the smaller 100 percent power thermal neutron flux.

D. Reactor B (BOL), due to the larger 100 percent power thermal neutron flux.

ANSWER: B.

TOPIC: 292006
KNOWLEDGE: K1.03 [2.9/2.9]
QID: B257 (P1859)

What is the major contributor to the production of Xe-135 in a reactor that has been operating at full power for two weeks?

A. Radioactive decay of I-135.

B. Radioactive decay of Cs-135.

C. Direct production from fission of U-235.

D. Direct production from fission of U-238.

ANSWER: A.

TOPIC: 292006
KNOWLEDGE: K1.03 [2.9/2.9]
QID: B362 (P358)

Xenon-135 is produced in a reactor by two primary methods. One is directly from fission; the other is from the decay of...

A. cesium-135.

B. iodine-135.

C. xenon-136.

D. iodine-136.

ANSWER: B.

TOPIC: 292006
KNOWLEDGE: K1.03 [2.9/2.9]
QID: B458 (P1359)

A reactor has been operating at full power for several weeks. Xenon-135 is being directly produced as a fission product in approximately _____ percent of all fissions.

A. 100

B. 30

C. 3

D. 0.3

ANSWER: D.

TOPIC: 292006
KNOWLEDGE: K1.03 [2.9/2.9]
QID: B859 (P1559)

Which one of the following correctly describes the production mechanisms of xenon-135 in a reactor that is operating at steady-state 100 percent power?

A. Primarily from fission, secondarily from iodine decay

B. Primarily from fission, secondarily from promethium decay

C. Primarily from iodine decay, secondarily from fission

D. Primarily from promethium decay, secondarily from fission

ANSWER: C.

TOPIC: 292006
KNOWLEDGE: K1.03 [2.9/2.9]
QID: B2558 (P2558)

Reactors A and B are operating at steady-state 100 percent power with equilibrium xenon-135. The reactors are identical except that reactor A is operating near the end of core life (EOL) and reactor B is operating near the beginning of core life (BOL).

Which reactor has the greater concentration of xenon-135, and why?

A. Reactor A (EOL), due to the smaller 100 percent power thermal neutron flux.

B. Reactor A (EOL), due to the larger 100 percent power thermal neutron flux.

C. Reactor B (BOL), due to the smaller 100 percent power thermal neutron flux.

D. Reactor B (BOL), due to the larger 100 percent power thermal neutron flux.

ANSWER: C.

TOPIC: 292006
KNOWLEDGE: K1.04 [2.9/2.9]
QID: B128

Which one of the following describes the change in xenon-135 concentration immediately following a power increase from equilibrium xenon-135 conditions?

A. Initially decreases, due to the decreased rate of xenon-135 production from fission.

B. Initially decreases, due to the increased rate of thermal neutron absorption by xenon-135.

C. Initially increases, due to the increased rate of xenon-135 production from fission.

D. Initially increases, due to the decreased rate of thermal neutron absorption by xenon-135.

ANSWER: B.

TOPIC: 292006
KNOWLEDGE: K1.04 [2.9/2.9]
QID: B258

The two methods of xenon-135 removal from a reactor operating at full power are...

A. gamma decay and beta decay.

B. neutron absorption and fission.

C. fission and gamma decay.

D. beta decay and neutron absorption.

ANSWER: D.

TOPIC: 292006
KNOWLEDGE: K1.04 [2.9/2.9]
QID: B359 (P1059)

Xenon-135 undergoes radioactive decay to...

A. iodine-135.

B. cesium-135.

C. tellurium-135.

D. lanthanum-135.

ANSWER: B.

TOPIC: 292006
KNOWLEDGE: K1.04 [2.9/2.9]
QID: B462 (P460)

Reactor power is increased from 50 percent to 60 percent in one hour. What is the most significant contributor to the initial change in xenon-135 reactivity?

A. Production xenon-135 from fission.

B. Production of xenon-135 from iodine-135 decay.

C. Loss of xenon-135 due to absorption of neutrons.

D. Loss of xenon-135 due to decay to cesium-135.

ANSWER: C.

TOPIC: 292006
KNOWLEDGE: K1.04 [2.9/2.9]
QID: B860

Which one of the following is the approximate half-life of xenon-135?

A. 19 seconds

B. 6.6 hours

C. 9.1 hours

D. 30 hours

ANSWER: C.

TOPIC: 292006
KNOWLEDGE: K1.04 [2.9/2.9]
QID: B959

Which one of the following describes the primary method of xenon-135 removal at steady-state 100 percent power?

A. Decay of xenon-135 to cesium-135.

B. Decay of xenon-135 to iodine-135.

C. Absorption of thermal neutrons.

D. Absorption of fast neutrons.

ANSWER: C.

TOPIC: 292006
KNOWLEDGE: K1.04 [2.9/2.9]
QID: B3358 (P2659)

A nuclear power plant has been operating at 100 percent power for several months. Which one of the following describes the relative contributions of beta decay and neutron capture to xenon-135 removal from the reactor?

A. Primary is neutron capture; secondary is beta decay.

B. Primary is beta decay; secondary is neutron capture.

C. Beta decay and neutron capture contribute equally.

D. Not enough information is given to make a comparison.

ANSWER: A.

TOPIC: 292006
KNOWLEDGE: K1.05 [2.9/2.9]
QID: B58 (P61)

A reactor was operating at 50 percent power for one week when power was ramped to 100 percent. Which one of the following describes the equilibrium xenon-135 concentration at 100 percent power?

A. Twice the 50 percent power concentration.

B. Less than twice the 50 percent power concentration.

C. More than twice the 50 percent power concentration.

D. Remains the same, because it is independent of power.

ANSWER: B.

TOPIC: 292006
KNOWLEDGE: K1.05 [2.9/2.9]
QID: B259 (P1459)

Following a two-week shutdown, a reactor is taken critical and ramped to 100 percent power in 6 hours. How long will it take to achieve an equilibrium xenon-135 condition after the reactor reaches 100 percent power?

A. 70 to 80 hours

B. 40 to 50 hours

C. 8 to 10 hours

D. 1 to 2 hours

ANSWER: B.

TOPIC: 292006
KNOWLEDGE: K1.05 [2.9/2.9]
QID: B658 (P660)

A reactor was operating at 100 percent power for one week when power was decreased to 50 percent. Which one of the following describes the equilibrium xenon-135 concentration at 50 percent power?

A. The same as the 100 percent concentration.

B. More than one-half the 100 percent concentration.

C. Less than one-half the 100 percent concentration.

D. One-half the 100 percent concentration.

ANSWER: B.

TOPIC: 292006
KNOWLEDGE: K1.05 [2.9/2.9]
QID: B1160 (P1158)

A reactor has been operating at 25 percent power for 24 hours following a two-hour power reduction from steady-state 100 percent power. Which one of the following describes the current status of the xenon-135 concentration?

A. At equilibrium.

B. Decreasing toward an upturn.

C. Decreasing toward equilibrium.

D. Increasing toward a peak.

ANSWER: C.

TOPIC: 292006
KNOWLEDGE: K1.05 [2.9/2.9]
QID: B1363

Which one of the following indicates that core Xe-135 is in equilibrium?

A. Xe-135 is being removed equally by neutron capture and decay.

B. The reactor has been operated at a steady-state power level for five days.

C. Xe-135 is being produced equally by fission and I-135 decay.

D. The reactor is currently operating at 100 percent power.

ANSWER: B.

TOPIC: 292006
KNOWLEDGE: K1.05 [2.9/2.9]
QID: B1859

A reactor was operating for 42 weeks at a steady-state 30 percent power when a reactor scram occurred. The reactor was returned to critical after 12 hours and then ramped to 60 percent power over the next 6 hours.

How much time at steady-state 60 percent power will be required to reach an equilibrium xenon-135 concentration?

A. 20 to 30 hours

B. 40 to 50 hours

C. 70 to 80 hours

D. 90 to 100 hours

ANSWER: B.

TOPIC: 292006
KNOWLEDGE: K1.05 [2.9/2.9]
QID: B1960 (P1360)

A reactor has been operating at a constant 50 percent power level for 15 hours following a one-hour power reduction from steady-state 100 percent power. Which one of the following describes the current xenon-135 concentration?

A. Increasing toward a peak.

B. Decreasing toward an upturn.

C. Increasing toward equilibrium.

D. Decreasing toward equilibrium.

ANSWER: D.

TOPIC: 292006
KNOWLEDGE: K1.05 [2.9/2.9]
QID: B2659 (P2159)

Which one of the following indicates that core Xe-135 concentration is in equilibrium?

A. Xe-135 production and removal rates are momentarily equal five hours after a power increase.

B. A reactor has been operated at 80 percent power for five days.

C. Xe-135 is being produced equally by fission and I-135 decay.

D. A reactor is currently operating at 100 percent power.

ANSWER: B.

TOPIC: 292006
KNOWLEDGE: K1.05 [2.9/2.9]
QID: B2760 (P2859)

Reactors A and B are operating at steady-state 100 percent power with equilibrium xenon-135. The reactors are identical except that reactor A is operating near the end of core life (EOL) and reactor B is operating near the beginning of core life (BOL).

Which reactor is experiencing the most negative reactivity from equilibrium xenon-135?

A. Reactor A (EOL), due to a greater equilibrium concentration of xenon-135.

B. Reactor A (EOL), due to lower competition from the fuel for thermal neutrons.

C. Reactor B (BOL), due to a greater thermal neutron flux in the core.

D. Reactor B (BOL), due to a smaller accumulation of fission product poisons.

ANSWER: B.

TOPIC: 292006
KNOWLEDGE: K1.06 [2.7/2.7]
QID: B59

A reactor was operating at 50 percent power for one week when a power increase to 100 percent is initiated. How will the xenon-135 concentration respond?

A. Initially decrease, and then build up to a higher equilibrium concentration.

B. Initially increase, and then build up to a higher equilibrium concentration.

C. Initially decrease, and then return to the same equilibrium concentration.

D. Initially increase, and then return to the same equilibrium concentration.

ANSWER: A.

TOPIC: 292006
KNOWLEDGE: K1.06 [2.7/2.7]
QID: B660

A reactor was operating at 75 percent power for one week when a power decrease to 50 percent is initiated. How will the xenon-135 concentration initially respond?

A. Decreases, because the xenon-135 production rate from fission has decreased.

B. Increases, because the rate of xenon-135 burnout has increased.

C. Decreases, because the rate of xenon-135 decay exceeds the rate of production from fission.

D. Increases, because the concentration of iodine-135 has increased.

ANSWER: B.

TOPIC: 292006
KNOWLEDGE: K1.06 [2.7/2.7]
QID: B961

A reactor was operating at 100 percent power for two weeks when power was reduced to 50 percent in one hour. How will the xenon-135 concentration change during the next 24 hours?

A. Increase and stabilize at a higher concentration.

B. Increase initially, and then decrease and stabilize at a lower concentration.

C. Decrease and stabilize at a lower concentration.

D. Decrease initially, and then increase and stabilize at a higher concentration.

ANSWER: B.

TOPIC: 292006
KNOWLEDGE: K1.06 [2.7/2.7]
QID: B1262 (P1960)

A reactor was operating at 100 percent power for two weeks when power was decreased to 10 percent in one hour. Immediately following the power decrease, xenon-135 concentration will _____ for a period of _____.

A. decrease; 4 to 6 hours

B. increase; 4 to 6 hours

C. decrease; 8 to 11 hours

D. increase; 8 to 11 hours

ANSWER: D.

TOPIC: 292006
KNOWLEDGE: K1.06 [2.7/2.7]
QID: B1860

A reactor has been operating at 50 percent power for 15 hours following a rapid power reduction from steady-state 100 percent power. Which one of the following describes the current xenon-135 concentration?

A. Increasing toward a peak.

B. Decreasing toward an upturn.

C. Increasing toward equilibrium.

D. Decreasing toward equilibrium.

ANSWER: D.

TOPIC: 292006
KNOWLEDGE: K1.06 [2.7/2.7]
QID: B2559 (P3362)

A reactor has been operating at 70 percent power for 20 hours following a one-hour power reduction from steady-state 100 percent power. Which one of the following describes the current xenon-135 concentration?

A. Increasing toward a peak.

B. Decreasing toward an upturn.

C. Decreasing toward equilibrium.

D. At equilibrium.

ANSWER: C.

TOPIC: 292006
KNOWLEDGE: K1.06 [2.7/2.7]
QID: B2761 (P2261)

A reactor has been operating at 50 percent power for 12 hours following a one-hour power reduction from steady-state 100 percent power. Which one of the following describes the current xenon-135 concentration?

A. Increasing toward a peak.

B. Decreasing toward an upturn.

C. Increasing toward equilibrium.

D. Decreasing toward equilibrium.

ANSWER: D.

TOPIC: 292006
KNOWLEDGE: K1.06 [2.7/2.7]
QID: B2960 (P2961)

A reactor has been operating at 30 percent power for 3 hours following a one-hour power reduction from steady-state 100 percent power. Which one of the following describes the current xenon-135 concentration?

A. Increasing toward a peak.

B. Increasing toward equilibrium.

C. Decreasing toward an upturn.

D. Decreasing toward equilibrium.

ANSWER: A.

TOPIC: 292006
KNOWLEDGE: K1.07 [3.2/3.2]
QID: B132

What is the difference in peak xenon-135 concentration following a reactor scram after one week at 100 percent power as compared to a scram after one week at 50 percent power?

A. The time to reach the peak is shorter after a scram from 100 percent power, due to the higher iodine-135 decay rate.

B. The peak concentration after a scram from 50 percent power is smaller in magnitude, due to the lower xenon-135 burnout rate.

C. The peaks are equal, because the decay rate of iodine-135 remains constant.

D. The peak from 100 percent power has a larger magnitude, due to the larger initial iodine-135 concentration.

ANSWER: D.

TOPIC: 292006
KNOWLEDGE: K1.07 [3.2/3.2]
QID: B260

A reactor has been operating at 25 percent power for five days when a scram occurs. Xenon-135 will peak in approximately...

A. 2 hours.

B. 5 hours.

C. 10 hours.

D. 20 hours.

ANSWER: B.

TOPIC: 292006
KNOWLEDGE: K1.07 [3.2/3.2]
QID: B861

Which one of the following equilibrium reactor pre-scram conditions produces the greater amount of negative reactivity from peak xenon-135 conditions after a reactor scram? (BOC -- beginning of a fuel cycle; EOC -- end of a fuel cycle.)

A. BOC and 100 percent power

B. EOC and 100 percent power

C. BOC and 20 percent power

D. EOC and 20 percent power

ANSWER: B.

TOPIC: 292006
KNOWLEDGE: K1.07 [3.2/3.2]
QID: B1361 (P1358)

A reactor has been operating at 75 percent power for two months. A manual reactor scram is required for a test. The scram will be followed immediately by a reactor startup with criticality scheduled to occur 12 hours after the scram.

The greatest assurance that fission product poison reactivity will permit criticality during the startup will exist if the reactor is operated at _____ power for 48 hours prior to the scram; and if criticality is rescheduled for _____ hours after the scram.

A. 100 percent; 8

B. 100 percent; 16

C. 50 percent; 8

D. 50 percent; 16

ANSWER: D.

TOPIC: 292006
KNOWLEDGE: K1.07 [3.2/3.2]
QID: B1561

The amount of negative reactivity associated with peak xenon-135 is smaller after a reactor scram from equilibrium _____ reactor power at the _____ of a fuel cycle.

A. 20 percent; beginning

B. 20 percent; end

C. 100 percent; beginning

D. 100 percent; end

ANSWER: A.

TOPIC: 292006
KNOWLEDGE: K1.07 [3.2/3.2]
QID: B3861 (P3860)

A reactor has been operating at 80 percent power for two months. A manual reactor scram is required for a test. The scram will be followed by a reactor startup with criticality scheduled to occur 24 hours after the scram.

The greatest assurance that xenon-135 reactivity will permit criticality during the reactor startup will exist if the reactor is operated at _____ power for 48 hours prior to the scram; and if criticality is rescheduled for _____ hours after the scram.

A. 60 percent; 18

B. 60 percent; 30

C. 100 percent; 18

D. 100 percent; 30

ANSWER: B.

TOPIC: 292006
KNOWLEDGE: K1.07 [3.2/3.2]
QID: B6031

A reactor scram occurred <u>one</u> <u>hour</u> ago following several months of operation at 100 percent power. Reactor vessel pressure is being maintained at 800 psia and the source range count rate is currently 400 cps. If <u>no</u> operator action is taken, how will the source range count rate respond during the next 24 hours? (Assume a constant source neutron flux.)

A. The count rate will remain about the same.

B. The count rate will decrease for the entire period.

C. The count rate will initially decrease and then increase.

D. The count rate will initially increase and then decrease.

ANSWER: C.

TOPIC 292006
KNOWLEDGE: K1.08 [2.8/3.2]
QID: B135

When comparing control rod worth (CRW) during a reactor startup from 100 percent peak xenon-135 concentration and a reactor startup from xenon-free conditions...

A. center CRW will be higher during the peak xenon startup than during the xenon-free startup.

B. peripheral CRW will be higher during the peak xenon startup than during the xenon-free startup.

C. center and peripheral CRWs will be the same regardless of xenon-135 concentration.

D. it is impossible to determine how xenon-135 will affect the worth of center and peripheral control rods.

ANSWER: B.

TOPIC: 292006
KNOWLEDGE: K1.08 [2.8/3.2]
QID: B261

A reactor has been operating at full power for several weeks when a scram occurs. When the reactor is brought critical 5 hours later, xenon-135 concentration will be <u>highest</u> in the _____ of the core, which causes thermal neutron flux to shift toward the _____ of the core.

A. center; periphery

B. periphery; periphery

C. center; center

D. periphery; center

ANSWER: A.

TOPIC: 292006
KNOWLEDGE: K1.08 [2.8/3.2]
QID: B1062

A reactor is operating at 100 percent power with equilibrium xenon-135 near the beginning of a fuel cycle when a scram occurs. When the reactor is taken critical 5 hours later, xenon-135 distribution will be maximum at the _____ of the core.

A. bottom and center

B. bottom and outer circumference

C. top and center

D. top and outer circumference

ANSWER: A.

TOPIC: 292006
KNOWLEDGE: K1.08 [2.8/3.2]
QID: B2454

Sustained operation at 100 percent power requires periodic withdrawal of control rods to compensate for...

A. buildup of fission product poisons and decreasing control rod worth.

B. fuel depletion and buildup of fission product poisons.

C. decreasing control rod worth and burnable poison burnout.

D. burnable poison burnout and fuel depletion.

ANSWER: B.

TOPIC: 292006
KNOWLEDGE: K1.08 [2.8/3.2]
QID: B2660 (P2359)

Which one of the following explains why xenon-135 oscillations are a concern in a reactor?

A. They can adversely affect core power distribution, and they can require operation below full rated power.

B. They can adversely affect core power distribution, and they can prevent reactor criticality during a reactor startup.

C. They can cause excessively short reactor periods during power operation, and they can require operation below full rated power.

D. They can cause excessively short reactor periods during power operation, and they can prevent reactor criticality during a reactor startup.

ANSWER: A.

TOPIC: 292006
KNOWLEDGE: K1.08 [2.8/3.2]
QID: B2860

A reactor has been operating at 50 percent power for several weeks near the middle of core life with core axial power distribution evenly divided above and below the core midplane. Reactor power is to be increased to 65 percent over a two-hour period using shallow control rods only.

During the power increase, core axial power distribution will...

A. shift toward the top of the core.

B. shift toward the bottom of the core.

C. remain evenly divided above and below the core midplane.

D. have peaks near the top and the bottom of the core.

ANSWER: B.

TOPIC: 292006
KNOWLEDGE: K1.08 [2.8/3.2]
QID: B3061 (P3060)

A reactor has been operating at 100 percent power for one month following a refueling outage with axial neutron flux distribution peaked in the bottom half of the core. An inadvertent reactor scram occurs. The reactor is restarted, with criticality occurring 6 hours after the scram. Reactor power is increased to 60 percent over the next 4 hours and stabilized.

During the one-hour period immediately after power level is stabilized at 60 percent, the core axial neutron flux peak will be located _____ in the core than the pre-scram peak location; and the axial neutron flux peak will be moving _____.

A. higher; upward

B. higher; downward

C. lower; upward

D. lower; downward

ANSWER: B.

TOPIC: 292006
KNOWLEDGE: K1.09 [2.5/2.5]
QID: B262

Following a one-month outage, a reactor is being started up and taken to 100 percent power using a constant ramp rate. To compensate for the effect of xenon-135 while <u>increasing</u> reactor power, it will be necessary to _____ rods and _____ recirculation flow.

A. insert; decrease

B. insert; increase

C. withdraw; increase

D. withdraw; decrease

ANSWER: C.

TOPIC: 292006
KNOWLEDGE: K1.09 [2.5/2.5]
QID: B355 (P353)

A nuclear power plant is being returned to operation following a refueling outage. Fuel preconditioning procedures require reactor power to be increased from 10 percent to 100 percent gradually over a one-week period.

During this slow power increase, most of the positive reactivity added by the operator is required to overcome the negative reactivity from...

A. uranium-235 burnup.

B. xenon-135 buildup.

C. fuel temperature increase.

D. moderator temperature increase.

ANSWER: B.

TOPIC: 292006
KNOWLEDGE: K1.09 [2.5/2.5]
QID: B562 (P561)

Following a 7 day shutdown, a reactor startup is performed and the reactor is taken to 100 percent power over a 16-hour period. After reaching 100 percent power, what type of reactivity addition will be needed to compensate for xenon-135 changes over the next 24 hours?

A. Negative only

B. Negative, then positive

C. Positive only

D. Positive, then negative

ANSWER: C.

TOPIC: 292006
KNOWLEDGE: K1.09 [2.5/2.5]
QID: B2861 (P2260)

A reactor is initially shut down with no xenon-135 in the core. Over the next 4 hours, the reactor is made critical and power level is increased to10 percent. The shift supervisor has directed that power be maintained constant at this level for 12 hours.

To accomplish this objective, control rods will have to be...

A. inserted periodically for the duration of the 12 hours.

B. withdrawn periodically for the duration of the 12 hours.

C. inserted periodically for 4 to 6 hours, and then withdrawn periodically.

D. withdrawn periodically for 4 to 6 hours, and then inserted periodically.

ANSWER: B.

TOPIC: 292006
KNOWLEDGE: K1.09 [2.5/2.5]
QID: B6930

A nuclear power plant was operating at 100 percent power for 3 months near the end of a fuel cycle when a reactor scram occurred. Eighteen hours later, the reactor is critical at the point of adding heat with normal operating reactor vessel temperature and pressure. Power level will be raised to 100 percent over the next 3 hours.

During this power level increase, most of the positive reactivity added by the operator will be required to overcome the negative reactivity from...

A. fuel burnup.

B. xenon-135 buildup.

C. fuel temperature increase.

D. moderator temperature increase.

ANSWER: C.

TOPIC: 292006
KNOWLEDGE: K1.10 [2.9/2.9]
QID: B57

Following a reactor scram from a long steady-state 100 percent power run, a reactor is to be taken critical. The calculated estimated critical conditions (position) are based on having a xenon-free core.

Which one of the following is the shortest time after the initial scram that a xenon-free core will exist?

A. 8 to 10 hours

B. 15 to 25 hours

C. 40 to 50 hours

D. 70 to 80 hours

ANSWER: D.

TOPIC: 292006
KNOWLEDGE: K1.09 [2.5/2.5]
QID: B5631 (P5631)

A reactor has been shut down for 7 days to perform maintenance. A reactor startup is performed, and power level is increased to 50 percent over a two-hour period.

Ten hours after reactor power reaches 50 percent, the magnitude of xenon-135 negative reactivity will be...

A. increasing toward a downturn.

B. increasing toward an equilibrium value.

C. decreasing toward an equilibrium value.

D. decreasing toward an upturn.

ANSWER: B.

TOPIC: 292006
KNOWLEDGE: K1.10 [2.9/2.9]
QID: B1162

A reactor scram recently occurred from steady-state 100 percent power and a reactor startup is currently in progress. Which one of the following sets of initial startup conditions will require the most control rod withdrawal to achieve criticality? (BOC -- beginning of fuel cycle; EOC -- end of fuel cycle.)

	Core Age	Time Since Reactor Scram
A.	BOC	12 hours
B.	BOC	40 hours
C.	EOC	12 hours
D.	EOC	40 hours

ANSWER: C.

TOPIC: 292006
KNOWLEDGE: K1.10 [2.9/2.9]
QID: B1461

A reactor has been operating at 100 percent power for 2 months when a reactor scram occurs. Four hours later, the reactor is critical and stable at 10 percent power.

Which one of the following operator actions is required to maintain reactor power at 10 percent over the next 18 hours?

A. Add positive reactivity during the entire period.

B. Add negative reactivity during the entire period.

C. Add positive reactivity at first, and then negative reactivity.

D. Add negative reactivity at first, and then positive reactivity.

ANSWER: C.

TOPIC: 292006
KNOWLEDGE: K1.10 [2.9/2.9]
QID: B1763 (P1762)

Fifteen hours after a reactor scram from two months operation at 100 percent power, a reactor has achieved criticality. After one additional hour, reactor power is stabilized at 1.0×10^{-4} percent and all control rod motion is stopped.

Which one of the following describes the response of reactor power over the next two hours without any further operator actions?

A. Power increases toward the point of adding heat, due to the decay of Xe-135.

B. Power increases toward the point of adding heat, due to the decay of Sm-149.

C. Power decreases toward a stable shutdown neutron level, due to the buildup of Xe-135.

D. Power decreases toward a stable shutdown neutron level, due to the buildup of Sm-149.

ANSWER: A.

TOPIC: 292006
KNOWLEDGE: K1.10 [2.9/2.9]
QID: B4430

A reactor scram occurred from steady-state 100 percent power and a reactor startup is currently in progress. Which one of the following sets of initial startup conditions will require the smallest amount of control rod withdrawal to achieve criticality? (BOC-- beginning of fuel cycle; EOC -- end of fuel cycle.)

	Core Age	Time Since Reactor Scram
A.	BOC	12 hours
B.	BOC	40 hours
C.	EOC	12 hours
D.	EOC	40 hours

ANSWER: B.

TOPIC: 292006
KNOWLEDGE: K1.11 [2.6/2.7]
QID: B173

A reactor has been operating at 50 percent power for 4 days. Power level is then increased to 100 percent over a one-hour period. After power level reaches 100 percent, how much time will be required for xenon-135 concentration to reach a minimum value?

A. 4 to 8 hours

B. 10 to 15 hours

C. 40 to 50 hours

D. 70 to 80 hours

ANSWER: A.

TOPIC: 292006
KNOWLEDGE: K1.11 [2.6/2.7]
QID: B459 (P260)

Two identical reactors have been operating at a constant power level for one week. Reactor A is at 50 percent power and reactor B is at 100 percent power. If both reactors scram at the same time, xenon-135 negative reactivity will peak first in reactor _____; and the highest xenon-135 reactivity peak will occur in reactor _____.

A. B; B

B. B; A

C. A; B

D. A; A

ANSWER: C.

TOPIC: 292006
KNOWLEDGE: K1.11 [2.6/2.7]
QID: B1362

A reactor has been operating at 100 percent power for two weeks when power is reduced to 50 percent over 2 hours. To maintain power level stable at 50 percent during the next 2 hours, the operator must add _____ reactivity because xenon-135 concentration is _____.

A. positive; decreasing

B. negative; decreasing

C. positive; increasing

D. negative; increasing

ANSWER: C.

TOPIC: 292006
KNOWLEDGE: K1.11 [2.6/2.7]
QID: B1759

Which one of the following describes the change in xenon-135 concentration immediately following a 10 percent power increase from equilibrium 70 percent power over a two-hour period?

A. Xe-135 concentration will initially decrease, due to the increased rate of decay of Xe-135 to Cs-135.

B. Xe-135 concentration will initially decrease, due to the increased absorption of thermal neutrons by Xe-135.

C. Xe-135 concentration will initially increase, due to the increased I-135 production rate from fission.

D. Xe-135 concentration will initially increase, due to the increased Xe-135 production rate from fission.

ANSWER: B.

TOPIC: 292006
KNOWLEDGE: K1.11 [2.6/2.7]
QID: B1761 (P1159)

Two identical reactors have been operating at a constant power level for one week. Reactor A is at 100 percent power and reactor B is at 50 percent power. If both reactors scram at the same time, xenon-135 concentration will peak first in reactor _____; and the highest peak xenon-135 concentration will occur in reactor _____.

A. B; B

B. B; A

C. A; B

D. A; A

ANSWER: B.

TOPIC: 292006
KNOWLEDGE K1.11 [2.6/2.7]
QID: B2063

A reactor had been operating at 50 percent power for two weeks when power was increased to 100 percent over a three-hour period. To maintain reactor power stable during the next 24 hours, which one of the following incremental control rod manipulations will be required?

A. Insert rods slowly during the entire period.

B. Insert rods slowly at first, and then withdraw rods slowly.

C. Withdraw rods slowly during the entire period.

D. Withdraw rods slowly at first, and then insert rods slowly.

ANSWER: B.

TOPIC: 292006
KNOWLEDGE: K1.11 [2.6/2.7]
QID: B2158 (P2061)

A reactor had been operating at 100 percent power for two weeks when power was reduced to 50 percent over a one-hour period. To maintain reactor power stable during the next 24 hours, which one of the following incremental control rod manipulations will be required?

A. Withdraw rods slowly during the entire period.

B. Withdraw rods slowly at first, and then insert rods slowly.

C. Insert rods slowly during the entire period.

D. Insert rods slowly at first, and then withdraw rods slowly.

ANSWER: B.

TOPIC: 292006
KNOWLEDGE: K1.11 [2.6/2.7]
QID: B2259 (P1860)

Which one of the following describes the <u>initial</u> change in xenon-135 concentration immediately following a power increase from steady-state power operation?

A. Decreases, due to the increased rate of xenon-135 radioactive decay.

B. Decreases, due to the increased rate of neutron absorption by xenon-135.

C. Increases, due to the increased xenon-135 production rate from fission.

D. Initially increases, due to the increased iodine-135 production rate from fission.

ANSWER: B.

TOPIC: 292006
KNOWLEDGE: K1.11 [2.6/2.7]
QID: B2361 (P2360)

A reactor had been operating at 70 percent power for two weeks when power was increased to 100 percent over a two-hour period. To offset xenon-135 reactivity changes during the next 12 hours, which one of the following incremental control rod manipulations will be required?

A. Withdraw rods slowly during the entire period.

B. Withdraw rods slowly at first, and then insert rods slowly.

C. Insert rods slowly during the entire period.

D. Insert rods slowly at first, and then withdraw rods slowly.

ANSWER: D.

TOPIC: 292006
KNOWLEDGE: K1.11 [2.6/2.7]
QID: B2561

A reactor is initially operating at 100 percent power with equilibrium xenon-135. Power is decreased to 50 percent over a one-hour period. No subsequent operator actions are taken.

Considering only the reactivity effects of xenon-135 changes, which one of the following describes reactor power 10 hours after the power change is completed?

A. Less than 50 percent and decreasing slowly.

B. Less than 50 percent and increasing slowly.

C. Greater than 50 percent and decreasing slowly.

D. Greater than 50 percent and increasing slowly.

ANSWER: B.

TOPIC: 292006
KNOWLEDGE: K1.11 [2.6/2.7]
QID: B2762

A reactor is initially operating at 60 percent power with equilibrium xenon-135. Power is increased to 80 percent over a two-hour period. No subsequent operator actions are taken.

Considering only the reactivity effects of xenon-135 changes, which one of the following describes reactor power 24 hours after the power change is completed?

A. Greater than 80 percent and decreasing slowly.

B. Greater than 80 percent and increasing slowly.

C. Less than 80 percent and decreasing slowly.

D. Less than 80 percent and increasing slowly.

ANSWER: C.

TOPIC: 292006
KNOWLEDGE: K1.11 [2.6/2.7]
QID: B2862

A reactor has been operating at 50 percent power for 3 hours following a one-hour power reduction from steady-state 100 percent power. Which one of the following describes the current xenon-135 concentration?

A. Increasing toward a peak.

B. Decreasing toward an upturn.

C. Increasing toward equilibrium.

D. Decreasing toward equilibrium.

ANSWER: A.

TOPIC: 292006
KNOWLEDGE: K1.11 [2.6/2.7]
QID: B3259

A reactor is initially operating at equilibrium 100 percent power. An operator inserts control rods intermittently over a period of 30 minutes. At the end of this time period, reactor power is 70 percent.

Assuming no additional operator actions are taken, what will power level be after an additional 60 minutes?

A. 70 percent and stable.

B. Less than 70 percent and slowly increasing.

C. Less than 70 percent and slowly decreasing.

D. Less than 70 percent and stable.

ANSWER: C.

TOPIC: 292006
KNOWLEDGE: K1.12 [2.8/2.3]
QID: B463

A reactor has been operating at 100 percent power for several weeks. Following a reactor scram, the reactor will first be considered xenon-free after...

A. 40 to 50 hours.

B. 70 to 80 hours.

C. 100 to 110 hours.

D. 130 to 140 hours.

ANSWER: B.

TOPIC: 292006
KNOWLEDGE: K1.12 [2.8/2.3]
QID: B1462

A reactor scram has occurred following two months of operation at steady-state 100 percent power. How soon after the scram will the reactor first be considered xenon-free?

A. 8 to 10 hours

B. 24 to 30 hours

C. 40 to 50 hours

D. 70 to 80 hours

ANSWER: D.

TOPIC: 292006
KNOWLEDGE: K1.12 [2.8/2.3]
QID: B2159 (P1063)

A reactor had operated at 100 percent power for three weeks when a reactor scram occurred. Which one of the following describes the concentration of xenon-135 in the core 24 hours after the scram?

A. At least twice the concentration at the time of the scram and decreasing.

B. Less than one-half the concentration at the time of the scram and decreasing.

C. At or approaching a peak concentration.

D. Approximately the same as the concentration at the time of the scram.

ANSWER: D.

TOPIC: 292006
KNOWLEDGE: K1.12 [2.8/2.3]
QID: B2262 (P863)

Twenty-four hours after a reactor scram from 100 percent power with equilibrium xenon-135, the xenon-135 concentration will be approximately...

A. the same as the concentration at the time of the scram and decreasing.

B. the same as the concentration at the time of the scram and increasing.

C. 50 percent lower than the concentration at the time of the scram and decreasing.

D. 50 percent higher than the concentration at the time of the scram and increasing.

ANSWER: A.

TOPIC: 292006
KNOWLEDGE: K1.12 [2.8/2.3]
QID: B2461 (P2262)

Fourteen hours after a reactor scram from 100 percent power equilibrium xenon-135, the concentration of xenon-135 will be _____ than the 100 percent equilibrium xenon-135 concentration; and xenon-135 will have added a net _____ reactivity since the scram.

A. lower; positive

B. lower; negative

C. higher; positive

D. higher; negative

ANSWER: D.

TOPIC: 292006
KNOWLEDGE: K1.12 [2.8/2.3]
QID: B2662

Given:

- A reactor was operating at 100 percent power for six weeks when a scram occurred.
- A reactor startup was performed and criticality was reached 16 hours after the scram.
- Two hours later, the reactor is currently stable at 30 percent power.

If no operator actions occur during the next hour, reactor power will _____ because the xenon-135 concentration is _____.

A. increase; decreasing

B. increase; increasing

C. decrease; decreasing

D. decrease; increasing

ANSWER: A.

TOPIC: 292006
KNOWLEDGE: K1.12 [2.8/2.3]
QID: B2763 (P2762)

A reactor that had been operating at 100 percent power for about two months was shut down over a two-hour period. Following the shutdown, xenon-135 will reach a steady-state concentration in _____ hours.

A. 8 to 10

B. 20 to 25

C. 40 to 50

D. 70 to 80

ANSWER: D.

TOPIC: 292006
KNOWLEDGE: K1.13 [2.6/2.6]
QID: B63

If a reactor that has operated at 100 percent power for 10 days is shut down rapidly, the xenon-135 concentration will...

A. slowly decrease to almost zero in 3 days.

B. increase to a new equilibrium concentration in 3 days.

C. peak in about a half day, and then decrease to almost zero in 3 days.

D. decrease directly with reactor power.

ANSWER: C.

TOPIC: 292006
KNOWLEDGE: K1.13 [2.6/2.6]
QID: B1463

Which one of the following describes a reason for the direction of change in xenon-135 reactivity immediately after a reactor shutdown from long-term power operation?

A. The production rate of Xe-135 from I-135 decay significantly decreases.

B. The production rate of Xe-135 directly from fission significantly decreases.

C. The removal rate of Xe-135 by decay to I-135 significantly decreases.

D. The removal rate of Xe-135 by neutron absorption significantly decreases.

ANSWER: D.

TOPIC: 292006
KNOWLEDGE: K1.14 [3.1/3.2]
QID: B56

A reactor has been shut down for two weeks after six months of 100 percent power operation. A reactor startup is performed and reactor power is stabilized at 10 percent. What control rod movements are required to maintain power level stable at 10 percent over the next two hours?

A. Rod insertions to compensate for samarium-149 burnout.

B. Rod withdrawals to compensate for samarium-149 buildup.

C. Rod insertions to compensate for xenon-135 burnout.

D. Rod withdrawals to compensate for xenon-135 buildup.

ANSWER: D.

TOPIC: 292006
KNOWLEDGE: K1.14 [3.1/3.2]
QID: B62

A reactor had been operating at 100 percent power for about two weeks when power level was reduced to 50 percent in one hour. To compensate for changing xenon-135 concentration during the next 4 hours, the operator must add...

A. positive reactivity, because the xenon-135 concentration is decreasing.

B. negative reactivity, because the xenon-135 concentration is decreasing.

C. positive reactivity, because the xenon-135 concentration is increasing.

D. negative reactivity, because the xenon-135 concentration is increasing.

ANSWER: C.

TOPIC: 292006
KNOWLEDGE: K1.14 [3.1/3.2]
QID: B263

A reactor had been operating at 100 percent power for 10 weeks when a scram occurred. The reactor was made critical 24 hours later, and power level is currently being maintained low in the intermediate range.

To maintain a constant power level for the next several hours, control rods must be...

A. inserted, because xenon-135 burnout will cause increased neutron flux peaking near the periphery of the core.

B. maintained at the present position as xenon-135 establishes equilibrium for the current power level.

C. inserted, because xenon-135 will essentially follow its normal decay curve.

D. withdrawn, because xenon-135 concentration is increasing toward equilibrium.

ANSWER: C.

TOPIC: 292006
KNOWLEDGE: K1.14 [3.1/3.2]
QID: B363

A reactor is initially shut down with <u>no</u> xenon-135 in the core. The reactor is taken critical, and 4 hours later power level is low in the intermediate range. The maintenance department has asked that power be maintained constant at this level for approximately 12 hours.

To maintain a constant power level, the control rods will have to be periodically...

A. withdrawn for the duration of the 12 hours.

B. inserted for the duration of the 12 hours.

C. withdrawn for 4 to 6 hours, and then inserted.

D. inserted for 4 to 6 hours, and then withdrawn.

ANSWER: A.

TOPIC: 292006
KNOWLEDGE: K1.14 [3.1/3.2]
QID: B461

Four hours after a reactor scram from 100 percent power with equilibrium xenon-135, the reactor has been taken critical and is currently at 10 percent power. To maintain power level at 5 percent during the next two hours, the operator must add _____ reactivity because the xenon-135 concentration is _____.

A. positive; increasing

B. positive; decreasing

C. negative; increasing

D. negative; decreasing

ANSWER: A.

TOPIC: 292006
KNOWLEDGE: K1.14 [3.1/3.2]
QID: B964

Sixteen hours after a reactor scram from 100 percent power with equilibrium xenon-135, the concentration of xenon-135 will be...

A. less than 100 percent equilibrium xenon-135, and will have added a net positive reactivity since the scram.

B. greater than 100 percent equilibrium xenon-135, and will have added a net positive reactivity since the scram.

C. less than 100 percent equilibrium xenon-135, and will have added a net negative reactivity since the scram.

D. greater than 100 percent equilibrium xenon-135, and will have added a net negative reactivity since the scram.

ANSWER: D.

TOPIC: 292006
KNOWLEDGE: K1.14 [3.1/3.2]
QID: B1164

A reactor is operating at 100 percent power with equilibrium xenon-135 at the beginning of a fuel cycle when a reactor scram occurs. The reactor is taken critical 4 hours later.

Which one of the following describes the effect of xenon-135 on control rod worth when the reactor becomes critical?

A. Increasing xenon-135 concentration at the periphery of the core will cause periphery rods to exhibit higher worth.

B. Peak thermal flux at the periphery of the core will cause periphery rods to exhibit higher worth.

C. Peak thermal flux at the center of the core will cause center rods to exhibit higher worth.

D. Decreasing xenon-135 concentration at the center of the core will cause center rods to exhibit higher worth.

ANSWER: B.

TOPIC: 292006
KNOWLEDGE: K1.14 [3.1/3.2]
QID: B1663

A reactor is initially operating at 50 percent power with equilibrium xenon-135. Power is level increased to 75 percent over a one-hour period, and <u>no</u> subsequent operator actions are taken. Considering only the reactivity effects of xenon-135 changes, which one of the following describes reactor power 6 hours after the power change?

A. Greater than 75 percent and decreasing slowly.

B. Greater than 75 percent and increasing slowly.

C. Lower than 75 percent and decreasing slowly.

D. Lower than 75 percent and increasing slowly.

ANSWER: A.

TOPIC: 292006
KNOWLEDGE: K1.14 [3.1/3.2]
QID: B1762

A reactor is operating at 100 percent power with equilibrium xenon-135 at the beginning of a fuel cycle when a reactor scram occurs. The reactor is taken critical 4 hours later.

Which one of the following describes the effect of xenon-135 on control rod worth when the reactor becomes critical?

A. High xenon-135 concentration at the periphery of the core will cause peripheral rods to exhibit higher worth.

B. High xenon-135 concentration at the periphery of the core will cause central rods to exhibit higher worth.

C. High xenon-135 concentration at the center of the core will cause peripheral rods to exhibit higher worth.

D. High xenon-135 concentration at the center of the core will cause central rods to exhibit higher worth.

ANSWER: C.

TOPIC: 292006
KNOWLEDGE: K1.14 [3.1/3.2]
QID: B1862 (P361)

A nuclear power plant has been operating at 100 percent power for two months when a reactor scram occurs. Shortly after the reactor scram, a reactor startup is commenced. Four hours after the scram, reactor power is at 5 percent. To maintain reactor power at 5 percent over the next hour, the operator must add...

A. positive reactivity, because the xenon-135 concentration is increasing.

B. negative reactivity, because the xenon-135 concentration is increasing.

C. positive reactivity, because the xenon-135 concentration is decreasing.

D. negative reactivity, because the xenon-135 concentration is decreasing.

ANSWER: A.

TOPIC: 292006
KNOWLEDGE: K1.14 [3.1/3.2]
QID: B2062

A reactor is initially operating at 100 percent power with equilibrium xenon-135. Power level is decreased to 75 percent over a one-hour period and stabilized. No subsequent operator actions are taken.

Considering only the reactivity effects of xenon-135 changes, which one of the following describes reactor power 10 hours after the power change?

A. Greater than 75 percent and decreasing slowly.

B. Greater than 75 percent and increasing slowly.

C. Less than 75 percent and decreasing slowly.

D. Less than 75 percent and increasing slowly.

ANSWER: D.

TOPIC: 292006
KNOWLEDGE: K1.14 [3.1/3.2]
QID: B2263

A reactor is currently operating at 80 percent power immediately after a one-hour power reduction from steady-state 100 percent power. To maintain reactor power at 80 percent over the next 3 hours, the operator must _____ control rods or _____ reactor recirculation flow rate.

A. insert; increase

B. insert; decrease

C. withdraw; increase

D. withdraw; decrease

ANSWER: C.

TOPIC: 292006
KNOWLEDGE: K1.14 [3.1/3.2]
QID: B2964

A reactor is currently operating at 60 percent power immediately after a one-hour power increase from steady-state 40 percent power. To maintain reactor power at 60 percent over the next 2 hours, the operator must _____ control rods or _____ reactor recirculation flow rate.

A. insert; increase

B. insert; decrease

C. withdraw; increase

D. withdraw; decrease

ANSWER: B.

TOPIC: 292006
KNOWLEDGE: K1.14 [3.1/3.2]
QID: B3063

A reactor is initially operating at 100 percent power with equilibrium xenon-135. Power level is decreased to 75 percent over a one-hour period and stabilized. No subsequent operator actions are taken.

Considering only the reactivity effects of xenon-135 changes, which one of the following describes reactor power 30 hours after the power change?

A. Less than 75 percent and increasing slowly.

B. Less than 75 percent and decreasing slowly.

C. Greater than 75 percent and increasing slowly.

D. Greater than 75 percent and decreasing slowly.

ANSWER: C.

TOPIC: 292006
KNOWLEDGE: K1.14 [3.1/3.2]
QID: B3563 (P3563)

A nuclear power plant had been operating at 100 percent power for two months when a reactor scram occurred. Soon afterward, a reactor startup was performed. Twelve hours after the scram, the startup has been paused with reactor power at 5 percent.

To maintain reactor power at 5 percent over the next hour, the operator must add _____ reactivity because the xenon-135 concentration will be _____.

A. positive; increasing

B. negative; increasing

C. positive; decreasing

D. negative; decreasing

ANSWER: D.

TOPIC: 292006
KNOWLEDGE: K1.14 [3.1/3.2]
QID: B3863

A nuclear power plant has been operating at steady-state 100 percent reactor power for three weeks. The operator slowly adds negative reactivity over a period of 15 minutes to reduce reactor power to 90 percent.

Which one of the following describes reactor power 60 minutes after power level reaches 90 percent if no additional operator action is taken?

A. Greater than 90 percent and increasing slowly.

B. Greater than 90 percent and decreasing slowly.

C. Less than 90 percent and increasing slowly.

D. Less than 90 percent and decreasing slowly.

ANSWER: D.

TOPIC: 292006
KNOWLEDGE: K1.14 [3.1/3.2]
QID: B4631

Six hours after a reactor scram from steady-state 100 percent power operation, a reactor is taken critical and power is immediately stabilized low in the intermediate range. To maintain the reactor critical at a constant power level for the next hour, the operator must add _____ reactivity because the xenon-135 concentration is _____.

A. negative; increasing

B. negative; decreasing

C. positive; increasing

D. positive; decreasing

ANSWER: C.

TOPIC: 292006
KNOWLEDGE: K1.14 [3.1/3.2]
QID: B6831 (P6831)

A reactor has been shut down for 7 days following 2 months of steady-state 100 percent power operation. A reactor startup is then performed and the reactor is taken to 100 percent power over a 12-hour period. After 100 percent power is reached, what incremental control rod positioning will be needed to compensate for xenon-135 changes over the next 24 hours?

A. Withdraw rods slowly during the entire period.

B. Withdraw rods slowly at first, and then insert rods slowly.

C. Insert rods slowly during the entire period.

D. Insert rods slowly at first, and then withdraw rods slowly.

ANSWER: A.

TOPIC: 292006
KNOWLEDGE: K1.14 [3.1/3.2]
QID: B7431 (P7431)

A nuclear power plant was initially operating at steady-state 100 percent power at the end of a fuel cycle (EOC) when the plant was shut down for refueling. After refueling, the reactor was restarted and the plant is currently operating at steady-state 100 percent power at the beginning of a fuel cycle (BOC). Assume the average energy released by each fission did not change.

Compared to the equilibrium xenon-135 concentration at 100 percent power just prior to the refueling, the current equilibrium xenon-135 concentration is…

A. greater, because the higher fission rate at BOC produces xenon-135 at a faster rate.

B. greater, because the lower thermal neutron flux at BOC removes xenon-135 at a slower rate.

C. smaller, because the lower fission rate at BOC produces xenon-135 at a slower rate.

D. smaller, because the higher thermal neutron flux at BOC removes xenon-135 at a faster rate.

ANSWER: B.

TOPIC: 292007
KNOWLEDGE: K1.01 [2.9/3.1]
QID: B64

Which one of the following describes burnable poisons?

A. Fuel mixtures containing isotopes with large macroscopic cross sections for scattering to improve neutron thermalization.

B. Thermal neutron absorbing material added to the fuel during manufacturing to increase allowable core fuel load.

C. Thermal neutron absorbing material produced in the non-fissionable fuel isotopes by fast neutron absorption.

D. Fast neutron absorbing material loaded into the upper one-third of the core to aid in flattening the thermal neutron flux.

ANSWER: B.

TOPIC: 292007
KNOWLEDGE: K1.01 [2.9/3.1]
QID: B136

Burnable poisons are placed in a reactor to...

A. increase the amount of fuel that can be loaded into the core.

B. accommodate control rod depletion that occurs over core life.

C. compensate for the buildup of xenon-135 that occurs over core life.

D. ensure that the reactor will always operate in an undermoderated condition.

ANSWER: A.

TOPIC: 292007
KNOWLEDGE: K1.01 [2.9/3.1]
QID: B264

Burnable poisons are loaded into a reactor to...

A. reduce the rod shadowing effect between shallow rods early in core life.

B. provide for flux shaping in areas of deep rods during high power operation.

C. increase the excess reactivity that can be loaded into the core during refueling.

D. ensure the moderator temperature coefficient of reactivity remains negative throughout core life.

ANSWER: C.

TOPIC: 292007
KNOWLEDGE: K1.01 [2.9/3.1]
QID: B364 (P362)

Which one of the following is <u>not</u> a function performed by burnable poisons in an operating reactor?

A. Provide neutron flux shaping.

B. Provide more uniform power density.

C. Offset the effects of control rod burnout.

D. Allow higher enrichment of new fuel assemblies.

ANSWER: C.

TOPIC: 292007
KNOWLEDGE: K1.01 [2.9/3.1]
QID: B1265

Gadolinium (Gd-155, Gd-157) is used instead of boron (B-10) as the _____ material; when compared to boron, gadolinium has a much _____ cross section for absorbing thermal neutrons.

A. control rod; larger

B. burnable poison; larger

C. control rod; smaller

D. burnable poison; smaller

ANSWER: B.

TOPIC: 292007
KNOWLEDGE: K1.01 [2.9/3.1]
QID: B2564 (P2164)

Why are burnable poisons installed in a reactor?

A. To shield reactor fuel from thermal neutron flux until later in core life.

B. To compensate for control rod burnout that occurs over core life.

C. To flatten the radial thermal neutron flux distribution at the end of core life.

D. To ensure a negative moderator temperature coefficient early in core life.

ANSWER: A.

TOPIC: 292007
KNOWLEDGE: K1.03 [2.4/2.7]
QID: B564

At the end of a fuel cycle (EOC), control rods are nearly fully withdrawn at 100 percent power. At the beginning of a fuel cycle (BOC), the control rods are inserted much farther into the core at 100 percent power.

Which one of the following is the primary reason for the change in the full power control rod position?

A. Reactivity from the power defect is much greater at BOC.

B. Reactivity from the void coefficient is much greater at EOC.

C. The excess reactivity in the core is much greater at BOC.

D. The integral control rod worth is much greater at EOC.

ANSWER: C.

TOPIC: 292007
KNOWLEDGE: K1.03 [2.4/2.7]
QID: B1163 (P1264)

Refer to the drawing of K_{eff} versus core age (see figure below).

The major cause for the change in K_{eff} from point 1 to point 2 is the…

A. depletion of fuel.

B. burnout of burnable poisons.

C. initial heatup of the reactor.

D. buildup of fission product poisons.

ANSWER: D.

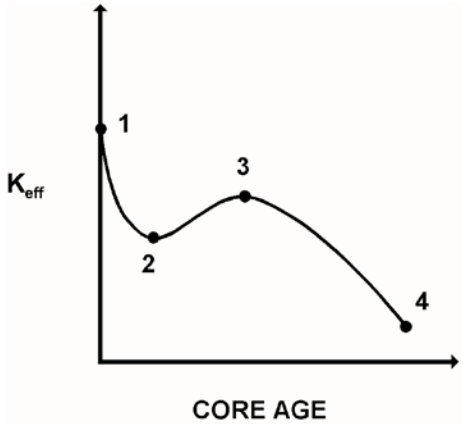

TOPIC: 292007
KNOWLEDGE: K1.03 [2.4/2.7]
QID: B1364

Refer to the drawing of K_{eff} versus core age (see figure below).

The major cause for the change in K_{eff} from point 2 to point 3 is the...

A. depletion of fuel.

B. depletion of control rods.

C. burnout of burnable poisons.

D. burnout of fission product poisons.

ANSWER: C.

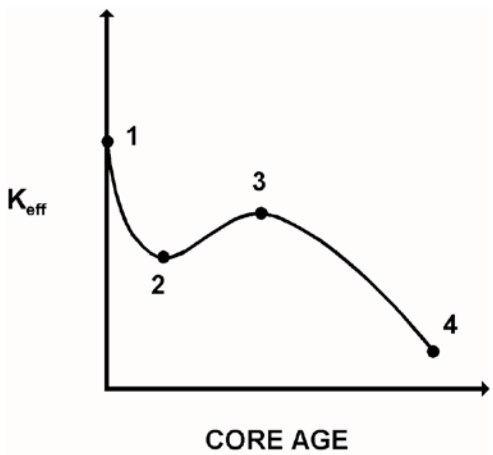

TOPIC: 292007
KNOWLEDGE: K1.03 [2.4/2.7]
QID: B1563

Refer to the drawing of K_{eff} versus core age (see figure below).

The major cause for the change in K_{eff} from point 3 to point 4 is the...

A. depletion of U-235.

B. depletion of U-238.

C. burnout of burnable poisons.

D. buildup of fission product poisons.

ANSWER: A.

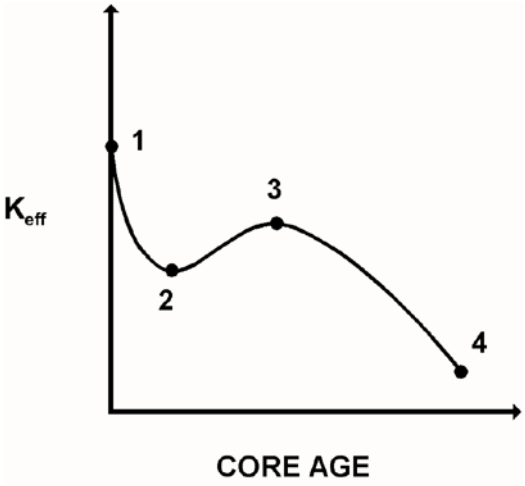

TOPIC: 292007
KNOWLEDGE: K1.03 [2.4/2.7]
QID: B3264

Refer to the curve of K_{eff} versus core age for an operating reactor (see figure below).

The reactor has been operating at 100 percent power for several weeks and is currently operating between points 2 and 3 on the curve.

Assuming reactor recirculation flow rate remains the same, what incremental control rod operation(s) will be needed to maintain 100 percent power until point 3 is reached?

A. Withdrawal for the entire period.

B. Withdrawal at first, then insertion.

C. Insertion for the entire period.

D. Insertion at first, then withdrawal.

ANSWER: C.

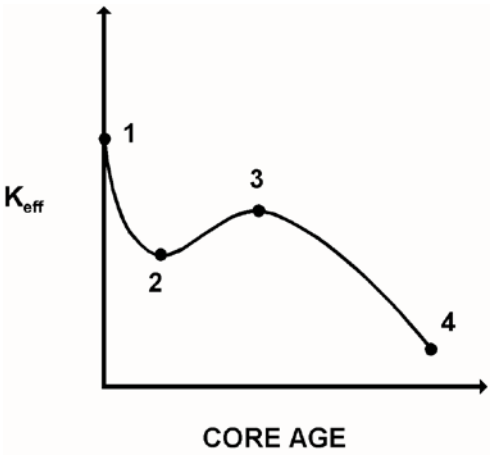

TOPIC: 292007
KNOWLEDGE: K1.03 [2.4/2.7]
QID: B4832

Just prior to a refueling outage, the control rod density at 100 percent power is relatively low. Immediately following the outage, the control rod density at 100 percent power is much higher.

Which one of the following contributes to the need for a much higher 100 percent power control rod density at the beginning of a fuel cycle (BOC) as compared to the end of a fuel cycle (EOC)?

A. The negative reactivity from burnable poisons is greater at BOC.

B. The negative reactivity from fission product poisons is smaller at BOC.

C. The positive reactivity from the fuel in the core is smaller at BOC.

D. The positive reactivity from a unit withdrawal of a typical control rod is greater at BOC.

ANSWER: B.

TOPIC: 292008
KNOWLEDGE: K1.01 [3.8/3.9]
QID: B3365

A nuclear power plant was operating at steady-state 100 percent power near the end of a fuel cycle when a reactor scram occurred. Four hours after the scram, reactor pressure is currently being maintained at 600 psig in anticipation of commencing a reactor startup.

Which one of the following will cause the core fission rate to increase?

A. The operator fully withdraws the first group of control rods.

B. Reactor vessel pressure is allowed to increase by 20 psig.

C. Reactor coolant temperature is allowed to increase by 3°F.

D. An additional 2 hours are allowed to pass with no other changes in plant parameters.

ANSWER: A.

TOPIC: 292008
KNOWLEDGE: K1.01 [3.8/3.9]
QID: B3465

A nuclear power plant was operating at steady-state 100 percent power near the end of a fuel cycle when a reactor scram occurred. Four hours after the scram, reactor pressure is currently being maintained at 600 psig in anticipation of commencing a reactor startup.

Which one of the following will cause the core fission rate to decrease?

A. Core void fraction is decreased by 2 percent.

B. Reactor coolant temperature is allowed to decrease by 3°F.

C. The operator fully withdraws the first group of control rods.

D. An additional 2 hours are allowed to pass with no other changes in plant parameters.

ANSWER: D.

TOPIC: 292008
KNOWLEDGE: K1.02 [3.8/3.8]
QID: B1065

A refueling outage has just been completed, and a reactor startup is being commenced. Which one of the following lists the method(s) used to add positive reactivity during the approach to criticality?

A. Control rods only

B. Recirculation flow only

C. Control rods and recirculation flow

D. Recirculation flow and steaming rate

ANSWER: A.

TOPIC: 292008
KNOWLEDGE: K1.03 [4.1/4.0]
QID: B266 (P65)

While withdrawing control rods during a reactor startup, the stable source range count rate doubled. If the same amount of reactivity that caused the first doubling is added again, the stable count rate will _____; and the reactor will be _____.

A. more than double; subcritical

B. more than double; critical

C. double; subcritical

D. double; critical

ANSWER: B.

TOPIC: 292008
KNOWLEDGE: K1.03 [4.1/4.0]
QID: B1449 (P1348)

A reactor is shut down by 1.8% ΔK/K. Positive reactivity is added that increases the stable source range count rate from 15 cps to 300 cps.

What is the current value of K_{eff}?

A. 0.982

B. 0.990

C. 0.995

D. 0.999

ANSWER: D.

TOPIC: 292008
KNOWLEDGE: K1.03 [4.1/4.0]
QID: B1565 (P1065)

During a reactor startup, equal amounts of positive reactivity are being sequentially added, and the source range count rate is allowed to reach equilibrium after each addition. Which one of the following statements applies for each successive reactivity addition?

A. The time required to reach equilibrium count rate is the same.

B. The time required to reach equilibrium count rate is shorter.

C. The numerical change in equilibrium count rate is greater.

D. The numerical change in equilibrium count rate is the same.

ANSWER: C.

TOPIC: 292008
KNOWLEDGE: K1.03 [4.1/4.0]
QID: B1766 (P2468)

A reactor startup is in progress with a current K_{eff} of 0.95 and a stable source range count rate of 150 cps. Which one of the following stable count rates will occur when K_{eff} becomes 0.98?

A. 210 cps

B. 245 cps

C. 300 cps

D. 375 cps

ANSWER: D.

TOPIC: 292008
KNOWLEDGE: K1.03 [4.1/4.0]
QID: B1849 (P1448)

A subcritical reactor has a stable source range count rate of 150 cps with a shutdown reactivity of -2.0% ΔK/K. Approximately how much positive reactivity must be added to establish a stable count rate of 600 cps?

A. 0.5% ΔK/K

B. 1.0% ΔK/K

C. 1.5% ΔK/K

D. 2.0% ΔK/K

ANSWER: C.

TOPIC: 292008
KNOWLEDGE: K1.03 [4.1/4.0]
QID: B1949 (P448)

A subcritical reactor has a stable source range count rate of 150 cps with a shutdown reactivity of -2.0% ΔK/K. How much positive reactivity must be added to establish a stable count rate of 300 cps?

A. 0.5% ΔK/K

B. 1.0% ΔK/K

C. 1.5% ΔK/K

D. 2.0% ΔK/K

ANSWER: B.

TOPIC: 292008
KNOWLEDGE: K1.03 [4.1/4.0]
QID: B1964

A reactor startup is in progress and the reactor is slightly subcritical with a stable source range count rate. Assuming the reactor remains subcritical, a short control rod <u>withdrawal</u> will cause the reactor period to become positive, and then...

A. gradually lengthen and stabilize at a negative 80-second period.

B. gradually lengthen and stabilize at infinity.

C. gradually lengthen until reactor power reaches the point of adding heat, then stabilize at infinity.

D. gradually lengthen until the neutron population reaches equilibrium, then stabilize at a negative 80-second period.

ANSWER: B.

TOPIC: 292008
KNOWLEDGE: K1.03 [4.1/4.0]
QID: B2069

A reactor startup is in progress with a current K_{eff} of 0.95 and a stable source range count rate of 120 cps. Which one of the following stable count rates will occur when K_{eff} becomes 0.98?

A. 210 cps

B. 245 cps

C. 300 cps

D. 375 cps

ANSWER: C.

TOPIC: 292008
KNOWLEDGE: K1.03 [4.1/4.0]
QID: B2149 (P848)

A subcritical reactor has an initial K_{eff} of 0.8 with a stable source range count rate of 100 cps. If positive reactivity is added until K_{eff} equals 0.95, at what value will the count rate stabilize?

A. 150 cps

B. 200 cps

C. 300 cps

D. 400 cps

ANSWER: D.

TOPIC: 292008
KNOWLEDGE: K1.03 [4.1/4.0]
QID: B2165 (P1766)

A reactor startup is in progress with the reactor currently subcritical.

Which one of the following describes the change in source range count rate resulting from a short control rod withdrawal with K_{eff} at 0.95 as compared to an identical control rod withdrawal with K_{eff} at 0.99? (Assume the reactivity additions are equal and the reactor remains subcritical.)

A. Both the prompt jump in count rate and the increase in stable count rate will be the same.

B. Both the prompt jump in count rate and the increase in stable count rate will be smaller with K_{eff} at 0.95.

C. The prompt jump in count rate will be smaller with K_{eff} at 0.95, but the increase in stable count rate will be the same.

D. The prompt jump in count rate will be the same, but the increase in stable count rate will be smaller with K_{eff} at 0.95.

ANSWER: B.

TOPIC: 292008
KNOWLEDGE: K1.03 [4.1/4.0]
QID: B2365 (P2366)

A reactor startup is in progress with a current K_{eff} of 0.95 and a stable source range count rate of 120 cps. Which one of the following stable count rates will occur when K_{eff} becomes 0.97?

A. 200 cps

B. 245 cps

C. 300 cps

D. 375 cps

ANSWER: A.

TOPIC: 292008
KNOWLEDGE: K1.03 [4.1/4.0]
QID: B2465 (P2466)

A reactor startup is being performed by adding equal amounts of positive reactivity and waiting for neutron population to stabilize. As the reactor approaches criticality, the numerical change in stable neutron population resulting from each reactivity addition will _____; and the time required for the neutron population to stabilize after each reactivity addition will _____.

A. increase; remain the same

B. increase; increase

C. remain the same; remain the same

D. remain the same; increase

ANSWER: B.

TOPIC: 292008
KNOWLEDGE: K1.03 [4.1/4.0]
QID: B2566

A reactor startup is in progress with a current K_{eff} of 0.95 and a stable source range count rate of 120 cps. Which one of the following stable count rates will occur when K_{eff} becomes 0.985?

A. 250 cps

B. 300 cps

C. 350 cps

D. 400 cps

ANSWER: D.

TOPIC: 292008
KNOWLEDGE: K1.03 [4.1/4.0]
QID: B2649 (P2448)

A reactor startup is being performed with xenon-free conditions. Control rod withdrawal is stopped when K_{eff} equals 0.995 and source range count rate stabilizes at 1,000 cps. No additional operator actions are taken.

Which one of the following describes the count rate 20 minutes after rod withdrawal is stopped?

A. Less than 1,000 cps and decreasing toward the prestartup count rate.

B. Less than 1,000 cps and stable above the prestartup count rate.

C. Greater than 1,000 cps and increasing toward criticality.

D. 1,000 cps and constant.

ANSWER: D.

TOPIC: 292008
KNOWLEDGE: K1.03 [4.1/4.0]
QID: B2949

A nuclear power plant is being cooled down from 400°F to 250°F. Just prior to commencing the cooldown, the stable source range count rate was 32 cps. After two hours, with reactor coolant temperature at 300°F, the stable count rate is 64 cps.

Assuming that the moderator temperature coefficient remains constant throughout the cooldown, what will be the status of the reactor when reactor coolant temperature reaches 250°F?

A. Subcritical, with source range count rate below 150 cps.

B. Subcritical, with source range count rate above 150 cps.

C. Critical, with source range count rate below 150 cps.

D. Critical, with source range count rate above 150 cps.

ANSWER: A.

TOPIC: 292008
KNOWLEDGE: K1.03 [4.1/4.0]
QID: B3049 (P3048)

A reactor startup is being commenced with initial source range count rate stable at 20 cps. After a period of control rod withdrawal, count rate stabilizes at 80 cps.

If the total reactivity added by the above control rod withdrawal is 4.5% ΔK/K, how much additional positive reactivity must be inserted to make the reactor critical?

A. 1.5% ΔK/K

B. 2.0% ΔK/K

C. 2.5% ΔK/K

D. 3.0% ΔK/K

ANSWER: A.

TOPIC: 292008
KNOWLEDGE: K1.03 [4.1/4.0]
QID: B3925 (P3925)

A reactor startup is in progress with K_{eff} initially equal to 0.90. By what factor will the core neutron level increase if the reactor is stabilized when K_{eff} equals 0.99?

A. 10

B. 100

C. 1,000

D. 10,000

ANSWER: A.

TOPIC: 292008
KNOWLEDGE: K1.03 [4.1/4.0]
QID: B4225 (P4225)

A reactor is shutdown with a K_{eff} of 0.96 and a stable source range count rate of 50 cps when a reactor startup is commenced. Which one of the following will be the stable count rate when K_{eff} reaches 0.995?

A. 400 cps

B. 800 cps

C. 4,000 cps

D. 8,000 cps

ANSWER: A.

TOPIC: 292008
KNOWLEDGE: K1.03 [4.1/4.0]
QID: B4525 (P4525)

A nuclear power plant is being cooled down from 500°F to 190°F. Just prior to commencing the cooldown, the source range count rate was stable at 32 cps. After two hours, with reactor water temperature at 350°F, the source range count rate is stable at 64 cps.

Assume the moderator temperature coefficient remains constant throughout the cooldown and reactor power remains below the point of adding heat.

Without additional operator action, what will the status of the reactor be when reactor water temperature reaches 190°F?

A. Subcritical, with source range count rate below 150 cps.

B. Subcritical, with source range count rate above 150 cps.

C. Exactly critical.

D. Supercritical.

ANSWER: D.

TOPIC: 292008
KNOWLEDGE: K1.03 [4.1/4.0]
QID: B4533

A reactor is critical in the source range during a reactor startup with a core effective delayed neutron fraction of 0.007. The operator then adds positive reactivity to establish a stable 60-second reactor period.

If the core effective delayed neutron fraction had been 0.005, what would the approximate stable reactor period be after the addition of the same amount of positive reactivity?

A. 28 seconds

B. 32 seconds

C. 36 seconds

D. 40 seconds

ANSWER: D.

TOPIC: 292008
KNOWLEDGE: K1.03 [4.1/4.0]
QID: B5225 (P5225)

A nuclear power plant was initially shutdown with a stable source range count rate of 30 cps. Using many small additions of positive reactivity, a total of 0.1% ΔK/K was added to the core and the stable source range count rate is currently 60 cps.

What was the stable source range count rate after only 0.05% ΔK/K had been added during the above process?

A. 40 cps

B. 45 cps

C. 50 cps

D. 55 cps

ANSWER: A.

TOPIC: 292008
KNOWLEDGE: K1.03 [4.1/4.0]
QID: B5625

A reactor startup is in progress at a BWR nuclear power plant. The following stable conditions currently exist:

Reactor coolant temperature = 180°F
Control rod density = 50 percent
Source range count rate = 32 cps

Control rods are withdrawn to a control rod density of 45 percent, where the source range count rate stabilizes at 48 cps.

Assume that control rod differential reactivity worth remains constant during the withdrawal, reactor coolant temperature remains constant, and no reactor protection actuations occur.

If control rods are withdrawn further to a control rod density of 40 percent, what will be the status of the reactor?

A. Subcritical, with a stable source range count rate of approximately 64 cps.

B. Subcritical, with a stable source range count rate of approximately 96 cps.

C. Critical, with a stable source range count rate of approximately 64 cps.

D. Critical, with a stable source range count rate of approximately 96 cps.

ANSWER: B.

TOPIC: 292008
KNOWLEDGE: K1.03 [4.1/4.0]
QID: B7433 (P5025)

A nuclear power plant is initially shutdown with a K_{eff} of 0.92 and a stable source range count rate of 200 cps. Then a reactor startup is initiated. All control rod motion is stopped when K_{eff} equals 0.995. The instant that rod motion stops, source range count rate is 1,800 cps.

When source range count rate stabilizes, count rate will be approximately...

A. 1,800 cps

B. 2,400 cps

C. 3,200 cps

D. 3,600 cps

ANSWER: C.

TOPIC: 292008
KNOWLEDGE: K1.04 [3.3/3.4]
QID: B67

As a reactor approaches criticality during a reactor startup, it takes longer to reach a stable source range count rate after each control rod withdrawal due to the increased...

A. fraction of fission neutrons leaking from the core.

B. number of neutron generations required to reach a stable neutron level.

C. length of time from neutron generation to absorption.

D. fraction of delayed neutrons appearing as criticality is approached.

ANSWER: B.

TOPIC: 292008
KNOWLEDGE: K1.04 [3.3/3.4]
QID: B365 (P365)

A reactor startup is in progress with a stable source range count rate and the reactor is near criticality. Which one of the following statements describes count rate characteristics during and after a 5-second control rod withdrawal? (Assume the reactor remains subcritical.)

A. There will be no change in count rate until criticality is achieved.

B. The count rate will rapidly increase (prompt jump) to a stable higher value.

C. The count rate will rapidly increase (prompt jump), then gradually increase and stabilize at a higher value.

D. The count rate will rapidly increase (prompt jump), then gradually decrease and stabilize at the original value.

ANSWER: C.

TOPIC: 292008
KNOWLEDGE: K1.04 [3.3/3.4]
QID: B366 (P2265)

With K_{eff} at 0.95 during a reactor startup, source range indication is stable at 100 cps. After a number of control rods have been withdrawn, source range indication stabilizes at 270 cps. What is the current value of K_{eff}?

A. 0.963

B. 0.972

C. 0.981

D. 0.990

ANSWER: C.

TOPIC: 292008
KNOWLEDGE: K1.04 [3.3/3.4]
QID: B865

Which one of the following is considered when calculating the critical rod position for a reactor startup?

A. Core flow rate

B. Source range initial count rate

C. Recirculation ratio

D. Core age

ANSWER: D.

TOPIC: 292008
KNOWLEDGE: K1.04 [3.3/3.4]
QID: B1067 (P1972)

With K_{eff} at 0.92 during a reactor startup, the stable source range count rate is noted to be 780 cps. Later in the same startup, the stable count rate is 4,160 cps.

What is the current value of K_{eff}?

A. 0.945

B. 0.950

C. 0.975

D. 0.985

ANSWER: D.

TOPIC: 292008
KNOWLEDGE: K1.04 [3.3/3.4]
QID: B1566 (P266)

During a reactor startup, the operator adds 1.0% ΔK/K of positive reactivity by withdrawing control rods, thereby increasing the stable source range count rate from 220 cps to 440 cps.

Approximately how much additional positive reactivity is required to raise the stable count rate to 880 cps?

A. 4.0% ΔK/K

B. 2.0% ΔK/K

C. 1.0% ΔK/K

D. 0.5% ΔK/K

ANSWER: D.

TOPIC: 292008
KNOWLEDGE: K1.04 [3.3/3.4]
QID: B2167 (P1867)

During a reactor startup, the first reactivity addition caused the stable source range count rate to increase from 20 cps to 40 cps. The second reactivity addition caused the stable count rate to increase from 40 cps to 80 cps. K_{eff} was 0.92 prior to the first reactivity addition.

Which one of the following statements describes the magnitude of the reactivity additions?

A. The first reactivity addition was approximately twice as large as the second.

B. The second reactivity addition was approximately twice as large as the first.

C. The first and second reactivity additions were approximately the same.

D. There is not enough data given to determine the relationship between reactivity values.

ANSWER: A.

TOPIC: 292008
KNOWLEDGE: K1.04 [3.3/3.4]
QID: B2249 (P2248)

Two reactors are currently shut down with reactor startups in progress. The reactors are identical except that reactor A has a source neutron strength of 100 neutrons per second and reactor B has a source neutron strength of 200 neutrons per second. The control rods are stationary and K_{eff} is 0.98 in both reactors. Core neutron levels have stabilized in both reactors.

Which one of the following lists the core neutron levels (neutrons per second) in reactors A and B?

	Reactor A (n/sec)	Reactor B (n/sec)
A.	5,000	10,000
B.	10,000	20,000
C.	10,000	40,000
D.	20,000	40,000

ANSWER: A.

TOPIC: 292008
KNOWLEDGE: K1.04 [3.3/3.4]
QID: B2266 (P1866)

As a reactor approaches criticality during a reactor startup, it takes longer to reach an equilibrium neutron level after each control rod withdrawal due to the increased...

A. length of time required to complete a neutron generation.

B. number of neutron generations required to reach a stable neutron level.

C. length of time from neutron birth to absorption.

D. fraction of delayed neutrons being produced.

ANSWER: B.

TOPIC: 292008
KNOWLEDGE: K1.04 [3.3/3.4]
QID: B2449

Two reactors are currently shut down with reactor startups in progress. The reactors are identical except that reactor A has a source neutron strength of 100 neutrons per second and reactor B has a source neutron strength of 80 neutrons per second. The control rods are stationary and K_{eff} is 0.98 in both reactors. Core neutron level has stabilized in both reactors.

Which one of the following lists the core neutron levels (neutrons per second) in reactors A and B?

	Reactor A (n/sec)	Reactor B (n/sec)
A.	5,000	4,000
B.	5,000	1,600
C.	2,000	1,600
D.	2,000	400

ANSWER: A.

TOPIC: 292008
KNOWLEDGE: K1.04 [3.3/3.4]
QID: B2765 (P2766)

With K_{eff} at 0.95 during a reactor startup, source range indication is stable at 120 cps. After a period of control rod withdrawal, source range indication stabilizes at 600 cps.

What is the current value of K_{eff}?

A. 0.96

B. 0.97

C. 0.98

D. 0.99

ANSWER: D.

TOPIC: 292008
KNOWLEDGE: K1.04 [3.3/3.4]
QID: B3849 (P3848)

A reactor is shutdown with a K_{eff} of 0.8. The source range count rate is stable at 800 cps. What percentage of the core neutron population is being contributed directly by neutron sources other than neutron-induced fission?

A. 10 percent

B. 20 percent

C. 80 percent

D. 100 percent

ANSWER: B.

TOPIC: 292008
KNOWLEDGE: K1.04 [3.3/3.4]
QID: B6134 (P6133)

A subcritical reactor has a stable source range count rate of 2.0×10^5 cps with a K_{eff} of 0.98. Positive reactivity is added to the core until a stable count rate of 5.0×10^5 cps is achieved. What is the current value of K_{eff}?

A. 0.984

B. 0.988

C. 0.992

D. 0.996

ANSWER: C.

TOPIC: 292008
KNOWLEDGE: K1.04 [3.3/3.4]
QID: B7233

A nuclear power plant is shutdown with the following stable initial conditions:

Reactor coolant temperature:	200°F
Reactor vessel pressure:	300 psia
Source range count rate:	140 cps

Control rods are withdrawn to commence a reactor startup. After 50 units of control rod withdrawal, the equilibrium source range count rate is 280 cps.

Assume that each unit of control rod withdrawal has the same reactivity worth. Also assume that the reactor coolant temperature remains constant, reactor power remains below the point of adding heat, and no reactor protection actuations occur.

What will be the status of the reactor after the control rods are withdrawn a total of 75 units?

A. Subcritical, with equilibrium source range count rate less than 600 cps.

B. Subcritical, with equilibrium source range count rate greater than 600 cps.

C. Critical, with equilibrium source range count rate less than 600 cps.

D. Critical, with equilibrium source range count rate greater than 600 cps.

ANSWER: A.

TOPIC: 292008
KNOWLEDGE: K1.05 [4.3/4.3]
QID: B267

A reactor startup is in progress with K_{eff} at 0.999 and reactor period stable at infinity. If a control rod is withdrawn one notch, reactor period will initially become _____ and then _____. (Assume K_{eff} remains less than 1.0.)

A. positive; approach infinity

B. positive; stabilize at a positive value

C. negative; approach infinity

D. negative; stabilize at a negative value

ANSWER: A.

TOPIC: 292008
KNOWLEDGE: K1.05 [4.3/4.3]
QID: B966

During an initial reactor fuel load, the 1/M factor decreases from 1.0 to 0.5 after the first 100 fuel assemblies are loaded. What is the current value of K_{eff}?

A. 0.2

B. 0.5

C. 0.875

D. 1.0

ANSWER: B.

TOPIC: 292008
KNOWLEDGE: K1.05 [4.3/4.3]
QID: B1365 (P267)

As criticality is approached during a reactor startup, equal insertions of positive reactivity result in a _____ numerical change in the stable source range count rate and a _____ time to reach each new stable count rate.

A. larger; longer

B. larger; shorter

C. smaller; longer

D. smaller; shorter

ANSWER: A.

TOPIC: 292008
KNOWLEDGE: K1.05 [4.3/4.3]
QID: B1665 (P1770)

Refer to the drawing of three 1/M plots labeled A, B, and C (see figure below). Each axis has linear units.

The least conservative approach to criticality is represented by plot _____; which could possibly result from recording source range count rates at _____ time intervals after incremental fuel loading steps as compared to the conditions represented by the other plots.

A. A; shorter

B. A; longer

C. C; shorter

D. C; longer

ANSWER: C.

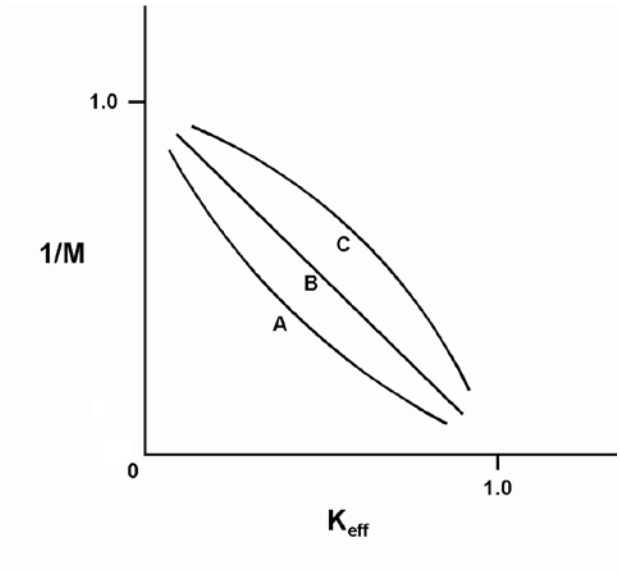

TOPIC: 292008
KNOWLEDGE: K1.05 [4.3/4.3]
QID: B1967 (P1265)

During an initial fuel load, the subcritical multiplication factor increases from 1.0 to 4.0 as the first 100 fuel assemblies are loaded. What is K_{eff} after the first 100 fuel assemblies are loaded?

A. 0.25

B. 0.5

C. 0.75

D. 1.0

ANSWER: C.

TOPIC: 292008
KNOWLEDGE: K1.05 [4.3/4.3]
QID: B3566

A reactor startup is in progress for a reactor that is in the middle of a fuel cycle. The reactor is at normal operating temperature and pressure. The main steam isolation valves are open and the main turbine bypass (also called steam dump) valves are closed. The reactor is near criticality.

Reactor period is stable at infinity when, suddenly, a turbine bypass valve fails open and remains stuck open, dumping steam to the main condenser. The operator immediately ensures no control motion is occurring and takes no further action. Assume the reactor vessel water level remains stable, the reactor does not scram, and no other protective actions occur.

As a result of the valve failure, reactor period will initially become _____; and reactor power will stabilize _____ the point of adding heat.

A. positive; below

B. positive; above

C. negative; below

D. negative; above

ANSWER: D.

TOPIC: 292008
KNOWLEDGE: K1.05 [4.3/4.3]
QID: B3665 (P3665)

Refer to the drawing of a 1/M plot with curves A and B (see figure below). Each axis has linear units.

Curve A would result if each fuel assembly loaded during the early stages of the refueling caused a relatively _____ fractional change in source range count rate compared to the later stages of the refueling; curve B would result if each fuel assembly contained equal _____.

A. small; fuel enrichment

B. small; reactivity

C. large; fuel enrichment

D. large; reactivity

ANSWER: D.

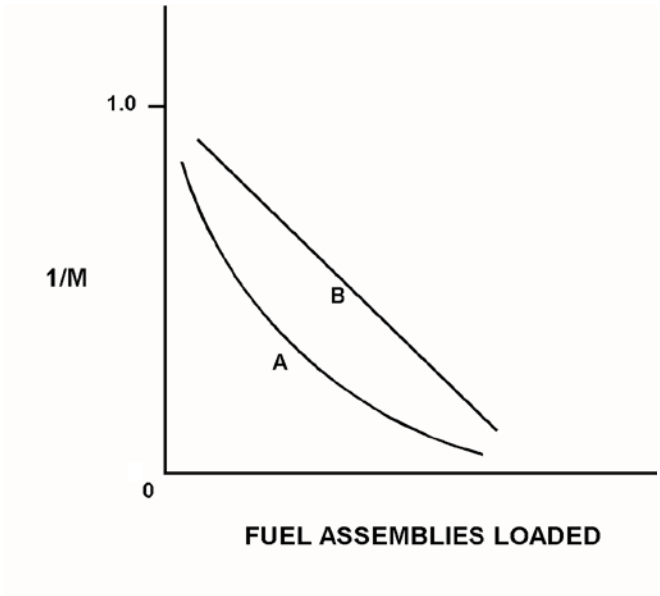

TOPIC: 292008
KNOWLEDGE: K1.05 [4.3/4.3]
QID: B5733 (P5733)

During an initial fuel load, the subcritical multiplication factor increases from 1.0 to 8.0. What is the current value of K_{eff}?

A. 0.125

B. 0.5

C. 0.75

D. 0.875

ANSWER: D.

TOPIC: 292008
KNOWLEDGE: K1.05 [4.3/4.3]
QID: B6033 (P6034)

Refer to the drawing of a 1/M plot with curves A and B (see figure below). Each axis has linear units.

Curve A would result if each fuel assembly loaded during the early stages of core refueling caused a relatively _____ fractional change in stable source range count rate compared to the later stages of the refueling; curve B would result if each fuel assembly contained equal _____.

A. small; fuel enrichment

B. small; reactivity

C. large; fuel enrichment

D. large; reactivity

ANSWER: B.

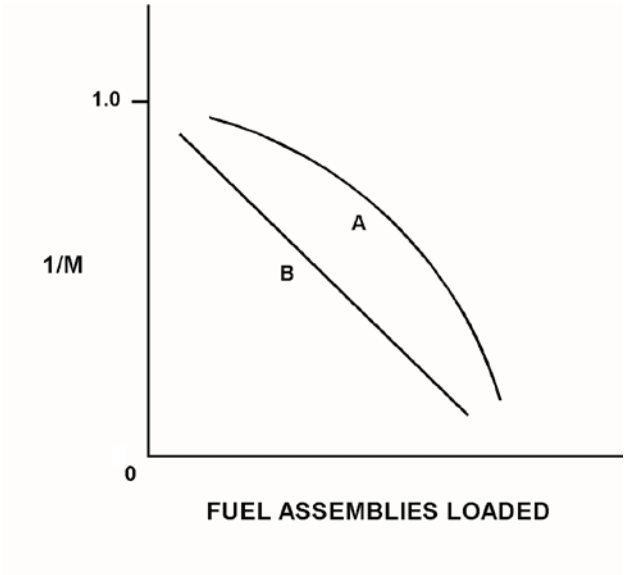

TOPIC: 292008
KNOWLEDGE: K1.06 [4.2/4.2]
QID: B1567 (P1667)

The following data was obtained under stable conditions during a reactor startup:

Control Rod Position (units withdrawn)	Source Range Count Rate (cps)
0	180
5	200
10	225
15	257
20	300
25	360
30	450

Assuming uniform differential rod worth, at what approximate control rod position will criticality occur?

A. 40 units withdrawn

B. 50 units withdrawn

C. 60 units withdrawn

D. 70 units withdrawn

ANSWER: B.

TOPIC: 292008
KNOWLEDGE: K1.06 [4.2/4.2]
QID: B1767 (P1966)

The following data was obtained under stable conditions during a reactor startup:

Control Rod Position (units withdrawn)	Source Range Count Rate (cps)
10	360
15	400
20	450
25	514
30	600
35	720
40	900

Assuming uniform differential rod worth, at what approximate control rod position will criticality occur?

A. 50 units withdrawn

B. 60 units withdrawn

C. 70 units withdrawn

D. 80 units withdrawn

ANSWER: B.

TOPIC: 292008
KNOWLEDGE: K1.06 [4.2/4.2]
QID: B1866

A reactor has just achieved criticality during a xenon-free reactor startup. Instead of stabilizing source range count rate at 1.0×10^3 cps per the startup procedure, the operator inadvertently allows count rate to increase to 1.0×10^4 cps.

Assuming reactor vessel coolant temperature and pressure do not change, the critical rod height at 1.0×10^4 cps will be _____ the critical rod height at 1.0×10^3 cps. (Neglect any effects of changes in fission product poisons.)

A. different, but unpredictable compared to

B. less than

C. greater than

D. equal to

ANSWER: D.

TOPIC: 292008
KNOWLEDGE: K1.06 [4.2/4.2]
QID: B2767 (P1167)

The following data was obtained under stable conditions during a reactor startup:

Control Rod Position (units withdrawn)	Source Range Count Rate (cps)
0	180
10	210
15	250
20	300
25	360
30	420

Assuming uniform differential rod worth, at what approximate control rod position will criticality occur?

A. 35 to 45 units withdrawn

B. 46 to 55 units withdrawn

C. 56 to 65 units withdrawn

D. 66 to 75 units withdrawn

ANSWER: B.

TOPIC: 292008
KNOWLEDGE: K1.07 [3.9/3.9]
QID: B123 (P68)

With K_{eff} at 0.985, how much reactivity must be added to make a reactor exactly critical?

A. 1.54% ΔK/K

B. 1.52% ΔK/K

C. 1.50% ΔK/K

D. 1.48% ΔK/K

ANSWER: B.

TOPIC: 292008
KNOWLEDGE: K1.07 [3.9/3.9]
QID: B667

When a reactor is critical, reactivity is...

A. greater than 1.0% ΔK/K.

B. equal to 1.0% ΔK/K.

C less than 1.0% ΔK/K.

D. undefined.

ANSWER: C.

TOPIC: 292008
KNOWLEDGE: K1.07 [3.9/3.9]
QID: B867 (P2267)

When a reactor is critical, reactivity is...

A. infinity.

B. undefined.

C. 0.0 ΔK/K.

D. 1.0 ΔK/K.

ANSWER: C.

TOPIC: 292008
KNOWLEDGE: K1.08 [4.1/4.1]
QID: B269

During a reactor startup, a stable positive 30-second reactor period has been established and no further reactivity additions are made. The reactor is...

A. exactly critical.

B. supercritical.

C. subcritical.

D. prompt critical.

ANSWER: B.

TOPIC: 292008
KNOWLEDGE: K1.08 [4.1/4.1]
QID: B868

Which one of the following indicates that a reactor has achieved criticality during a normal reactor startup?

A. Constant positive period with no control rod motion.

B. Increasing positive period with no control rod motion.

C. Constant positive period during control rod withdrawal.

D. Increasing positive period during control rod withdrawal.

ANSWER: A.

TOPIC: 292008
KNOWLEDGE: K1.08 [4.1/4.1]
QID: B1069

A reactor is critical just below the point of adding heat (POAH) at a temperature of 160°F. Which one of the following will result in reactor power increasing and stabilizing at the POAH? (Assume a negative moderator temperature coefficient.)

A. Reactor recirculation flow increases 10 percent.

B. Reactor coolant temperature increases 3°F.

C. A single control rod moves in one notch.

D. Core xenon-135 concentration decreases.

ANSWER: D.

TOPIC: 292008
KNOWLEDGE: K1.08 [4.1/4.1]
QID: B2668

A reactor is critical at 1.0 x 10^{-6} percent power. Control rods are withdrawn for 5 seconds and then stopped, resulting in a stable reactor period of positive 100 seconds.

If control rods had been inserted (instead of withdrawn) for 5 seconds with the reactor initially critical at 1.0 x 10^{-6} percent power, the stable reactor period would have been… (Assume equal absolute values of reactivity are added in both cases.)

A. longer than negative 100 seconds, because reactor power decreases are more limited by delayed neutrons than power increases.

B. shorter than negative 100 seconds, because reactor power decreases are less limited by delayed neutrons than power increases.

C. longer than negative 100 seconds, because reactor power decreases result in smaller delayed neutron fractions than power increases.

D. shorter than negative 100 seconds, because reactor power decreases result in larger delayed neutron fractions than power increases.

ANSWER: A.

TOPIC: 292008
KNOWLEDGE: K1.08 [3.3/3.4]
QID: B2966

A reactor startup is in progress. Control rod withdrawal was stopped several minutes ago to assess criticality. Which one of the following is a combination of indications that together support a declaration that the reactor has reached criticality?

A. Period is stable at positive 200 seconds; source range count rate is stable.

B. Period is stable at infinity; source range count rate is stable.

C. Period is stable at positive 200 seconds; source range count rate is slowly increasing.

D. Period is stable at infinity; source range count rate is slowly increasing.

ANSWER: C.

TOPIC: 292008
KNOWLEDGE: K1.08 [4.1/4.1]
QID: B5334 (P5334)

Given:

- Reactors A and B are identical except that reactor A has an effective delayed neutron fraction of 0.0068 and reactor B has an effective delayed neutron fraction of 0.0052.
- Reactor A has a stable period of 45 seconds and reactor B has a stable period of 42 seconds.
- Both reactors are initially operating at 1.0×10^{-8} percent power.

The reactor that is supercritical by the greater amount of positive reactivity is reactor _____; and the first reactor to reach 1.0×10^{-1} percent power will be reactor _____.

A A; A

B. A; B

C. B; A

D. B; B

ANSWER: B.

TOPIC: 292008
KNOWLEDGE: K1.08 [4.1/4.1]
QID: B5534 (P5535)

A reactor is currently operating in the source range with a stable positive 90-second period. The core effective delayed neutron fraction ($\bar{\beta}_{eff}$) is 0.006. How much additional positive reactivity is needed to establish a stable positive 60-second period?

A. 0.026% ΔK/K

B. 0.033% ΔK/K

C. 0.067% ΔK/K

D. 0.086% ΔK/K

ANSWER: A.

TOPIC: 292008
KNOWLEDGE: K1.08 [4.1/4.1]
QID: B6434 (P6435)

A reactor is critical near the end of a fuel cycle with power level stable at 1.0×10^{-10} percent. Which one of the following is the smallest listed amount of positive reactivity that is capable of increasing reactor power level to the point of adding heat?

A. 0.001% ΔK/K

B. 0.003% ΔK/K

C. 0.005% ΔK/K

D. 0.007% ΔK/K

ANSWER: A.

TOPIC: 292008
KNOWLEDGE: K1.08 [4.1/4.1]
QID: B6734 (P6734)

Reactors A and B are identical except that reactor A has an effective delayed neutron fraction of 0.007 and reactor B has an effective delayed neutron fraction of 0.006. Both reactors are initially critical at 1.0×10^{-8} percent of rated thermal power when +0.1% ΔK/K is simultaneously added to both reactors.

Five minutes after the reactivity additions, reactor _____ will be at the higher power level; and reactor _____ will have the shorter period.

A. A; A

B. A; B

C. B; A

D. B; B

ANSWER: D.

TOPIC: 292008
KNOWLEDGE: K1.10 [3.6/3.6]
QID: B468

A reactor is being started up from cold shutdown conditions and currently has a stable positive 100-second reactor period in the intermediate range. Assuming no operator action is taken that affects reactivity, which one of the following describes how reactor period will respond?

A. Remain constant until void production begins in the core.

B. Remain constant until saturation temperature is reached in the core.

C. Increase to infinity after heat production in the core exceeds ambient heat loss.

D. Decrease to zero as the fuel temperature increase adds negative reactivity to the core.

ANSWER: C.

TOPIC: 292008
KNOWLEDGE: K1.10 [3.6/3.6]
QID: B669

A reactor is being started up with a stable positive 100-second period, and power is entering the intermediate range. Assuming no operator action, which one of the following describes the future response of reactor period?

A. Prior to reaching the point of adding heat, the fuel temperature increase will add negative reactivity and reactor period will approach infinity.

B. As heat production in the reactor exceeds ambient heat losses, the temperature of the fuel and moderator will increase, adding negative reactivity, and reactor period will approach infinity.

C. The heat produced by the reactor when operating in the intermediate range is insufficient to raise the fuel or moderator temperatures, and reactor period remains nearly constant throughout the entire intermediate range.

D. As heat production in the reactor exceeds ambient losses, positive reactivity added by the fuel temperature increase counteracts the negative reactivity added by the moderator temperature increase, and reactor period remains nearly constant throughout the entire intermediate range.

ANSWER: B.

TOPIC: 292008
KNOWLEDGE: K1.10 [3.6/3.6]
QID: B2168 (P1870)

A reactor startup is in progress following a one-month shutdown. Upon reaching criticality, the operator establishes a positive 80-second period and stops control rod motion.

After an additional five minutes, reactor power will be _____; and reactor period will be _____. (Assume reactor power remains below the point of adding heat.)

A. constant; constant

B. constant; increasing

C. increasing; constant

D. increasing; increasing

ANSWER: C.

TOPIC: 292008
KNOWLEDGE: K1.10 [3.6/3.6]
QID: B2671

A reactor is being started up under cold shutdown conditions. The reactor has a stable positive 100-second period and power is entering the intermediate range. Assuming no operator action is taken that affects reactivity, reactor period will remain constant until...

A. void production begins in the core, then reactor period will increase toward infinity.

B. core heat production exceeds ambient losses, then reactor period will increase toward infinity.

C. xenon-135 production becomes significant, then reactor period will decrease toward zero.

D. fuel temperature begins to increase, then reactor period will decrease toward zero.

ANSWER: B.

TOPIC: 292008
KNOWLEDGE: K1.11 [3.7/3.8]
QID: B568

After recording critical data during a cold reactor startup with main steam isolation valves open, the operator withdraws the control rods to continue the startup. Which one of the following pairs of parameters will provide the first indications of reaching the point of adding heat?

A. Reactor pressure and reactor water level

B. Reactor power and reactor period

C. Reactor pressure and turbine load

D. Reactor water level and core flow rate

ANSWER: B.

TOPIC: 292008
KNOWLEDGE: K1.11 [3.7/3.8]
QID: B3934 (P3935)

After taking critical data during a reactor startup, the operator establishes a stable 50-second reactor period to increase power to the point of adding heat (POAH). Which one of the following is the approximate amount of reactivity needed to stabilize reactor power at the POAH? (Assume $\bar{\beta}_{eff}$ = 0.006.)

A. -0.01% ΔK/K

B. -0.06% ΔK/K

C. -0.10% ΔK/K

D. -0.60% ΔK/K

ANSWER: C.

TOPIC: 292008
KNOWLEDGE: K1.12 [3.6/3.7]
QID: B133

A reactor is critical well below the point of adding heat when a small amount of positive reactivity is added to the core. If the same amount of negative reactivity is added to the core approximately one minute later, reactor power will stabilize at...

A. the initial power level.

B. somewhat higher than the initial power level.

C. somewhat lower than the initial power level.

D. the subcritical multiplication equilibrium level.

ANSWER: B.

TOPIC: 292008
KNOWLEDGE: K1.12 [3.6/3.7]
QID: B2467

Criticality has just been achieved during a reactor startup at 160°F. The main steam isolation valves are closed (*i.e.*, no steam flow from reactor). The operator withdraws control rods as necessary to establish a stable positive 60-second reactor period. No additional operator actions are taken.

How will reactor power and reactor period respond after the control rod withdrawal? (Assume a negative moderator temperature coefficient.)

A. Reactor power will increase and stabilize at the POAH; reactor period will remain nearly constant until the POAH is reached and then stabilize at infinity.

B. Reactor power will increase and stabilize at the POAH; reactor period will decrease slowly until the POAH is reached and then stabilize at infinity.

C. Reactor power will increase and stabilize above the POAH; reactor period will remain nearly constant until the POAH is reached and then stabilize at infinity.

D. Reactor power will increase and stabilize above the POAH; reactor period will decrease slowly until the POAH is reached and then stabilize at infinity.

ANSWER: A.

TOPIC: 292008
KNOWLEDGE: K1.12 [3.6/3.7]
QID: B1467

A reactor is critical at the point of adding heat (POAH) when a small amount of negative reactivity is added to the core. If the same amount of positive reactivity is added to the core approximately 5 minutes later, reactor power will...

A. stabilize at the equilibrium shutdown neutron level.

B. stabilize at a level lower than the POAH.

C. continue to decrease on a negative 80-second period.

D. stabilize at the POAH.

ANSWER: B.

TOPIC: 292008
KNOWLEDGE: K1.12 [3.6/3.7]
QID: B2268

A reactor startup is in progress and criticality has just been achieved. After recording critical rod heights, the operator withdraws control rods for 20 seconds to establish a stable positive 30-second reactor period. One minute later (well before to the point of adding heat) the operator inserts the same control rods for 25 seconds. (Assume the control rod withdrawal and insertion rates are the same.)

During the rod insertion, the reactor period will become...

A. negative during the entire period of control rod insertion.

B. negative shortly after the control rods pass through the critical rod height.

C. negative just as the control rods pass through the critical rod height.

D. negative shortly before the control rods pass through the critical rod height.

ANSWER: D.

TOPIC: 292008
KNOWLEDGE: K1.12 [3.6/3.7]
QID: B2568 (P2568)

A reactor was operating at 1.0 x 10^{-3} percent power with a positive 60-second reactor period when an amount of negative reactivity was inserted that caused reactor power to decrease with a negative 40-second reactor period.

If an equal amount of positive reactivity is added 5 minutes later, reactor power will...

A. increase and stabilize at the point of adding heat.

B. increase and stabilize at 1.0 x 10^{-3} percent power.

C. continue to decrease with a negative 40-second period until an equilibrium shutdown neutron level is reached.

D. continue to decrease with an unknown period until an equilibrium shutdown neutron level is reached.

ANSWER: A.

TOPIC: 292008
KNOWLEDGE: K1.12 [3.6/3.7]
QID: B2969

A reactor startup is in progress and criticality has just been achieved. After recording the critical rod heights, the operator withdraws a control rod for 20 seconds to establish a stable positive 60-second reactor period. One minute later (well before reaching the point of adding heat), the operator inserts the same control rod for 25 seconds. (Assume the control rod withdrawal and insertion rates are the same.)

During the insertion, when will the reactor period become negative?

A. Immediately when the control rod insertion is initiated.

B. After the control rod passes through the critical rod height.

C. Just as the control rod passes through the critical rod height.

D. Prior to the control rod passing through the critical rod height.

ANSWER: D.

TOPIC: 292008
KNOWLEDGE: K1.12 [3.6/3.7]
QID: B3668

With a reactor initially critical in the source range, a short control rod withdrawal is performed to establish the desired reactor period. Assume that reactor power remains well below the point of adding heat.

Immediately after the control rod withdrawal is stopped, the reactor period will initially lengthen and then...

A. stabilize at a positive value.

B. turn and slowly shorten.

C. stabilize at infinity.

D. continue to slowly lengthen.

ANSWER: A.

TOPIC: 292008
KNOWLEDGE: K1.12 [3.6/3.7]
QID: B4034

With a reactor initially critical in the source range, a constant rate addition of positive reactivity commences and lasts for 120 seconds. Assume that reactor power remains below the point of adding heat for the entire 120-second time interval.

During the 120-second time interval, reactor period will initially shorten and then continue to shorten at a/an _____ rate; and reactor power will initially increase and then continue to increase at a/an _____ rate.

A. decreasing; increasing

B. decreasing; decreasing

C. increasing; increasing

D. increasing; decreasing

ANSWER: A.

TOPIC: 292008
KNOWLEDGE: K1.13 [3.8/3.9]
QID: B271

Upon reaching criticality during a reactor startup, the operator establishes a positive reactor period. Upon reaching the point of adding heat, the period will become _____ due to the _____ reactivity feedback from the moderator and fuel temperatures.

A. shorter; negative

B. shorter; positive

C. longer; negative

D. longer; positive

ANSWER: C.

TOPIC: 292008
KNOWLEDGE: K1.12 [3.6/3.7]
QID: B5833 (P5834)

Refer to the drawing that shows a graph of fission rate versus time (see figure below). Both axes have linear scales.

Which one of the following events, initiated at 0 seconds, would cause the reactor response shown on the graph?

A. A step addition of positive reactivity to a reactor that is initially subcritical in the source range and remains subcritical for the duration of the 120-second interval shown.

B. A step addition of positive reactivity to a reactor that is initially critical in the source range and remains below the point of adding heat for the duration of the 120-second interval shown.

C. A step addition of positive reactivity to a reactor that is initially critical in the power range and remains in the power range for the duration of the 120-second interval shown.

D. A constant rate of positive reactivity addition to a reactor that is initially critical in the power range and remains in the power range for the duration of the 120-second interval shown.

ANSWER: B.

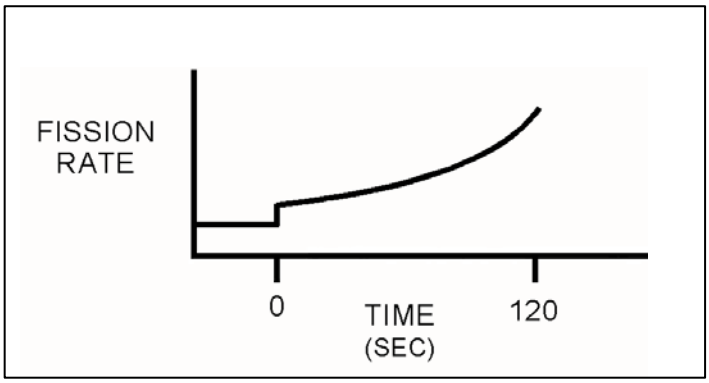

TOPIC: 292008
KNOWLEDGE: K1.13 [3.8/3.9]
QID: B670 (P670)

After taking critical data during a reactor startup, the operator establishes a positive 26-second reactor period to increase power to the point of adding heat (POAH). Which one of the following is the approximate amount of reactivity needed to stabilize reactor power at the POAH? (Assume that $\bar{\beta}_{eff}$ = 0.00579.)

A. -0.16% ΔK/K

B. -0.19% ΔK/K

C. -0.23% ΔK/K

D. -0.29% ΔK/K

ANSWER: A.

TOPIC: 292008
KNOWLEDGE: K1.13 [3.8/3.9]
QID: B968

After taking critical data during a reactor startup, the operator establishes a positive 26-second reactor period to increase power to the point of adding heat (POAH). How much negative reactivity must be added to stabilize power at the POAH? (Assume $\bar{\beta}_{eff}$ = 0.00579.)

A. 0.10% ΔK/K

B. 0.16% ΔK/K

C. 1.0% ΔK/K

D. 1.6% ΔK/K

ANSWER: B.

TOPIC: 292008
KNOWLEDGE: K1.13 [3.8/3.9]
QID: B1667

After taking critical data during a reactor startup, the operator establishes a 38-second reactor period to increase power to the point of adding heat (POAH). Which one of the following is the approximate negative reactivity required to stop the power increase at the POAH? (Assume that $\bar{\beta}_{eff}$ = 0.00579.)

A. 0.01% ΔK/K

B. 0.12% ΔK/K

C. 0.16% ΔK/K

D. 0.21% ΔK/K

ANSWER: B.

TOPIC: 292008
KNOWLEDGE: K1.13 [3.8/3.9]
QID: B1769

After taking critical data during a reactor startup, the operator establishes a positive 31-second reactor period to increase power to the point of adding heat (POAH). Which one of the following is the approximate amount of reactivity needed to stabilize power at the POAH? (Assume $\bar{\beta}_{eff}$ = 0.00579.)

A. -0.14% ΔK/K

B. -0.16% ΔK/K

C. -1.4% ΔK/K

D. -1.6% ΔK/K

ANSWER: A.

TOPIC: 292008
KNOWLEDGE: K1.13 [3.8/3.9]
QID: B2369 (P2370)

After taking critical data during a reactor startup, the operator establishes a positive 48-second reactor period to increase reactor power to the point of adding heat (POAH). Which one of the following is the approximate amount of reactivity needed to stabilize power at the POAH? (Assume $\bar{\beta}_{eff}$ = 0.00579.)

A. +0.10% ΔK/K

B. +0.12% ΔK/K

C. -0.10% ΔK/K

D. -0.12% ΔK/K

ANSWER: C.

TOPIC: 292008
KNOWLEDGE: K1.13 [3.8/3.9]
QID: B3068 (P3068)

After taking critical data during a reactor startup, the operator establishes a positive 34-second reactor period to increase power to the point of adding heat (POAH). Which one of the following is the approximate amount of reactivity needed to stabilize reactor power at the POAH? (Assume $\bar{\beta}_{eff}$ = 0.0066.)

A. -0.10% ΔK/K

B. -0.12% ΔK/K

C. -0.15% ΔK/K

D. -0.28% ΔK/K

ANSWER: C.

TOPIC: 292008
KNOWLEDGE: K1.14 [3.5/3.5]
QID: B769

During a reactor heatup, if a center control rod is notched outward with no subsequent operator action, the heatup rate will...

A. increase initially, then gradually decrease.

B. decrease initially, then gradually increase.

C. increase and stabilize at a new higher value.

D. decrease and stabilize at a new lower value.

ANSWER: A.

TOPIC: 292008
KNOWLEDGE: K1.14 [3.5/3.5]
QID: B1071

A reactor heatup from 180°F to 500°F is in progress. To maintain a constant heatup rate as reactor temperature increases, reactor power will have to...

A. increase, due to increasing density of water.

B. decrease, due to decreasing specific heat of water.

C. increase, due to increasing heat losses to ambient.

D. decrease, due to decreasing heat of vaporization of water.

ANSWER: C.

TOPIC: 292008
KNOWLEDGE: K1.14 [3.5/3.5]
QID: B1468

A nuclear power plant is undergoing a startup with the reactor coolant initially saturated at 508°F. The main steam isolation valves are closed and reactor criticality has been achieved. The reactor currently has a stable positive 100-second reactor period with reactor power well below the point of adding heat (POAH).

Which one of the following will occur first when reactor power reaches the POAH?

A. Reactor period will shorten.

B. Reactor pressure will increase.

C. Reactor coolant temperature will decrease.

D. Intermediate range power level will decrease.

ANSWER: B.

TOPIC: 292008
KNOWLEDGE: K1.14 [3.5/3.5]
QID: B6335

A nuclear power plant is undergoing a startup with the reactor coolant initially saturated at 508°F. The main steam isolation valves are closed and reactor criticality has been achieved. The reactor currently has a stable positive 100-second reactor period with reactor power well below the point of adding heat (POAH).

Which one of the following will occur first when reactor power reaches the POAH?

A. Reactor power will decrease.

B. Reactor period will lengthen.

C. Reactor pressure will increase.

D. Reactor coolant temperature will increase.

ANSWER: B.

TOPIC: 292008
KNOWLEDGE: K1.15 [3.7/3.7]
QID: B469

A reactor is initially stable at the point of adding heat (POAH) with a reactor coolant temperature of 160°F. Control rods are withdrawn a few notches to raise reactor power and establish a heatup rate. Assume no core voiding occurs unless otherwise stated.

If no further control rod movement occurs, reactor power will initially increase and then...

A. remain stable until voiding begins to occur.

B. continue to increase until the control rods are reinserted.

C. decrease and stabilize at a subcritical power level.

D. decrease and stabilize at the POAH.

ANSWER: D.

TOPIC: 292008
KNOWLEDGE: K1.15 [3.7/3.7]
QID: B1966

A reactor startup is in progress at the beginning of core life. Reactor power is 5×10^{-3} percent and increasing slowly with a stable period of 87 seconds. Assuming no operator action, no reactor scram, and no steam release, what will reactor power be after 10 minutes?

A. Below the point of adding heat (POAH).

B. At the POAH.

C. Above the POAH but less than 49 percent.

D. Approximately 50 percent.

ANSWER: B.

TOPIC: 292008
KNOWLEDGE: K1.15 [3.7/3.7]
QID: B2569

A reactor is at 1.0 x 10^{-3} percent power with a stable period of positive 60 seconds at the beginning of a fuel cycle. Assuming no operator action, no reactor scram, and no steam release, what will reactor power be after 10 minutes?

A. Below the point of adding heat (POAH).

B. At the POAH.

C. Approximately 22 percent.

D. Greater than 100 percent.

ANSWER: B.

TOPIC: 292008
KNOWLEDGE: K1.15 [3.7/3.7]
QID: B3051 (P3050)

A reactor startup is in progress with the reactor at normal operating temperature and pressure. With reactor power stable at the point of adding heat, a control rod malfunction causes an inadvertent rod withdrawal that results in adding 0.3% ΔK/K reactivity.

Given:

- All control rod motion has been stopped.
- No automatic system or operator actions occur to inhibit the power increase.
- Power coefficient equals -0.04% ΔK/K/percent.
- The effective delayed neutron fraction equals 0.006.

What is the approximate power level increase required to offset the reactivity added by the inadvertent control rod withdrawal? (Ignore any reactivity effects from changes in fission product poisons.)

A. 3.0 percent

B. 5.0 percent

C. 6.7 percent

D. 7.5 percent

ANSWER: D.

TOPIC: 292008
KNOWLEDGE: K1.15 [3.7/3.7]
QID: B4325 (P4327)

A reactor startup is in progress with the reactor at normal operating temperature and pressure. With reactor power stable at the point of adding heat, a control rod malfunction causes an inadvertent rod withdrawal that results in adding 0.2% ΔK/K reactivity.

Given:

- All control rod motion has been stopped.
- No automatic system or operator actions occur to inhibit the power increase.
- Power coefficient equals -0.04% ΔK/K/percent.
- The effective delayed neutron fraction equals 0.006.

What is the approximate reactor power level increase required to offset the reactivity added by the inadvertent control rod withdrawal? (Ignore any reactivity effects from changes in fission product poisons.)

A. 3.3 percent

B. 5.0 percent

C. 6.7 percent

D. 7.5 percent

ANSWER: B.

TOPIC: 292008
KNOWLEDGE: K1.15 [3.7/3.7]
QID: B6736 (P6727)

A reactor startup is in progress with the reactor at normal operating temperature and pressure. With reactor power stable at the point of adding heat, a control rod malfunction causes a short rod withdrawal that increases reactivity by 0.14% ΔK/K.

Given:

- All control rod motion has stopped.
- No automatic system or operator actions occur to inhibit the power increase.
- Power coefficient equals -0.028% ΔK/K/percent.
- The effective delayed neutron fraction equals 0.006.

What is the approximate power level increase required to offset the reactivity added by the control rod withdrawal? (Ignore any reactivity effects from changes in fission product poisons.)

A. 2.0 percent

B. 5.0 percent

C. 20 percent

D. 50 percent

ANSWER: B.

TOPIC: 292008
KNOWLEDGE: K1.16 [3.6/3.7]
QID: B870

During a reactor heatup, reactor pressure was increased from 5 psig to 50 psig in a 2-hour period. What was the average heatup rate?

A. 35°F/hr

B. 60°F/hr

C. 70°F/hr

D. 120°F/hr

ANSWER: A.

TOPIC: 292008
KNOWLEDGE: K1.16 [3.6/3.7]
QID: B1972

A reactor is critical and a reactor coolant heatup is in progress with coolant temperature currently at 140°F. If the point of adding heat is initially 0.1 percent reactor power, and reactor power is held constant at 3 percent during the heatup, which one of the following describes the coolant heatup rate (HUR) from 140°F to 200°F?

A. HUR will initially decrease and then increase.

B. HUR will slowly decrease during the entire period.

C. HUR will slowly increase during the entire period.

D. HUR will remain the same during the entire period.

ANSWER: B.

TOPIC: 292008
KNOWLEDGE: K1.18 [3.8/3.8]
QID: B1270

Which one of the following will add the <u>most</u> positive reactivity during a power decrease from 100 percent to 65 percent over a one hour period? (Assume the power change is performed only by changing core recirculation flow rate.)

A. Fuel temperature change

B. Moderator temperature change

C. Fission product poison change

D. Core void fraction change

ANSWER: A.

TOPIC: 292008
KNOWLEDGE: K1.18 [3.8/3.8]
QID: B1371 (P1470)

With a reactor on a constant period, which one of the following power changes requires the <u>longest</u> time to occur?

A. 1.0×10^{-8}% to 4.0×10^{-8}%

B. 5.0×10^{-8}% to 1.5×10^{-7}%

C. 2.0×10^{-7}% to 3.5×10^{-7}%

D. 4.0×10^{-7}% to 6.0×10^{-7}%

ANSWER: A.

TOPIC: 292008
KNOWLEDGE: K1.18 [3.8/3.8]
QID: B1570 (P1567)

With a reactor on a constant period, which one of the following power changes requires the <u>least</u> amount of time to occur?

A. 1.0×10^{-8}% to 6.0×10^{-8}%

B. 1.0×10^{-7}% to 2.0×10^{-7}%

C. 2.0×10^{-7}% to 3.5×10^{-7}%

D. 4.0×10^{-7}% to 6.0×10^{-7}%

ANSWER: D.

TOPIC: 292008
KNOWLEDGE: K1.18 [3.8/3.8]
QID: B1765

Which one of the following lists the method(s) used to add positive reactivity during a normal power increase from 10 percent to 100 percent?

A. Control rod withdrawal only.

B. Recirculation pump flow increase only.

C. Control rod withdrawal and recirculation pump flow increase.

D. Recirculation pump flow increase and steaming rate increase.

ANSWER: C.

TOPIC: 292008
KNOWLEDGE: K1.18 [3.8/3.8]
QID: B2070 (P2071)

Ignoring the effects of changes in fission product poisons, which one of the following power changes requires the greatest amount of positive reactivity addition?

A. 3 percent to 5 percent

B. 5 percent to 15 percent

C. 15 percent to 30 percent

D. 30 percent to 60 percent

ANSWER: D.

TOPIC: 292008
KNOWLEDGE: K1.18 [3.8/3.8]
QID: B2072 (P2069)

With a reactor on a constant period, which one of the following power changes requires the longest amount of time to occur?

A. 3.0×10^{-8}% to 5.0×10^{-8}%

B. 5.0×10^{-8}% to 1.5×10^{-7}%

C. 1.5×10^{-7}% to 3.0×10^{-7}%

D. 3.0×10^{-7}% to 6.0×10^{-7}%

ANSWER: B.

TOPIC: 292008
KNOWLEDGE: K1.18 [3.8/3.8]
QID: B2166

A reactor is operating at 80 percent power near the end of a fuel cycle. Which one of the following lists the typical method(s) used to increase power to 100 percent?

A. Withdrawal of deep control rods and increasing recirculation flow rate.

B. Withdrawal of deep control rods only.

C. Withdrawal of shallow control rods and increasing recirculation flow rate.

D. Withdrawal of shallow control rods only.

ANSWER: A.

TOPIC: 292008
KNOWLEDGE: K1.18 [3.8/3.8]
QID: B2270

With a reactor on a constant period, which one of the following power changes requires the shortest time to occur?

A. 1.0×10^{-8}% to 4.0×10^{-8}%

B. 5.0×10^{-8}% to 1.5×10^{-7}%

C. 2.0×10^{-7}% to 3.5×10^{-7}%

D. 4.0×10^{-7}% to 6.0×10^{-7}%

ANSWER: D.

TOPIC: 292008
KNOWLEDGE: K1.18 [3.8/3.8]
QID: B2470 (P2851)

Ignoring the effects of changes in fission product poisons, which one of the following power changes requires the greatest amount of positive reactivity addition?

A. 3 percent to 10 percent

B. 10 percent to 25 percent

C. 25 percent to 60 percent

D. 60 percent to 100 percent

ANSWER: D.

TOPIC: 292008
KNOWLEDGE: K1.18 [3.8/3.8]
QID: B2669 (P2169)

Ignoring the effects of changes in fission product poisons, which one of the following power changes requires the smallest amount of positive reactivity addition?

A. 2 percent to 5 percent

B. 5 percent to 15 percent

C. 15 percent to 30 percent

D. 30 percent to 50 percent

ANSWER: A.

TOPIC: 292008
KNOWLEDGE: K1.18 [3.8/3.8]
QID: B2770 (P2770)

With a reactor on a constant period, which one of the following power changes requires the least amount of time to occur?

A. 3.0×10^{-8}% to 5.0×10^{-8}%

B. 5.0×10^{-8}% to 1.5×10^{-7}%

C. 1.5×10^{-7}% to 3.0×10^{-7}%

D. 3.0×10^{-7}% to 6.0×10^{-7}%

ANSWER: A.

TOPIC: 292008
KNOWLEDGE: K1.18 [3.8/3.8]
QID: B3769 (P3753)

Ignoring the effects of changes in fission product poisons, which one of the following power changes requires the smallest amount of positive reactivity addition?

A. 3 percent to 10 percent

B. 10 percent to 15 percent

C. 15 percent to 30 percent

D. 30 percent to 40 percent

ANSWER: B.

TOPIC: 292008
KNOWLEDGE: K1.18 [3.8/3.8]
QID: B5034 (P2953)

Ignoring the effects of changes in fission product poisons, which one of the following reactor power changes requires the greatest amount of positive reactivity addition?

A. 3 percent to 10 percent

B. 10 percent to 25 percent

C. 25 percent to 65 percent

D. 65 percent to 100 percent

ANSWER: C.

TOPIC: 292008
KNOWLEDGE: K1.19 [3.1/3.2]
QID: B69

With a nuclear power plant operating at steady-state 45 percent power, for which one of the following events will the Doppler coefficient act first to change the reactivity of the core?

A. A control rod drop.

B. The loss of one feedwater heater (extraction steam isolated).

C. Tripping of the main turbine.

D. A safety relief valve opening.

ANSWER: A.

TOPIC: 292008
KNOWLEDGE: K1.19 [3.1/3.2]
QID: B367

Reactor power was increased from 20 percent to 30 percent in one hour using only control rod withdrawal. Which one of the following describes the response of void fraction during the power increase?

A. Void fraction initially decreases, then increases back to the original value.

B. Void fraction initially increases, then decreases back to the original value.

C. Void fraction decreases and stabilizes below the original value.

D. Void fraction increases and stabilizes above the original value.

ANSWER: D.

TOPIC: 292008
KNOWLEDGE: K1.19 [3.1/3.2]
QID: B1169

Which one of the following describes the core void fraction response that accompanies a reactor power increase from 20 percent to 30 percent using only control rod withdrawal?

A. Decreases and stabilizes at a lower void fraction.

B. Increases and stabilizes at a higher void fraction.

C. Initially decreases, then increases and stabilizes at the initial void fraction.

D. Initially increases, then decreases and stabilizes at the initial void fraction.

ANSWER: B.

TOPIC: 292008
KNOWLEDGE: K1.19 [3.1/3.2]
QID: B1368

A reactor is operating at 90 percent power late in core life. When an operator withdraws a shallow control rod two notches, a power <u>decrease</u> occurs. This power decrease can be attributed to differential rod worth being _____ and _____ bundle void content.

A. high; decreased

B. high; increased

C. low; increased

D. low; decreased

ANSWER: C.

TOPIC: 292008
KNOWLEDGE: K1.19 [3.5/3.6]
QID: B1671 (P1672)

A refueling outage has just been completed in which one-third of the core was replaced with new fuel assemblies. A reactor startup has been performed to begin the sixth fuel cycle, and reactor power is being increased to 100 percent.

Which one of the following pairs of reactor fuels will provide the greatest contribution to core heat production when the reactor reaches 100 percent power?

A. U-235 and U-238

B. U-238 and Pu-239

C. U-235 and Pu-239

D. U-235 and Pu-241

ANSWER: C.

TOPIC: 292008
KNOWLEDGE: K1.19 [3.1/3.2]
QID: B2354

A reactor is initially operating at steady-state 20 percent power when power is increased to 40 percent. In comparison to the operating conditions at 20 percent power, when the plant stabilizes at 40 percent power, reactor vessel pressure will be _____, and reactor vessel water temperature will be _____.

A. the same; the same

B. the same; higher

C. higher; the same

D. higher; higher

ANSWER: D.

TOPIC: 292008
KNOWLEDGE: K1.19 [3.1/3.2]
QID: B2670

A reactor was operating with the following initial conditions:

Power level = 100 percent
Control rod density = 60 percent

After a power decrease, current reactor conditions are as follows:

Power level = 80 percent
Control rod density = 62 percent

All parameters attained steady-state values before and after the power change.

Given the following:

Total control rod
reactivity change = -2.2×10^{-1}% ΔK/K
Power coefficient = -1.5×10^{-2} % ΔK/K/% power

How much reactivity was added by changes in core recirculation flow rate during the load decrease? (Assume fission product poison reactivity does <u>not</u> change.)

A. 0.0% ΔK/K

B. -5.2×10^{-1}% ΔK/K

C. -2.0×10^{-1}% ΔK/K

D. -8.0×10^{-2}% ΔK/K

ANSWER: D.

TOPIC: 292008
KNOWLEDGE: K1.19 [3.1/3.2]
QID: B2970

If a reactor power increase is accomplished using only the control rods, which one of the following would result in the greatest amount of negative reactivity feedback from the void coefficient?

A. A void fraction increase from 5 percent to 10 percent near the beginning of a fuel cycle.

B. A void fraction increase from 5 percent to 10 percent near the end of a fuel cycle.

C. A void fraction increase from 40 percent to 45 percent near the beginning of a fuel cycle.

D. A void fraction increase from 40 percent to 45 percent near the end of a fuel cycle.

ANSWER: C.

TOPIC: 292008
KNOWLEDGE: K1.20 [3.3/3.4]
QID: B70

With a nuclear power plant initially operating at steady-state 100 percent power and 100 percent core flow rate, reactor power is reduced to 90 percent by inserting control rods. (Assume that recirculation pump speed and valve positions do <u>not</u> change.)

What is the effect of the power reduction on core flow rate?

A. Core flow rate will increase, due to a decrease in recirculation ratio.

B. Core flow rate will increase, due to a decrease in two-phase flow resistance.

C. Core flow rate will decrease, due to an increase in recirculation ratio.

D. Core flow rate will decrease, due to an increase in two-phase flow resistance.

ANSWER: B.

TOPIC: 292008
KNOWLEDGE: K1.20 [3.3/3.4]
QID: B1469

Which one of the following parameter changes will occur if reactor power is increased from 70 percent to 90 percent by changing recirculation flow?

A. Core void fraction increases.

B. Feedwater temperature decreases.

C. Reactor vessel outlet steam pressure increases.

D. Condensate depression in the main condenser hotwell increases.

ANSWER: C.

TOPIC: 292008
KNOWLEDGE: K1.21 [2.9/3.0]
QID: B270

A nuclear power plant has been operating at steady-state 100 percent power for several months. Following a normal reactor shutdown, the rate of core decay heat production will depend on the...

A. rate of reactor power decrease from 100 percent to the point of adding heat.

B. pressure being maintained in the reactor pressure vessel (RPV).

C. pre-shutdown power level and the time elapsed since shutdown.

D. recirculation flow rate and the water level being maintained in the RPV.

ANSWER: C.

TOPIC: 292008
KNOWLEDGE: K1.21 [2.9/3.0]
QID: B1372 (P1272)

Following a reactor shutdown from three months of operation at 100 percent power, the core decay heat production rate will depend on the...

A. amount of fuel that has been depleted.

B. amount of time that has elapsed since K_{eff} decreased below 1.0.

C. amount of time required for the reactor pressure vessel to cool down.

D. rate at which the photoneutron source strength decays following shutdown.

ANSWER: B.

TOPIC: 292008
KNOWLEDGE: K1.21 [2.9/3.0]
QID: B3169

A nuclear power plant is initially operating at steady-state 60 percent power in the middle of a fuel cycle when a turbine control system malfunction closes the turbine steam inlet valves an additional 5 percent. Which one of the following describes the <u>initial</u> reactor power change and the cause for the power change?

A. Decrease, because the rate of neutron absorption in the moderator initially increases.

B. Decrease, because the rate of neutron absorption at U-238 resonance energies initially increases.

C. Increase, because the rate of neutron absorption in the moderator initially decreases.

D. Increase, because the rate of neutron absorption at U-238 resonance energies initially decreases.

ANSWER: D.

TOPIC: 292008
KNOWLEDGE: K1.21 [2.9/3.0]
QID: B4036

A nuclear power plant is operating at 60 percent power in the middle of a fuel cycle when a turbine control system malfunction opens the turbine steam inlet valves an additional 5 percent. Which one of the following describes the initial reactor power change and the cause for the power change?

A. Decrease, because the rate of neutron absorption in the moderator initially increases.

B. Decrease, because the rate of neutron absorption at U-238 resonance energies initially increases.

C. Increase, because the rate of neutron absorption in the moderator initially decreases.

D. Increase, because the rate of neutron absorption at U-238 resonance energies initially decreases.

ANSWER: B.

TOPIC: 292008
KNOWLEDGE: K1.21 [2.9/3.0]
QID: B4735

A nuclear power plant is initially operating at steady-state 60 percent power when a main steamline break occurs that releases a constant 5 percent of rated main steam flow. The plant stabilizes as follows:

- No operator or protective actions occur.
- Automatic pressure control returns reactor pressure to its initial value.
- Feedwater injection temperature remains the same.

Compared to the initial operating conditions, current reactor power is approximately _____; and current turbine power is approximately _____.

A. the same; 5 percent lower

B. the same; the same

C. 5 percent higher; 5 percent lower

D. 5 percent higher; the same

ANSWER: A.

TOPIC: 292008
KNOWLEDGE: K1.22 [3.5/3.6]
QID: B570

A nuclear power plant is initially operating at steady-state 50 percent power when a steam line break occurs that releases a constant 5 percent of rated steam flow.

- No operator or protective actions occur.
- Automatic pressure control returns reactor pressure to its initial value.
- Feedwater injection temperature remains the same.

In response to the steam line break, reactor power will…

A. decrease and stabilize at a lower power level.

B. increase and stabilize at a higher power level.

C. decrease at first, then increase and stabilize near the initial power level.

D. increase at first, then decrease and stabilize near the initial power level.

ANSWER: C.

TOPIC: 292008
KNOWLEDGE: K1.22 [3.5/3.6]
QID: B971

A nuclear power plant is operating at steady-state 85 percent power when a failure of the turbine control system opens the turbine control valves to admit 10 percent more steam flow to the main turbine. No operator actions occur and no protective system actuations occur. The turbine control valves remain in the failed position.

In response to the above, reactor power will…

A. increase until power level matches the new steam demand.

B. increase continuously and exceed reactor protection set points.

C. decrease and stabilize at a lower power level above the point of adding heat.

D. decrease and stabilize at a critical power level below the point of adding heat.

ANSWER: C.

TOPIC: 292008
KNOWLEDGE: K1.22 [3.5/3.6]
QID: B1670

A nuclear power plant is operating normally at 50 percent of rated power when a main steamline break occurs that continuously releases 5 percent of rated steam flow. Assume no operator or protective actions occur, automatic pressure control returns reactor pressure to its initial value, and feedwater injection temperature remains the same.

How will turbine power respond to the main steamline break?

A. Decrease and stabilize at a lower power level.

B. Increase and stabilize at a higher power level.

C. Initially decrease, then increase and stabilize at the previous power level.

D. Initially increase, then decrease and stabilize at the previous power level.

ANSWER: A.

TOPIC: 292008
KNOWLEDGE: K1.22 [3.5/3.6]
QID: B2371

A nuclear power plant is operating at steady-state 90 percent power. If a turbine control system malfunction opens the turbine steam inlet valves an additional 5 percent, reactor power will initially...

A. increase, due to positive reactivity addition from the void coefficient only.

B. increase, due to positive reactivity addition from the void and moderator temperature coefficients.

C. decrease, due to negative reactivity addition from the void coefficient only.

D. decrease, due to negative reactivity addition from the void and moderator temperature coefficients.

ANSWER: C.

TOPIC: 292008
KNOWLEDGE: K1.22 [3.5/3.6]
QID: B2571

A nuclear power plant is operating at steady-state 50 percent power. If a steam break occurs that releases 5 percent of rated steam flow, reactor power will initially...

A. increase, due to positive reactivity addition from the void coefficient only.

B. increase, due to positive reactivity addition from the void and moderator temperature coefficients.

C. decrease, due to negative reactivity addition from the void coefficient only.

D. decrease, due to negative reactivity addition from the void and moderator temperature coefficients.

ANSWER: C.

TOPIC: 292008
KNOWLEDGE: K1.23 [2.6/3.1]
QID: B368

Which one of the following is the purpose of a rod sequence exchange?

A. Ensures proper rod coupling.

B. Prevents rod shadowing.

C. Promotes even fuel burnout.

D. Minimizes water hole peaking.

ANSWER: C.

TOPIC: 292008
KNOWLEDGE: K1.23 [2.6/3.1]
QID: B2572

During continuous reactor power operation, rod sequence exchanges are performed periodically to...

A. ensure some control rods remain inserted as deep control rods until late in the fuel cycle.

B. allow the local power range monitoring nuclear instruments to be asymmetrically installed in the core.

C. increase the rod worth of control rods that are nearly fully withdrawn.

D. prevent the development of individual control rods with very high reactivity worths.

ANSWER: D.

TOPIC: 292008
KNOWLEDGE: K1.25 [2.8/2.9]
QID: B72 (P71)

Shortly after a reactor scram, reactor power indicates 5.0×10^{-2} percent when a stable negative reactor period is attained. Approximately how much additional time is required for reactor power to decrease to 5.0×10^{-3} percent?

A. 90 seconds

B. 180 seconds

C. 270 seconds

D. 360 seconds

ANSWER: B.

TOPIC: 292008
KNOWLEDGE: K1.25 [2.8/2.9]
QID: B771 (P770)

Which one of the following determines the value of the stable negative reactor period observed shortly after a reactor scram?

A. The shortest-lived delayed neutron precursors.

B. The longest-lived delayed neutron precursors.

C. The shutdown margin just prior to the scram.

D. The worth of the inserted control rods.

ANSWER: B.

TOPIC: 292008
KNOWLEDGE: K1.25 [2.8/2.9]
QID: B1369 (P1965)

Shortly after a reactor scram, reactor power indicates 1.0×10^{-3} percent when a stable negative period is attained. Reactor power will decrease to 1.0×10^{-4} percent in approximately _____ seconds.

A. 380

B. 280

C. 180

D. 80

ANSWER: C.

TOPIC: 292008
KNOWLEDGE: K1.25 [2.8/2.9]
QID: B1770 (P2171)

Following a reactor scram, reactor power indicates 0.1 percent when the typical stable post-scram reactor period is observed. Approximately how much additional time is required for reactor power to decrease to 0.05 percent?

A. 24 seconds

B. 55 seconds

C. 173 seconds

D. 240 seconds

ANSWER: B.

TOPIC: 292008
KNOWLEDGE: K1.25 [2.8/2.9]
QID: B2071

A nuclear power plant is operating at 100 percent power near the end of core life when a single main steam isolation valve suddenly closes. Prior to a reactor scram, reactor power will initially...

A. increase, due to positive reactivity addition from the void coefficient only.

B. increase, due to positive reactivity addition from the void and moderator coefficients.

C. decrease, due to negative reactivity addition from the Doppler coefficient only.

D. decrease, due to negative reactivity addition from the Doppler and moderator temperature coefficients.

ANSWER: A.

TOPIC: 292008
KNOWLEDGE: K1.25 [2.8/2.9]
QID: B2769 (P2768)

Reactors A and B are identical and have operated at 100 percent power for six months when a reactor scram occurs simultaneously on both reactors. All control rods fully insert, except for one reactor B control rod that remains fully withdrawn.

Which reactor, if any, will have the longer reactor period five minutes after the scram, and why?

A. Reactor A, due to the greater shutdown reactivity.

B. Reactor B, due to the smaller shutdown reactivity.

C. Both reactors will have the same reactor period because both reactors will be stable at a power level low in the source range.

D. Both reactors will have the same reactor period because only the longest-lived delayed neutron precursors will be releasing fission neutrons.

ANSWER: D.

TOPIC: 292008
KNOWLEDGE: K1.25 [2.8/2.9]
QID: B3271 (P3271)

Reactors A and B are identical and have operated at 100 percent power for six months when a reactor scram occurs simultaneously on both reactors. All reactor A control rods fully insert. One reactor B control rod sticks fully withdrawn, but all others fully insert.

When compared to reactor B at five minutes after the scram, the fission rate in reactor A will be _____; and the reactor period in reactor A will be _____.

A. the same; shorter

B. the same; the same

C. smaller; shorter

D. smaller; the same

ANSWER: D.

TOPIC: 292008
KNOWLEDGE: K1.25 [2.8/2.9]
QID: B3472

A reactor is critical just below the point of adding heat when an inadvertent reactor scram occurs. All control rods fully insert except for one rod, which remains fully withdrawn. Five minutes after the reactor scram, with reactor period stable at approximately -80 seconds, the remaining withdrawn control rod suddenly and rapidly fully inserts.

Which one of the following describes the reactor response to the insertion of the last control rod?

A. The negative period will remain stable at approximately -80 seconds.

B. The negative period will immediately become shorter, and then lengthen and stabilize at approximately -80 seconds.

C. The negative period will immediately become shorter, and then lengthen and stabilize at a value shorter than -80 seconds.

D. The negative period will immediately become shorter, and then lengthen and stabilize at a value shorter than -80 seconds.

ANSWER: B.

TOPIC: 292008
KNOWLEDGE: K1.25 [2.8/2.9]
QID: B3771

A nuclear power plant has been operating at 100 percent power for two months when a reactor scram occurs. Five minutes after the scram, with all control rods still fully inserted, a count rate of 5,000 cps is indicated on the source range nuclear instruments with a reactor period of negative 80 seconds.

The majority of the source range detector output is currently being caused by detector interactions with…

A. intrinsic source neutrons.

B. fission gammas from previous power operation.

C. fission neutrons from subcritical multiplication.

D. delayed fission neutrons from previous power operation.

ANSWER: D.

TOPIC: 292008
KNOWLEDGE: K1.25 [2.8/2.9]
QID: B4736

Reactors A and B are identical and have operated at 100 percent power for six months when a reactor scram occurs simultaneously on both reactors. All reactor A control rods fully insert. One reactor B control rod remains fully withdrawn, but all others fully insert.

When compared to reactor A at 10 minutes after the scram, the fission rate in reactor B will be _____; and the reactor period in reactor B will be _____.

A. higher; longer

B. higher; the same

C. the same; longer

D. the same; the same

ANSWER: B.

TOPIC: 292008
KNOWLEDGE: K1.25 [2.8/2.9]
QID: B7036

A nuclear power plant is operating at steady-state 100 percent power when a reactor scram occurs. As a result of the scram, the core neutron flux will initially decrease on a period that is much _____ than -80 seconds; and the period will become approximately -80 seconds about _____ minutes after the scram.

A. longer; 3

B. longer; 30

C. shorter; 3

D. shorter; 30

ANSWER: C.

TOPIC: 292008
KNOWLEDGE: K1.26 [3.4/3.7]
QID: B471

A nuclear power plant was operating at steady-state 100 percent power when one recirculation pump tripped. Reactor power decreased and stabilized at a lower power level. Which one of the following reactivity coefficients caused the initial decrease in reactor power?

A. Void coefficient

B. Pressure coefficient

C. Moderator temperature coefficient

D. Fuel temperature (Doppler) coefficient

ANSWER: A.

TOPIC: 292008
KNOWLEDGE: K1.26 [3.4/3.7]
QID: B672

A nuclear power plant is operating at steady-state 70 percent of rated power when one recirculation pump trips. Reactor power will initially _____ because of the effects of the _____ coefficient.

A. decrease; void

B. increase; moderator temperature

C. decrease; moderator temperature

D. increase; void

ANSWER: A.

TOPIC: 292008
KNOWLEDGE: K1.27 [3.4/3.5]
QID: B126

A reactor is critical in the source range when a fully withdrawn control rod fully inserts into the core.

If no operator or automatic actions occur, how will the source range count rate respond?

A. Decrease to zero.

B. Decrease to the count rate produced by the source neutron flux.

C. Decrease to a count rate greater than that produced by the source neutron flux.

D. Decrease initially and then slowly increase and stabilize at the critical count rate.

ANSWER: C.

TOPIC: 292008
KNOWLEDGE: K1.27 [3.4/3.5]
QID: B1472

A nuclear power plant is initially operating at steady-state 100 percent power when a control rod fully inserts into the core. Assume the reactor does <u>not</u> scram. With <u>no</u> operator action, reactor power will initially decrease and then...

A. return to 100 percent with the void boundary lower in the core.

B. stabilize at a lower power level with the void boundary lower in the core.

C. return to 100 percent with the void boundary higher in the core.

D. stabilize at a lower power level with the void boundary higher in the core.

ANSWER: D.

TOPIC: 292008
KNOWLEDGE: K1.27 [3.4/3.5]
QID: B1969 (P672)

A reactor is critical below the point of adding heat when a fully withdrawn control rod fully inserts into the core. Assuming no operator or automatic actions, core neutron flux will slowly decrease to...

A. zero.

B. an equilibrium value less than the source neutron flux.

C. an equilibrium value greater than the source neutron flux.

D. a slightly lower value, then slowly return to the initial value.

ANSWER: C.

TOPIC: 292008
KNOWLEDGE: K1.27 [3.4/3.5]
QID: B7336

A nuclear reactor initially has a K_{eff} of 0.999 and a stable source range count rate. Control rods are inserted until K_{eff} decreases to 0.998, resulting in a negative reactor period. After the control rod insertion stops, reactor period will...

A. gradually lengthen until the neutron population reaches equilibrium, then stabilize at infinity.

B. gradually lengthen until the neutron population reaches equilibrium, then stabilize at an unknown negative value.

C. quickly stabilize at approximately negative 80 seconds until the neutron population approaches equilibrium, then gradually lengthen and stabilize at infinity.

D. quickly stabilize at an unknown negative value until the neutron population approaches equilibrium, then gradually lengthen and stabilize at an unknown negative value.

ANSWER: A.

TOPIC: 292008
KNOWLEDGE: K1.30 [3.2/3.5]
QID: B131 (P2672)

Which one of the following approximates the fission product decay heat produced in a reactor at one second and one hour following a reactor scram from long-term operation at 100 percent power?

	One Second	One Hour
A.	15.0%	1.0%
B.	7.0%	1.0%
C.	1.0%	0.1%
D.	0.5%	0.1%

ANSWER: B.

TOPIC: 292008
KNOWLEDGE: K1.30 [3.2/3.5]
QID: B372 (P370)

After one month of operation at 100 percent power, the fraction of rated thermal power being produced from the decay of fission products in an operating reactor is...

A. greater than 10 percent.

B. greater than 5 percent, but less than 10 percent.

C. greater than 1 percent, but less than 5 percent.

D. less than 1 percent.

ANSWER: B.

TOPIC: 292008
KNOWLEDGE: K1.30 [3.2/3.5]
QID: B2272 (P572)

A nuclear power plant has been operating at 100 percent power for several weeks when a reactor scram occurs. How much time will be required for core decay heat production to decrease to one percent power following the scram?

A. 1 to 8 seconds

B. 1 to 8 minutes

C. 1 to 8 hours

D. 1 to 8 days

ANSWER: C.

TOPIC: 292008
KNOWLEDGE: K1.30 [3.2/3.5]
QID: B2872 (P2872)

A reactor has been shut down for several weeks when a loss of all AC power results in a loss of forced coolant flow through the reactor vessel (RV).

Given the following information:

Reactor rated thermal power	= 2,800 MWt
Decay heat rate	= 0.2% rated thermal power
RV ambient heat loss rate	= 2.4 MWt
RV coolant specific heat	= 1.1 Btu/lbm-°F
RV coolant inventory	= 325,000 lbm

What will the average reactor vessel heatup rate be during the 20 minutes immediately after forced decay heat removal flow is lost? Assume that <u>only</u> ambient losses are removing heat from the reactor vessel?

A. Less than 25°F/hour

B. 26 to 50°F/hour

C. 51 to 75°F/hour

D. More than 76°F/hour

ANSWER: B.

TOPIC: 292008
KNOWLEDGE: K1.30 [3.2/3.5]
QID: B2972 (P2972)

A nuclear power plant has been operating for one hour at 50 percent power following six months of operation at steady-state 100 percent power. What percentage of rated thermal power is currently being generated by fission product decay?

A. 1 percent to 2 percent

B. 3 percent to 5 percent

C. 6 percent to 8 percent

D. 9 percent to 11 percent

ANSWER: B.

TOPIC: 292008
KNOWLEDGE: K1.30 [3.2/3.5]
QID: B4336 (P4336)

A nuclear power plant has been operating at 100 percent power for six months when a reactor scram occurs. Which one of the following describes the source(s) of core heat generation 30 minutes after the reactor scram?

A. Fission product decay is the <u>only</u> significant source of core heat generation.

B. Delayed neutron-induced fission is the <u>only</u> significant source of core heat generation.

C. Fission product decay and delayed neutron-induced fission are <u>both</u> significant sources and produce approximately equal rates of core heat generation.

D. Fission product decay and delayed neutron-induced fission are <u>both</u> insignificant sources and generate core heat at rates that are less than the rate of ambient heat loss from the core.

ANSWER: A.

TOPIC: 293001
KNOWLEDGE: K1.03 [2.5/2.7]
QID: B73 (P2673)

Refer to the drawing of a water-filled manometer (see figure below).

The manometer is installed across an orifice in a ventilation duct to determine the direction of airflow. With the manometer conditions as shown, the pressure at P1 is _____ than P2; and the direction of airflow is _____.

A. greater; left to right

B. greater; right to left

C. less; left to right

D. less; right to left

ANSWER: A.

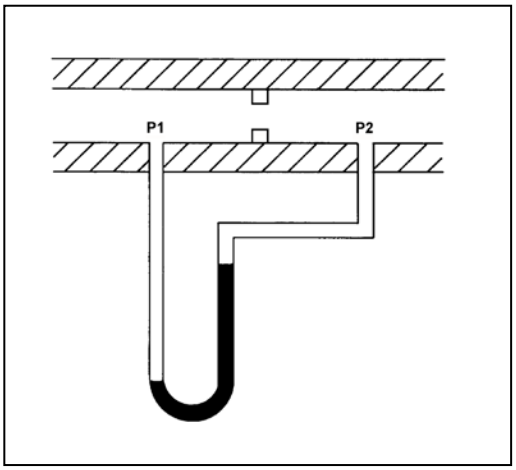

TOPIC: 293001
KNOWLEDGE: K1.03 [2.5/2.7]
QID: B373 (P374)

Refer to the drawing of two water storage tanks with four differential pressure (D/P) level detectors (see figure below).

The tanks are identical and are being maintained at the same constant water level with 17 psia gas pressure above the water. The tanks are surrounded by standard atmospheric pressure. The temperature of the water in the tanks and reference legs is 70°F.

Which one of the level detectors is sensing the greatest D/P?

A. No. 1

B. No. 2

C. No. 3

D. No. 4

ANSWER: B.

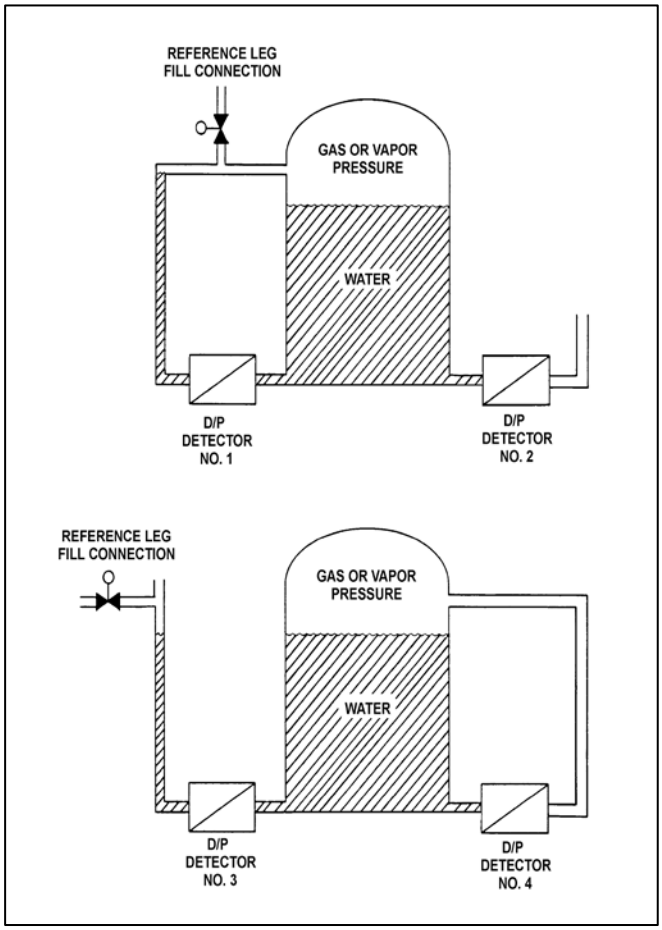

TOPIC: 293001
KNOWLEDGE: K1.03 [2.5/2.7]
QID: B673 (P2973)

Refer to the drawing of a water-filled manometer (see figure below).

The manometer is installed across an orifice in a ventilation duct to determine the direction of airflow. With the manometer conditions as shown, the pressure at P1 is _____ than P2; and the direction of airflow is _____.

A. less; right to left

B. less; left to right

C. greater; right to left

D. greater; left to right

ANSWER: A.

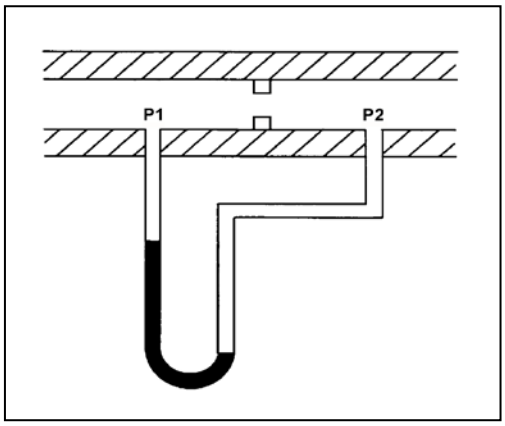

TOPIC: 293001
KNOWLEDGE: K1.03 [2.5/2.7]
QID: B1073 (P2873)

Refer to the drawing of two water storage tanks with four differential pressure (D/P) level detectors (see figure below).

The tanks are identical with equal water levels and 20 psia gas pressure above the water. The tanks are surrounded by standard atmospheric pressure. The temperature of the water in the tanks and reference legs is 70°F.

If each detector experiences a ruptured diaphragm, which detector(s) will produce a lower level indication? (Assume that actual tank and reference leg water levels do not change.)

A. No. 1 only

B. No. 2 only

C. No. 1, 2, and 3

D. No. 2, 3, and 4

ANSWER: D.

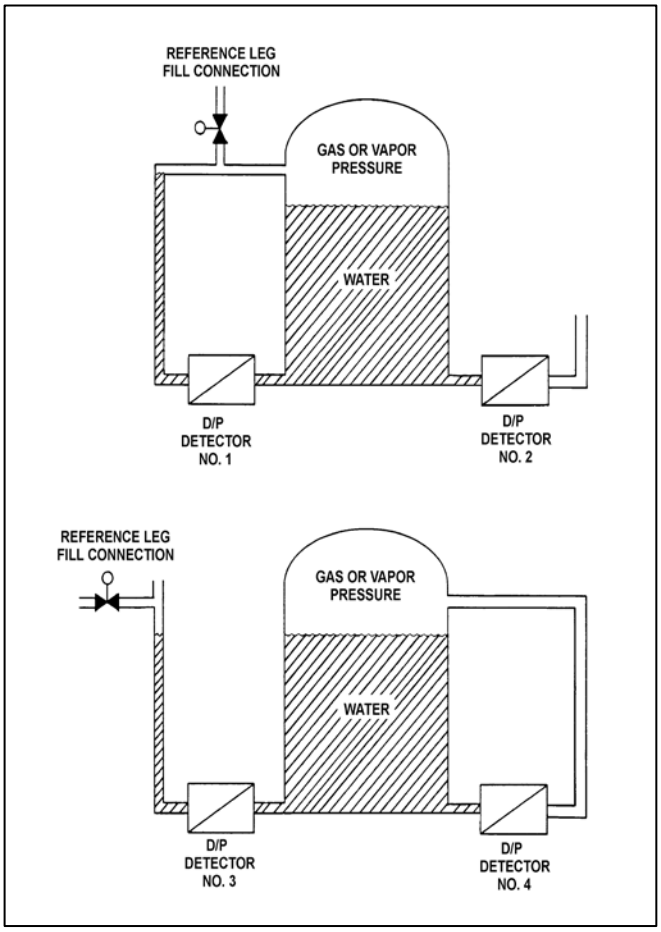

TOPIC: 293001
KNOWLEDGE: K1.03 [2.5/2.7]
QID: B1174 (P1673)

Refer to the drawing of two water storage tanks with four differential pressure (D/P) level detectors (see figure below).

The tanks are identical and are being maintained at 2 psig overpressure, the same constant water level, and a temperature of 60°F. They are surrounded by atmospheric pressure.

If a leak in the top of each tank causes a complete loss of overpressure, which detector(s) will produce a lower level indication?

A. No. 1 only

B. No. 2 only

C. No. 1 and 4

D. No. 2 and 3

ANSWER: D.

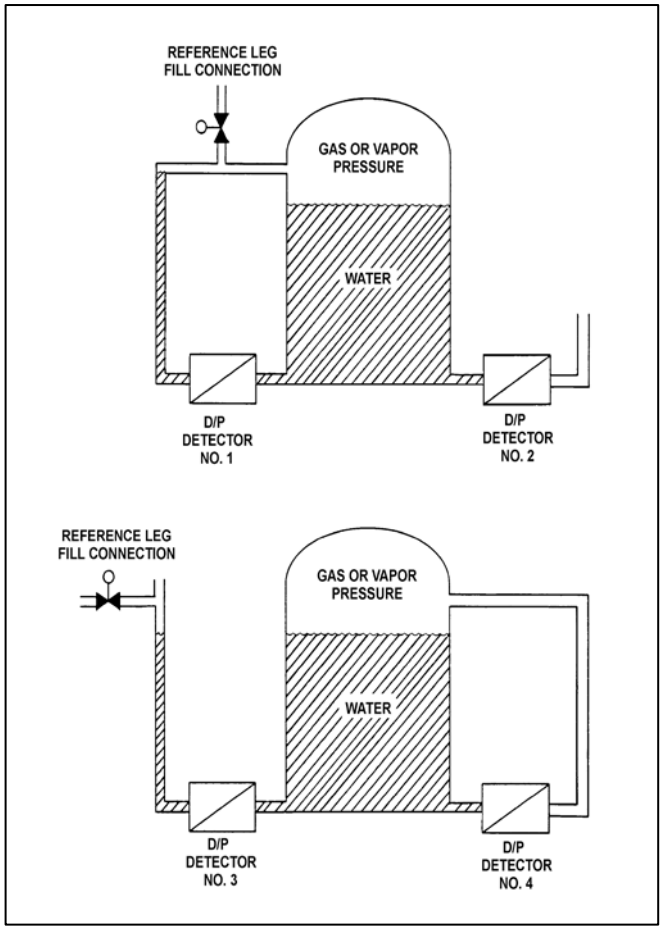

TOPIC: 293001
KNOWLEDGE: K1.03 [2.5/2.7]
QID: B1873 (P573)

An enclosed water storage tank is pressurized with nitrogen to prevent air inleakage. Tank pressure is allowed to vary as water level changes. A differential pressure detector is used to measure the tank level.

To achieve the most accurate level measurement, the low pressure side of the detector should sense which one of the following?

A. The pressure at the bottom of the tank.

B. The pressure of the atmosphere surrounding the tank.

C. The pressure of a column of water external to the tank.

D. The pressure of the gas space at the top of the tank.

ANSWER: D.

TOPIC: 293001
KNOWLEDGE: K1.03 [2.5/2.7]
QID: B2373 (P2373)

Refer to the drawing of two water storage tanks with four differential pressure (D/P) level detectors (see figure below).

The tanks are identical and are being maintained at 2 psig overpressure, 60°F, and the same constant water level. The tanks are located within a sealed containment structure that is being maintained at standard atmospheric pressure. All level detectors have been calibrated and are producing the same level indication.

If a ventilation malfunction causes the containment structure pressure to decrease to 12 psia, which detectors will produce the lowest level indications?

A. 1 and 3

B. 2 and 4

C. 1 and 4

D. 2 and 3

ANSWER: C.

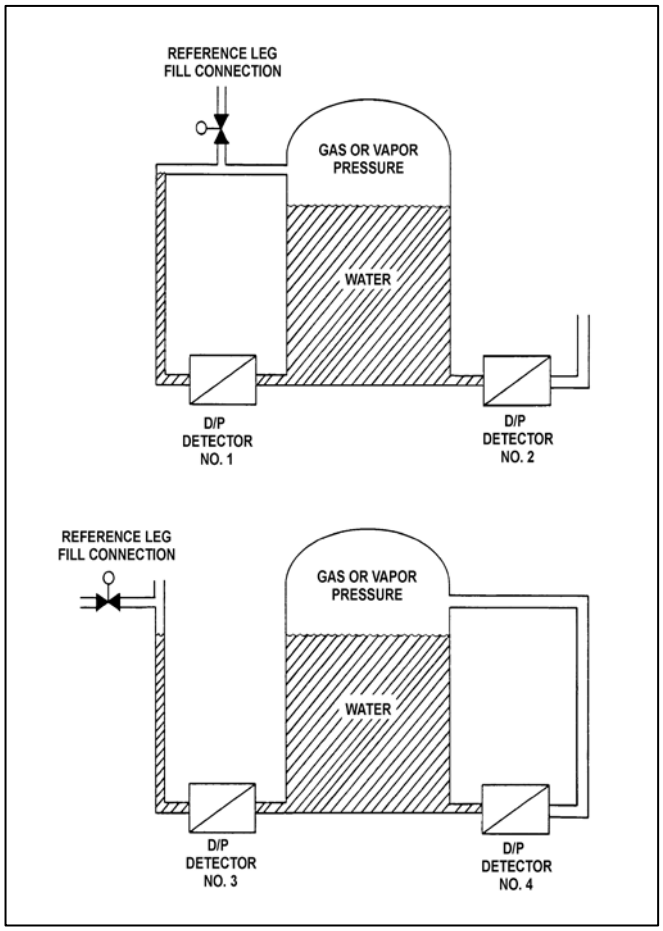

TOPIC: 293001
KNOWLEDGE: K1.03 [2.5/2.7]
QID: B2573 (P2574)

Refer to the drawing of two water storage tanks with four differential pressure (D/P) level detectors (see figure below).

The tanks are identical and are being maintained at 2 psig overpressure, 60°F, and the same constant water level. The tanks are located within a sealed containment structure that is being maintained at standard atmospheric pressure. All level detectors have been calibrated and are producing the same level indication.

If a ventilation malfunction causes the containment structure pressure to decrease to 13 psia, which detectors will produce the highest level indications?

A. 1 and 2

B. 3 and 4

C. 1 and 4

D. 2 and 3

ANSWER: D.

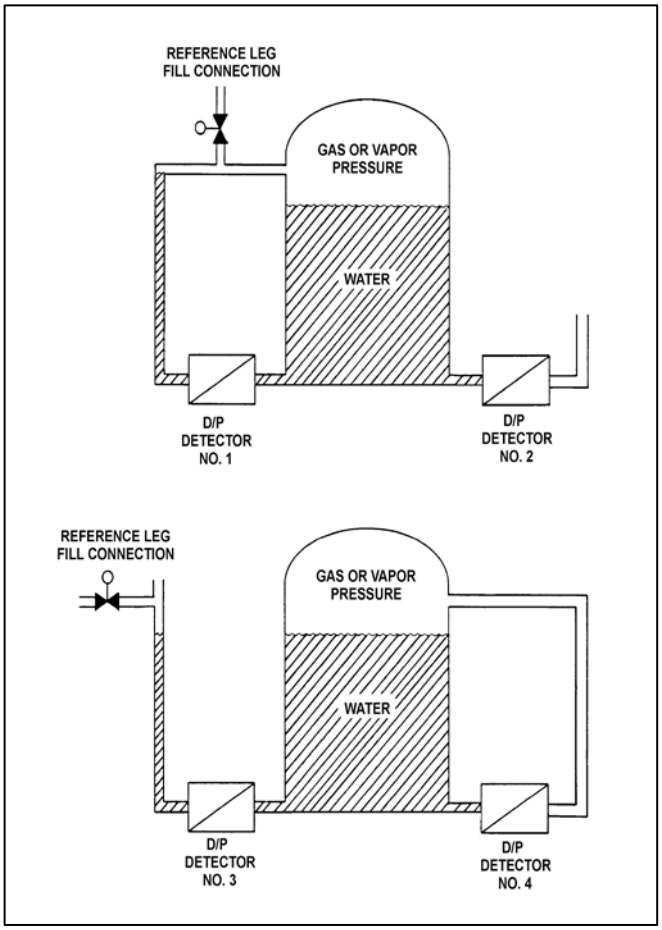

TOPIC: 293001
KNOWLEDGE: K1.03 [2.5/2.7]
QID: B2773

Refer to the drawing of two water storage tanks with four differential pressure (D/P) level detectors (see figure below).

The tanks are identical with equal water levels and 20 psia gas pressure above the water. The tanks are surrounded by standard atmospheric pressure. The temperature of the water in the tanks and reference legs is 70°F.

If each detector experiences a ruptured diaphragm, which detector(s) will produce a higher level indication? (Assume that actual tank and reference leg water levels do <u>not</u> change.)

A. No. 1 only

B. No. 2 only

C. No. 1 and 3

D. No. 2 and 4

ANSWER: A.

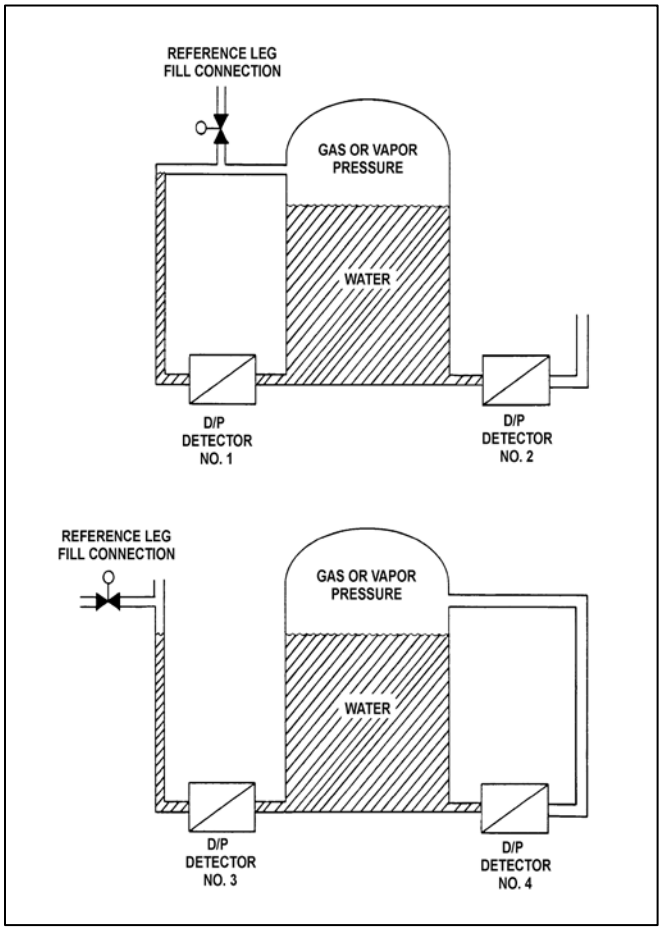

TOPIC: 293001
KNOWLEDGE: K1.03 [2.5/2.7]
QID: B3173 (P3173)

A water storage tank is vented to atmosphere. The tank is located at sea level and contains 100,000 gallons of 80°F water. A pressure gauge at the bottom of the tank reads 5.6 psig. What is the approximate water level in the tank?

A. 13 feet

B. 17 feet

C. 21 feet

D. 25 feet

ANSWER: A.

TOPIC: 293001
KNOWLEDGE: K1.03 [2.5/2.7]
QID: B3673 (P3673)

Refer to the drawing of a tank with a differential pressure (D/P) level detector (see figure below).

If the tank contains 30 feet of water at 60°F, what is the approximate D/P sensed by the detector?

A. 7 psid

B. 13 psid

C. 20 psid

D. 28 psid

ANSWER: B.

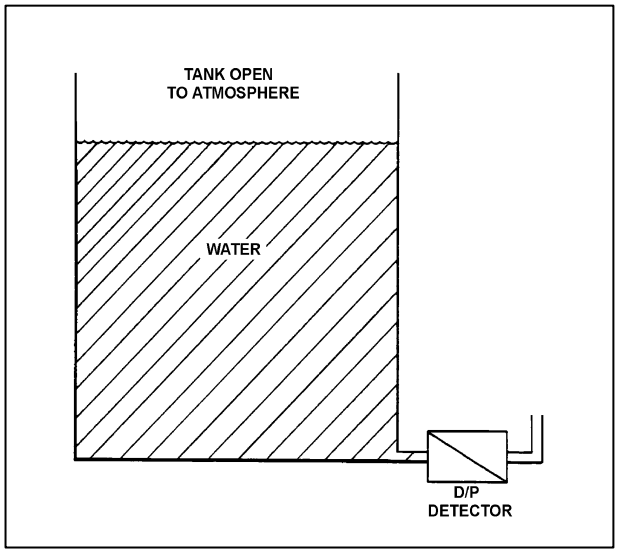

TOPIC: 293001
KNOWLEDGE: K1.03 [2.5/2.7]
QID: B3873 (P3873)

A water storage tank is vented to atmosphere. The tank is located at sea level and contains 100,000 gallons of water at 80°F. A pressure gauge at the bottom of the tank reads 7.3 psig. What is the approximate water level in the tank?

A. 13 feet

B. 17 feet

C. 21 feet

D. 25 feet

ANSWER: B.

TOPIC: 293001
KNOWLEDGE: K1.03 [2.5/2.7]
QID: B4537 (P4537)

A water storage tank is vented to atmosphere. The tank is located at sea level and contains 100,000 gallons of water at 80°F. A pressure gauge at the bottom of the tank reads 9.0 psig. What is the approximate water level in the tank?

A. 13 feet

B. 17 feet

C. 21 feet

D. 25 feet

ANSWER: C.

TOPIC: 293001
KNOWLEDGE: K1.03 [2.5/2.7]
QID: B4837 (P4837)

Refer to the drawing of two water storage tanks with four differential pressure (D/P) level detectors (see figure below).

The tanks are identical and are being maintained at 2 psig overpressure, the same constant water level, and a temperature of 60°F. The tanks are surrounded by atmospheric pressure. All level detectors have been calibrated and are producing the same level indication.

If a leak in the top of each tank causes a complete loss of overpressure in both tanks, which detector(s) will produce the highest level indication(s)?

A. No. 1 only

B. No. 2 only

C. No. 1 and 4

D. No. 2 and 3

ANSWER: C.

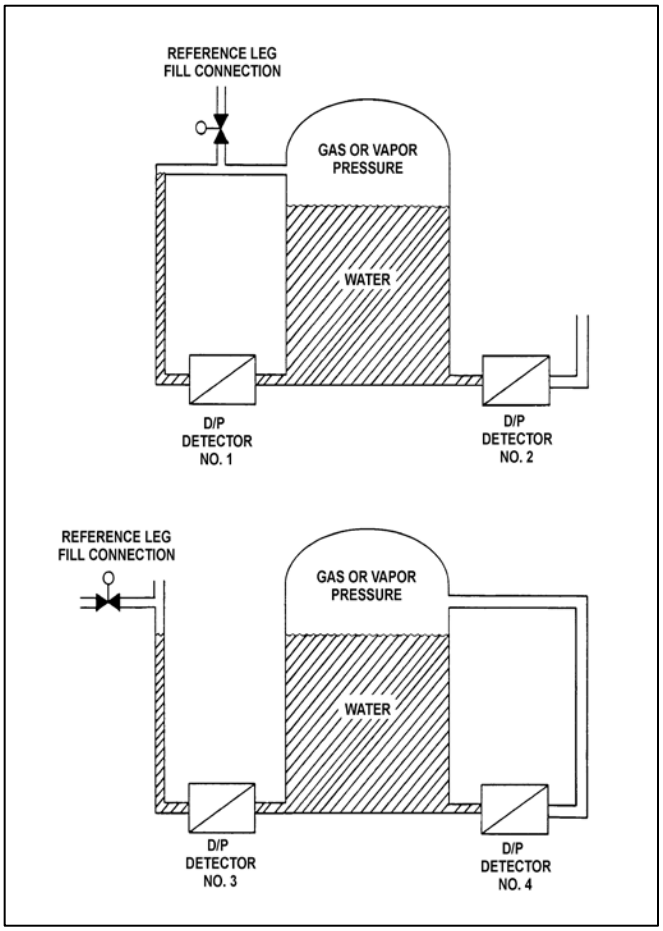

TOPIC: 293001
KNOWLEDGE: K1.03 [2.5/2.7]
QID: B5837 (P5837)

Refer to the drawing of an open water storage tank with a differential pressure (D/P) level indicator that is vented to atmosphere (see figure below). Both the tank and the level indicator are surrounded by standard atmospheric pressure. Tank water temperature is 70°F.

The D/P level indicator is sensing a differential pressure of 4.0 psi. What is the water level in the tank above the instrument penetration?

A. 9.2 feet

B. 16.7 feet

C. 24.7 feet

D. 43.2 feet

ANSWER: A.

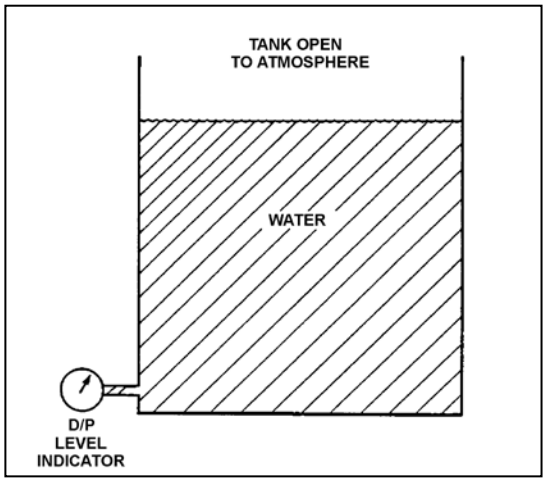

There are no test items available for topic 293002.

TOPIC: 293003
KNOWLEDGE: K1.07 [2.7/2.8]
QID: B474

A steam-water mixture is initially saturated with a quality of 50 percent when a small amount of heat is added. Assuming the pressure remains constant and the mixture remains saturated, the quality of the mixture will _____; and the temperature of the mixture will _____.

A. increase; increase

B. increase; remain the same

C. remain the same; increase

D. remain the same; remain the same

ANSWER: B.

TOPIC: 293003
KNOWLEDGE: K1.07 [2.7/2.8]
QID: B1074 (P674)

A liquid is saturated with 0 percent quality. Assuming pressure remains constant, the addition of a small amount of heat will...

A. raise the steady-state liquid temperature above the boiling point.

B. result in a subcooled liquid.

C. result in some of the liquid vaporizing.

D. result in a superheated liquid.

ANSWER: C.

TOPIC: 293003
KNOWLEDGE: K1.07 [2.7/2.8]
QID: B1874 (P1374)

A steam-water mixture is initially saturated with a quality of 95 percent when a small amount of heat is added to the mixture. If the mixture remains saturated and pressure remains constant, the temperature of the mixture will _____; and the quality of the mixture will _____.

A. increase; remain the same

B. increase; increase

C. remain the same; remain the same

D. remain the same; increase

ANSWER: D.

TOPIC: 293003
KNOWLEDGE: K1.07 [2.7/2.8]
QID: B1974 (P1474)

An open container holds 1.0 lbm of saturated water at standard atmospheric pressure. The addition of 1.0 Btu will…

A. raise the temperature of the water by 1°F.

B. vaporize a portion of the water.

C. increase the density of the water.

D. result in 1°F of superheat.

ANSWER: B.

TOPIC: 293003
KNOWLEDGE: K1.07 [2.7/2.8]
QID: B3374 (P2874)

An open container holds 1.0 lbm of saturated water at standard atmospheric pressure. The addition of 4.0 Btu will...

A. result in 4°F of superheat.

B. vaporize a portion of the water.

C. increase the density of the water.

D. raise the temperature of the water by 4°F.

ANSWER: B.

TOPIC: 293003
KNOWLEDGE: K1.07 [2.7/2.8]
QID: B3474

The temperature of a quantity of water is 212°F.

Which one of the following parameters, when paired with the temperature, provides <u>insufficient</u> information to determine whether the water is a saturated <u>liquid</u> rather than a saturated <u>liquid-vapor mixture</u>?

A. Enthalpy

B. Entropy

C. Pressure

D. Specific volume

ANSWER: C.

TOPIC: 293003
KNOWLEDGE: K1.07 [2.7/2.8]
QID: B3574 (P1974)

A steam-water mixture is initially saturated with a quality of 50 percent when a small amount of heat is added. If pressure remains constant and the mixture remains saturated, mixture steam quality will _____; and mixture temperature will _____.

A. increase; increase

B. increase; remain the same

C. remain the same; increase

D. remain the same; remain the same

ANSWER: B.

TOPIC: 293003
KNOWLEDGE: K1.09 [2.5/2.6]
QID: B146

Which one of the following contains a pair of water states for which an addition of heat will result in a temperature increase?

A. Saturated steam and subcooled water.

B. Wet steam and saturated steam.

C. Saturated water and saturated steam.

D. Subcooled water and wet steam.

ANSWER: A.

TOPIC: 293003
KNOWLEDGE: K1.09 [2.5/2.6]
QID: B875 (P874)

Consider a steam-water mixture with a quality of 99 percent. If pressure remains constant and heat is removed from the mixture, the temperature of the mixture will _____; and the quality of the mixture will _____. (Assume the mixture remains saturated.)

A. decrease; increase

B. decrease; decrease

C. remain the same; increase

D. remain the same; decrease

ANSWER: D.

TOPIC: 293003
KNOWLEDGE: K1.09 [2.5/2.6]
QID: B1274

Which one of the following will occur if 500 Btu is removed from 1.0 lbm of saturated steam at 800 psia? (Assume that pressure does <u>not</u> change.)

A. Temperature will decrease.

B. Density will decrease.

C. Specific volume will decrease.

D. Enthalpy will increase.

ANSWER: C.

TOPIC: 293003
KNOWLEDGE: K1.09 [2.5/2.6]
QID: B1474

Which one of the following will decrease if heat is added to a saturated vapor at a constant pressure?

A. Density

B. Temperature

C. Entropy

D. Enthalpy

ANSWER: A.

TOPIC: 293003
KNOWLEDGE: K1.09 [2.5/2.6]
QID: B1574 (P1574)

Consider a steam-water mixture with a quality of 79 percent. If pressure remains constant and heat is added to the mixture, the temperature of the mixture will _____; and the quality of the mixture will _____. (Assume the mixture remains saturated.)

A. remain the same; increase

B. remain the same; remain the same

C. increase; increase

D. increase; remain the same

ANSWER: A.

TOPIC: 293003
KNOWLEDGE: K1.09 [2.5/2.6]
QID: B2074 (P2074)

Consider a saturated steam-water mixture at 500°F with a quality of 90 percent. If the pressure of the mixture is decreased with no heat gain or loss, the temperature of the mixture will _____; and the quality of the mixture will _____. (Assume the mixture remains saturated.)

A. decrease; decrease

B. decrease; increase

C. remain the same; decrease

D. remain the same; increase

ANSWER: B.

TOPIC: 293003
KNOWLEDGE: K1.09 [2.5/2.6]
QID: B2174

Consider saturated steam at 470°F. If the pressure of the steam remains constant while heat is added, steam temperature will _____; and steam quality will _____.

A. remain the same; remain the same

B. remain the same; increase

C. increase; remain the same

D. increase; increase

ANSWER: C.

TOPIC: 293003
KNOWLEDGE: K1.09 [2.5/2.6]
QID: B2975 (P2974)

Consider a sealed vessel containing 1,000 lbm of a saturated steam-water mixture at 500°F. The vessel is perfectly insulated with no heat gain or loss occurring.

If a leak near the bottom of the vessel results in a loss of 10 percent of the liquid volume from the vessel, the temperature of the mixture will _____; and the overall quality of the mixture will _____. (Assume the mixture remains saturated.)

A. decrease; increase

B. decrease; decrease

C. remain the same; increase

D. remain the same; decrease

ANSWER: A.

TOPIC: 293003
KNOWLEDGE: K1.12 [2.5/2.6]
QID: B141

What is the approximate quality of wet steam leaving a reactor at 530 psig with an enthalpy of 928.9 Btu/lbm?

A. 25 percent

B. 37 percent

C. 63 percent

D. 75 percent

ANSWER: C.

TOPIC: 293003
KNOWLEDGE: K1.12 [2.5/2.6]
QID: B2375 (P2374)

Which one of the following describes the effect of removing heat from a saturated steam-water mixture that remains in a saturated condition?

A. Temperature will increase.

B. Temperature will decrease.

C. Quality will increase.

D. Quality will decrease.

ANSWER: D.

TOPIC: 293003
KNOWLEDGE: K1.12 [2.5/2.6]
QID: B2874 (P1976)

Which one of the following is the approximate quality of a steam-water mixture at 467°F with an enthalpy of 1,000 Btu/lbm?

A. 24 percent

B. 27 percent

C. 73 percent

D. 76 percent

ANSWER: C.

TOPIC: 293003
KNOWLEDGE: K1.12 [2.5/2.6]
QID: B3075 (P3074)

The temperature of a saturated steam-water mixture is 467°F.

Which one of the following parameter values, when paired with the temperature, provides insufficient information to determine the quality of the mixture?

A. Pressure is 499.96 psia

B. Enthalpy is 977.33 Btu/lbm

C. Entropy is 1.17 Btu/lbm -°R

D. Specific volume is 0.817 ft^3/lbm

ANSWER: A.

TOPIC: 293003
KNOWLEDGE: K1.16 [2.8/2.8]
QID: B74

Given a reactor operating at 985 psig with a feedwater inlet temperature of 400°F, what is the amount of feedwater subcooling?

A. 136.6°F

B. 140.6°F

C. 144.6°F

D. 148.6°F

ANSWER: C.

TOPIC: 293003
KNOWLEDGE: K1.16 [2.8/2.8]
QID: B775

What effect will occur if heat is removed from water that is in a subcooled condition?

A. Temperature of the water will increase.

B. Enthalpy of the water will decrease.

C. Quality of the water will increase.

D. Density of the water will decrease.

ANSWER: B.

TOPIC: 293003
KNOWLEDGE: K1.16 [2.8/2.8]
QID: B2973 (P2975)

An open vessel contains 1.0 lbm of water at 206°F and standard atmospheric pressure. Which one of the following will be caused by the addition of 3.0 Btu to the water?

A. The water temperature will rise by approximately 3°F.

B. Approximately 3 percent of the water mass will vaporize.

C. The water density will decrease by approximately 3 percent.

D. The water will become superheated by approximately 3°F.

ANSWER: A.

TOPIC: 293003
KNOWLEDGE: K1.22 [2.9/3.2]
QID: B1175 (P1675)

Which one of the following is the approximate temperature of a saturated steam-water mixture that has an enthalpy of 1,150 Btu/lbm and a quality of 95 percent?

A. 220°F

B. 270°F

C. 360°F

D. 440°F

ANSWER: C.

TOPIC: 293003
KNOWLEDGE: K1.22 [2.9/3.2]
QID: B1377

Saturated steam undergoes an ideal expansion process in an ideal turbine from 1,000 psia to 28 inches Hg vacuum. Approximately how much specific work is being performed by the turbine?

A. 1,193 Btu/lbm

B. 775 Btu/lbm

C. 418 Btu/lbm

D. 357 Btu/lbm

ANSWER: C.

TOPIC: 293003
KNOWLEDGE: K1.22 [2.9/3.2]
QID: B1577

Saturated steam undergoes an ideal expansion process in an ideal turbine from 294 psig to 27 inches Hg vacuum. Approximately how much specific work is being performed by the turbine?

A. 1,203 Btu/lbm

B. 418 Btu/lbm

C. 343 Btu/lbm

D. 308 Btu/lbm

ANSWER: C.

TOPIC: 293003
KNOWLEDGE: K1.22 [2.9/3.2]
QID: B1675

Which one of the following is the approximate reactor coolant heatup rate if reactor vessel pressure increases from 470 psig to 980 psig over a two hour period?

A. 40°F/hr

B. 60°F/hr

C. 80°F/hr

D. 120°F/hr

ANSWER: A.

TOPIC: 293003
KNOWLEDGE: K1.22 [2.9/3.2]
QID: B6038 (P6039)

Given a set of steam tables that lists the following parameters for saturated steam and water:

- Pressure
- Enthalpy
- Specific volume
- Entropy
- Temperature

One can determine the _____ of a saturated steam-water mixture given only the _____.

A. temperature; enthalpy

B. temperature; pressure

C. pressure; entropy

D. pressure; specific volume

ANSWER: B.

TOPIC: 293003
KNOWLEDGE: K1.23 [2.8/3.1]
QID: B75

The saturation pressure corresponding to 400°F is approximately...

A. 232 psia.

B. 247 psia.

C. 262 psia.

D. 444 psia.

ANSWER: B.

TOPIC: 293003
KNOWLEDGE: K1.23 [2.8/3.1]
QID: B103

An operator suspects that a steam line temperature instrument reading is not correct. A recently calibrated pressure gauge sensing steam pressure for the same steam line indicates 351 psig.

Assuming the system is operating at saturation pressure, what approximate temperature should the temperature instrument indicate?

A. 424°F

B. 428°F

C. 432°F

D. 436°F

ANSWER: D.

TOPIC: 293003
KNOWLEDGE: K1.23 [2.8/3.1]
QID: B139

The saturation temperature for steam at a pressure of 785 psig is approximately...

A. 510°F.

B. 513°F.

C. 515°F.

D. 518°F.

ANSWER: D.

TOPIC: 293003
KNOWLEDGE: K1.23 [2.8/3.1]
QID: B190

Which one of the following is the approximate quality of steam leaving a cyclone separator at 985 psig and 1,186 Btu/lbm?

A. 95 percent

B. 96 percent

C. 97 percent

D. 99 percent

ANSWER: D.

TOPIC: 293003
KNOWLEDGE: K1.23 [2.8/3.1]
QID: B275 (P275)

The saturation pressure for water at 328°F is approximately...

A. 85 psig.

B. 100 psig.

C. 115 psig.

D. 130 psig.

ANSWER: A.

TOPIC: 293003
KNOWLEDGE: K1.23 [2.8/3.1]
QID: B375

Saturated steam at 250 psia enters turbine X. Superheated steam at 250 psia and 500°F enters turbine Y. Both turbines are 100 percent efficient and exhaust to a condenser at 1 psia.

Which one of the following lists the approximate percentages of moisture at the exhausts of turbines X and Y?

A. Turbine X = 24.5%; turbine Y = 20.8%

B. Turbine X = 26.3%; turbine Y = 13.0%

C. Turbine X = 24.5%; turbine Y = 13.0%

D. Turbine X = 26.3%; turbine Y = 20.8%

ANSWER: A.

TOPIC: 293003
KNOWLEDGE: K1.23 [2.8/3.1]
QID: B382

Cooling water exits a fuel channel with an enthalpy of 1,195 Btu/lbm at a reactor pressure of 1,050 psig. What is the state of the fluid at the exit of the fuel channel?

A. Saturated

B. Superheated

C. Compressed

D. Subcooled

ANSWER: B.

TOPIC: 293003
KNOWLEDGE: K1.23 [2.8/3.1]
QID: B974

Which one of the following sets of parameters for a saturated steam-water mixture will result in the highest quality?

A. 500°F; 1,100 Btu/lbm

B. 320°F; 1,070 Btu/lbm

C. 200°F; 1,040 Btu/lbm

D. 160°F; 960 Btu/lbm

ANSWER: C.

TOPIC: 293003
KNOWLEDGE: K1.23 [2.8/3.1]
QID: B975

Which one of the following is the enthalpy of steam at 235.3 psig and 500°F?

A. 1,201.1 Btu/lbm

B. 1,202.2 Btu/lbm

C. 1,263.5 Btu/lbm

D. 1,286.6 Btu/lbm

ANSWER: C.

TOPIC: 293003
KNOWLEDGE: K1.23 [2.8/3.1]
QID: B1375

A steam-water mixture leaving a reactor core has the following parameter values:

Temperature = 550.5°F
Pressure = 1,035 psig
Quality = 14.5 percent

Which one of the following is the approximate enthalpy of the steam-water mixture?

A. 610 Btu/lbm

B. 643 Btu/lbm

C. 720 Btu/lbm

D. 860 Btu/lbm

ANSWER: B.

TOPIC: 293003
KNOWLEDGE: K1.23 [2.8/3.1]
QID: B1575

A steam-water mixture leaving the reactor core has the following parameter values:

Temperature = 550.5°F
Pressure = 1,035 psig
Quality = 20 percent

Which one of the following is the approximate enthalpy of the steam-water mixture?

A. 641 Btu/lbm

B. 678 Btu/lbm

C. 751 Btu/lbm

D. 1,063 Btu/lbm

ANSWER: B.

TOPIC: 293003
KNOWLEDGE: K1.23 [2.8/3.1]
QID: B1776 (P1775)

What is the approximate amount of heat required to convert 3.0 lbm of water at 100°F and 100 psia to saturated steam at 100 psia?

A. 889 Btu

B. 1,119 Btu

C. 2,666 Btu

D. 3,358 Btu

ANSWER: D.

TOPIC: 293003
KNOWLEDGE: K1.23 [2.8/3.1]
QID: B2075 (P2077)

A nuclear power plant is operating with the following main steam parameters at the main turbine steam inlet valves:

Pressure = 900 psia
Quality = 98 percent

The main turbine steam chest pressure is 400 psia. Assuming an ideal throttling process, what is the quality of the steam in the steam chest?

A. 97 percent

B. 98 percent

C. 99 percent

D. 100 percent

ANSWER: A.

TOPIC: 293003
KNOWLEDGE: K1.23 [2.8/3.1]
QID: B2275 (P2275)

A saturated steam-water mixture with a quality of 30 percent leaves a main turbine at 1.0 x 10^6 lbm/hr and enters a steam condenser at 2.0 psia. Condensate enters the hotwell at 118°F.

Which one of the following is the approximate condenser heat transfer rate?

A. 3.1 x 10^8 Btu/hr

B. 5.8 x 10^8 Btu/hr

C. 7.2 x 10^8 Btu/hr

D. 9.9 x 10^8 Btu/hr

ANSWER: A.

TOPIC: 293003
KNOWLEDGE: K1.23 [2.8/3.1]
QID: B2374 (P2375)

Which one of the following is the approximate amount of heat required to convert 2.0 lbm of water at 100°F and 100 psia to saturated steam at 100 psia?

A. 1,119 Btu

B. 1,187 Btu

C. 2,238 Btu

D. 2,374 Btu

ANSWER: C.

TOPIC: 293003
KNOWLEDGE: K1.23 [2.8/3.1]
QID: B2474

Turbine X is an ideal steam turbine that exhausts to a condenser at 1.0 psia. Turbine X is driven by saturated steam at 500 psia. Which one of the following lists the approximate specific work output of turbine X and the moisture content of the steam exiting turbine X?

	Specific Work	Moisture Content
A.	388 Btu/lbm	72%
B.	388 Btu/lbm	28%
C.	817 Btu/lbm	72%
D.	817 Btu/lbm	28%

ANSWER: B.

TOPIC: 293003
KNOWLEDGE: K1.23 [2.8/3.1]
QID: B2475 (P2475)

A steam line is carrying steam at 500 psia and 507°F. Approximately how much specific ambient heat loss is required before moisture formation can occur in the steam line?

A. 31 Btu/lbm

B. 45 Btu/lbm

C. 58 Btu/lbm

D. 71 Btu/lbm

ANSWER: A

TOPIC: 293003
KNOWLEDGE: K1.23 [2.8/3.1]
QID: B2575 (P2575)

Which one of the following is the approximate amount of heat required to convert 2.0 lbm of water at 100°F and 100 psia to superheated steam at 400°F and 100 psia?

A. 1,119 Btu

B. 1,159 Btu

C. 2,239 Btu

D. 2,319 Btu

ANSWER: D.

TOPIC: 293003
KNOWLEDGE: K1.23 [2.8/3.1]
QID: B2675 (P2675)

What is the approximate specific heat (Btu/lbm-°F) of water at 300°F and 100 psia?

A. 1.03 Btu/lbm-°F

B. 1.11 Btu/lbm-°F

C. 1.17 Btu/lbm-°F

D. 1.25 Btu/lbm-°F

ANSWER: A.

TOPIC: 293003
KNOWLEDGE: K1.23 [2.8/3.1]
QID: B2774 (P2778)

The theoretical maximum efficiency of a steam cycle is given by the equation:

$$Eff_{max} = (1 - T_{out}/T_{in}) \times 100\%$$

where T_{out} is the absolute temperature for heat rejection and T_{in} is the absolute temperature for heat addition. (Fahrenheit temperature is converted to absolute temperature by adding 460°F.)

A nuclear power plant is operating with a stable reactor vessel pressure of 900 psia. What is the approximate theoretical maximum steam cycle efficiency this plant can achieve by establishing its main condenser vacuum at 1.0 psia?

A. 35 percent

B. 43 percent

C. 65 percent

D. 81 percent

ANSWER: B.

TOPIC: 293003
KNOWLEDGE: K1.23 [2.8/3.1]
QID: B2776 (P2775)

With a nuclear power plant operating near rated power, air inleakage into the main condenser causes main condenser pressure to increase from 1.0 psia to 2.0 psia.

Given the following:

- Initial main condenser condensate depression was 4°F.
- After the plant stabilizes, main condenser condensate depression is 2°F with main condenser pressure at 2.0 psia.

Which one of the following is the approximate increase in main condenser specific heat rejection needed to restore condensate depression to 4°F?

A. 2 Btu/lbm

B. 4 Btu/lbm

C. 8 Btu/lbm

D. 16 Btu/lbm

ANSWER: A.

TOPIC: 293003
KNOWLEDGE: K1.23 [2.8/3.1]
QID: B2875

A nuclear power plant is operating at a low power level. Main steam at the main turbine steam inlet valves has the following properties:

Pressure = 900 psia
Quality = 99 percent

The main turbine steam chest pressure is 300 psia. Which one of the following is the approximate temperature of the steam in the steam chest?

A. 417°F

B. 439°F

C. 496°F

D. 532°F

ANSWER: A.

TOPIC: 293003
KNOWLEDGE: K1.23 [2.8/3.1]
QID: B3074 (P3077)

A nuclear power plant is operating at 100 percent power. Steam is escaping to atmosphere through a flange leak in a steam supply line to the low pressure section of the main turbine.

Given:

- Steam line pressure is 300 psia.
- Steam line temperature is 440°F.

What is the approximate temperature of the steam as it reaches standard atmospheric pressure?

A. 212°F

B. 268°F

C. 322°F

D. 358°F

ANSWER: D.

TOPIC: 293003
KNOWLEDGE: K1.23 [2.8/3.1]
QID: B3175 (P3175)

A steam line is carrying saturated steam at 500 psia. Approximately how much heat addition to the steam is necessary to achieve 60°F of superheat?

A. 31 Btu/lbm

B. 45 Btu/lbm

C. 58 Btu/lbm

D. 71 Btu/lbm

ANSWER: B.

TOPIC: 293003
KNOWLEDGE: K1.23 [2.8/3.1]
QID: B3274 (P3275)

An ideal main turbine generator (MTG) is producing 1,000 MW of electrical power while being supplied with 100 percent quality steam at 920 psig. Steam supply pressure is then gradually increased to 980 psig at the same quality. Assume turbine control valve position and condenser vacuum remain the same.

Which one of the following describes why the MTG output increases as steam pressure increases?

A. Each lbm of steam entering the turbine has a higher specific heat.

B. Each lbm of steam entering the turbine has a higher specific enthalpy.

C. Each lbm of steam passing through the turbine expands to fill a greater volume.

D. Each lbm of steam passing through the turbine performs increased work in the turbine.

ANSWER: D.

TOPIC: 293003
KNOWLEDGE: K1.23 [2.8/3.1]
QID: B3275

A nuclear power plant is shutdown at normal operating temperatures and pressures. Reactor coolant temperature is being controlled by dumping main steam (100 percent quality) to the main condenser.

Given the following:

- Main steam pressure is 1,000 psia.
- Main condenser vacuum is 28"Hg.

Which one of the following is the approximate temperature of the steam as it enters the main condenser?

A. 102°F

B. 212°F

C. 295°F

D. 358°F

ANSWER: C.

TOPIC: 293003
KNOWLEDGE: K1.23 [2.8/3.1]
QID: B3475 (P3475)

Which one of the following is the approximate amount of heat required to convert 2.0 lbm of water at 100°F and 100 psia to saturated steam at 100 psia?

A. 560 Btu

B. 1,120 Btu

C. 2,238 Btu

D. 3,356 Btu

ANSWER: C.

TOPIC: 293003
KNOWLEDGE: K1.23 [2.8/3.1]
QID: B3575 (P3577)

Saturated steam at 1,000 psia is being supplied to the inlet of a partially open steam throttle valve on a main turbine. Pressure in the steam chest downstream of the throttle valve is 150 psia. Assume a typical throttling process with no heat gain or loss to/from the steam.

When compared to the conditions at the inlet to the throttle valve, which one of the following describes the conditions in the steam chest for specific enthalpy and specific entropy?

	Steam Chest Specific Enthalpy	Steam Chest Specific Entropy
A.	About the same	About the same
B.	About the same	Significantly higher
C.	Significantly lower	About the same
D.	Significantly lower	Significantly higher

ANSWER: B.

TOPIC: 293003
KNOWLEDGE: K1.23 [2.8/3.1]
QID: B3675 (P3677)

A nuclear power plant is shutdown and steam is escaping to atmosphere through a leak in a main steam line. If main steam line pressure is 300 psia, what is the approximate temperature of the steam as it reaches standard atmospheric pressure? (Assume the steam in the main steam line has a quality of 100 percent.)

A. 212°F

B. 268°F

C. 322°F

D. 358°F

ANSWER: C.

TOPIC: 293003
KNOWLEDGE: K1.23 [2.8/3.1]
QID: B3774 (P3775)

A 100 ft^3 vessel contains a saturated steam-water mixture at 1,000 psia. The water portion occupies 30 ft^3 and the steam portion occupies the remaining 70 ft^3. What is the approximate total mass of the mixture in the vessel?

A. 1,547 lbm

B. 2,612 lbm

C. 3,310 lbm

D. 4,245 lbm

ANSWER: A.

TOPIC: 293003
KNOWLEDGE: K1.23 [2.8/3.1]
QID: B3938 (P3939)

Main steam is being used to reheat high pressure (HP) turbine exhaust in a moisture separator-reheater (MSR).

Given:

- The HP turbine exhaust enters the MSR reheater section as saturated steam (100 percent quality).
- The exhaust enters and exits the reheater section at 280 psia and a flow rate of 1.0E6 lbm/hr.
- The main steam heat transfer rate in the reheater section is 42.1E6 Btu/hr.

Which one of the following is the approximate temperature of the HP turbine exhaust leaving the reheater section of the MSR?

A. 450°F

B. 475°F

C. 500°F

D. 525°F

ANSWER: B.

TOPIC: 293003
KNOWLEDGE: K1.23 [2.8/3.1]
QID: B4038

A 100 ft^3 vessel contains a saturated steam-water mixture at 1,000 psia. The water portion occupies 70 ft^3 and the steam portion occupies the remaining 30 ft^3. What is the approximate total mass of the mixture in the vessel?

A. 1,547 lbm

B. 2,612 lbm

C. 3,310 lbm

D. 4,245 lbm

ANSWER: C.

TOPIC: 293003
KNOWLEDGE: K1.23 [2.8/3.1]
QID: B4138 (P4139)

A saturated steam-water mixture at 50 percent quality is leaving a main turbine at 1.0×10^6 lbm/hr and entering a condenser at 1.6 psia. Condensate enters the hotwell at 112°F.

Which one of the following is the approximate condenser heat transfer rate?

A. 3.1×10^8 Btu/hr

B. 3.8×10^8 Btu/hr

C. 4.5×10^8 Btu/hr

D. 5.2×10^8 Btu/hr

ANSWER: D.

TOPIC: 293003
KNOWLEDGE: K1.23 [2.8/3.1]
QID: B4338 (P4339)

A nuclear power plant is operating at 100 percent power. The main turbine has one high pressure (HP) unit and one low pressure (LP) unit.

Main steam enters the HP unit of the main turbine with the following parameters:

Pressure = 1,000 psia
Quality = 100 percent

The exhaust steam exits the HP unit at 200 psia, then goes through a moisture separator-reheater, and enters the LP units with the following parameters:

Pressure = 200 psia
Temperature = 500°F

The main condenser pressure is 1.0 psia. Assume that each unit of the main turbine is 100 percent efficient.

The higher enthalpy steam is being supplied to the _____ unit of the main turbine; and the greater moisture content is found in the exhaust of the _____ unit.

A. LP; LP

B. LP; HP

C. HP; LP

D. HP; HP

ANSWER: A.

TOPIC: 293003
KNOWLEDGE: K1.23 [2.8/3.1]
QID: B4738 (P4739)

Consider a 100 lbm quantity of a saturated steam-water mixture at standard atmospheric pressure. The mixture has a quality of 70 percent. Assume that pressure remains constant and there is no heat loss from the mixture.

Which one of the following is the approximate heat addition needed to increase the quality of the mixture to 100 percent?

A. 5,400 Btu

B. 12,600 Btu

C. 29,100 Btu

D. 67,900 Btu

ANSWER: C.

TOPIC: 293003
KNOWLEDGE: K1.23 [2.8/3.1]
QID: B4838 (P4839)

An open vessel contains 1.0 lbm-mass of water at 204°F and standard atmospheric pressure. If 16.0 Btu of heat is added to the water, the water temperature will rise by about _____; and approximately _____ of the water mass will become steam.

A. 8°F; 1 percent

B. 8°F; 10 percent

C. 16°F; 1 percent

D. 16°F; 10 percent

ANSWER: A.

TOPIC: 293003
KNOWLEDGE: K1.23 [2.8/3.1]
QID: B4938 (P4939)

Water enters an ideal convergent-divergent nozzle with the following parameters:

Pressure = 300 psia
Temperature = 102°F
Velocity = 50 ft/sec

The velocity of the water at the throat of the nozzle is 200 ft/sec.

Given that nozzles convert enthalpy to kinetic energy, and assuming no heat transfer to or from the nozzle, what is the approximate pressure of the water at the throat of the nozzle?

A. 296 psia

B. 150 psia

C. 75 psia

D. 50 psia

ANSWER: D.

TOPIC: 293003
KNOWLEDGE: K1.23 [2.8/3.1]
QID: B5038 (P5039)

An open vessel contains 1.0 lbm of water at 206°F and standard atmospheric pressure. Which one of the following will be caused by the addition of 12.0 Btu to the water?

A. The water temperature will rise by about 6°F and none of the water will vaporize.

B. The water temperature will rise by about 6°F and some of the water will vaporize.

C. The water temperature will rise by about 12°F and none of the water will vaporize.

D. The water temperature will rise by about 12°F and some of the water will vaporize.

ANSWER: B.

TOPIC: 293003
KNOWLEDGE: K1.23 [2.8/3.1]
QID: B5138 (P5139)

A feedwater pump discharges into a 16-inch diameter discharge line. Given the following:

Pump discharge pressure = 950 psia
Feedwater temperature = 300°F
Feedwater velocity = 15.2 ft/sec

What is the feedwater pump discharge mass flow rate?

A. 1.1×10^6 lbm/hr

B. 4.4×10^6 lbm/hr

C. 1.8×10^7 lbm/hr

D. 5.3×10^7 lbm/hr

ANSWER: B.

TOPIC: 293003
KNOWLEDGE: K1.23 [2.8/3.1]
QID: B5238 (P5239)

Saturated steam enters a frictionless convergent-divergent nozzle with the following parameters:

Pressure = 850 psia
Velocity = 10 ft/sec

The steam at the throat of the nozzle has a subsonic velocity of 950 ft/sec.

Given that nozzles convert enthalpy to kinetic energy, and assuming no heat transfer to or from the nozzle, what is the enthalpy of the steam at the throat of the nozzle?

A. 1,162 Btu/lbm

B. 1,171 Btu/lbm

C. 1,180 Btu/lbm

D. 1,189 Btu/lbm

ANSWER: C.

TOPIC: 293003
KNOWLEDGE: K1.23 [2.8/3.1]
QID: B5338 (P5340)

A nuclear power plant is operating with the following main steam parameters at the main turbine steam inlet valves:

Pressure = 900 psia
Quality = 99 percent

The main turbine steam chest pressure is 300 psia. Assuming an ideal throttling process, what is the quality of the steam in the steam chest?

A. 100 percent

B. 98 percent

C. 88 percent

D. 87 percent

ANSWER: B.

TOPIC: 293003
KNOWLEDGE: K1.23
QID: B5438 (P5439)

An ideal auxiliary steam turbine exhausts to the atmosphere. The steam turbine is supplied with saturated steam at 900 psia. Which one of the following is the maximum specific work (Btu/lbm) that can be extracted from the steam by the steam turbine?

A. 283 Btu/lbm

B. 670 Btu/lbm

C. 913 Btu/lbm

D. 1,196 Btu/lbm

ANSWER: A.

TOPIC: 293003
KNOWLEDGE: K1.23 [2.8/3.1]
QID: B5638

A main steam line safety valve is leaking by, allowing 100 percent quality steam from the reactor vessel to enter the discharge pipe, which remains at a constant pressure of 10 psig. Initial safety valve discharge pipe temperature is elevated but stable. Assume no heat loss from the safety valve discharge pipe.

When the leak is noted, the reactor is shut down and a plant cooldown and depressurization are commenced. As the main steam pressure slowly decreases from 1,000 psig to 800 psig, the safety valve discharge pipe temperature will...

A. decrease, because the entropy of the safety valve discharge will be decreasing.

B. decrease, because the enthalpy of the safety valve discharge will be decreasing.

C. increase, because the safety valve discharge will become more superheated as reactor vessel pressure decreases.

D. remain the same, because the safety valve discharge will remain a saturated steam-water mixture at 10 psig.

ANSWER: C.

TOPIC: 293003
KNOWLEDGE: K1.23 [2.8/3.1]
QID: B5738 (P5739)

A steam turbine exhausts to a steam condenser at 1.0 psia. The steam turbine is supplied with saturated steam at 900 psia at a flow rate of 200,000 lbm/hr. What is the approximate rate of condensate addition to the condenser hotwell in gallons per minute?

A. 400 gpm

B. 2,400 gpm

C. 4,000 gpm

D. 24,000 gpm

ANSWER: A.

TOPIC: 293003
KNOWLEDGE: K1.23 [2.8/3.1]
QID: B5938 (P5939)

What happens to the enthalpy of the saturated steam in a reactor vessel (RV) during a reactor heatup as RV pressure increases from 100 psia to 1,000 psia?

A. The enthalpy increases during the entire pressure increase.

B. The enthalpy initially increases and then decreases.

C. The enthalpy decreases during the entire pressure increase.

D. The enthalpy initially decreases and then increases.

ANSWER: B.

TOPIC: 293003
KNOWLEDGE: K1.23 [2.8/3.1]
QID: B6338 (P6339)

Saturated steam is flowing to a reheater. The reheater inlet and outlet pressures are both 260 psia. If the reheater adds 60.5 Btu/lbm to the steam, what is the temperature of the steam exiting the reheater?

A. 405°F

B. 450°F

C. 465°F

D. 500°F

ANSWER: D.

TOPIC: 293003
KNOWLEDGE: K1.23 [2.8/3.1]
QID: B6438 (P6439)

An open vessel contains 5.0 lbm of water at constant standard atmospheric pressure. The water has been heated to the saturation temperature. If an additional 1,600 Btu is added to the water, the water temperature will _____, and _____ than 50 percent of the water will vaporize.

A. increase significantly; less

B. increase significantly; more

C. remain about the same; less

D. remain about the same; more

ANSWER: C.

TOPIC: 293003
KNOWLEDGE: K1.23 [2.8/3.1]
QID: B6538 (P6540)

A nuclear power plant is operating at power. Steam is escaping to atmosphere through a flange leak in a steam line supplying the low pressure section of the main turbine.

Given:

- Steam line pressure is 200 psia.
- Steam line temperature is 400°F.

Assuming no heat transfer to/from the steam, what is the approximate temperature of the steam as it reaches atmospheric pressure?

A. 212°F

B. 284°F

C. 339°F

D. 375°F

ANSWER: C.

TOPIC: 293003
KNOWLEDGE: K1.23 [2.8/3.1]
QID: B6638 (P6639)

Saturated steam at 240 psia enters an ideal low pressure (LP) turbine and exhausts to a steam condenser at 1.0 psia. Compared to the LP turbine entry conditions, the volumetric flow rate of the steam leaving the LP turbine will be about _____ times larger.

A. 103

B. 132

C. 174

D. 240

ANSWER: B.

TOPIC: 293003
KNOWLEDGE: K1.23 [2.8/3.1]
QID: B6938 (P6939)

A nuclear power plant experienced a loss of all AC electrical power due to a natural disaster. A few days later, there is turbulent boiling in the spent fuel pool. Average spent fuel temperature is elevated but stable. Assume that boiling is the only means of heat removal from the spent fuel pool.

Given the following stable current conditions:

Spent fuel decay heat rate = 4.8 MW
Spent fuel building pressure = 14.7 psia
Spent fuel pool temperature = 212°F

At what approximate rate is the mass of water in the spent fuel pool decreasing?

A. 4,170 lbm/hr

B. 4,950 lbm/hr

C. 14,230 lbm/hr

D. 16,870 lbm/hr

ANSWER: D.

TOPIC: 293003
KNOWLEDGE: K1.23 [2.8/3.1]
QID: B7038 (P7039)

Given the following initial conditions for a spent fuel pool:

Spent fuel decay heat rate	=	5.0 MW
Spent fuel pool water temperature	=	90°F
Spent fuel pool water mass	=	2.5×10^6 lbm
Spent fuel pool water specific heat	=	1.0 Btu/lbm-°F

If a complete loss of spent fuel pool cooling occurs, how long will it take for spent fuel pool water temperature to reach 212°F? (Assume that the spent fuel pool remains in thermal equilibrium, and that there is no heat removal from the spent fuel pool.)

A. 18 hours

B. 31 hours

C. 48 hours

D. 61 hours

ANSWER: A.

TOPIC: 293003
KNOWLEDGE: K1.23 [2.8/3.1]
QID: B7138 (P7140)

A nuclear power plant is operating with the following main steam parameters at the main turbine steam inlet valves:

Pressure = 1,050 psia
Quality = 100 percent

The main turbine steam chest pressure is 400 psia. Assuming an ideal throttling process, which one of the following describes the steam in the steam chest?

A. Saturated, 96 percent quality

B. Saturated, 98 percent quality

C. Saturated, 100 percent quality

D. Superheated

ANSWER: B.

TOPIC: 293003
KNOWLEDGE: K1.23 [2.8/3.1]
QID: B7238 (P7239)

An open vessel contains 1.0 lbm of water at 120°F and standard atmospheric pressure. Which one of the following will be caused by the addition of 540 Btu to the water?

A. The water temperature will increase to approximately 212°F; and less than 50 percent of the water will vaporize.

B. The water temperature will increase to approximately 212°F; and more than 50 percent of the water will vaporize.

C. The water temperature will increase to significantly higher than 212°F; and less than 50 percent of the water will vaporize.

D. The water temperature will increase to significantly higher than 212°F; and more than 50 percent of the water will vaporize.

ANSWER: A.

TOPIC: 293003
KNOWLEDGE: K1.23 [2.8/3.1]
QID: B7338 (P7339)

Saturated steam at 1,000 psia enters an ideal high pressure (HP) turbine and exhausts at 100 psia. The HP turbine exhaust then enters an ideal low pressure (LP) turbine and exhausts to a steam condenser at 1.5 psia. Which one of the following will cause the HP and LP turbines to produce more equal power? (Assume all pressures remain the same unless stated otherwise.)

A. Reheat the HP turbine exhaust.

B. Lower the steam condenser pressure.

C. Remove the moisture from the HP turbine exhaust.

D. Decrease the pressure of the saturated steam entering the HP turbine.

ANSWER: C.

TOPIC: 293003
KNOWLEDGE: K1.23 [2.8/3.1]
QID: B7438

A nuclear power plant experienced a reactor scram. One hour after the scram, core cooling is being accomplished by relieving saturated steam from the reactor vessel (RV). Water level in the RV is being maintained by an operating feedwater pump. Average fuel temperature is stable.

Given the following current conditions:

Core decay heat rate	=	33 MW
RV pressure	=	1,000 psia
Feedwater temperature	=	90°F

For the above conditions, approximately what feedwater flow rate is needed to maintain a constant mass of water in the RV?

A. 100,000 lbm/hr

B. 125,000 lbm/hr

C. 170,000 lbm/hr

D. 215,000 lbm/hr

ANSWER: A.

TOPIC: 293004
KNOWLEDGE: K1.04 [2.5/2.6]
QID: B76

Refer to the drawing of a steam-jet air ejector (see figure below) in normal operation with supersonic steam velocities.

At which one of the following locations is the lowest pressure experienced?

A. 1

B. 2

C. 3

D. 4

ANSWER: B.

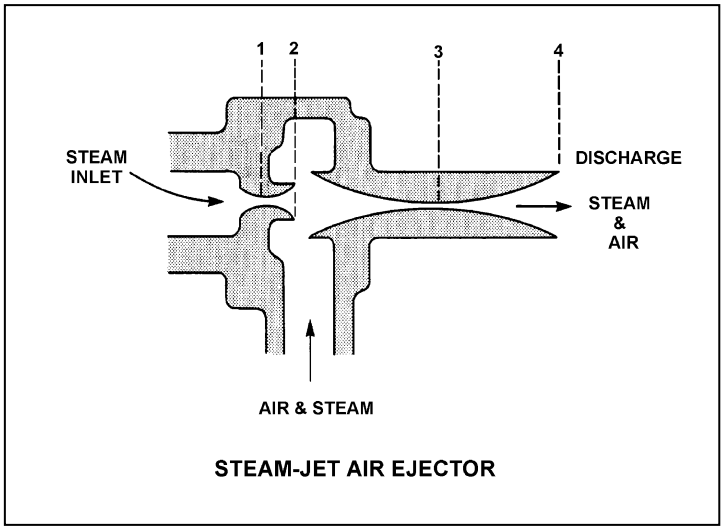

TOPIC: 293004
KNOWLEDGE: K1.04 [2.5/2.6]
QID: B376

Refer to the drawing of a steam-jet air ejector (see figure below) in normal operation with steam reaching supersonic velocities.

Steam flowing from D to E undergoes a pressure _____ and a velocity _____.

A. decrease; decrease

B. decrease; increase

C. increase; increase

D. increase; decrease

ANSWER: D.

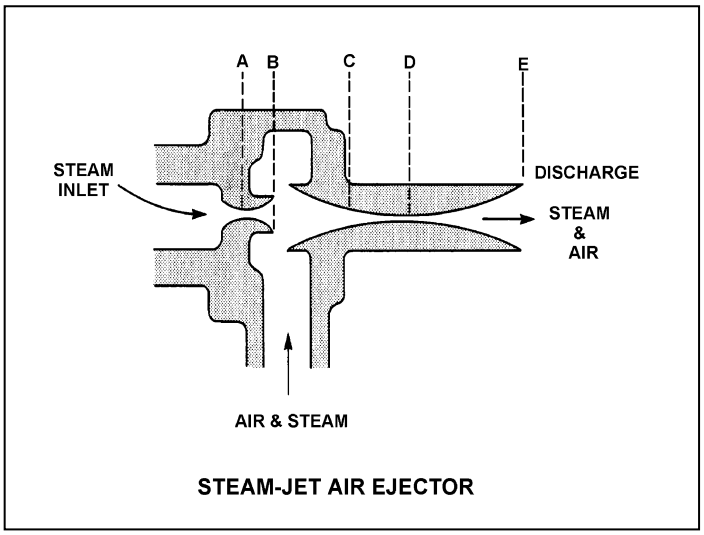

TOPIC: 293004
KNOWLEDGE: K1.04 [2.5/2.6]
QID: B476

Refer to the drawing of a steam-jet air ejector (see figure below) in normal operation.

The section of the air ejector that converts steam pressure into kinetic energy is called the...

A. diffuser.

B. nozzle.

C. intercondenser.

D. riser.

ANSWER: B.

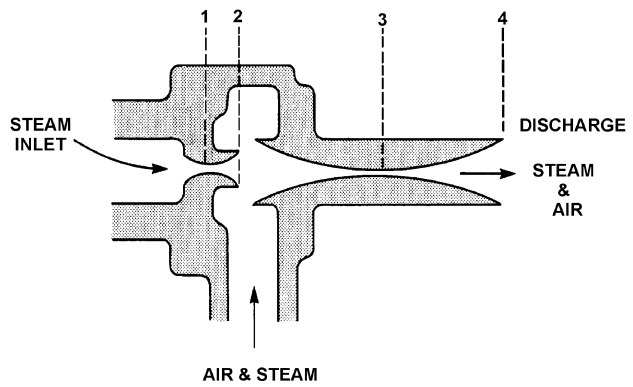

STEAM-JET AIR EJECTOR

TOPIC: 293004
KNOWLEDGE: K1.04 [2.5/2.6]
QID: B1276

The steam inlet nozzles used in steam jet air ejectors convert the _____ of the steam into _____.

A. kinetic energy; pressure

B. enthalpy; kinetic energy

C. kinetic energy; velocity

D. enthalpy; pressure

ANSWER: B.

TOPIC: 293004
KNOWLEDGE: K1.04 [2.5/2.6]
QID: B1476

Steam entering an air ejector reaches sonic velocity in the throat of a convergent-divergent nozzle. Upon entering the divergent section of the nozzle, steam velocity will _____ and steam pressure will _____.

A. increase; increase

B. increase; decrease

C. decrease; increase

D. decrease; decrease

ANSWER: B.

TOPIC: 293004
KNOWLEDGE: K1.04 [2.5/2.6]
QID: B1775

Refer to the drawing of a steam-jet air ejector (see figure below) in normal operation with supersonic steam velocities.

Steam flowing from 1 to 2 undergoes a pressure _____ and a velocity _____.

A. increase; decrease

B. increase; increase

C. decrease; decrease

D. decrease; increase

ANSWER: D.

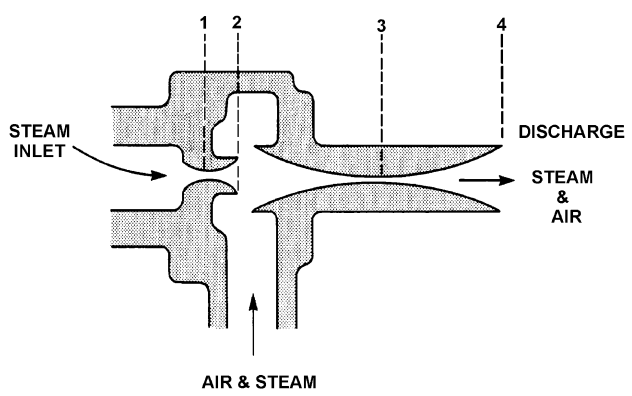

STEAM-JET AIR EJECTOR

TOPIC: 293004
KNOWLEDGE: K1.04 [2.5/2.6]
QID: B3476

Refer to the drawing of a steam-jet air ejector (see figure below) in normal operation with the steam attaining supersonic velocity.

Steam flowing from C to D undergoes a pressure _____ and a velocity _____.

A. decrease; decrease

B. decrease; increase

C. increase; increase

D. increase; decrease

ANSWER: D.

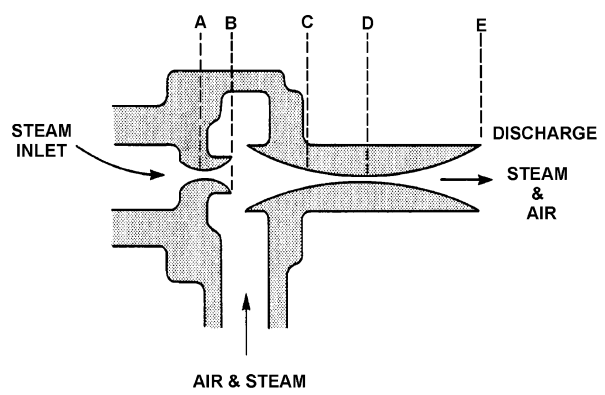

STEAM-JET AIR EJECTOR

TOPIC: 293004
KNOWLEDGE: K1.05 [2.7/2.7]
QID: B276

During jet pump operation, high pressure and low velocity fluid flow is supplied to a _____ where the velocity increases and the pressure drops to create a low pressure area in the _____.

A. nozzle; throat

B. nozzle; diffuser

C. diffuser; throat

D. diffuser; nozzle

ANSWER: A.

TOPIC: 293004
KNOWLEDGE: K1.05 [2.7/2.7]
QID: B1076

The <u>lowest</u> pressure in a liquid jet pump exists in the...

A. throat.

B. diffuser.

C. rams head.

D. impeller eye.

ANSWER: A.

TOPIC: 293004
KNOWLEDGE: K1.12 [2.9/3.1]
QID: B77

Condensate depression (subcooling) will increase if the _____ increases.

A. main turbine load

B. condenser cooling water temperature

C. condenser cooling water flow rate

D. air leakage rate into the condenser

ANSWER: C.

TOPIC: 293004
KNOWLEDGE: K1.12 [2.9/3.1]
QID: B78 (P2276)

The steam cycle thermal efficiency of a nuclear power plant can be increased by...

A. decreasing power from 100 percent to 25 percent.

B. removing a high-pressure feedwater heater from service.

C. lowering condenser vacuum from 29 inches to 25 inches.

D. decreasing the amount of condensate depression (subcooling).

ANSWER: D.

TOPIC: 293004
KNOWLEDGE: K1.12 [2.9/3.1]
QID: B200

A nuclear power plant is operating at 90 percent of rated power. Which one of the following effects will result from an increase in main condenser vacuum (lower absolute pressure)? (Assume reactor power and main steam mass flow rate are unchanged.)

A. An increase in condensate temperature.

B. An increase in the heat transfer rate in the main condenser.

C. An increase in main turbine efficiency.

D. An increase in condensate subcooling.

ANSWER: C.

TOPIC: 293004
KNOWLEDGE: K1.12 [2.9/3.1]
QID: B277 (P477)

Main condenser pressure is 1.0 psia. During the cooling process in the condenser, the temperature of the low pressure turbine exhaust decreases to 100°F, at which time it is a...

A. saturated liquid.

B. saturated vapor.

C. subcooled liquid.

D. superheated vapor.

ANSWER: C.

TOPIC: 293004
KNOWLEDGE: K1.12 [2.9/3.1]
QID: B1484 (P3576)

A main condenser is operating at 28 inches Hg vacuum with a condensate outlet temperature of 92°F. Which one of the following is the approximate amount of condensate depression?

A. 5°F

B. 9°F

C. 13°F

D. 17°F

ANSWER: B.

TOPIC: 293004
KNOWLEDGE: K1.12 [2.9/3.1]
QID: B1876 (P876)

Which one of the following is the approximate condensate subcooling in a steam condenser operating at 26 inches Hg vacuum with a condensate temperature of 100°F?

A. 2°F

B. 19°F

C. 25°F

D. 53°F

ANSWER: C.

TOPIC: 293004
KNOWLEDGE: K1.12 [2.9/3.1]
QID: B2077 (P2476)

A nuclear power plant is operating at 90 percent of rated power. Main condenser pressure is 1.69 psia and hotwell condensate temperature is 120°F.

Which one of the following describes the effect of a 5 percent decrease in cooling water flow rate through the main condenser on steam cycle thermal efficiency?

A. Efficiency will increase, because condensate depression will decrease.

B. Efficiency will increase, because the work output of the main turbine will increase.

C. Efficiency will decrease, because condensate depression will increase.

D. Efficiency will decrease, because the work output of the main turbine will decrease.

ANSWER: D.

TOPIC: 293004
KNOWLEDGE: K1.12 [2.9/3.1]
QID: B2176 (P1176)

A nuclear power plant is operating at 80 percent power with 5°F of condensate depression in the main condenser. If the condensate depression increases to 10°F, the steam cycle thermal efficiency will _____; and the condensate pumps will operate _____ cavitation.

A. increase; closer to

B. increase; farther from

C. decrease; closer to

D. decrease; farther from

ANSWER: D.

TOPIC: 293004
KNOWLEDGE: K1.12 [2.9/3.1]
QID: B2277 (P74)

Condensate depression is the process of...

A. removing condensate from turbine exhaust steam.

B. spraying condensate into turbine exhaust steam.

C. heating turbine exhaust steam above its saturation temperature.

D. cooling turbine exhaust steam below its saturation temperature.

ANSWER: D.

TOPIC: 293004
KNOWLEDGE: K1.12 [2.9/3.1]
QID: B2576 (P2576)

A nuclear power plant is operating at 80 percent power with 5°F of condensate depression in the main condenser. If the condensate depression decreases to 2°F, the steam cycle thermal efficiency will _____; and the condensate pumps will operate _____ cavitation.

A. increase; closer to

B. increase; farther from

C. decrease; closer to

D. decrease; farther from

ANSWER: A.

TOPIC: 293004
KNOWLEDGE: K1.12 [2.9/3.1]
QID: B2676 (P576)

Which one of the following explains why condensate subcooling is necessary in a nuclear power plant steam cycle?

A. To provide a better condenser vacuum.

B. To maximize overall steam cycle thermal efficiency.

C. To provide net positive suction head for the condensate pumps.

D. To minimize turbine blade and condenser tube erosion by entrained moisture.

ANSWER: C.

TOPIC: 293004
KNOWLEDGE: K1.12 [2.9/3.1]
QID: B2775 (P1977)

Condensate is collecting in a main condenser hotwell at 90°F with a condenser pressure of 28 inches Hg vacuum. Which one of the following will improve the steam cycle thermal efficiency?

A. Main condenser cooling water flow rate decreases by 5 percent with no change in condenser vacuum.

B. Main condenser cooling water inlet temperature decreases by 10°F with no change in condenser vacuum.

C. Main condenser vacuum decreases to 27 inches Hg due to buildup of noncondensible gases.

D. Steam flow through the turbine decreases by 10 percent with no change in condenser vacuum.

ANSWER: A.

TOPIC: 293004
KNOWLEDGE: K1.12 [2.9/3.1]
QID: B2976 (P1576)

What is the approximate condensate depression in a condenser operating at 28 inches Hg vacuum with a condensate temperature of 100°F?

A. Less than 2°F

B. 3°F to 5°F

C. 6°F to 8°F

D. 9°F to 11°F

ANSWER: A.

TOPIC: 293004
KNOWLEDGE: K1.12 [2.9/3.1]
QID: B3877 (P3876)

Main turbine exhaust enters a main condenser and condenses at 126°F. The condensate is cooled to 100°F before entering the main condenser hotwell. Assuming main condenser vacuum does <u>not</u> change, which one of the following would improve the thermal efficiency of the steam cycle?

A. Increase condenser cooling water flow rate by 5 percent.

B. Decrease condenser cooling water flow rate by 5 percent.

C. Increase main condenser hotwell level by 5 percent.

D. Decrease main condenser hotwell level by 5 percent.

ANSWER: B.

TOPIC: 293004
KNOWLEDGE: K1.13 [2.5/2.6]
QID: B377

A nuclear power plant is operating at 100 percent power when the only in-service steam jet air ejector is inadvertently isolated from the main condenser. The operator verifies that condenser cooling water system parameters have not changed. If no operator action is taken over the next 60 minutes, condenser pressure will...

A. slowly decrease.

B. slowly increase and stabilize at a slightly higher pressure.

C. slowly and continuously increase towards atmospheric pressure.

D. remain the same.

ANSWER: C.

TOPIC: 293004
KNOWLEDGE: K1.13 [2.5/2.6]
QID: B877

Which one of the following explains why condensation of the steam entering a main condenser creates a vacuum?

A. The entropy of the steam increases.

B. The entropy of the steam decreases.

C. The specific volume of the steam increases.

D. The specific volume of the steam decreases.

ANSWER: D.

TOPIC: 293004
KNOWLEDGE: K1.13 [2.5/2.6]
QID: B977

A nuclear power plant is operating at 90 percent power. Which one of the following describes the effect of increasing cooling water flow rate through the main condenser?

A. The saturation temperature in the main condenser decreases.

B. The enthalpy of the condensate leaving the main condenser increases.

C. The temperature of the cooling water leaving the main condenser increases.

D. The total rate of heat transfer from the turbine exhaust steam to the cooling water decreases.

ANSWER: A.

TOPIC: 293004
KNOWLEDGE: K1.13 [2.5/2.6]
QID: B1177

A nuclear power plant is operating at 100 percent power. Which one of the following describes how and why main condenser pressure changes when condenser cooling water flow rate significantly decreases?

A. Decreases, because main condenser saturation temperature increases.

B. Decreases, because main condenser condensate subcooling decreases.

C. Increases, because main condenser saturation temperature increases.

D. Increases, because main condenser condensate subcooling decreases.

ANSWER: C.

TOPIC: 293004
KNOWLEDGE: K1.13 [2.5/2.6]
QID: B2377

A nuclear power plant is operating at 100 percent power. Which one of the following describes how and why main condenser pressure will change if condenser cooling water flow rate increases significantly?

A. Decreases, because main condenser saturation temperature decreases.

B. Decreases, because main condenser condensate subcooling increases.

C. Increases, because main condenser saturation temperature decreases.

D. Increases, because main condenser condensate subcooling increases.

ANSWER: A.

TOPIC: 293004
KNOWLEDGE: K1.14 [2.6/2.7]
QID: B1677

Which one of the following is a primary function performed by a main condenser?

A. Deaerate turbine exhaust condensate

B. Remove ions from main condensate

C. Filter out impurities from main condensate

D. Provide net positive suction head for feed water pumps

ANSWER: A.

TOPIC: 293004
KNOWLEDGE: K1.14 [2.6/2.7]
QID: B1777

A nuclear power plant is operating normally at 80 percent power. Which one of the following will result in the most rapid initial loss of condenser vacuum?

A. All air ejectors are isolated from the main condenser.

B. All feed and condensate pumps are stopped.

C. All condenser cooling water flow is stopped.

D. All condenser hotwell makeup water flow is stopped.

ANSWER: C.

TOPIC: 293004
KNOWLEDGE: K1.14 [2.6/2.7]
QID: B3077 (P3078)

Which one of the following will be caused by a decrease in main condenser vacuum (higher absolute pressure) in a nuclear power plant operating at full power? (Assume main steam and main condenser circulating water mass flow rates do not change.)

A. Decrease in the condensate temperature.

B. Decrease in the ideal steam cycle thermal efficiency.

C. Decrease in the condensate pump required net positive suction head.

D. Decrease in the mass of noncondensible gases in the condenser.

ANSWER: B.

TOPIC: 293004
KNOWLEDGE: K1.14 [2.6/2.7]
QID: B3777 (P3734)

A nuclear power plant is operating near rated power with the following initial conditions:

Main steam pressure = 900 psia
Main steam quality = 100 percent, saturated vapor
Main condenser pressure = 1.0 psia

Air leakage into the main condenser results in the main condenser pressure increasing and stabilizing at 2.0 psia. Assume that all main steam parameters (e.g., pressure, quality, and mass flow rate) remain the same and that the main turbine efficiency remains at 100 percent.

Which one of the following is the percent by which the main generator MW output will decrease as a result of the main condenser pressure increase?

A. 5.0 percent

B. 6.3 percent

C. 7.5 percent

D. 8.8 percent

ANSWER: C.

TOPIC: 293005
KNOWLEDGE: K1.03 [2.6/2.7]
QID: B678

The location in a main turbine that experiences the greatest amount of blade erosion is the _____ stage of the _____ pressure turbine.

A. last; high

B. last; low

C. first; high

D. first; low

ANSWER: B.

TOPIC: 293005
KNOWLEDGE: K1.03 [2.6/2.7]
QID: B1978 (P2678)

If the moisture content of the steam supplied to a turbine decreases, steam cycle thermal efficiency will increase because the...

A. enthalpy of the steam being supplied to the turbine has increased.

B. mass flow rate of the steam through the turbine has increased.

C. reheat capacity of the turbine extraction steam has increased.

D. the operating temperature of the turbine blades has increased.

ANSWER: A.

TOPIC: 293005
KNOWLEDGE: K1.03 [2.6/2.7]
QID: B2678

A main turbine consists of a high pressure (HP) unit and several low pressure (LP) units. The main turbine is most likely to experience stress-related failures of the rotor blades in the _____ stages of the _____ unit(s).

A. inlet; HP

B. inlet; LP

C. outlet; HP

D. outlet; LP

ANSWER: D.

TOPIC: 293005
KNOWLEDGE: K1.03 [2.6/2.7]
QID: B2978 (P2278)

If the moisture content of the steam supplied to a main turbine increases, turbine work will... (Assume steam mass flow rate does <u>not</u> change.)

A. decrease, because the enthalpy of the steam being supplied to the turbine has decreased.

B. decrease, because moist steam is more likely to leak between turbine stages.

C. increase, because the enthalpy of the steam being supplied to the turbine has increased.

D. increase, because moist steam is less likely to leak between turbine stages.

ANSWER: A.

TOPIC: 293005
KNOWLEDGE: K1.03 [2.6/2.7]
QID: B7240 (P7241)

A nuclear power plant has a thermal power rating of 3,200 MW. When the plant operates at 100 percent power, the main generator produces 1,200 MW at a 0.95 power factor. Plant modifications are planned that will upgrade the feedwater heaters and moisture separator/reheaters without changing the plant's thermal power rating. If the plant modifications improve plant thermal efficiency by 2 percent, what will be the resulting main generator electrical output at 100 percent reactor power with the same power factor?

A. 1,204 MW

B. 1,224 MW

C. 1,244 MW

D. 1,264 MW

ANSWER: D.

TOPIC: 293005
KNOWLEDGE: K1.05 [2.7/2.8]
QID: B129

Which one of the following lists the initial effects of isolating extraction steam to a high pressure feedwater heater while at 90 percent power?

A. Core inlet subcooling remains the same and main generator MW output decreases.

B. Core inlet subcooling and reactor power both decrease.

C. Reactor power and main generator MW output remain the same.

D. Core inlet subcooling and main generator MW output both increase.

ANSWER: D.

TOPIC: 293005
KNOWLEDGE: K1.05 [2.7/2.8]
QID: B140

A direct advantage of using feedwater heaters in a typical steam cycle is that feedwater heaters increase the...

A. cycle efficiency.

B. turbine efficiency.

C. turbine MW output.

D. feedwater pump net positive suction head.

ANSWER: A.

TOPIC: 293005
KNOWLEDGE: K1.05 [2.7/2.8]
QID: B278

Which one of the following is the most probable location for superheated steam in a boiling water reactor steam cycle that uses moisture-separator reheaters?

A. The outlet of the high pressure turbine.

B. The inlet of the low pressure turbines.

C. The inlet of the high pressure turbine.

D. The outlet of the low pressure turbines.

ANSWER: B.

TOPIC: 293005
KNOWLEDGE: K1.05 [2.7/2.8]
QID: B978

A nuclear power plant is operating steady-state at 85 percent power when the extraction steam to a high pressure feedwater heater is isolated. Which one of the following describes the initial effect on main generator output (MW)? (Assume no operator action and no reactor protection actuation.)

A. Increases, because the steam cycle thermal efficiency increases.

B. Decreases, because the steam cycle thermal efficiency decreases.

C. Increases, because the total steam flow rate through the main turbine increases.

D. Decreases, because the total steam flow rate through the main turbine decreases.

ANSWER: C.

TOPIC: 293005
KNOWLEDGE: K1.05 [2.7/2.8]
QID: B1278 (P3378)

A nuclear power plant was initially operating at steady-state 90 percent reactor power when extraction steam to the feedwater heaters was isolated. With extraction steam still isolated, reactor power was returned to 90 percent and the plant was stabilized.

Compared to the initial main generator MW output, the current main generator MW output is...

A. lower, because the steam cycle is less efficient.

B. higher, because the steam cycle is less efficient.

C. lower, because more steam heat energy is available to the main turbine.

D. higher, because more steam heat energy is available to the main turbine.

ANSWER: A.

TOPIC: 293005
KNOWLEDGE: K1.05 [2.7/2.8]
QID: B1378

A nuclear power plant is operating at 80 percent power with 10°F of condensate subcooling. Which one of the following initially will increase the steam cycle thermal efficiency? (Assume main condenser vacuum does not change unless stated otherwise.)

A. Isolating extraction steam to a feedwater heater.

B. Decreasing main condenser cooling water flow rate.

C. Decreasing main condenser cooling water inlet temperature.

D. Decreasing main condenser vacuum (increasing pressure).

ANSWER: B.

TOPIC: 293005
KNOWLEDGE: K1.05 [2.7/2.8]
QID: B1679 (P1980)

A nuclear power plant is initially operating at 85 percent reactor power when extraction steam to a high pressure feedwater heater is isolated. Main generator load is returned to its initial value. When the plant stabilizes, reactor power will be _____ than 85 percent; and the steam cycle thermal efficiency will be _____.

A. greater; lower

B. greater; higher

C. less; lower

D. less; higher

ANSWER: A.

TOPIC: 293005
KNOWLEDGE: K1.05 [2.7/2.8]
QID: B1879 (P1878)

A nuclear power plant is operating at 85 percent power when the extraction steam to a high pressure feedwater heater is isolated. After the transient, the operator returns reactor power to 85 percent and stabilizes the plant. Compared to the conditions just prior to the transient, the current main generator output (MW) is...

A. higher, because increased steam flow to the main turbine caused the main generator to pick up load.

B. lower, because decreased steam flow to the main turbine caused the main generator to reject load.

C. higher, because the steam cycle thermal efficiency has increased.

D. lower, because the steam cycle thermal efficiency has decreased.

ANSWER: D.

TOPIC: 293005
KNOWLEDGE: K1.05 [2.7/2.8]
QID: B2178 (P2178)

If superheating of the inlet steam to a low pressure (LP) turbine is reduced, LP turbine work output will _____; and LP turbine exhaust moisture content will _____. (Assume steam mass flow rate does not change.)

A. remain the same; increase

B. remain the same; decrease

C. decrease; increase

D. decrease; decrease

ANSWER: C.

TOPIC: 293005
KNOWLEDGE: K1.05 [2.7/2.8]
QID: B3378 (P3375)

Given the following:

- A saturated steam-water mixture with an inlet quality of 60 percent is flowing through a moisture separator.
- The moisture separator is 100 percent efficient for removing moisture.

How much moisture will be removed by the moisture separator from 50 lbm of the steam-water mixture?

A. 10 lbm

B. 20 lbm

C. 30 lbm

D. 40 lbm

ANSWER: B.

TOPIC: 293005
KNOWLEDGE: K1.05 [2.7/2.8]
QID: B3578 (P378)

Steam turbines X and Y are identical 100 percent efficient turbines that exhaust to a condenser at 1.0 psia. Saturated steam at 250 psia enters turbine X. Superheated steam at 250 psia and 500°F enters turbine Y.

Which one of the following lists the percentage of moisture at the exhaust of turbines X and Y?

	Turbine X	Turbine Y
A.	24.5%	20.5%
B.	26.3%	13.0%
C.	24.5%	13.0%
D.	26.3%	20.5%

ANSWER: A.

TOPIC: 293005
KNOWLEDGE: K1.05 [2.7/2.8]
QID: B3778 (P3774)

Given the following:

- A saturated steam-water mixture with an inlet quality of 40 percent is flowing through a moisture separator.
- The moisture separator is 100 percent efficient for removing water.

How much water will be removed by the moisture separator from 50 lbm of the steam-water mixture?

A. 10 lbm

B. 20 lbm

C. 30 lbm

D. 40 lbm

ANSWER: C.

TOPIC: 293005
KNOWLEDGE: K1.05 [2.7/2.8]
QID: B7440

A nuclear power plant is initially operating at steady-state 85 percent reactor power when the extraction steam to a high pressure feedwater heater is isolated. Compared to the initial main generator output (MW), after the plant is stabilized at 85 percent reactor power with the extraction steam isolated the main generator output (MW) will be…

A. lower, because the steam cycle thermal efficiency has decreased.

B. lower, because the steam mass flow rate through the main turbine has decreased.

C. higher, because the steam cycle thermal efficiency has increased.

D. higher, because the steam mass flow rate through the main turbine has increased.

ANSWER: A.

TOPIC: 293006
KNOWLEDGE: K1.03 [2.4/2.5]
QID: B925 (P1921)

Refer to the drawing of centrifugal pump and system operating curves (see figure below).

Which one of the following determines the general shape of the curve from point C to point D?

A. The frictional and throttling losses in the piping system as the system flow rate increases.

B. The frictional losses between the pump impeller and its casing as the differential pressure (D/P) across the pump increases.

C. The pump flow losses, due to the decrease in available net positive suction head as the system flow rate increases.

D. The pump flow losses, due to back leakage through the clearances between the pump impeller and casing as the D/P across the pump increases.

ANSWER: A.

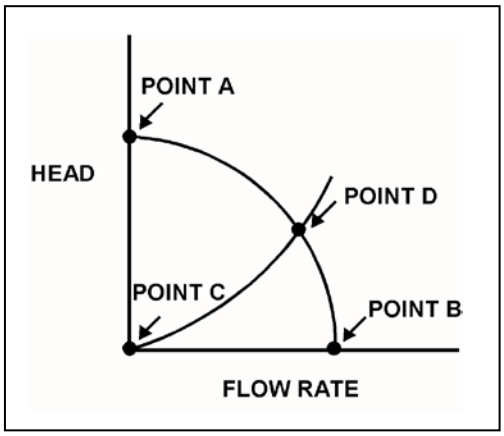

TOPIC: 293006
KNOWLEDGE: K1.03 [2.4/2.5]
QID: B979

Head loss is the...

A. reduction in discharge pressure experienced by a real pump due to slippage.

B. reduction in discharge pressure experienced by a real pump due to mechanical friction.

C. conversion of system fluid pressure and velocity to heat energy as a result of friction.

D. decrease in static pressure in a piping system resulting from decreases in elevation.

ANSWER: C.

TOPIC: 293006
KNOWLEDGE: K1.05 [3.2/3.3]
QID: B79 (P80)

If a valve closure suddenly stops fluid flow, the resulting piping system pressure spike is referred to as...

A. cavitation.

B. shutoff head.

C. water hammer.

D. valve chatter.

ANSWER: C.

TOPIC: 293006
KNOWLEDGE: K1.05 [3.2/3.3]
QID: B148 (P2279)

Which one of the following operating practices minimizes the possibility of water hammer?

A. Change valve position as rapidly as possible.

B. Start a centrifugal pump with the discharge valve throttled.

C. Start a positive displacement pump with the discharge valve closed.

D. Vent a system only after initiating system flow.

ANSWER: B.

TOPIC: 293006
KNOWLEDGE: K1.05 [3.2/3.3]
QID: B279 (P679)

A sudden stop of fluid flow in a piping system, due to rapid closure of an isolation valve, will most likely result in...

A. check valve slamming.

B. pump runout.

C. piping hanger damage.

D. pressurized thermal shock.

ANSWER: C.

TOPIC: 293006
KNOWLEDGE: K1.05 [3.2/3.3]
QID: B380 (P381)

The major concern with starting a main feedwater pump with downstream fluid in a saturated condition is...

A. cavitation.

B. water hammer.

C. thermal shock.

D. positive reactivity addition.

ANSWER: B.

TOPIC: 293006
KNOWLEDGE: K1.05 [3.2/3.3]
QID: B1180 (P2480)

Which one of the following will increase the possibility of water hammer?

A. Opening and closing system valves very slowly.

B. Venting liquid systems only after initiating system flow.

C. Starting centrifugal pumps with the discharge valve closed.

D. Starting positive displacement pumps with the discharge valve open.

ANSWER: B.

TOPIC: 293006
KNOWLEDGE: K1.05 [3.2/3.3]
QID: B2081 (P2079)

Which one of the following will minimize the possibility of water hammer?

A. Draining the discharge line of a centrifugal pump after shutdown.

B. Draining condensate out of steam lines before and after initiating flow.

C. Starting a centrifugal pump with its discharge valve fully open.

D. Starting a positive displacement pump with its discharge valve partially closed.

ANSWER: B.

TOPIC: 293006
KNOWLEDGE: K1.05 [3.2/3.3]
QID: B2679 (P2279)

Which one of the following operating practices minimizes the possibility of water hammer?

A. Change valve positions as rapidly as possible.

B. Start centrifugal pumps with the discharge valve throttled.

C. Start positive displacement pumps with the discharge valve closed.

D. Vent systems only after initiating system flow.

ANSWER: B.

TOPIC: 293006
KNOWLEDGE: K1.05 [3.2/3.3]
QID: B2779 (P1879)

Which one of the following describes why large steam lines are gradually warmed instead of suddenly admitting full steam flow?

A. To minimize the possibility of stress corrosion cracking of the steam lines.

B. To minimize the total thermal expansion of the steam lines.

C. To minimize the potential for water hammer in the steam lines.

D. To minimize the heat loss from the steam lines.

ANSWER: C.

TOPIC: 293006
KNOWLEDGE: K1.05 [3.2/3.3]
QID: B4041 (P4042)

Refer to the drawing of two lengths of 6-inch diameter pipe, each containing an identical automatic isolation valve. The actual pipe lengths are proportional to their symbols in the drawing

Water at 65°F is flowing at 1,000 gpm through each pipe. If the isolation valves instantly close, valve A piping will experience a pressure increase that is _____ the pressure increase experienced by valve B piping; and the pressure spike will dissipate quicker in the _____ length of pipe.

A. equal to; shorter

B. equal to; longer

C. less than; shorter

D. less than; longer

ANSWER: A.

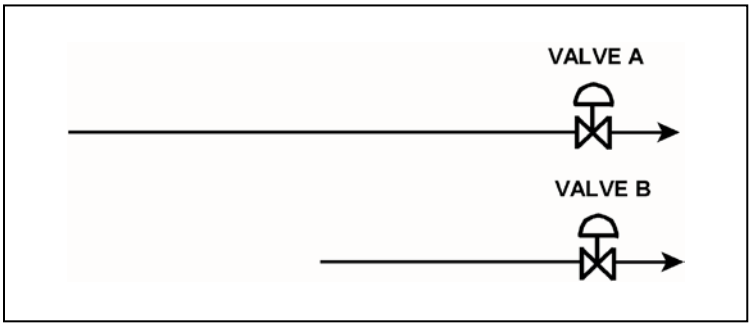

TOPIC: 293006
KNOWLEDGE: K1.05 [3.2/3.3]
QID: B6241 (P6242)

Refer to the drawing of two lengths of 16-inch diameter pipe, each containing an identical automatic isolation valve. The actual pipe lengths are proportional to their symbols in the drawing.

Water is flowing at 10,000 gpm through each pipe when both isolation valves instantly close. Consider two cases:

Case 1: The water temperature upstream of both valves is 65°F.
Case 2: The water temperature is 65°F upstream of valve A, and 85°F upstream of valve B.

For which case(s), if any, will valve A experience a pressure spike that is greater than the pressure spike at valve B?

A. Case 1 only

B. Case 2 only

C. Both cases

D. Neither case

ANSWER: B.

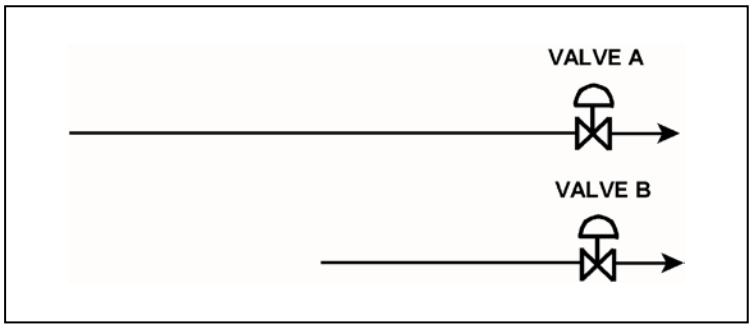

TOPIC: 293006
KNOWLEDGE: K1.05 [3.2/3.3]
QID: B6741 (P6742)

Refer to the drawing of two lengths of 16-inch diameter pipe, each containing an identical automatic isolation valve. The actual pipe lengths are proportional to their symbols in the drawing.

Water is flowing at 10,000 gpm through each pipe when both isolation valves instantly close.

Consider two cases:

Case 1: The water temperature upstream of both valves is 65°F.
Case 2: The water temperature is 85°F upstream of valve A, and 65°F upstream of valve B.

For which case(s), if any, will valve A experience a pressure spike that is greater than the pressure spike at valve B?

A. Case 1 only

B. Case 2 only

C. Both cases

D. Neither case

ANSWER: D.

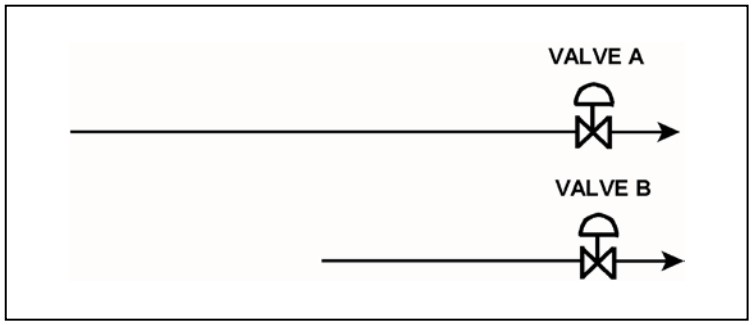

TOPIC: 293006
KNOWLEDGE: K1.06 [2.5/2.6]
QID: B1480

Which one of the following components of a centrifugal pump has the specific primary function of converting the kinetic energy of a fluid into pressure?

A. Volute

B. Impeller

C. Pump shaft

D. Discharge nozzle

ANSWER: A.

TOPIC: 293006
KNOWLEDGE: K1.07 [2.5/2.6]
QID: B479

If the discharge valve of an operating ideal positive displacement pump is repositioned from fully open to 75 percent open, pump head will _____; and pump flow rate will _____.

A. increase; remain the same

B. increase; decrease

C. remain the same; remain the same

D. remain the same; decrease

ANSWER: A.

TOPIC: 293006
KNOWLEDGE: K1.07 [2.5/2.6]
QID: B1280

Which one of the following describes pump head?

A. The energy added by a pump to increase fluid pressure or velocity.

B. The energy added by a pump in excess of shutoff head.

C. The fluid energy required to ensure a pump does not cavitate.

D. The fluid energy contained at the inlet of a pump.

ANSWER: A.

TOPIC: 293006
KNOWLEDGE: K1.07 [2.5/2.6]
QID: B1680 (P3525)

An ideal positive displacement pump is pumping to a system operating at 100 psig. Assume pump speed is constant, zero pump slip, and pump backpressure remains within normal pump operating limits.

If system pressure increases to 200 psig, the pump head will _____; and pump flow rate will _____.

A. increase; remain the same

B. increase; decrease

C. remain the same; remain the same

D. remain the same; decrease

ANSWER: A.

TOPIC: 293006
KNOWLEDGE: K1.08 [2.5/2.6]
QID: B198

Which one of the following statements describes application of centrifugal pump laws?

A. Pump head is directly proportional to speed.

B. Power varies as the square of the speed.

C. Pump head varies as the square of the speed.

D. Capacity varies as the cube of the speed.

ANSWER: C.

TOPIC: 293006
KNOWLEDGE: K1.08 [2.5/2.6]
QID: B322 (P325)

Increasing the flow rate from a centrifugal pump by throttling open the discharge valve will cause pump head to...

A. increase and stabilize at a higher value.

B. decrease and stabilize at a lower value.

C. remain constant because pump head is a design parameter.

D increase, then decrease following the pump's efficiency curve.

ANSWER: B.

TOPIC: 293006
KNOWLEDGE: K1.08 [2.5/2.6]
QID: B2579

Decreasing the flow rate from a centrifugal pump by throttling the pump discharge valve will cause pump head to...

A. increase and stabilize at a higher value.

B. decrease and stabilize at a lower value.

C. remain constant because pump head is a design parameter.

D. decrease, then increase following the pump's efficiency curve.

ANSWER: A.

TOPIC: 293006
KNOWLEDGE: K1.08 [2.5/2.6]
QID: B3579 (P2923)

Refer to the drawing of four sets of centrifugal pump and system operating curves (see figure below). Each set of curves shows the results of a change in pump and/or system operating conditions.

Initially, a two-speed centrifugal pump is operating at high speed in a cooling water system and discharging through a heat exchanger. The pump is then switched to low speed.

Which set of operating curves depicts the "before" and "after" conditions described above?

A. 1.

B. 2.

C. 3.

D. 4.

ANSWER: B.

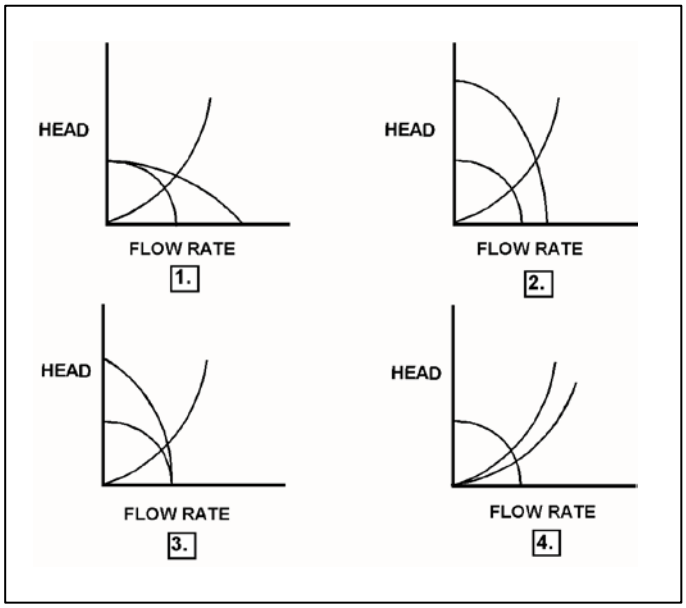

TOPIC: 293006
KNOWLEDGE: K1.09 [2.8/2.9]
QID: B80 (P382)

Which one of the following is most likely to cause cavitation in an operating centrifugal pump?

A. Lowering the suction temperature.

B. Throttling the pump suction valve.

C. Throttling the pump discharge valve.

D. Decreasing the pump speed.

ANSWER: B.

TOPIC: 293006
KNOWLEDGE: K1.09 [2.8/2.9]
QID: B280 (P2680)

Cavitation is the formation of vapor bubbles in the _____ pressure area of a pump followed by the _____ of these bubbles within the pump casing.

A. low; expansion

B. low; collapse

C. high; expansion

D. high; collapse

ANSWER: B.

TOPIC: 293006
KNOWLEDGE: K1.09 [2.8/2.9]
QID: B1880 (P2981)

Pump cavitation occurs when vapor bubbles are formed at the eye of a pump impeller...

A. because the localized flow velocity exceeds sonic velocity for the existing fluid temperature.

B. because the localized pressure exceeds the vapor pressure for the existing fluid temperature.

C. and enter a high pressure region of the pump where they collapse causing damaging pressure pulsations.

D. and are discharged from the pump where they expand into larger bubbles causing damaging pressure pulsations.

ANSWER: C.

TOPIC: 293006
KNOWLEDGE: K1.10 [2.7/2.8]
QID: B82

Net positive suction head is the...

A. difference between pump suction pressure and the saturation pressure of the fluid being pumped.

B. difference between the total suction head and the pressure at the eye of the pump.

C. amount of suction pressure required to prevent cavitation.

D. difference between the pump suction pressure and the pump discharge pressure.

ANSWER: A.

TOPIC: 293006
KNOWLEDGE: K1.10 [2.7/2.8]
QID: B281

The available net positive suction head of a centrifugal pump...

A. decreases with increased subcooling to the pump.

B. decreases with an increase in pump flow rate.

C. increases as the suction temperature increases.

D. decreases as pump discharge pressure increases.

ANSWER: B.

TOPIC: 293006
KNOWLEDGE: K1.10 [2.7/2.8]
QID: B1381

Which one of the following sets of parameters directly affects available net positive suction head for the recirculation pumps?

A. Feedwater temperature, reactor power, and reactor water level

B. Feedwater temperature, reactor pressure, and reactor water level

C. Reactor water level, feedwater flow rate, and reactor power

D. Reactor pressure, reactor power, and feedwater flow rate

ANSWER: B.

TOPIC: 293006
KNOWLEDGE: K1.11 [2.4/2.5]
QID: B381

A single stage centrifugal pump is operating in an open system. Which one of the following is the force caused by subjecting the pump impeller to the unequal pressures that exist at the suction and the discharge of the pump?

A. Axial thrust

B. Radial thrust

C. Kingsbury thrust

D. Journal thrust

ANSWER: A.

TOPIC: 293006
KNOWLEDGE: K1.11 [2.4/2.5]
QID: B680

An AC motor-driven radial-flow centrifugal pump is operating at rated flow and pressure in a cooling water system. A break occurs in the pump discharge piping resulting in a decrease in pump backpressure.

As a result of the break, the pump will operate at a _____ flow rate; and the pump motor will draw _____ electrical power.

A. higher; more

B. higher; less

C. lower; more

D. lower; less

ANSWER: A.

TOPIC: 293006
KNOWLEDGE: K1.12 [2.9/2.9]
QID: B143 (P279)

A centrifugal water pump was returned to service after maintenance. However, the operator failed to vent the pump.

Compared to normal pump operating conditions, after the pump is started the operator will see a _____ flow rate and a _____ discharge head.

A. higher; lower

B. higher; higher

C. lower; lower

D. lower; higher

ANSWER: C.

TOPIC: 293006
KNOWLEDGE: K1.13 [2.6/2.7]
QID: B283

Single-speed centrifugal pump A is operating in a closed system. Identical centrifugal pump B is started in parallel with pump A. The major effect of operating pump B in parallel with pump A is...

A. increased system pressure.

B. increased system flow rate.

C. decreased system pressure.

D. decreased system flow rate.

ANSWER: B.

TOPIC: 293006
KNOWLEDGE: K1.13 [2.6/2.7]
QID: B880

Refer to the drawing of a cooling water system (see figure below).

Pumps A and B are identical single-speed centrifugal pumps, but only pump A is operating. Assume real (non-ideal) system and pump operating characteristics.

If pump B is started, system flow rate will _____; and the total pump head will _____.

A. increase; increase

B. increase; remain the same

C. remain the same; increase

D. remain the same; remain the same

ANSWER: A.

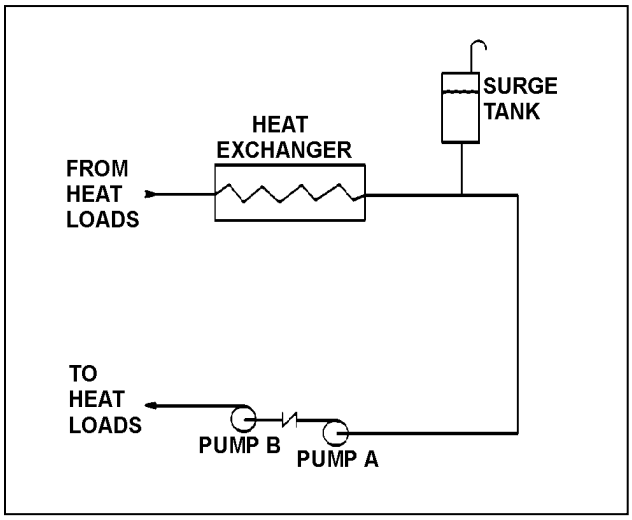

TOPIC: 293006
KNOWLEDGE: K1.13 [2.6/2.7]
QID: B1578 (P926)

Refer to the drawing of four sets of centrifugal pump and system operating curves (see figure below). Each set of curves shows the results of a change in pump and/or system operating conditions.

Two identical constant-speed centrifugal pumps are operating in series in an open system when one pump trips.

Which set of operating curves depicts the "before" and "after" conditions described above?

A. 1.

B. 2.

C. 3.

D. 4.

ANSWER: C.

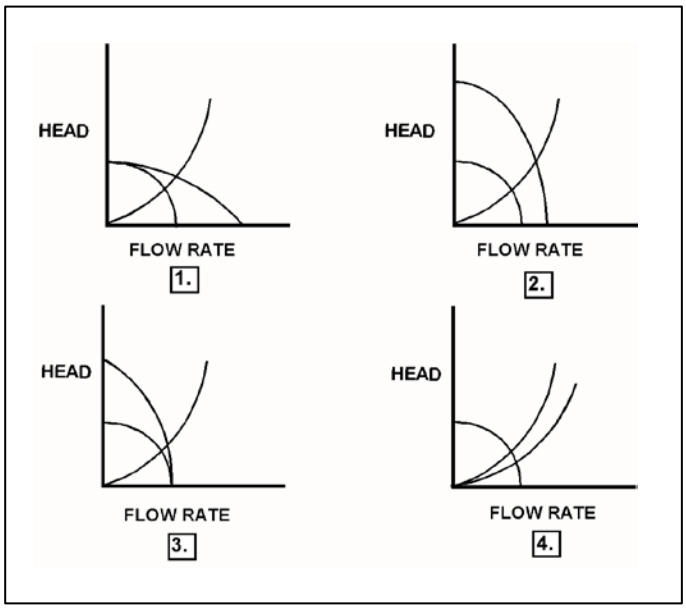

TOPIC: 293006
KNOWLEDGE: K1.13 [2.6/2.7]
QID: B1678

Refer to the drawing of a cooling water system and the associated pump/system operating curves showing two-pump operation (see figure below).

Pumps A and B are identical single-speed centrifugal pumps and both pumps are operating.

If pump B trips, the system flow rate will _____; and the total pump discharge pressure will _____.

A. remain the same; decrease

B. decrease; remain the same

C. remain the same; remain the same

D. decrease; decrease

ANSWER: D.

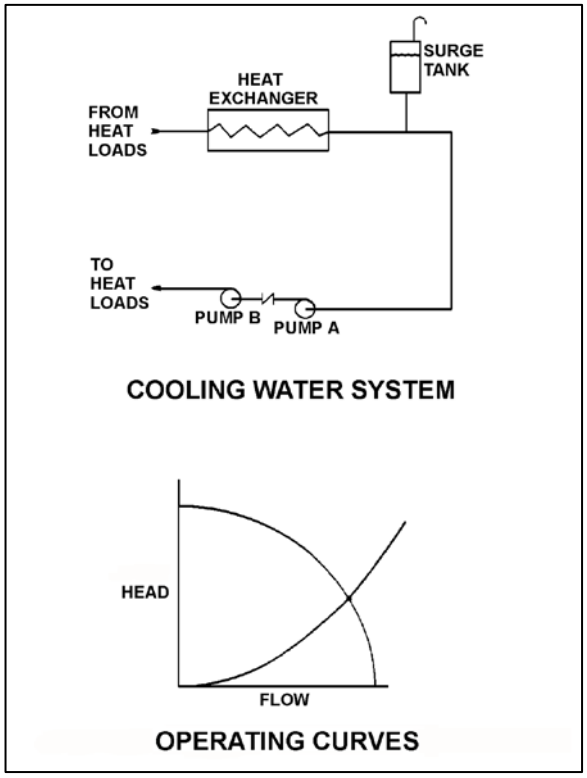

TOPIC: 293006
KNOWLEDGE: K1.13 [2.6/2.7]
QID: B1725 (P1784)

Two identical centrifugal pumps (CPs) and two identical positive displacement pumps (PDPs) are able to take suction on a vented water storage tank and provide makeup water flow to a cooling water system. The pumps are capable of being cross-connected to provide multiple configurations. In single pump alignment, each pump will supply 100 gpm at a system pressure of 1,000 psig.

Given the following information:

Centrifugal Pumps

Shutoff head = 1,500 psig
Maximum design pressure = 2,000 psig
Flow rate with no backpressure = 180 gpm

Positive Displacement Pumps

Maximum design pressure = 2,000 psig

Which one of the following pump configurations will supply the lowest makeup water flow rate to the system if system pressure is 1,700 psig?

A. Two CPs in series

B. Two CPs in parallel

C. One PDP and one CP in series (CP supplying PDP)

D. One PDP and one CP in parallel

ANSWER: B.

TOPIC: 293006
KNOWLEDGE: K1.13 [2.6/2.7]
QID: B1780 (P1724)

Refer to the drawing of four sets of centrifugal pump and system operating curves (see figure below). Each set of curves shows the results of a change in pump and/or system operating conditions.

Initially, a centrifugal pump is operating in a closed water system and discharging through a single heat exchanger. A second heat exchanger is then placed in service in parallel with the first.

Which set of operating curves depicts the "before" and "after" conditions described above?

A. 1.

B. 2.

C. 3.

D. 4.

ANSWER: D.

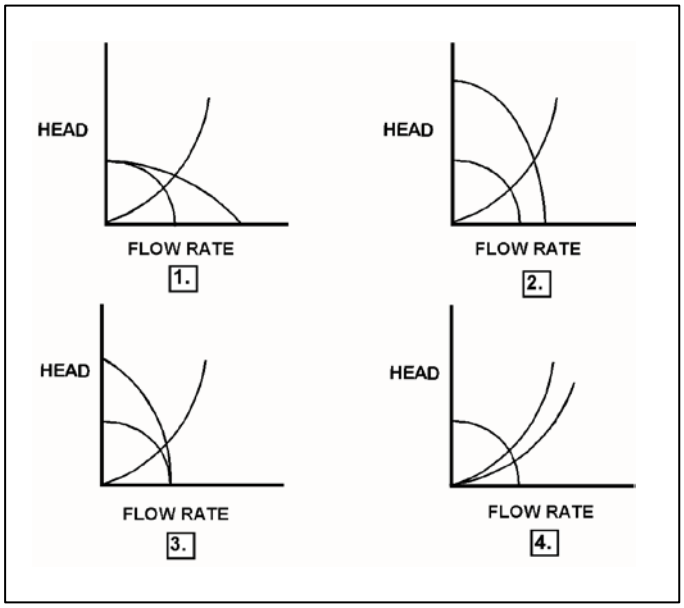

TOPIC: 293006
KNOWLEDGE: K1.13 [2.6/2.7]
QID: B1878 (P1324)

Refer to the drawing of four sets of centrifugal pump and system operating curves (see figure below). Each set of curves shows the results of a change in pump and/or system operating conditions.

Initially, a single centrifugal pump is operating in a cooling water system. Another identical centrifugal pump is then started in series with the first.

Which set of operating curves depicts the "before" and "after" conditions described above?

A. 1.

B. 2.

C. 3.

D. 4.

ANSWER: C.

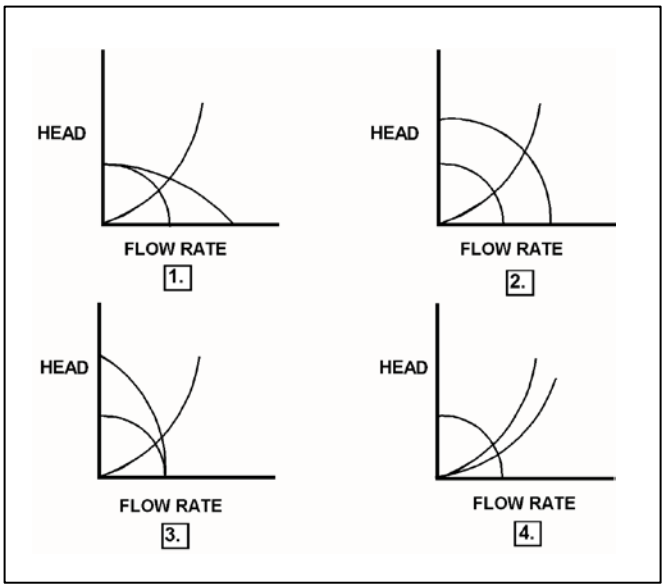

TOPIC: 293006
KNOWLEDGE: K1.13 [2.6/2.7]
QID: B2279 (P1524)

Refer to the drawing of four sets of centrifugal pump and system operating curves (see figure below). Each set of curves shows the results of a change in pump and/or system operating conditions.

Two identical constant-speed centrifugal pumps are operating in parallel in a closed system when one pump trips.

Which set of operating curves depicts the "before" and "after" conditions described above?

A. 1.

B. 2.

C. 3.

D. 4.

ANSWER: A.

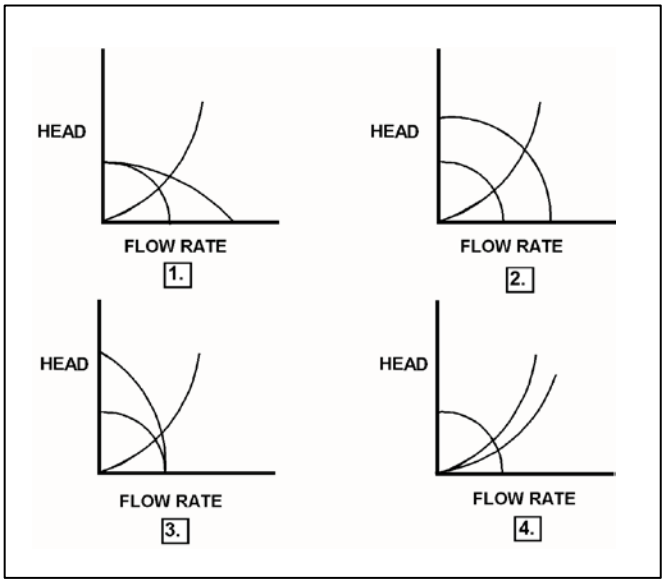

TOPIC: 293006
KNOWLEDGE: K1.13 [2.6/2.7]
QID: B2324 (P2383)

Two identical centrifugal pumps (CPs) and two identical positive displacement pumps (PDPs) are able to take suction on a vented water storage tank and provide makeup water flow to a cooling water system. The pumps are capable of being cross-connected to provide multiple configurations. In single pump alignment, each pump will supply 100 gpm at a system pressure of 1,200 psig.

Given the following information:

Centrifugal Pumps

Shutoff head = 1,500 psig
Maximum design pressure = 2,000 psig
Flow rate with no backpressure = 180 gpm

Positive Displacement Pumps

Maximum design pressure = 2,000 psig

Which one of the following pump configurations will supply the highest makeup flow rate to the system if system pressure is 500 psig?

A. Two CPs in series

B. Two CPs in parallel

C. Two PDPs in parallel

D. One CP and one PDP in series (CP supplying PDP)

ANSWER: B.

TOPIC: 293006
KNOWLEDGE: K1.13 [2.6/2.7]
QID: B2723 (P2783)

Two identical centrifugal pumps (CPs) and two identical positive displacement pumps (PDPs) are able to take suction on a vented water storage tank and provide makeup water flow to a cooling water system. The pumps are capable of being cross-connected to provide multiple configurations. In single pump alignment, each pump will supply 100 gpm at a system pressure of 1,200 psig.

Given the following information:

Centrifugal Pumps

Shutoff head = 1,500 psig
Maximum design pressure = 2,000 psig
Flow rate with no backpressure = 180 gpm

Positive Displacement Pumps

Maximum design pressure = 2,000 psig

Which one of the following pump configurations will supply the highest makeup flow rate to the cooling water system if system pressure is 1,700 psig?

A. Two CPs in series

B. Two CPs in parallel

C. Two PDPs in parallel

D. One CP and one PDP in series (CP supplying PDP)

ANSWER: C.

TOPIC: 293006
KNOWLEDGE: K1.13 [2.6/2.7]
QID: B2879 (P2823)

Refer to the drawing of four sets of centrifugal pump and system operating curves (see figure below). Each set of curves shows the results of a change in pump and/or system operating conditions.

Initially, a two-speed centrifugal pump is operating at low speed in a cooling water system and discharging through a heat exchanger. The pump is then switched to high speed.

Which set of operating curves depicts the "before" and "after" conditions described above?

A. 1.

B. 2.

C. 3.

D. 4.

ANSWER: B.

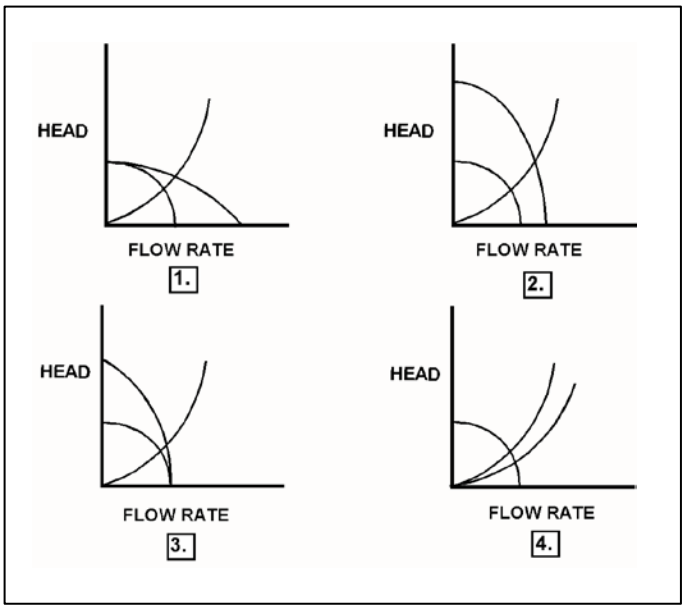

TOPIC: 293006
KNOWLEDGE: K1.13 [2.6/2.7]
QID: B3681 (P3683)

Two identical single-speed centrifugal pumps (CPs) and two identical single-speed positive displacement pumps (PDPs) are able to take suction on a vented water storage tank and provide makeup water flow to a cooling water system. The pumps are capable of being cross-connected to provide multiple configurations. In single pump alignment, each pump will supply 100 gpm at a system pressure of 1,200 psig.

Given the following information:

Centrifugal Pumps

Discharge pressure at shutoff head = 1,500 psig
Maximum design pressure = 2,000 psig
Flow rate with no backpressure = 180 gpm

Positive Displacement Pumps

Maximum design pressure = 2,000 psig

Which one of the following pump configurations will supply the highest initial flow rate to a cooling water system that is drained and depressurized?

A. Two CPs in series

B. Two CPs in parallel

C. Two PDPs in parallel

D. One CP and one PDP in series (CP supplying PDP)

ANSWER: B.

TOPIC: 293006
KNOWLEDGE: K1.13 [2.6/2.7]
QID: B4342 (P4343)

Two identical single-speed centrifugal pumps (CPs) and two identical single-speed positive displacement pumps (PDPs) are able to take suction on a vented water storage tank and provide makeup water flow to a cooling water system. The pumps are capable of being cross-connected to provide multiple configurations. In single pump alignment, each pump will supply 100 gpm at a system pressure of 1,200 psig.

Given the following information:

Centrifugal Pumps

Discharge pressure at shutoff head = 1,500 psig
Maximum design pressure = 2,000 psig
Flow rate with no backpressure = 180 gpm

Positive Displacement Pumps

Maximum design pressure = 2,000 psig

Which one of the following pump configurations will supply the lowest initial flow rate of makeup water to a cooling water system that is drained and depressurized?

A. Two CPs in series

B. Two CPs in parallel

C. Two PDPs in parallel

D. One CP and one PDP in series (CP supplying PDP)

ANSWER: D.

TOPIC: 293006
KNOWLEDGE: K1.19 [2.7/2.9]
QID: B1181 (P1222)

A nuclear power plant is operating at full power when a 200 gpm reactor coolant leak occurs, which results in a reactor scram and initiation of emergency coolant injection. Reactor vessel pressure stabilizes at 900 psia. All centrifugal injection pumps are operating with all pump miniflow paths isolated. The shutoff heads for the pumps are as follows:

High pressure coolant injection (HPCI) pumps = 1,200 psia
Low pressure coolant injection (LPCI) pumps = 200 psia

If the injection pumps continue operating under these conditions, which pumps are more likely to fail, and why?

A. LPCI pumps, due to pump overheating.

B. LPCI pumps, due to motor overheating.

C. HPCI pumps, due to pump overheating.

D. HPCI pumps, due to motor overheating.

ANSWER: A.

TOPIC: 293006
KNOWLEDGE: K1.19 [2.7/2.9]
QID: B3281

A nuclear power plant is operating at 100 percent power when a 200 gpm reactor vessel leak occurs, which results in a reactor scram and initiation of emergency coolant injection. Reactor vessel pressure stabilizes at 900 psia. All centrifugal injection pumps are operating with all pump miniflow paths isolated. The shutoff heads for the pumps are as follows:

High pressure coolant injection (HPCI) pumps = 800 psia
Low pressure coolant injection (LPCI) pumps = 200 psia

If the injection pumps continue operating under these conditions, which pumps are likely to fail, and why?

A. Only the LPCI pumps, due to pump overheating.

B. All LPCI and HPCI pumps, due to pump overheating.

C. Only the HPCI pumps, due to motor overheating.

D. All LPCI and HPCI pumps, due to motor overheating.

ANSWER: B.

TOPIC: 293006
KNOWLEDGE: K1.21 [2.4/2.6]
QID: B1980

A reactor heatup is in progress. Which one of the following reactor temperatures will result in a main steam line pressure of approximately 530 psig?

A. 462°F

B. 468°F

C. 476°F

D. 484°F

ANSWER: C.

TOPIC: 293006
KNOWLEDGE: K1.29 [2.6/2.7]
QID: B383 (P380)

An 85 gpm leak to atmosphere has developed from a cooling water system that is operating at 100 psig. Which one of the following will be the approximate leak rate when system pressure has decreased to 50 psig?

A. 33 gpm

B. 41 gpm

C. 52 gpm

D. 60 gpm

ANSWER: D.

TOPIC: 293006
KNOWLEDGE: K1.29 [2.6/2.7]
QID: B681 (P680)

A 55 gpm leak to atmosphere has developed from a cooling water system that is operating at 100 psig. Which one of the following will be the approximate leak rate when system pressure has decreased to 50 psig?

A. 28 gpm

B. 32 gpm

C. 39 gpm

D. 45 gpm

ANSWER: C.

TOPIC: 293006
KNOWLEDGE: K1.29 [2.6/2.7]
QID: B1783 (P1779)

A 100 gpm leak to atmosphere has developed from a cooling water system that is operating at 45 psig. Which one of the following will be the approximate leak rate when system pressure has decreased to 30 psig?

A. 25 gpm

B. 50 gpm

C. 67 gpm

D. 82 gpm

ANSWER: D.

TOPIC: 293006
KNOWLEDGE: K1.29 [2.6/2.7]
QID: B1979 (P1580)

A 60 gpm leak to atmosphere has developed from a cooling water system that is operating at 150 psig. Which one of the following will be the approximate leak rate when system pressure has decreased to 75 psig?

A. 15 gpm

B. 30 gpm

C. 42 gpm

D. 53 gpm

ANSWER: C.

TOPIC: 293006
KNOWLEDGE: K1.29 [2.6/2.7]
QID: B2080 (P2080)

An 80 gpm leak to atmosphere has developed from a cooling water system that is operating at 100 psig. Which one of the following will be the approximate leak rate when system pressure has decreased to 75 psig?

A. 69 gpm

B. 60 gpm

C. 51 gpm

D. 40 gpm

ANSWER: A.

TOPIC: 293006
KNOWLEDGE: K1.29 [2.6/2.7]
QID: B2281 (P2282)

Water at 90°F and 50 psig is flowing through a 10-inch diameter pipe at 100 lbm/sec. The pipe then splits into two pipes, a 4-inch diameter pipe and an 8-inch diameter pipe.

Disregarding any flow restrictions other than pipe size, which one of the following lists the approximate flow rates through the 4-inch and 8-inch diameter pipes? (Assume that water velocity is the same in each pipe.)

	4-inch Pipe (lbm/sec)	8-inch Pipe (lbm/sec)
A.	20	80
B.	25	75
C.	30	70
D.	33	67

ANSWER: A.

TOPIC: 293006
KNOWLEDGE: K1.29 [2.6/2.7]
QID: B2381 (P2379)

A 60 gpm leak to atmosphere has developed from a cooling water system that is operating at 150 psig. Which one of the following will be the approximate leak rate when system pressure has decreased to 100 psig?

A. 27 gpm

B. 35 gpm

C. 40 gpm

D. 49 gpm

ANSWER: D.

TOPIC: 293006
KNOWLEDGE: K1.29 [2.6/2.7]
QID: B2479 (P2481)

Water at 90°F and 50 psig is flowing through a 10-inch diameter pipe at 100 lbm/sec. The pipe then splits into two pipes, a 3-inch diameter pipe and a 6-inch diameter pipe.

Disregarding any flow restrictions other than pipe size, which one of the following lists the approximate flow rates through the 3-inch and 6-inch diameter pipes. (Assume that water velocity is the same in each pipe.)

	3-inch Pipe (lbm/sec)	6-inch Pipe (lbm/sec)
A.	10	90
B.	20	80
C.	25	75
D.	33	67

ANSWER: B.

TOPIC: 293006
KNOWLEDGE: K1.29 [2.6/2.7]
QID: B2581 (P2582)

Water at 90°F and 50 psig is flowing through a 10-inch diameter pipe at 100 lbm/sec. The pipe then splits into two pipes, a 6-inch diameter pipe and an 8-inch diameter pipe.

Disregarding any flow restrictions other than pipe size, which one of the following lists the approximate flow rates through the 6-inch and 8-inch diameter pipes? (Assume that water velocity is the same in each pipe.)

	6-inch Pipe (lbm/sec)	8-inch Pipe (lbm/sec)
A.	24	76
B.	32	68
C.	36	64
D.	40	60

ANSWER: C.

TOPIC: 293006
KNOWLEDGE: K1.29 [2.6/2.7]
QID: B2781 (P2779)

An 80 gpm leak to atmosphere has developed from a cooling water system that is operating at 150 psig. Which one of the following will be the approximate leak rate when system pressure has decreased to 75 psig?

A. 20 gpm

B. 40 gpm

C. 49 gpm

D. 57 gpm

ANSWER: D.

TOPIC: 293006
KNOWLEDGE: K1.29 [2.6/2.7]
QID: B2981 (P1679)

A 100 gpm leak to atmosphere has developed from a cooling water system that is operating at 60 psig. Which one of the following will be the approximate leak rate when system pressure has decreased to 20 psig?

A. 33 gpm

B. 53 gpm

C. 58 gpm

D. 71 gpm

ANSWER: C.

TOPIC: 293006
KNOWLEDGE: K1.29 [2.6/2.7]
QID: B3181 (P3080)

A 75 gpm leak to atmosphere has developed from a cooling water system that is operating at 100 psig. Which one of the following will be the approximate leak rate when system pressure has decreased to 80 psig?

A. 26 gpm

B. 39 gpm

C. 56 gpm

D. 67 gpm

ANSWER: D.

TOPIC: 293006
KNOWLEDGE: K1.29 [2.6/2.7]
QID: B3581

A reactor shutdown will be performed because of leakage from the main condenser cooling water system into the main condenser through a failed tube.

Given the following initial conditions:

- Main condenser pressure is 1.0 psia.
- Atmospheric pressure is 15 psia.
- Main condenser cooling water pressure at the location of the tube leak is 10 psig.
- Cooling water leak rate into the main condenser is 100 gpm.

If the main condenser is brought to atmospheric pressure, with no changes to the main condenser cooling water system parameters, what will be the approximate rate of cooling water leakage into the main condenser?

A. 17 gpm

B. 28 gpm

C. 42 gpm

D. 65 gpm

ANSWER: D.

TOPIC: 293006 (Also 291002K1.01)
KNOWLEDGE: K1.29 [2.6/2.7]
QID: B4242 (P4243)

Refer to the drawing of a venturi in a main steam line (see figure below). The venturi inlet and outlet pipe diameters are equal.

A main steam line break downstream of the venturi causes the main steam mass flow rate through the venturi to increase. Soon, the steam reaches sonic velocity in the throat of the venturi.

How will the main steam mass flow rate through the venturi be affected as the steam pressure downstream of the venturi continues to decrease?

A. It will continue to increase at a rate that is dependent on the steam velocity in the throat of the venturi.

B. It will continue to increase at a rate that is dependent on the differential pressure (P1 - P2) across the venturi.

C. It will <u>not</u> continue to increase because the steam velocity <u>cannot</u> increase above sonic velocity in the throat of the venturi.

D. It will <u>not</u> continue to increase because the differential pressure (P1 - P2) across the venturi <u>cannot</u> increase further once the steam reaches sonic velocity in the throat of the venturi.

ANSWER: C.

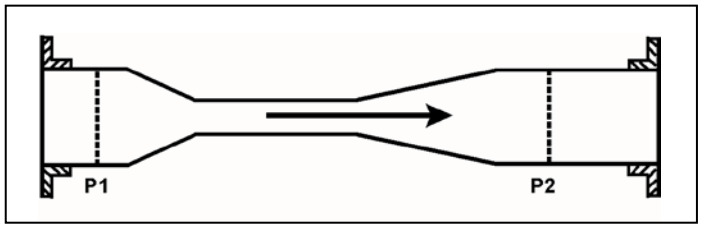

TOPIC: 293006
KNOWLEDGE: K1.29 [2.6/2.7]
QID: B4542 (P4543)

Refer to the drawing of a main water header that splits into two parallel headers (see figure below).

Header A has a 2-inch diameter and header B has a 3-inch diameter. The velocity of the water in both headers is the same.

If the main water header has a flow rate of 500 gpm, what is the approximate flow rate in each of the parallel headers?

	Header A (gpm)	Header B (gpm)
A.	125	375
B.	154	346
C.	200	300
D.	222	278

ANSWER: B.

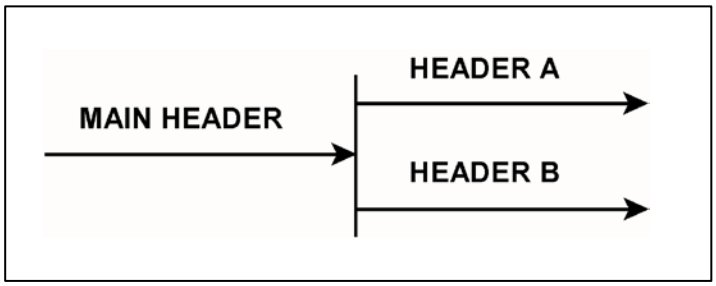

TOPIC: 293006
KNOWLEDGE: K1.29 [2.6/2.7]
QID: B4642 (P4643)

A length of pipe in a cooling water system uses a reducer fitting to decrease the pipe diameter from 6 inches to 4 inches. The flow rate in the 6-inch diameter section of pipe is 200 gpm. What is the flow rate in the 4-inch diameter section of pipe?

A. 133 gpm

B. 200 gpm

C. 300 gpm

D. 450 gpm

ANSWER: B.

TOPIC: 293006
KNOWLEDGE: K1.29 [2.6/2.7]
QID: B5342 (P5342)

A heat exchanger has the following <u>initial</u> cooling water inlet temperature and differential pressure (ΔP) parameters:

Inlet Temperature = 70°F
Heat Exchanger ΔP = 10 psi

Six hours later, the <u>current</u> heat exchanger cooling water parameters are:

Inlet Temperature = 85°F
Heat Exchanger ΔP = 10 psi

In comparison to the initial cooling water mass flow rate, the current mass flow rate is...

A. lower, because the density of the cooling water has decreased.

B. higher, because the velocity of the cooling water has increased.

C. the same, because the changes in cooling water velocity and density offset.

D. the same, because the heat exchanger cooling water ΔP is the same.

ANSWER: A.

TOPIC: 293006
KNOWLEDGE: K1.29 [2.6/2.7]
QID: B5542 (P5543)

A vented water storage tank contains 60 feet of water at 70°F. A cracked weld at the bottom of the tank results in a leak rate of 12 gpm. If makeup water flow rate is 5 gpm, at what water level will the tank stabilize?

A. 38.7 feet

B. 25.0 feet

C. 10.4 feet

D. 0.0 feet

ANSWER: C.

TOPIC: 293006
KNOWLEDGE: K1.29 [2.6/2.7]
QID: B5942 (P5943)

A vented water storage tank contains 64 feet of water at 70°F. A cracked weld at the bottom of the tank results in a leak rate of 12 gpm. At what water level will the leak rate be 3 gpm?

A. 48 feet

B. 32 feet

C. 16 feet

D. 4 feet

ANSWER: D.

TOPIC: 293006
KNOWLEDGE: K1.29 [2.6/2.7]
QID: B6142 (P6143)

A plant shutdown will be performed because of leakage from the main condenser cooling water system into the main condenser via a tube leak.

Given the following initial conditions:

- Main condenser pressure is 1.7 psia.
- Atmospheric pressure is 14.7 psia
- Main condenser cooling water pressure at the location of the tube leak is 18 psig.
- Cooling water leak rate into the main condenser is 80 gpm.

If the main condenser is brought to atmospheric pressure, with no changes to the main condenser cooling water system parameters, what will be the approximate rate of cooling water leakage into the main condenser?

A. 36 gpm

B. 52 gpm

C. 61 gpm

D. 72 gpm

ANSWER: C.

TOPIC: 293006
KNOWLEDGE: K1.29 [2.6/2.7]
QID: B6542 (P6543)

An ideal positive displacement pump is operating in an open system with the following initial parameters:

Suction pressure = 10 psig
Discharge pressure = 25 psig
Flow rate = 100 gpm

If the pump discharge valve is throttled such that pump discharge pressure increases to 40 psig, the pump flow rate will...

A. remain constant.

B. decrease in direct proportion to the change in pump differential pressure.

C. decrease in direct proportion to the square of the change in pump differential pressure.

D. decrease in direct proportion to the square root of the change in pump differential pressure.

ANSWER: A.

TOPIC: 293006
KNOWLEDGE: K1.29 [2.6/2.7]
QID: B6742 (P6743)

A centrifugal pump is operating at a constant speed in a closed system with the following initial parameters:

Suction pressure = 10 psig
Discharge pressure = 25 psig
Pump flow rate = 500 gpm

If the pump discharge flow control valve is throttled such that the pump discharge pressure increases to 40 psig, the change in pump flow rate will be...

A. directly proportional to the square of the change in pump differential pressure.

B. directly proportional to the square root of the change in pump differential pressure.

C. inversely proportional to the square root of the change in pump differential pressure.

D. impossible to determine from the provided information.

ANSWER: D.

TOPIC: 293006
KNOWLEDGE: K1.29 [2.6/2.7]
QID: B6842 (P6843)

Refer to the drawing of a venturi in a steam line (see figure below). The venturi inlet and outlet pipe diameters at P1 and P2 are equal.

Currently, steam is flowing through the venturi, reaching sonic velocity in the throat of the venturi. If the steam inlet pressure (P1) remains constant while the downstream pressure (P2) decreases, the mass flow rate of the steam will _____; and the velocity of the steam at the venturi outlet will _____.

A. increase; increase

B. increase; remain the same

C. remain the same; increase

D. remain the same; remain the same

ANSWER: C.

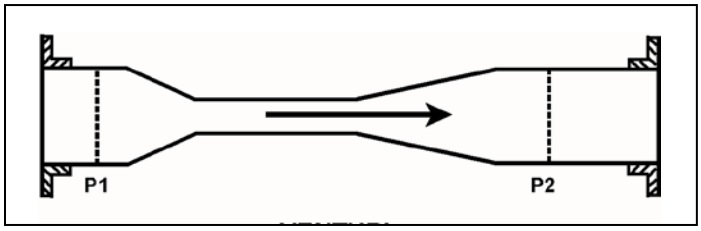

TOPIC: 293006
KNOWLEDGE: K1.29 [2.6/2.7]
QID: B7142

The following are current parameter values for an operating nuclear power plant:

Reactor vessel (RV) pressure = 1,000 psia
Main feed pump (MFP) discharge pressure = 1,220 psia

If RV pressure does not change, what MFP discharge pressure will increase main feedwater mass flow rate by 10 percent? (Assume MFP inlet temperature remains the same. Also, assume all valves/components that contribute to head loss downstream of the MFP remain in their current configuration.)

A. 1,242 psia

B. 1,266 psia

C. 1,293 psia

D. 1,342 psia

ANSWER: B.

TOPIC: 293006
KNOWLEDGE: K1.29 [2.6/2.7]
QID: B7342 (P7342)

An 80 gpm leak to atmosphere has developed from a cooling water system that is operating at 150 psig. Which one of the following will be the approximate leak rate when system pressure has decreased to 100 psig?

A. 70 gpm

B. 65 gpm

C. 53 gpm

D. 47 gpm

ANSWER: B.

TOPIC: 293007
KNOWLEDGE: K1.01 [3.2/3.2]
QID: B87

The dominant mode of heat transfer that occurs when film boiling is present is...

A. convection.

B. radiation.

C. conduction.

D. induction.

ANSWER: B.

TOPIC: 293007
KNOWLEDGE: K1.01 [3.2/3.2]
QID: B144

The heat transfer mode that uses direct contact transfer of kinetic energy from molecular motion is...

A. radiation.

B. convection.

C. transmission.

D. conduction.

ANSWER: D.

TOPIC: 293007
KNOWLEDGE: K1.01 [3.2/3.2]
QID: B188

Which one of the following methods of heat transfer is defined as the exchange of energy between bodies through an intervening space by means of electromagnetic waves?

A. Conduction

B. Convection

C. Electrokinetics

D. Radiation

ANSWER: D.

TOPIC: 293007
KNOWLEDGE: K1.01 [3.2/3.2]
QID: B285

The heat transfer mode that accounts for the <u>majority</u> of core heat removal during a loss of coolant accident after total core voiding is...

A. conduction.

B. convection.

C. radiolysis.

D. radiation.

ANSWER: D.

TOPIC: 293007
KNOWLEDGE: K1.01 [3.2/3.2]
QID: B482

The primary mode of heat transfer from the fuel cladding surface during steam blanketing conditions is...

A. radiation.

B. convection.

C. ionization.

D. conduction.

ANSWER: A.

TOPIC: 293007
KNOWLEDGE: K1.01 [3.2/3.2]
QID: B882 (P584)

Refer to the drawing of a fuel rod and coolant flow channel at the beginning of a fuel cycle (see figure below).

Which one of the following is the primary method of heat transfer through the gap between the fuel pellets and the fuel cladding?

A. Conduction

B. Convection

C. Radiation

D. Natural circulation

ANSWER: A.

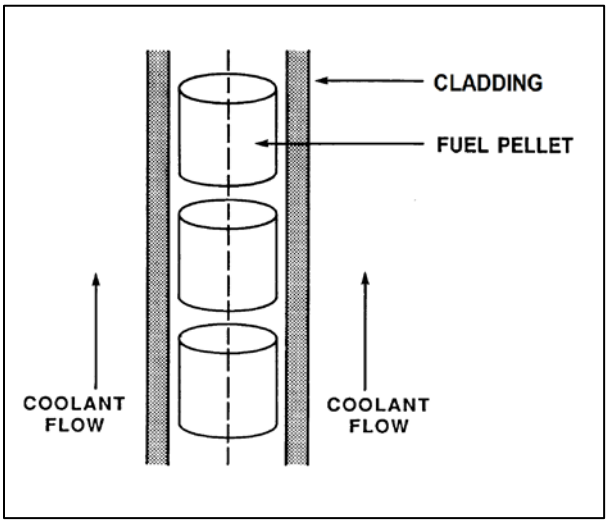

TOPIC: 293007
KNOWLEDGE: K1.01 [3.2/3.2]
QID: B1282

The dominant mode of heat transfer from the fuel-clad surface to the coolant during 100 percent power operation is...

A. radiation.

B. conduction.

C. forced convection.

D. natural convection.

ANSWER: C.

TOPIC: 293007
KNOWLEDGE: K1.01 [3.2/3.2]
QID: B1582

During nuclear power plant operation at 100 percent power, which one of the following is the major mode of heat transfer occurring as steam travels from the reactor vessel to the main turbine?

A. Radiolysis

B. Radiation

C. Conduction

D. Convection

ANSWER: D.

TOPIC: 293007
KNOWLEDGE: K1.01 [3.2/3.2]
QID: B1982 (P985)

Reactor fuel rods are normally charged with _____ gas; which improves heat transfer by _____.

A. helium; convection

B. helium; conduction

C. nitrogen; convection

D. nitrogen; conduction

ANSWER: B.

TOPIC: 293007
KNOWLEDGE: K1.01 [3.2/3.2]
QID: B2282

Which one of the following describes a heat transfer process in which convection is the dominant mode of heat transfer?

A. From the reactor fuel to the core barrel during core uncovery.

B. Through the tube walls in a main condenser during normal operation at 100 percent power.

C. From the reactor fuel to the steam outlet of the reactor vessel during a station blackout.

D. From the fuel pellet centerline to the fuel clad during normal operation at 100 percent power.

ANSWER: C.

TOPIC: 293007
KNOWLEDGE: K1.01 [3.2/3.2]
QID: B2882 (P2884)

Which one of the following describes a heat transfer flow path in which conduction is the dominant mode of heat transfer?

A. From the fuel rods to the core barrel during core uncovery.

B. From the main turbine exhaust steam to the atmosphere via main condenser cooling water and a cooling tower during normal operation.

C. From the fuel rods to the steam outlet of the reactor vessel during a station blackout.

D. From a fuel pellet to the fuel cladding via the fuel rod fill gas during normal operation.

ANSWER: D.

TOPIC: 293007
KNOWLEDGE: K1.02 [2.4/2.6]
QID: B1185

In an operating cooling water system, an increased stagnant fluid film thickness _____ heat transfer because conduction heat transfer is _____ efficient than convective heat transfer.

A. enhances; more

B. enhances; less

C. inhibits; more

D. inhibits; less

ANSWER: D.

TOPIC: 293007
KNOWLEDGE: K1.02 [2.4/2.6]
QID: B1682

The buildup of fission product gases in a fuel rod causes the thermal conductivity of the fuel pellets to _____ and the thermal conductivity of the fill gas to _____.

A. decrease; decrease

B. decrease; increase

C. increase; decrease

D. increase; increase

ANSWER: A.

TOPIC: 293007
KNOWLEDGE: K1.02 [2.4/2.6]
QID: B2582

Which one of the following has the highest thermal conductivity value?

A. Fuel pellet

B. Fuel clad

C. Fuel rod fill gas

D. Fission product gases

ANSWER: B.

TOPIC: 293007
KNOWLEDGE: K1.03 [2.7/2.8]
QID: B86

The order of reactor coolant heat transfer modes, from the most efficient to the least efficient, is...

A. nucleate boiling, transition boiling, stable film boiling.

B. stable film boiling, nucleate boiling, transition boiling.

C. nucleate boiling, stable film boiling, transition boiling.

D. stable film boiling, transition boiling, nucleate boiling.

ANSWER: A.

TOPIC: 293007
KNOWLEDGE: K1.03 [2.7/2.8]
QID: B286

As fluid flow rate decreases through the tubes of a shell-and-tube heat exchanger, the laminar film thickness _____, which causes the heat transfer rate to _____.

A. increases; decrease

B. increases; increase

C. decreases; decrease

D. decreases; increase

ANSWER: A.

TOPIC: 293007
KNOWLEDGE: K1.03 [2.7/2.8]
QID: B1483

Which one of the following is the order of reactor coolant heat transfer modes, from the least efficient to the most efficient?

A. Film boiling, single-phase convection, nucleate boiling

B. Film boiling, nucleate boiling, single-phase convection

C. Single-phase convection, nucleate boiling, film boiling

D. Single-phase convection, film boiling, nucleate boiling

ANSWER: A.

TOPIC: 293007
KNOWLEDGE: K1.03 [2.7/2.8]
QID: B2782

The order of reactor coolant heat transfer modes, from the least efficient to the most efficient, is...

A. transition boiling, stable film boiling, nucleate boiling.

B. transition boiling, nucleate boiling, stable film boiling.

C. stable film boiling, nucleate boiling, transition boiling.

D. stable film boiling, transition boiling, nucleate boiling.

ANSWER: D.

TOPIC: 293007
KNOWLEDGE: K1.06 [2.7/2.8]
QID: B149

Which one of the following describes parallel and/or counter-flow heat exchangers?

A. Counter-flow heat exchangers are more efficient than parallel-flow heat exchangers due to the high initial ΔT.

B. Counter-flow heat exchangers allow the exiting cooled fluid temperature to be below the exiting cooling fluid temperature.

C. Parallel-flow heat exchangers are more efficient than counter-flow heat exchangers due to the high initial ΔT.

D. Parallel-flow heat exchangers allow the exiting cooled fluid temperature to be below the exiting cooling fluid temperature.

ANSWER: B.

TOPIC: 293007
KNOWLEDGE: K1.06 [2.7/2.8]
QID: B199

Which one of the following equations is representative of the heat transfer rate across the tubes of a heat exchanger?

Where:

h_t = fluid enthalpy inside tubes
h_{ss} = fluid enthalpy on heat exchanger shell side
T_t = fluid temperature inside tubes
T_{ss} = fluid temperature on heat exchanger shell side

A. $\dot{Q} = \dot{m}c_p(h_t - h_{ss})$

B. $\dot{Q} = UA(h_t - h_{ss})$

C. $\dot{Q} = \dot{m}c_p(T_t - T_{ss})$

D. $\dot{Q} = UA(T_t - T_{ss})$

ANSWER: D.

TOPIC: 293007
KNOWLEDGE: K1.06 [2.7/2.8]
QID: B1083

A counterflow lube oil heat exchanger is in operation when the cooling water flow rate is reduced to one-half of its original value. Which one of the following will decrease as a result?

A. Lube oil outlet temperature

B. Cooling water outlet temperature

C. Lube oil differential temperature

D. Cooling water differential temperature

ANSWER: C.

TOPIC: 293007
KNOWLEDGE: K1.06 [2.7/2.8]
QID: B1283

Which one of the following equations includes the heat transfer coefficient of the tubes in a heat exchanger?

A. $\dot{Q} = \dot{m}\Delta h$

B. $\dot{Q} = \dot{m}\Delta T$

C. $\dot{Q} = \dot{m}c_p\Delta T$

D. $\dot{Q} = UA\Delta T$

ANSWER: D.

TOPIC: 293007
KNOWLEDGE: K1.06 [2.7/2.8]
QID: B1782

Refer to the drawing of a lube oil heat exchanger (see figure below).

The lube oil heat exchanger is in operation when the cooling water flow rate is increased to twice its former value. Which one of the following will increase as a result?

A. Lube oil outlet temperature

B. Cooling water outlet temperature

C. Lube oil differential temperature

D. Cooling water differential temperature

ANSWER: C.

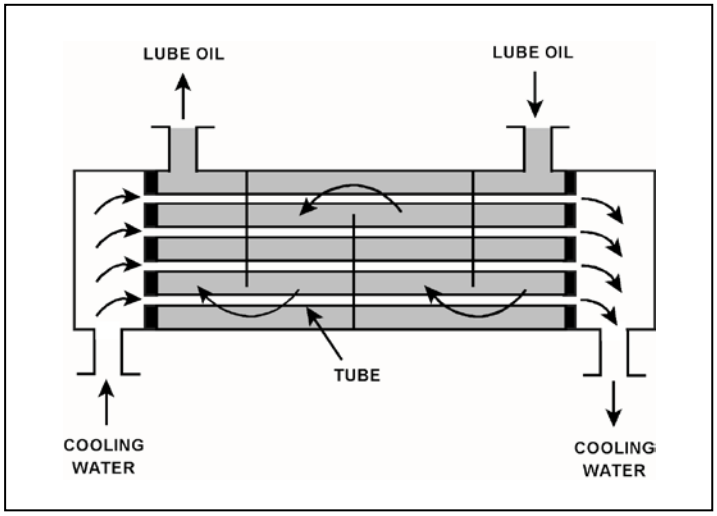

TOPIC: 293007
KNOWLEDGE: K1.06 [2.7/2.8]
QID: B2583

During a nuclear power plant outage, 6 percent of the main condenser tubes were plugged. The following 100 percent power conditions existed before the outage:

Main condenser pressure	=	1.1 psia
Cooling water inlet temperature	=	60°F
Cooling water outlet temperature	=	86°F

After the outage, the plant was returned to 100 percent power. The following 100 percent power conditions existed after the outage:

Main condenser pressure	=	1.2 psia
Cooling water inlet temperature	=	60°F
Cooling water outlet temperature	=	?

If the total heat transfer rate in the main condenser is the same, which one of the following will be the approximate final cooling water outlet temperature?

A. 86°F

B. 88°F

C. 90°F

D. 92°F

ANSWER: B.

TOPIC: 293007
KNOWLEDGE: K1.06 [2.7/2.8]
QID: B3082 (P3034)

Refer to the drawing of a lube oil heat exchanger (see figure below).

Given the following heat exchanger parameters:

- Lube oil flow rate is 200 lbm/min.
- Lube oil enters the heat exchanger at 140°F.
- Lube oil leaves the heat exchanger at 100°F.
- Specific heat of the lube oil is 0.8 Btu/lbm-°F.
- Cooling water flow rate is 400 lbm/min.
- Cooling water enters the lube oil heat exchanger at 60°F.
- Specific heat of the cooling water is 1.0 Btu/lbm-°F.

What is the approximate temperature of the cooling water leaving the lube heat exchanger?

A. 76°F

B. 85°F

C. 92°F

D. 124°F

ANSWER: A.

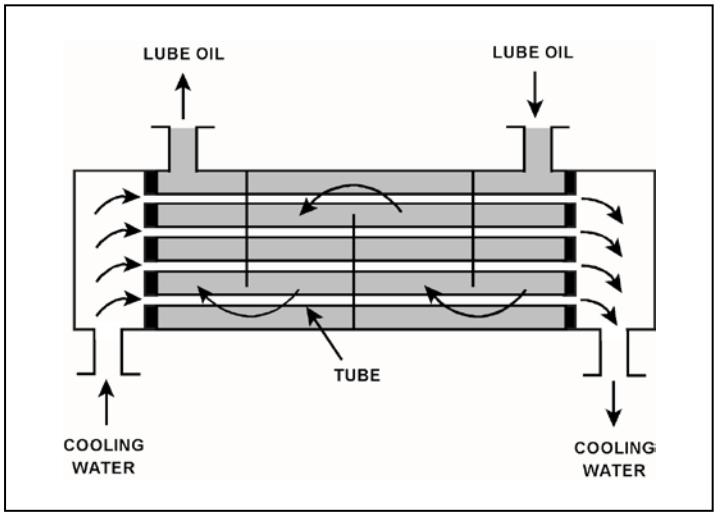

TOPIC: 293007
KNOWLEDGE: K1.06 [2.7/2.8]
QID: B6143 (P6116)

A counter-flow heat exchanger is being used to cool the lube oil for a main turbine and generator.

The main turbine and generator was initially operating at 100 percent load with the following stable heat exchanger conditions:

$T_{oil\ in}$ = 174°F
$T_{oil\ out}$ = 114°F
$T_{water\ in}$ = 85°F
$T_{water\ out}$ = 115°F

Main turbine and generator load was reduced, and the heat exchanger cooling water mass flow rate was decreased to one-half of its initial value, resulting in the following stable current conditions:

$T_{oil\ in}$ = 178°F
$T_{oil\ out}$ = 138°F
$T_{water\ in}$ = 85°F
$T_{water\ out}$ = ?

Assume that the lube oil mass flow rate and the specific heats of both fluids did <u>not</u> change.

Which one of the following is the current cooling water outlet temperature?

A. 115°F

B. 125°F

C. 135°F

D. 145°F

ANSWER: B.

TOPIC: 293007
KNOWLEDGE: K1.07 [2.7/2.9]
QID: B484

Excessive amounts of entrained gases passing through a single-phase (liquid) heat exchanger are undesirable because...

A. flow blockage can occur in the heat exchanger.

B. the laminar layer will increase in the heat exchanger.

C. the heat exchanger heat transfer coefficient will increase.

D. the temperature difference across the heat exchanger tubes will decrease.

ANSWER: A.

TOPIC: 293007
KNOWLEDGE: K1.07 [2.7/2.9]
QID: B1882 (P1184)

Why is bulk boiling in the tubes of a single-phase heat exchanger undesirable?

A. The bubble formation will break up the laminar layer in the heat exchanger tubes.

B. The thermal conductivity of the heat exchanger tubes will decrease.

C. The differential temperature across the tubes will decrease through the heat exchanger.

D. The turbulence will restrict fluid flow through the heat exchanger tubes.

ANSWER: D.

TOPIC: 293007
KNOWLEDGE: K1.07 [2.7/2.9]
QID: B2184 (P2184)

Which one of the following pairs of fluids undergoing heat transfer in similar cross-flow heat exchangers will yield the greatest heat exchanger overall heat transfer coefficient? (Assume comparable heat exchanger sizes and fluid flow rates.)

A. Oil to water in a lube oil cooler.

B. Air to water in an air compressor after-cooler.

C. Steam to water in a turbine exhaust steam condenser.

D. Water to water in a cooling water heat exchanger.

ANSWER: C.

TOPIC: 293007
KNOWLEDGE: K1.07 [2.7/2.9]
QID: B2383 (P2384)

Which one of the following pairs of fluids undergoing heat transfer in similar cross-flow design heat exchangers will yield the smallest heat exchanger overall heat transfer coefficient? (Assume comparable heat exchanger sizes and fluid flow rates.)

A. Oil to water in a lube oil cooler.

B. Air to water in an air compressor after-cooler.

C. Steam to water in a turbine exhaust steam condenser.

D. Water to water in a cooling water heat exchanger.

ANSWER: B.

TOPIC: 293007
KNOWLEDGE: K1.07 [2.7/2.9]
QID: B3084 (P3084)

A nuclear power plant is operating near 100 percent power. Main turbine extraction steam is being supplied to a feedwater heater. Extraction steam parameters are as follows:

Steam pressure = 414 psia
Steam flow rate = 7.5×10^5 lbm/hr
Steam enthalpy = 1,150 Btu/lbm

The extraction steam condenses to saturated water at 414 psia, and then leaves the feedwater heater via a drain line.

What is the heat transfer rate from the extraction steam to the feedwater in the feedwater heater?

A. 3.8×10^7 Btu/hr

B. 8.6×10^7 Btu/hr

C. 5.4×10^8 Btu/hr

D. 7.2×10^8 Btu/hr

ANSWER: C.

TOPIC: 293007
KNOWLEDGE: K1.07 [2.7/2.9]
QID: B3383 (P3384)

A nuclear power plant is initially operating at a steady-state power level with the following main condenser parameters:

Main condenser pressure = 1.2 psia
Cooling water inlet temperature = 60°F
Cooling water outlet temperature = 84°F

Due to increased condenser air inleakage, the overall heat transfer coefficient of the main condenser decreases by 25 percent. Main condenser heat transfer rate and cooling water temperatures are unchanged. Which one of the following is the steady-state main condenser pressure resulting from the reduced heat transfer coefficient?

A. 1.7 psia

B. 2.3 psia

C. 3.0 psia

D. 4.6 psia

ANSWER: A.

TOPIC: 293007
KNOWLEDGE: K1.07 [2.7/2.9]
QID: B3684 (P3684)

Which one of the following pairs of fluids undergoing heat transfer in similar cross-flow design heat exchangers will yield the <u>greatest</u> heat exchanger overall heat transfer coefficient? (Assume comparable heat exchanger sizes and fluid flow rates.)

A. Oil to water in a lube oil cooler.

B. Steam to water in a feedwater heater.

C. Water to air in a ventilation cooling unit.

D. Water to water in a cooling water heat exchanger.

ANSWER: B.

TOPIC: 293007
KNOWLEDGE: K1.07 [2.7/2.9]
QID: B5143 (P5144)

A nuclear power plant is operating near 100 percent power. Main turbine extraction steam is being supplied to a feedwater heater. Extraction steam parameters are as follows:

Steam pressure = 500 psia
Steam flow rate = 7.0×10^5 lbm/hr
Steam enthalpy = 1,135 Btu/lbm

The extraction steam condenses to saturated water at 500 psia, and then leaves the feedwater heater via a drain line.

What is the heat transfer rate from the extraction steam to the feedwater in the feedwater heater?

A. 3.2×10^8 Btu/hr

B. 4.8×10^8 Btu/hr

C. 5.3×10^8 Btu/hr

D. 7.9×10^8 Btu/hr

ANSWER: B.

TOPIC: 293007
KNOWLEDGE: K1.08 [3.0/3.1]
QID: B378

Which one of the following actions will <u>decrease</u> nuclear power plant efficiency?

A. Reducing the turbine inlet steam moisture content.

B. Reducing the condensate depression.

C. Increasing the turbine exhaust pressure.

D. Increasing the temperature of the feedwater entering the reactor vessel.

ANSWER: C.

TOPIC: 293007
KNOWLEDGE: K1.08 [3.0/3.1]
QID: B1585

Which one of the following actions will increase nuclear power plant efficiency?

A. Increasing the turbine inlet steam moisture content.

B. Increasing the condensate depression.

C. Decreasing the turbine exhaust pressure.

D. Decreasing the temperature of the feedwater entering the reactor vessel.

ANSWER: C.

TOPIC: 293007
KNOWLEDGE: K1.09 [2.5/2.7]
QID: B147

Which one of the following statements explains why condensate subcooling is necessary in the steam condensing phase of a nuclear power plant steam cycle?

A. To increase overall secondary efficiency.

B. To provide an improved condenser vacuum.

C. To allow use of a higher circulating water temperature.

D. To provide net positive suction head for the condensate pumps.

ANSWER: D.

TOPIC: 293007
KNOWLEDGE: K1.09 [2.5/2.7]
QID: B583

Which one of the following statements describes condensate depression in the main condenser?

A. Increasing condensate depression improves the available net positive suction head for the condensate pumps.

B. Decreasing condenser vacuum increases condensate depression.

C. Increasing circulating water temperature increases condensate depression.

D. Decreasing condensate depression decreases plant efficiency.

ANSWER: A.

TOPIC: 293007
KNOWLEDGE: K1.09 [2.5/2.7]
QID: B883

A steam condenser is operating with 28 inches of Hg vacuum and a condensate outlet temperature of 88°F. Which one of the following is the appropriate value of condensate depression?

A. 8°F

B. 14°F

C. 24°F

D. 38°F

ANSWER: B.

TOPIC: 293007
KNOWLEDGE: K1.09 [2.5/2.7]
QID: B1084

The purpose of condensate depression in a nuclear power plant steam cycle is to...

A. maximize condenser vacuum.

B. maximize total plant efficiency.

C. minimize cavitation of the condensate pumps.

D. minimize thermal gradients in the condenser hotwell.

ANSWER: C.

TOPIC: 293007
KNOWLEDGE: K1.09 [2.5/2.7]
QID: B2483

A steam condenser is operating with 28.5 inches of Hg vacuum and a condensate outlet temperature of 88°F. Which one of the following is the approximate value of condensate depression?

A. 2°F

B. 9°F

C. 13°F

D. 17°F

ANSWER: A.

TOPIC: 293007
KNOWLEDGE: K1.10 [2.7/2.9]
QID: B684

The measure of heat input per unit time from the nuclear fuel to the reactor coolant in units of megawatts defines...

A. specific heat.

B. power density.

C. core thermal power.

D. percent reactor power.

ANSWER: C.

TOPIC: 293007
KNOWLEDGE: K1.11 [2.6/3.1]
QID: B385

Which one of the following is the most accurate indication of mass flow rate through a reactor for calculating core thermal power during reactor power operation?

A. Core flow rate

B. Steam flow rate

C. The sum of feedwater and control rod drive flow rates

D. The sum of both recirculation loop flow rates

ANSWER: C.

TOPIC: 293007
KNOWLEDGE: K1.11 [2.6/3.1]
QID: B984

Which one of the following expressions describes core thermal power?

A. $\dot{Q}_{Core} = \dot{Q}_{Feedwater} - \dot{Q}_{Steam} - \dot{Q}_{CRD} - \dot{Q}_{Recirc} + \dot{Q}_{Ambient} + \dot{Q}_{RWCU}$

B. $\dot{Q}_{Core} = \dot{Q}_{Steam} - \dot{Q}_{Feedwater} + \dot{Q}_{CRD} + \dot{Q}_{Recirc} - \dot{Q}_{Ambient} - \dot{Q}_{RWCU}$

C. $\dot{Q}_{Core} = \dot{Q}_{Steam} - \dot{Q}_{Feedwater} - \dot{Q}_{CRD} - \dot{Q}_{Recirc} + \dot{Q}_{Ambient} + \dot{Q}_{RWCU}$

D. $\dot{Q}_{Core} = \dot{Q}_{Steam} - \dot{Q}_{Feedwater} - \dot{Q}_{CRD} - \dot{Q}_{Recirc} - \dot{Q}_{Ambient} - \dot{Q}_{RWCU}$

ANSWER: C.

TOPIC: 293007
KNOWLEDGE: K1.11 [2.6/3.1]
QID: B2984 (P2985)

A reactor is operating at power. The feedwater flow rate to the reactor vessel is 7.0×10^6 lbm/hr at a temperature of 440°F. The steam exiting the reactor vessel is at 1,000 psia with 100 percent steam quality.

Ignoring all other heat gain and loss mechanisms, what is the core thermal power?

A. 1,335 MW

B. 1,359 MW

C. 1,589 MW

D. 1,612 MW

ANSWER: C.

TOPIC: 293007
KNOWLEDGE: K1.11 [2.6/3.1]
QID: B6843

When performing a heat balance calculation to determine core thermal power, the measured thermal power is _____ by a value associated with the recirculation pumps; the adjustment is needed because _____ of the flow energy added to the reactor coolant by the recirculation pumps is converted to thermal energy of the reactor coolant.

A. increased; a small fraction

B. increased; nearly all

C. decreased; a small fraction

D. decreased; nearly all

ANSWER: D.

TOPIC: 293007
KNOWLEDGE: K1.12 [2.6/3.1]
QID: B1384

Given the following data for a steam condenser:

Total tube area	= 500,000 ft^2
Cooling water flow rate	= 200,000 gpm
Condenser pressure	= 1.0 psia
Specific heat of cooling water (c_p)	= 1.0 Btu/lbm-°F
Cooling water inlet temperature	= 60°F
Cooling water outlet temperature	= 80°F
Steam condensing rate	= 3,000,000 lbm/hr
Mass of cooling water	= 8.34 lbm/gal

What is the condenser heat load (MW)?

A. 587 MW

B. 629 MW

C. 671 MW

D. 733 MW

ANSWER: A.

TOPIC: 293007
KNOWLEDGE: K1.13 [2.3/2.9]
QID: B150

Given the following data for a steam condenser:

Total tube area	=	500,000 ft^2
Cooling water flow rate	=	200,000 gpm
Condenser pressure	=	1.0 psia
Specific heat of cooling water (c_p)	=	1.0 Btu/lbm-°F
Cooling water inlet temperature	=	60°F
Cooling water outlet temperature	=	85°F
Steam condensing rate	=	3,000,000 lbm/hr
Mass of cooling water	=	8.34 lbm/gal

What is the condenser heat load (MW)?

A. 704 MW

B. 734 MW

C. 784 MW

D. 834 MW

ANSWER: B.

TOPIC: 293007
KNOWLEDGE: K1.13 [2.3/2.9]
QID: B386 (P384)

The power range nuclear instruments have been adjusted to 100 percent based on a heat balance calculation. Which one of the following will result in indicated reactor power being greater than actual reactor power?

A. The feedwater temperature used in the heat balance calculation was higher than actual feedwater temperature.

B. The reactor recirculation pump heat input term was omitted from the heat balance calculation.

C. The feedwater flow rate used in the heat balance calculation was lower than actual feedwater flow rate.

D. The steam pressure used in the heat balance calculation was higher than actual steam pressure.

ANSWER: B.

TOPIC: 293007
KNOWLEDGE: K1.13 [2.3/2.9]
QID: B1684 (P3944)

The power range nuclear instruments have been adjusted to 100 percent based on a calculated heat balance. Which one of the following will result in indicated reactor power being lower than actual reactor power?

A. The feedwater temperature used in the heat balance calculation was 10°F lower than actual feedwater temperature.

B. The reactor recirculation pump heat input term was omitted from the heat balance calculation.

C. The feedwater flow rate used in the heat balance calculation was 10 percent lower than actual feedwater flow rate.

D. The steam pressure used in the heat balance calculation was 50 psi lower than actual steam pressure.

ANSWER: C.

TOPIC: 293007
KNOWLEDGE: K1.13 [2.3/2.9]
QID: B2183 (P2185)

The power range nuclear instruments have been adjusted to 100 percent based on a heat balance calculation. Which one of the following will result in indicated reactor power being lower than actual reactor power?

A. The feedwater temperature used in the heat balance calculation was 20°F higher than actual feedwater temperature.

B. The reactor recirculation pump heat input term was omitted from the heat balance calculation.

C. The feedwater flow rate used in the heat balance calculation was 10 percent higher than actual feedwater flow rate.

D. The steam pressure used in the heat balance calculation was 50 psi lower than actual steam pressure.

ANSWER: A.

TOPIC: 293007
KNOWLEDGE: K1.13 [2.3/2.9]
QID: B2284 (P2685)

The power range nuclear instruments have been adjusted to 100 percent based on a calculated heat balance. Which one of the following will result in indicated reactor power being lower than actual reactor power?

A. The feedwater temperature used in the heat balance calculation was 20°F higher than actual feedwater temperature.

B. The reactor recirculation pump heat input value used in the heat balance was 10 percent lower than actual reactor recirculation pump heat input.

C. The feedwater flow rate used in the heat balance calculation was 10 percent higher than actual feedwater flow rate.

D. The operator miscalculated the enthalpy of the steam exiting the reactor vessel to be 10 Btu/lbm higher than actual.

ANSWER: A.

TOPIC: 293007
KNOWLEDGE: K1.13 [2.3/2.9]
QID: B2484

The power range nuclear instruments have been adjusted to 100 percent based on a calculated heat balance. Which one of the following will result in indicated reactor power being lower than actual reactor power?

A. The feedwater temperature used in the heat balance calculation was 20°F lower than actual feedwater temperature.

B. The reactor recirculation pump heat input term was omitted from the heat balance calculation.

C. The ambient heat loss value used in the heat balance calculation was only half the actual ambient heat loss.

D. The feedwater flow rates used in the heat balance calculation were 10 percent higher than actual flow rates.

ANSWER: C.

TOPIC: 293007
KNOWLEDGE: K1.13 [2.3/2.9]
QID: B2684 (P2485)

The power range nuclear instruments have been adjusted to 100 percent based on a heat balance calculation. Which one of the following will result in indicated reactor power being higher than actual reactor power?

A. The feedwater temperature used in the heat balance calculation was 20°F higher than actual feedwater temperature.

B. The reactor recirculation pump heat input term was omitted from the heat balance calculation.

C. The feedwater flow rate used in the heat balance calculation was 10 percent lower than actual feedwater flow rate.

D. The ambient heat loss term was omitted from the heat balance calculation.

ANSWER: B.

TOPIC: 293007
KNOWLEDGE: K1.13 [2.3/2.9]
QID: B2785

The power range nuclear instruments have been adjusted to 100 percent based on a calculated heat balance. Which one of the following will result in indicated reactor power being lower than actual reactor power?

A. The reactor recirculation pump heat input term was omitted from the heat balance calculation.

B. The feedwater temperature used in the heat balance calculation was 20°F lower than actual feedwater temperature.

C. The reactor vessel pressure used in the heat balance calculation was 30 psia higher than actual reactor vessel pressure.

D. The steam and feedwater flow rates used in the heat balance calculation were 10 percent higher than actual flow rates.

ANSWER: C.

TOPIC: 293007
KNOWLEDGE: K1.13 [2.3/2.9]
QID: B2884 (P137)

The power range nuclear instruments have been adjusted to 100 percent based on a calculated heat balance. Which one of the following will result in indicated reactor power being greater than actual reactor power?

A. The operator miscalculated the enthalpy of the feedwater to be 10 Btu/lbm higher than actual feedwater enthalpy.

B. The reactor recirculation pump heat input term was omitted from the heat balance calculation.

C. The steam and feedwater flow rates used in the heat balance calculation were 10 percent lower than actual flow rates.

D. The steam pressure used in the heat balance calculation was 50 psi higher than actual steam pressure.

ANSWER: B.

TOPIC: 293007
KNOWLEDGE: K1.13 [2.3/2.9]
QID: B5043

Two of the parameters listed below are used for calculating core thermal power using the standard heat balance method. Which one of the following identifies the two parameters?

	Reactor Core Mass Flow Rate	Feedwater Temperature	Reactor Vessel Pressure	Reactor Vessel Water Level
A.	Yes	No	Yes	No
B.	No	Yes	Yes	No
C.	Yes	No	No	Yes
D.	No	Yes	No	Yes

ANSWER: B.

TOPIC: 293007
KNOWLEDGE: K1.13 [2.3/2.9]
QID: B6043 (P6044)

The power range nuclear instruments have been adjusted to 100 percent based on a heat balance calculation. Which one of the following will result in indicated reactor power being higher than actual reactor power?

A. The steam pressure used in the heat balance calculation was 50 psi higher than actual steam pressure.

B. The ambient heat loss value used in the heat balance calculation was twice the actual ambient heat loss.

C. The feedwater flow rate used in the heat balance calculation was 10 percent lower than actual feedwater flow rate.

D. The feedwater temperature used in the heat balance calculation was 20°F higher than actual feedwater temperature.

ANSWER: B.

TOPIC: 293008
KNOWLEDGE: K1.01 [2.6/2.8]
QID: B88

The highest rate of heat transfer from the fuel rod surface to the coolant is provided by...

A. forced convection with subcooled coolant (no boiling).

B. natural convection with subcooled coolant (no boiling).

C. natural convection with bulk boiling of coolant.

D. forced convection with nucleate boiling.

ANSWER: D.

TOPIC: 293008
KNOWLEDGE: K1.01 [2.6/2.8]
QID: B89

The order of heat transfer modes for coolant flowing through a fuel bundle is...

A. nucleate boiling, single-phase convection, slug flow, annular flow.

B. nucleate boiling, single-phase convection, annular flow, slug flow.

C. single-phase convection, nucleate boiling, slug flow, annular flow.

D. single-phase convection, nucleate boiling, annular flow, slug flow.

ANSWER: C.

TOPIC: 293008
KNOWLEDGE: K1.01 [2.6/2.8]
QID: B389 (P286)

Which one of the following characteristics will enhance steam bubble formation in water adjacent to a heated surface?

A. Chemicals dissolved in the water.

B. The absence of ionizing radiation exposure to the water.

C. A highly polished heat transfer surface with minimal scratches or cavities.

D. The presence of gases dissolved in the water.

ANSWER: D.

TOPIC: 293008
KNOWLEDGE: K1.01 [2.6/2.8]
QID: B885

The dominant mode of heat transfer that occurs when nucleate boiling is present is...

A. convection.

B. radiation.

C. conduction.

D. induction.

ANSWER: A.

TOPIC: 293008
KNOWLEDGE: K1.01 [2.6/2.8]
QID: B986

Which one of the following describes convection heat transfer?

A. The flow of heat through a body or between bodies in direct contact.

B. The flow of heat between two different fluids not in direct contact.

C. The flow of heat from a body by electromagnetic waves across an intervening space.

D. The flow of heat between a fluid and surface by circulation of the fluid.

ANSWER: D.

TOPIC: 293008
KNOWLEDGE: K1.01 [2.6/2.8]
QID: B1183

Refer to the drawing of a pool boiling curve (see figure below). In which region(s) of the curve does a reactor normally operate to transfer heat from the fuel cladding to the coolant at 100 percent power?

A. Regions II and III

B. Region II only

C. Regions I and II

D. Region I only

ANSWER: C.

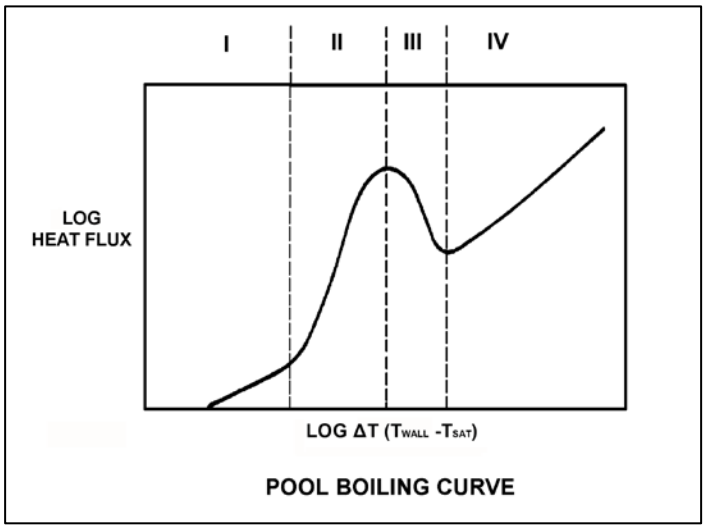

TOPIC: 293008
KNOWLEDGE: K1.01 [2.6/2.8]
QID: B1285 (P2787)

Which one of the following characteristics will enhance steam bubble formation in the coolant adjacent to a fuel rod?

A. Surface scratches or cavities in the fuel cladding.

B. Subsurface void defect in the fuel cladding.

C. Increased coolant velocity past the fuel rod.

D. Chemically inert material dissolved in the coolant.

ANSWER: A.

TOPIC: 293008
KNOWLEDGE: K1.01 [2.6/2.8]
QID: B2784 (P1086)

How does the convective heat transfer coefficient vary from the bottom to the top of a fuel assembly if reactor coolant enters the fuel assembly as subcooled water and exits as superheated steam?

A. Increases continuously.

B. Increases, then decreases.

C. Decreases continuously.

D. Decreases, then increases.

ANSWER: B.

TOPIC: 293008
KNOWLEDGE: K1.04 [2.6/2.7]
QID: B90

Boiling improves heat transfer because the...

A. agitation produced reduces the thickness of the fluid film, and the bubble formation removes the latent heat of vaporization from the heated surface.

B. bubbles produced reduce the turbulence in the bulk fluid flow and transfer the latent heat of condensation to the fluid as the steam bubbles collapse in the laminar fluid film.

C. velocity of the laminar fluid film past the heated surface increases causing the ΔT between the heated surface and the fluid film to increase.

D. velocity of the laminar fluid film near the heated surface decreases, causing the liquid contact time with the heated surface to increase.

ANSWER: A.

TOPIC: 293008
KNOWLEDGE: K1.04 [2.6/2.7]
QID: B486

Nucleate boiling occurring at the surface of a fuel rod...

A. increases the convective heat transfer from the fuel rod to the coolant.

B. decreases the convective heat transfer from the fuel rod to the coolant.

C. has no effect on convective heat transfer because it is boiling heat transfer.

D. causes damage to the fuel rod because it disrupts the laminar flow of coolant next to the fuel rod.

ANSWER: A.

TOPIC: 293008
KNOWLEDGE: K1.04 [2.6/2.7]
QID: B588 (P389)

Core heat transfer rate is maximized by the presence of...

A. laminar flow with no nucleate boiling.

B. turbulent flow with no nucleate boiling.

C. laminar flow with nucleate boiling.

D. turbulent flow with nucleate boiling.

ANSWER: D.

TOPIC: 293008
KNOWLEDGE: K1.04 [2.6/2.7]
QID: B1086 (P2287)

Which one of the following describes a reason for the increased heat transfer rate that occurs when nucleate boiling begins on the surface of a fuel rod?

A. Steam bubbles have a greater thermal conductivity than water.

B. The formation of steam bubbles increases coolant flow along the fuel rod.

C. Radiative heat transfer begins to supplement convective heat transfer.

D. The motion of the steam bubbles causes rapid mixing of the coolant.

ANSWER: D.

TOPIC: 293008
KNOWLEDGE: K1.04 [2.6/2.7]
QID: B1890 (P487)

Nucleate boiling enhances the convective heat transfer coefficient by _____ the thermal conductivity of the coolant and _____ the laminar layer thickness.

A. increasing; decreasing

B. increasing; increasing

C. decreasing; decreasing

D. decreasing; increasing

ANSWER: A.

TOPIC: 293008
KNOWLEDGE: K1.04 [2.6/2.7]
QID: B2385 (P2386)

Subcooled reactor coolant enters the bottom of a fuel assembly in a reactor operating at power. As the coolant flows upward through the fuel assembly, boiling occurs and the coolant exits the fuel assembly at the saturation temperature.

If the coolant had remained subcooled, average fuel temperature would have been _____ because boiling is a _____ efficient method of heat transfer.

A. higher; more

B. higher; less

C. lower; more

D. lower; less

ANSWER: A.

TOPIC: 293008
KNOWLEDGE: K1.04 [2.6/2.7]
QID: B2486 (P2686)

Case 1: Subcooled reactor coolant enters the bottom of a fuel assembly in a reactor operating at power. As the coolant flows upward through the fuel assembly, the water heats up and exits the fuel assembly still subcooled.

Case 2: Same as above except that reactor pressure is decreased such that the coolant begins to boil halfway up the fuel assembly, which results in a saturated steam-water mixture exiting the fuel assembly.

Assume that departure from nucleate boiling is avoided in both cases and that power level does not change. As compared to Case 1, the average fuel temperature for Case 2 will be _____ because boiling is a _____ efficient method of heat transfer.

A. higher; more

B. higher; less

C. lower; more

D. lower; less

ANSWER: C.

TOPIC: 293008
KNOWLEDGE: K1.04 [2.6/2.7]
QID: B2986 (P2986)

Subcooled reactor coolant enters the bottom of a fuel assembly and exits the top of the fuel assembly as a saturated steam-water mixture. How does the convective heat transfer coefficient change as the coolant travels upward through the fuel assembly?

A. Increases only

B. Increases, then decreases

C. Decreases only

D. Decreases, then increases

ANSWER: A.

TOPIC: 293008
KNOWLEDGE: K1.04 [2.6/2.7]
QID: B3785 (P3786)

Subcooled water enters a fuel assembly in a reactor operating at power. As the water flows upward through the fuel assembly, the water begins to boil and exits the fuel assembly as a saturated steam-water mixture.

If fuel assembly power is unchanged and system pressure is increased such that all of the water remains subcooled, the average fuel temperature in the fuel assembly would be _____ because boiling is a _____ efficient method of heat transfer.

A. higher; more

B. higher; less

C. lower; more

D. lower; less

ANSWER: A.

TOPIC: 293008
KNOWLEDGE: K1.04 [2.6/2.7]
QID: B5744 (P5745)

Initially, subcooled water is flowing into a fuel assembly with subcooled water exiting the fuel assembly several degrees hotter than when it entered. No boiling is occurring in the fuel assembly. Assume that fuel assembly thermal power and water flow rate remain the same.

System pressure is decreased, causing some of the water in contact with the fuel rods to boil during transit through the fuel assembly, but the water exiting the fuel assembly remains subcooled. Compared to the initial conditions, the average fuel temperature in the fuel assembly will be _____; and the temperature of the water exiting the fuel assembly will be _____.

A. higher; the same

B. higher; higher

C. lower; the same

D. lower; higher

ANSWER: D.

TOPIC: 293008
KNOWLEDGE: K1.06 [2.5/2.6]
QID: B387

Which one of the following conditions must occur to sustain natural convection in a fluid system?

A. Subcooling of the fluid

B. A phase change in the fluid

C. An enthalpy change in the fluid

D. Radiative heat transfer to the fluid

ANSWER: C.

TOPIC: 293008
KNOWLEDGE: K1.06 [2.5/2.6]
QID: B2386 (P1989)

Which one of the following conditions must occur to sustain natural convection in a fluid system?

A. Subcooling of the fluid.

B. A phase change in the fluid.

C. A density change in the fluid.

D. Radiative heat transfer to the fluid.

ANSWER: C.

TOPIC: 293008
KNOWLEDGE: K1.07 [2.8/3.0]
QID: B388 (P387)

What type of boiling is described as follows?

The bulk temperature of the liquid is below saturation, but the temperature of the heat transfer surface is above saturation. Vapor bubbles form at the heat transfer surface, but condense in the bulk liquid so that no net generation of vapor is obtained.

A. Bulk boiling

B. Subcooled nucleate boiling

C. Transition boiling

D. Partial film boiling

ANSWER: B.

TOPIC: 293008
KNOWLEDGE: K1.07 [2.8/3.0]
QID: B887

Refer to the drawing of a pool-boiling curve (see figure below).

In which region of the curve is nucleate boiling the primary mode of heat transfer?

A. Region I

B. Region II

C. Region III

D. Region IV

ANSWER: B.

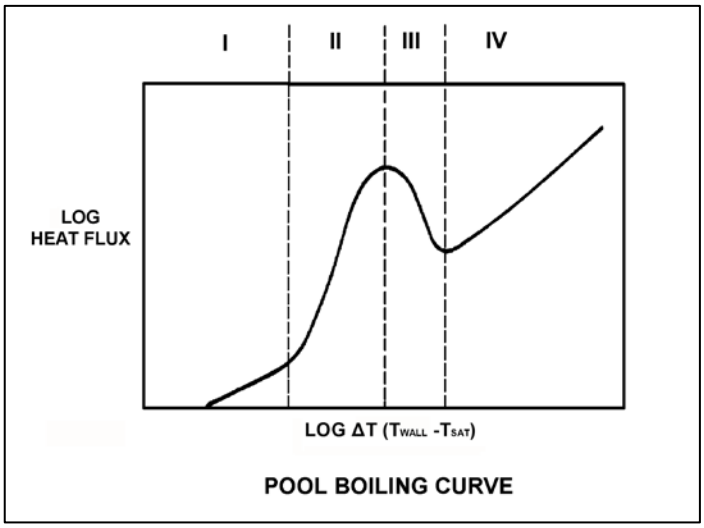

TOPIC: 293008
KNOWLEDGE: K1.07 [2.8/3.0]
QID: B1087 (P1686)

Which one of the following is a characteristic of subcooled nucleate boiling but not saturated nucleate boiling?

A. $T_{Cladding}$ equals T_{Sat}

B. $T_{Cladding}$ is greater than T_{Sat}

C. $T_{Bulk\ Coolant}$ equals T_{Sat}

D. $T_{Bulk\ Coolant}$ is less than T_{Sat}

ANSWER: D.

TOPIC: 293008
KNOWLEDGE: K1.07 [2.8/3.0]
QID: B1287 (P2687)

Which one of the following modes of heat transfer is characterized by steam bubbles moving away from a heated surface and collapsing in the bulk fluid?

A. Bulk boiling

B. Subcooled nucleate boiling

C. Saturated nucleate boiling

D. Saturated natural convection

ANSWER: B.

TOPIC: 293008
KNOWLEDGE: K1.07 [2.8/3.0]
QID: B1786 (P1888)

Which one of the following is a characteristic of saturated nucleate boiling but not subcooled nucleate boiling?

A. $T_{Cladding}$ equals T_{Sat}

B. $T_{Cladding}$ is greater than T_{Sat}

C. $T_{Bulk\ Coolant}$ equals T_{Sat}

D. $T_{Bulk\ Coolant}$ is less than T_{Sat}

ANSWER: C.

TOPIC: 293008
KNOWLEDGE: K1.07 [2.8/3.0]
QID: B1986 (P1186)

Refer to the drawing of a pool boiling curve (see figure below). Identify the region of the curve where the most efficient form of heat transfer exists.

A. Region I

B. Region II

C. Region III

D. Region IV

ANSWER: B.

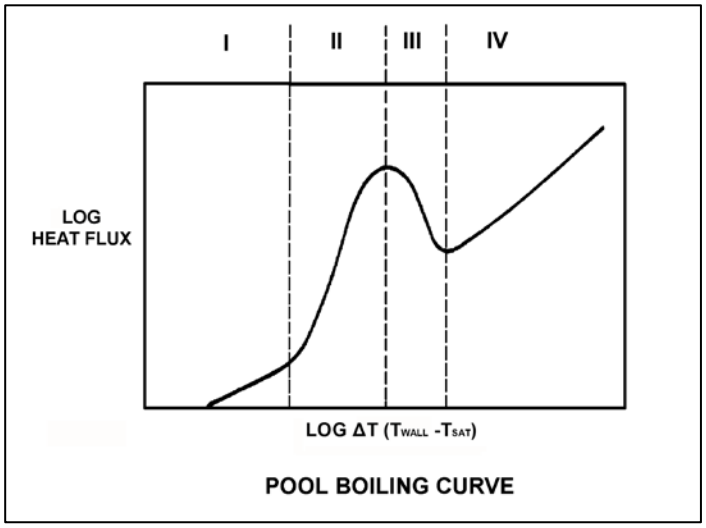

TOPIC: 293008
KNOWLEDGE: K1.07 [2.8/3.0]
QID: B2088 (P1286)

Refer to the drawing of a pool boiling curve (see figure below).

Which region of the curve contains the operating point at which the hottest locations of a reactor normally operate to transfer heat from the fuel cladding to the coolant at 100 percent power?

A. Region I

B. Region II

C. Region III

D. Region IV

ANSWER: B.

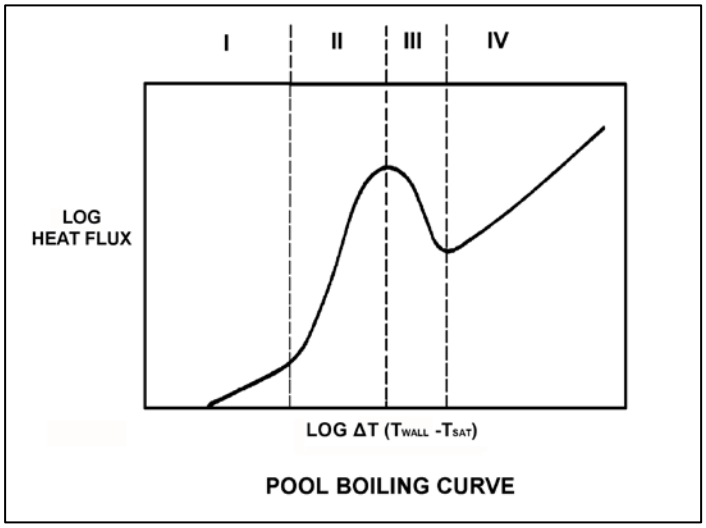

TOPIC: 293008
KNOWLEDGE: K1.07 [2.8/3.0]
QID: B3685 (P3686)

A nuclear power plant is currently shut down after several months of operation at 100 percent power. The shutdown cooling system is in operation, maintaining an average reactor coolant temperature of 280°F. A pressure control malfunction causes reactor coolant pressure to slowly and continuously decrease from 100 psia while reactor coolant temperature remains constant.

Which one of the following describes the location where nucleate boiling will first occur?

A. At a scratch on the surface of a fuel rod near the top of a fuel assembly.

B. At a scratch on the surface of a fuel rod near the bottom of a fuel assembly.

C. In the bulk fluid of a coolant channel near the top of a fuel assembly.

D. In the bulk fluid of a coolant channel near the bottom of a fuel assembly.

ANSWER: A.

TOPIC: 293008
KNOWLEDGE: K1.08 [2.9/3.1]
QID: B142

Which one of the following describes the onset of transition boiling?

A. Steam bubbles begin to blanket the fuel rod causing a rapid increase in the ΔT between the fuel rod and the coolant.

B. Steam bubbles completely blanket the fuel rod causing an increase in the heat flux from the fuel rod.

C. Steam bubbles begin to blanket the fuel rod causing a rapid decrease in ΔT between the fuel rod and the coolant.

D. Steam bubbles break up the laminar layer of coolant on the surface of the fuel rod causing an increase in the heat flux from the fuel rod.

ANSWER: A.

TOPIC: 293008
KNOWLEDGE: K1.08 [2.9/3.1]
QID: B287

Departure from nucleate boiling (DNB) occurs when steam bubbles begin to blanket the fuel rod, resulting in a rapid _____ in heat transfer rate and a rapid _____ in ΔT (fuel cladding minus coolant temperature).

A. decrease; increase

B. decrease; decrease

C. increase; increase

D. increase; decrease

ANSWER: A.

TOPIC: 293008
KNOWLEDGE: K1.08 [2.9/3.1]
QID: B1288 (P3388)

Which one of the following is indicated by a rapid increase in the temperature difference between the fuel cladding and the bulk coolant?

A. Bulk boiling is occurring.

B. Departure from nucleate boiling has been reached.

C. Critical heat flux is increasing.

D. Nucleate boiling is occurring.

ANSWER: B.

TOPIC: 293008
KNOWLEDGE: K1.08 [2.9/3.1]
QID: B1985 (P1288)

Departure from nucleate boiling should not be allowed to occur in the core because...

A. as steam bubbles begin to blanket the fuel rod, the radiative heat transfer decreases.

B. as steam bubbles in the coolant form and then collapse, water hammer occurs.

C. as steam bubbles begin to blanket the fuel rod, its temperature rises sharply.

D. as steam bubbles form in the coolant, voids-induced reactivity changes cause undesirable power changes.

ANSWER: C.

TOPIC: 293008
KNOWLEDGE: K1.08 [2.9/3.1]
QID: B2987 (P287)

Which one of the following describes the heat transfer from a fuel rod experiencing departure from nucleate boiling? (ΔT refers to the difference between the fuel rod surface temperature and the coolant saturation temperature.)

A. Steam bubbles begin to blanket the fuel rod surface, causing a rapid increase in the ΔT for a given heat flux.

B. Steam bubbles completely blanket the fuel rod surface, causing a rapid decrease in the ΔT for a given heat flux.

C. Steam bubbles begin to form on the fuel rod surface, causing a rapid decrease in the heat flux from the fuel rod for a given ΔT.

D. Steam bubbles completely blanket the fuel rod surface, causing a rapid increase in the heat flux from the fuel rod for a given ΔT.

ANSWER: A.

TOPIC: 293008
KNOWLEDGE: K1.09 [3.0/3.2]
QID: B288

Refer to the drawing of a hypothetical fuel bundle coolant channel (see figure below).

For the hypothetical fuel bundle coolant channel shown below, at what point along its length does transition boiling begin?

A. 1

B. 2

C. 3

D. 4

ANSWER: C.

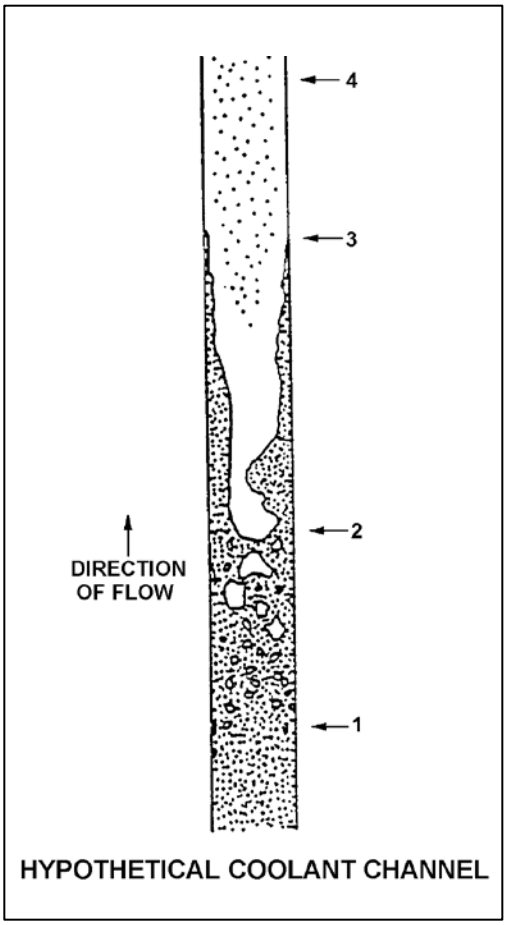

TOPIC: 293008
KNOWLEDGE: K1.09 [3.0/3.2]
QID: B987 (P1891)

Which one of the following describes the heat transfer conditions in a fuel assembly that is experiencing transition boiling?

A. Complete steam blanketing of the fuel rod surface.

B. Alternate wetting and drying of the fuel rod surface.

C. Saturated nucleate boiling.

D. Subcooled nucleate boiling.

ANSWER: B.

TOPIC: 293008
KNOWLEDGE: K1.09 [3.0/3.2]
QID: B1386 (P1689)

Refer to the drawing of a pool boiling curve (see figure below).

Which one of the points shown marks the onset of transition boiling?

A. A

B. B

C. C

D. D

ANSWER: B.

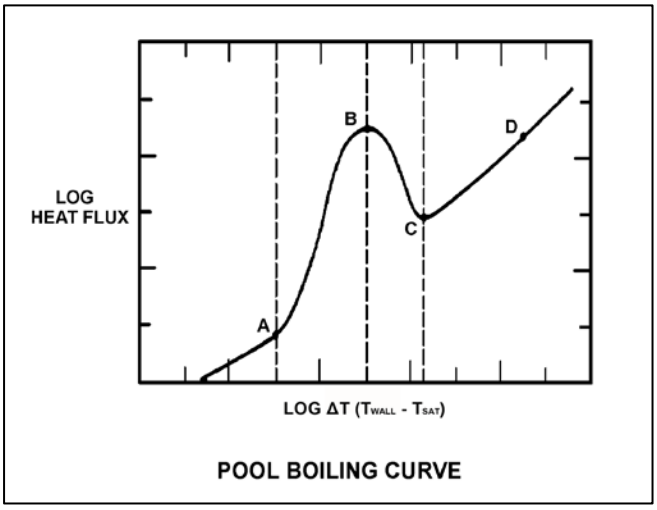

TOPIC: 293008
KNOWLEDGE: K1.09 [3.0/3.2]
QID: B1486 (P2688)

Refer to the drawing of a pool boiling curve (see figure below).

Which one of the following regions represents the most unstable mode of heat transfer?

A. Region I

B. Region II

C. Region III

D. Region IV

ANSWER: C.

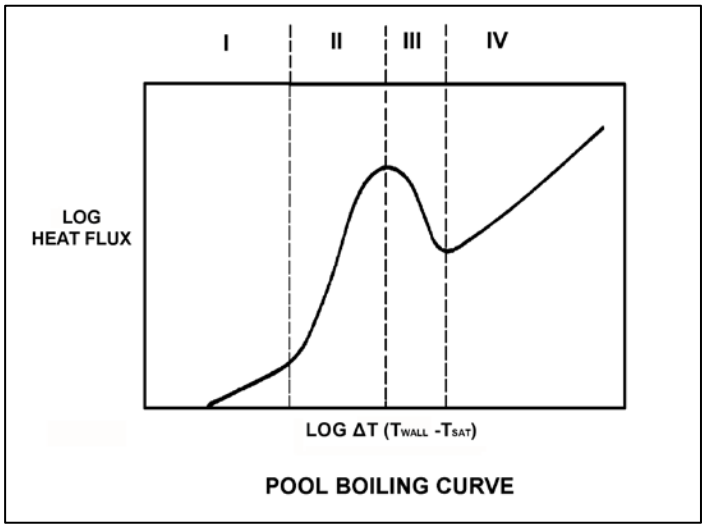

TOPIC: 293008
KNOWLEDGE: K1.09 [3.0/3.2]
QID: B1587 (P1587)

Refer to the drawing of a pool boiling curve (see figure below).

Which one of the points shown marks the smallest ΔT at which stable film boiling can exist?

A. A

B. B

C. C

D. D

ANSWER: C.

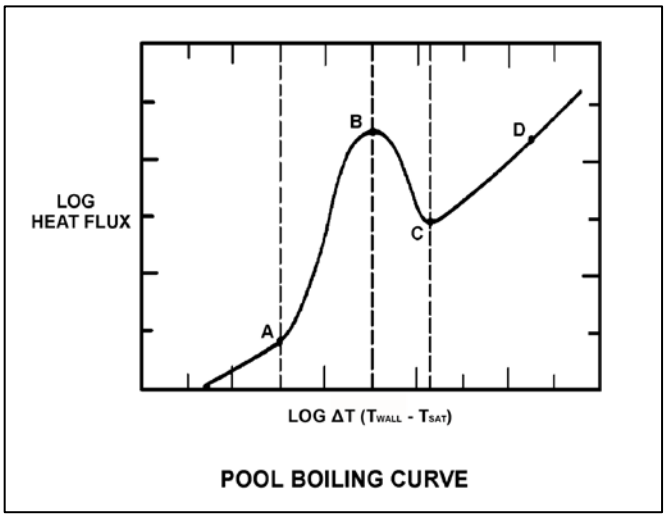

TOPIC: 293008
KNOWLEDGE: K1.09 [3.0/3.2]
QID: B2288 (P1987)

Which one of the following describes the conditions in a fuel assembly that is experiencing transition boiling?

A. Complete steam blanketing of the fuel rod surface.

B. Alternate wetting and drying of the fuel rod surface.

C. Steam bubbles form and collapse on the fuel rod surface.

D. Steam bubbles form on the fuel rod surface and are swept away by subcooled bulk coolant.

ANSWER: B.

TOPIC: 293008
KNOWLEDGE: K1.10 [2.9/3.0]
QID: B289 (P2289)

Refer to the drawing of a pool-boiling curve (see figure below).

With heat flux continuously increasing, the point at which the critical heat flux is reached (point B), marks the beginning of...

A. nucleate boiling.

B. stable film boiling.

C. partial film boiling.

D. single-phase convection.

ANSWER: C.

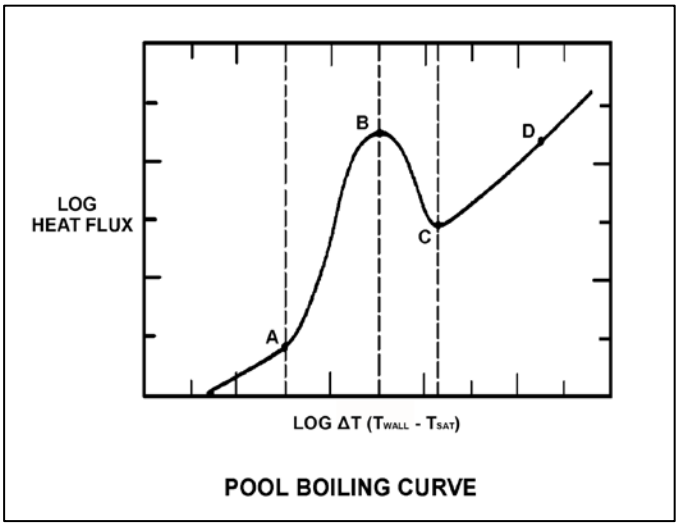

TOPIC: 293008
KNOWLEDGE: K1.10 [2.9/3.0]
QID: B390

The magnitude of the local fuel pin heat flux that is necessary to cause the onset of transition boiling is...

A. greatest at the top of the core and smallest at the bottom of the core.

B. greatest at the bottom of the core and smallest at the top of the core.

C. greatest at the core midplane and smallest at the top and bottom of the core.

D. greatest at the top and bottom of the core and smallest at the core midplane.

ANSWER: B.

TOPIC: 293008
KNOWLEDGE: K1.10 [2.9/3.0]
QID: B1687

A reactor is operating at 100 percent power. Which one of the following will be the initial type of fuel damage experienced if a fuel rod exceeds the critical heat flux?

A. Loss of cladding integrity

B. Loss of pellet integrity

C. Pellet-cladding interaction

D. Cladding creep

ANSWER: A.

TOPIC: 293008
KNOWLEDGE: K1.10 [2.9/3.0]
QID: B1888

How does critical heat flux vary from the bottom to the top of a typical fuel bundle during normal full power operation?

A. Decreases continuously.

B. Decreases, then increases.

C. Increases continuously.

D. Increases, then decreases.

ANSWER: A.

TOPIC: 293008
KNOWLEDGE: K1.10 [2.9/3.0]
QID: B2487

A reactor is shutdown at normal operating temperature and pressure. Which one of the following will decrease the critical heat flux for the reactor fuel? (Assume the reactor remains shutdown.)

A. Fully withdrawing one control rod.

B. Increasing reactor vessel water level by 12 inches.

C. Increasing reactor recirculation flow rate by 100 gpm.

D. Increasing reactor pressure by 10 psig.

ANSWER: D.

TOPIC: 293008
KNOWLEDGE: K1.11 [2.7/2.8]
QID: B91

Which one of the following describes transition (partial film) boiling? (ΔT refers to the difference between the fuel rod surface temperature and the coolant saturation temperature.)

A. A small increase in ΔT at the heat transfer surface and coolant interface causes increased steam blanketing and a reduction in heat flux.

B. The temperature of the heat transfer surface is so high that thermal radiative heat transfer becomes significant and heat flux increases.

C. As the ΔT increases, the increasing number of steam bubbles causes increased agitation and turbulence of the boundary layer, allowing increased heat flux.

D. As the ΔT increases, a few vapor bubbles are formed that may collapse when they enter into the bulk of the fluid.

ANSWER: A.

TOPIC: 293008
KNOWLEDGE: K1.11
QID: B1289

A reactor is operating at full power with a fuel bundle that is experiencing each of the following modes of heat transfer somewhere along its length.

Which one of the following causes the first reduction in the local fuel cladding heat transfer rate as the coolant flows upward through the fuel bundle?

A. Nucleate boiling

B. Stable film boiling

C. Partial film boiling

D. Single-phase convection

ANSWER: C.

TOPIC: 293008
KNOWLEDGE: K1.11 [2.7/2.8]
QID: B1987 (P889)

If the fission rate in a reactor core steadily increases, the mode of heat transfer that occurs immediately after the critical heat flux is reached is called...

A. transition boiling.

B. subcooled nucleate boiling.

C. saturated nucleate boiling.

D. stable film boiling.

ANSWER: A.

TOPIC: 293008
KNOWLEDGE: K1.11 [2.7/2.8]
QID: B2185 (P2188)

Refer to the drawing of a pool boiling curve (see figure below).

Which one of the following describes the heat transfer conditions in a fuel assembly that is experiencing region III heat transfer?

A. Complete steam blanketing of the fuel rod surface.

B. Alternate wetting and drying of the fuel rod surface.

C. Saturated nucleate boiling.

D. Subcooled nucleate boiling.

ANSWER: B.

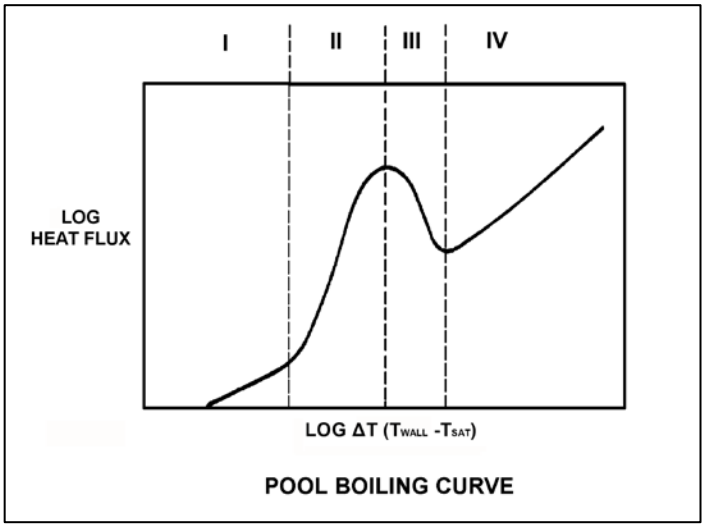

TOPIC: 293008
KNOWLEDGE: K1.12 [2.7/2.8]
QID: B2588 (P2588)

Refer to the drawing of a pool boiling curve (see figure below).

Which one of the following describes the conditions in a fuel assembly that is experiencing region IV heat transfer?

A. Complete steam blanketing of the fuel rod surface.

B. Alternate wetting and drying of the fuel rod surface.

C. Saturated nucleate boiling.

D. Subcooled nucleate boiling.

ANSWER: A.

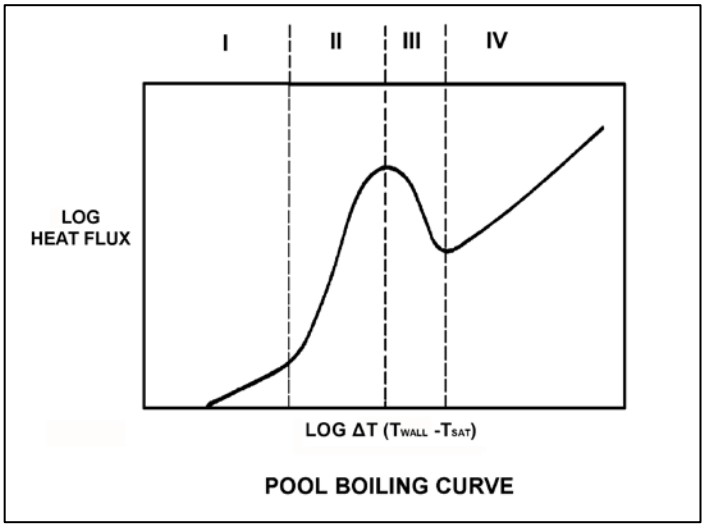

TOPIC: 293008
KNOWLEDGE: K1.12 [2.7/2.8]
QID: B3485 (P3488)

During a loss of coolant accident, some fuel rods may experience stable film boiling. Which one of the following types of heat transfer from the fuel cladding will increase significantly when stable film boiling begins?

A. Forced convection

B. Natural convection

C. Conduction

D. Radiation

ANSWER: D.

TOPIC: 293008
KNOWLEDGE: K1.17 [2.5/2.8]
QID: B1588

A reactor is operating at steady-state 90 percent power. Which one of the following will cause the two-phase coolant flowing upward in a fuel bundle to approach the onset of transition boiling? (Assume reactor power does <u>not</u> change unless stated.)

A. Reactor pressure increases.

B. Recirculation flow rate increases.

C. Feedwater temperature decreases.

D. Fuel bundle power decreases.

ANSWER: A.

TOPIC: 293008
KNOWLEDGE: K1.17 [2.5/2.8]
QID: B1891

A reactor is operating at steady-state 90 percent power. Which one of the following will cause the two-phase coolant flowing upward in a fuel bundle to approach the onset of transition boiling? (Assume reactor power does not change unless stated.)

A. Recirculation flow rate decreases.

B. Reactor pressure decreases.

C. Feedwater temperature decreases.

D. Fuel bundle power decreases.

ANSWER: A.

TOPIC: 293008
KNOWLEDGE: K1.17 [2.5/2.8]
QID: B2089

A reactor is operating at steady-state 70 percent power. Which one of the following will cause the two-phase coolant flowing upward in a fuel bundle to move away from the onset of transition boiling? (Assume reactor power does not change unless stated.)

A. Recirculation flow rate increases.

B. Reactor pressure increases.

C. Feedwater temperature increases.

D. Fuel bundle power increases.

ANSWER: A.

TOPIC: 293008
KNOWLEDGE: K1.17 [2.5/2.8]
QID: B2589

A reactor is operating at steady-state 90 percent power. Which one of the following will cause the two-phase coolant flowing upward in a fuel bundle to move away from the onset of transition boiling? (Assume reactor power does not change unless stated.)

A. Recirculation flow rate decreases.

B. Reactor pressure increases.

C. Feedwater temperature decreases.

D. Fuel bundle power increases.

ANSWER: C.

TOPIC: 293008
KNOWLEDGE: K1.17 [2.5/2.8]
QID: B2789

A reactor is operating at steady-state 90 percent power. Which one of the following will cause the two-phase coolant flowing upward in a fuel bundle to approach the onset of transition boiling? (Assume reactor power does not change unless stated.)

A. Recirculation flow rate increases.

B. Reactor pressure decreases.

C. Feedwater temperature increases.

D. Fuel bundle power decreases.

ANSWER: C.

TOPIC: 293008
KNOWLEDGE: K1.17 [2.5/2.8]
QID: B2888

A reactor is operating at steady-state 90 percent power. Which one of the following will cause the two-phase coolant flowing upward in a fuel bundle to approach the onset of transition boiling? (Assume reactor power does not change unless stated.)

A. Recirculation flow rate increases.

B. Feedwater temperature increases.

C. Reactor pressure decreases.

D. Fuel bundle power decreases.

ANSWER: B.

TOPIC: 293008
KNOWLEDGE: K1.19 [2.6/2.8]
QID: B789

Core inlet subcooling is defined as the difference between the saturation temperature of the fluid in the core inlet plenum and the temperature of the fluid...

A. in the core inlet plenum.

B. at the feedwater pump discharge.

C. in the downcomer area.

D. in the lower fuel channel area.

ANSWER: A.

TOPIC: 293008
KNOWLEDGE: K1.20 [2.4/2.6]
QID: B790

Carryunder is most damaging to which one of the following components?

A. Main turbine

B. Moisture separator (turbine)

C. Recirculation pump

D. Moisture separator (reactor vessel)

ANSWER: C.

TOPIC: 293008
KNOWLEDGE: K1.20 [2.4/2.6]
QID: B989

Which one of the following actions will initially reduce core inlet subcooling?

A. Increase the mass flow rate of saturated water returning to the downcomer.

B. Increase the mass flow rate of saturated steam returning to the downcomer.

C. Increase core recirculation mass flow rate.

D. Isolate steam to one feedwater heater.

ANSWER: B.

TOPIC: 293008
KNOWLEDGE: K1.21 [3.0/3.0]
QID: B290

Void fraction is the ratio of the _____ of steam to the _____ of steam-water mixture at a given elevation in a fuel channel.

A. volume; mass

B. mass; mass

C. volume; volume

D. mass; volume

ANSWER: C.

TOPIC: 293008
KNOWLEDGE: K1.21 [3.0/3.0]
QID: B1487

Given the following conditions for a 10 lbm steam-water mixture:

Steam quality = 20 percent
Pressure = 1,000 psia

Which one of the following is the approximate void fraction?

A. 42 percent

B. 48 percent

C. 84 percent

D. 96 percent

ANSWER: C.

TOPIC: 293008
KNOWLEDGE: K1.21 [3.0/3.0]
QID: B1689

Given the following conditions for a 10 lbm steam-water mixture:

Steam quality = 30 percent
Pressure = 1,000 psia

Which one of the following is the void fraction?

A. 10.1 percent

B. 11.3 percent

C. 88.7 percent

D. 89.9 percent

ANSWER: D.

TOPIC: 293008
KNOWLEDGE: K1.21 [3.0/3.0]
QID: B2389

Given the following conditions for a 10 lbm steam-water mixture:

Steam quality = 40 percent
Pressure = 1,000 psia

Which one of the following is the void fraction?

A. 93.2 percent

B. 89.9 percent

C. 10.1 percent

D. 6.8 percent

ANSWER: A.

TOPIC: 293008
KNOWLEDGE: K1.21 [3.0/3.0]
QID: B2690

Which one of the following ratios can be used to calculate the core void fraction?

A. $\frac{\text{Steam Volume}}{\text{Water Volume}}$

B. $\frac{\text{Steam Volume}}{\text{Steam Volume + Water Volume}}$

C. $\frac{\text{Steam Volume + Water Volume}}{\text{Steam Volume - Water Volume}}$

D. $\frac{\text{Steam Volume + Water Volume}}{\text{Steam Volume x Water Volume}}$

ANSWER: B.

TOPIC: 293008
KNOWLEDGE: K1.22 [2.9/3.0]
QID: B587

A nuclear power plant is operating at steady-state 80 percent power. If reactor recirculation flow rate is decreased from 100 percent to 80 percent, the boiling boundary will <u>initially</u> move _____ the fuel rod because each unit quantity of water is receiving _____ heat from the fuel.

A. up; more

B. up; fewer

C. down; more

D. down; fewer

ANSWER: C.

TOPIC: 293008
KNOWLEDGE: K1.22 [2.9/3.0]
QID: B2091

A reactor is operating at steady-state 70 percent power when recirculation flow rate is increased by 5 percent.

Which one of the following statements describes the initial response of the boiling boundary in the core?

A. It physically moves upward, because each unit quantity of coolant must travel farther through a fuel bundle before vaporizing.

B. It physically moves upward, because each unit quantity of coolant enters the core with a larger subcooled margin.

C. It physically moves downward, because each unit quantity of coolant will vaporize sooner as it travels through a fuel bundle.

D. It physically moves downward, because each unit quantity of coolant enters the core with a smaller subcooled margin.

ANSWER: A.

TOPIC: 293008
KNOWLEDGE: K1.23 [2.5/2.7]
QID: B688

Which one of the following is the appropriate quality of a saturated steam-water mixture leaving a cyclone separator at 985 psig and 1174 Btu/lbm?

A. 95 percent

B. 96 percent

C. 97 percent

D. 98 percent

ANSWER: C.

TOPIC: 293008
KNOWLEDGE: K1.23 [2.5/2.7]
QID: B1387

Which one of the following is the appropriate quality of a saturated steam-water mixture leaving a cyclone separator at 985 psig and 1180 Btu/lbm?

A. 96 percent

B. 97 percent

C. 98 percent

D. 99 percent

ANSWER: C.

TOPIC: 293008
KNOWLEDGE: K1.23 [2.5/2.7]
QID: B1788

Which one of the following is the approximate quality of a saturated steam-water mixture leaving a fuel bundle at 948 psig and 905 Btu/lbm?

A. 27 percent

B. 44 percent

C. 56 percent

D. 73 percent

ANSWER: C.

TOPIC: 293008
KNOWLEDGE: K1.24 [2.4/2.5]
QID: B391

Refer to the drawing of a fuel rod and adjacent coolant flow channel (see figure below).

With a power plant operating at steady-state 100 percent reactor power at the beginning of a fuel cycle, which one of the following has the greater temperature difference?

A. Coolant laminar layer

B. Cladding corrosion film

C. Zircaloy cladding

D. Pellet-to-cladding gap

ANSWER: D.

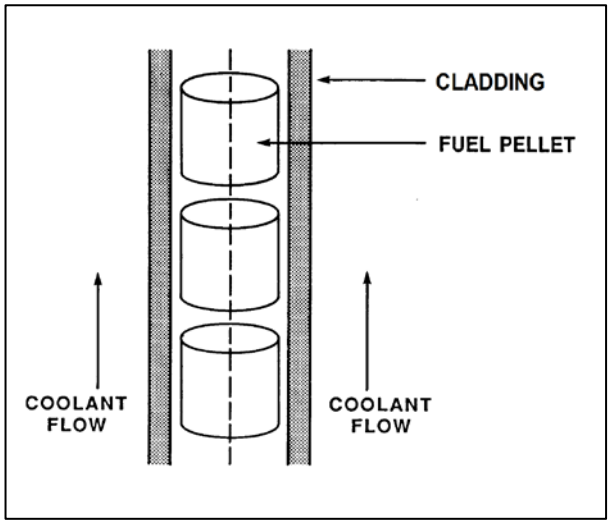

TOPIC: 293008
KNOWLEDGE: K1.24 [2.4/2.5]
QID: B1989 (P391)

Refer to the drawing of a fuel rod and adjacent coolant flow channel (see figure below).

With a nuclear power plant operating at steady-state 100 percent reactor power at the beginning of a fuel cycle, which one of the following has the greater temperature difference?

A. Fuel pellet centerline-to-pellet surface

B. Fuel pellet surface-to-cladding gap

C. Zircaloy cladding

D. Coolant laminar layer

ANSWER: A.

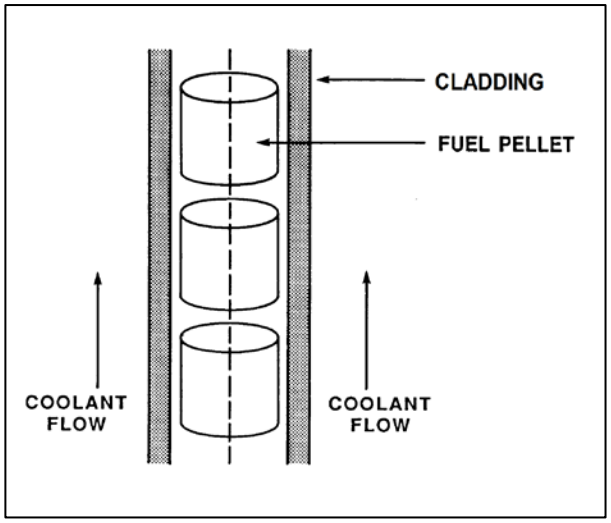

TOPIC: 293008
KNOWLEDGE: K1.25 [3.2/3.2]
QID: B292

A reactor is at 100 percent power when a trip of the recirculation pumps occurs. Void fraction percentage will...

A. stay the same, due to minimal changes in reactor pressure.

B. decrease, because the reactor power decrease reduces the steam bubbles being generated.

C. increase, because steam bubbles are no longer being swept away.

D. decrease initially, due to reactor pressure increase, then return to initial value.

ANSWER: C.

TOPIC: 293008
KNOWLEDGE: K1.25 [3.2/3.2]
QID: B1189

Forced circulation through a reactor core is required at all times during power operation to prevent...

A. the core from becoming prompt critical due to high fuel and coolant temperatures.

B. exceeding reactor vessel and core design steaming rates.

C. high fuel cladding surface temperatures, which could result in a crack or leak in the cladding.

D. jet pump cavitation, which could reduce the power generated by the core.

ANSWER: C.

TOPIC: 293008
KNOWLEDGE: K1.25 [3.2/3.2]
QID: B3789

Which one of the following describes the relationship between the feedwater mass flow rate entering the reactor vessel and the core mass flow rate at steady-state 100 percent reactor power?

A. The mass flow rates are about the same as long as the reactor vessel downcomer level is constant.

B. The mass flow rates are about the same as long as the reactor recirculation mass flow rate is constant.

C. The feedwater mass flow rate is much smaller than the core mass flow rate because most of the core mass flow is returned to the reactor vessel downcomer by the steam separators.

D. The feedwater mass flow rate is much larger than the core mass flow rate because the feedwater pump differential pressure is much larger than the core differential pressure.

ANSWER: C.

TOPIC: 293008
KNOWLEDGE: K1.26 [2.9/3.1]
QID: B1389

Refer to the drawing of a core recirculation jet pump (see figure below).

The highest pressure will exist at point _____; and the highest velocity will occur at point _____.

A. 1; 4

B. 2; 4

C. 1; 3

D. 2; 3

ANSWER: C.

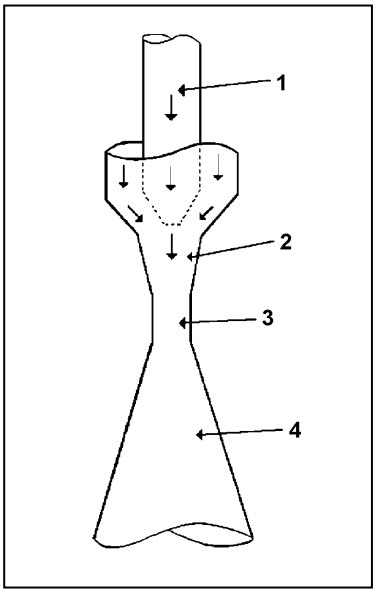

TOPIC: 293008
KNOWLEDGE: K1.26 [2.9/3.1]
QID: B2791

Refer to the drawing of a core recirculation jet pump (see figure below).

During normal operation, the lowest pressure will exist at point _____; and the highest velocity will occur at point _____.

A. 3; 3

B. 3; 4

C. 4; 3

D. 4; 4

ANSWER: A.

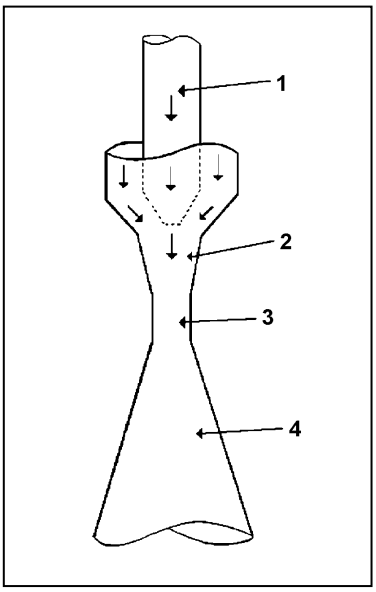

TOPIC: 293008
KNOWLEDGE: K1.28 [2.3/2.5]
QID: B490

A reactor is operating at steady-state 100 percent power when recirculation flow is decreased from 100 percent to 80 percent. During the flow reduction, the boiling boundary will move _____ in the core because each unit quantity of water flowing through the core is required to remove _____ heat from the fuel rods.

A. upward; less

B. upward; more

C. downward; less

D. downward; more

ANSWER: D.

TOPIC: 293008
KNOWLEDGE: K1.28 [2.3/2.5]
QID: B1789 (P1790)

Single-phase coolant flow resistance in a reactor core is directly proportional to the square of coolant _____; and inversely proportional to _____.

A. velocity; fuel assembly length

B. temperature; fuel assembly length

C. velocity; coolant channel cross-sectional area

D. temperature; coolant channel cross-sectional area

ANSWER: C.

TOPIC: 293008
KNOWLEDGE: K1.28 [2.3/2.5]
QID: B5445 (P5446)

Refer to the drawing of a section of pipe that contains flowing subcooled water (see figure below).

Given:

- Pressure at P_1 is 24 psig.
- Pressure at P_2 is 16 psig.
- Pressure change due to change in velocity is 2 psig.
- Pressure change due to change in elevation is 10 psig.

The pressure decrease due to friction head loss between P_1 and P_2 is _____; and the direction of flow is from _____.

A. 2 psig; left to right

B. 2 psig; right to left

C. 4 psig; left to right

D. 4 psig; right to left

ANSWER: D.

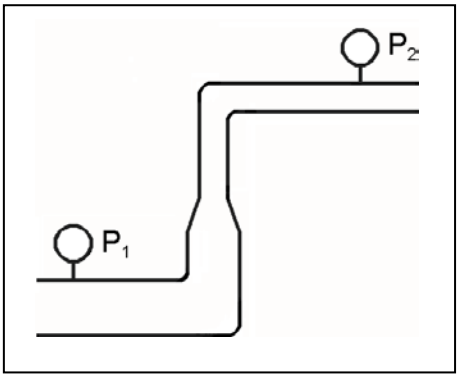

TOPIC: 293008
KNOWLEDGE: K1.28 [2.3/2.5]
QID: B5845 (P5847)

Refer to the drawing of a section of pipe that contains flowing subcooled water (see figure below).

Given:

- Pressure at P_1 is 26 psig.
- Pressure at P_2 is 34 psig.
- Pressure change due to change in velocity is 2 psig.
- Pressure change due to change in elevation is 8 psig.

The pressure decrease due to friction head loss between P_1 and P_2 is _____; and the direction of flow is from _____.

A. 2 psig; left to right

B. 2 psig; right to left

C. 4 psig; left to right

D. 4 psig; right to left

ANSWER: A.

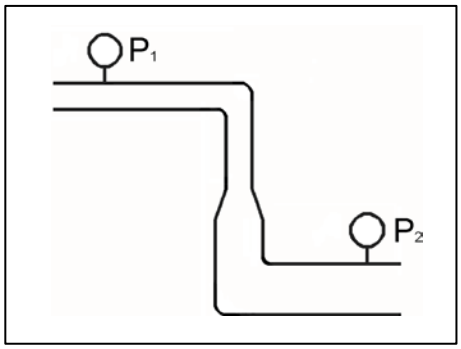

TOPIC: 293008
KNOWLEDGE: K1.28 [2.3/2.5]
QID: B6646 (P6648)

Refer to the drawing of a section of pipe that contains flowing subcooled water. (See figure below).

Given:

- Pressure at P_1 is 30 psig.
- Pressure at P_2 is 32 psig.
- Pressure change due to change in velocity is 2 psig.
- Pressure change due to change in elevation is 2 psig.

The pressure decrease due to friction head loss between P_1 and P_2 is _____; and the direction of flow is from _____.

A. 2 psig; left to right

B. 2 psig; right to left

C. 6 psig; left to right

D. 6 psig; right to left

ANSWER: B.

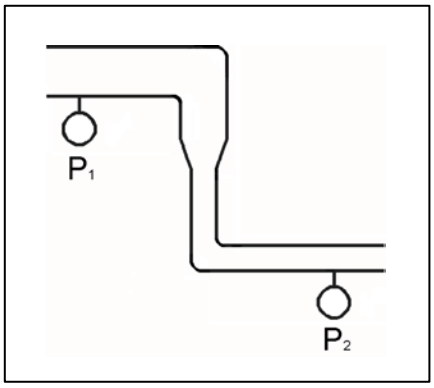

TOPIC: 293008
KNOWLEDGE: K1.28 [2.3/2.5]
QID: B7046 (P7048)

Refer to the drawing of a section of pipe that contains flowing subcooled water (see figure below).

Given:

- Pressure at P_1 is 34 psig.
- Pressure at P_2 is 20 psig.
- Pressure change due to change in velocity is 2 psig.
- Pressure change due to change in elevation is 8 psig.

The pressure decrease due to friction head loss between P_1 and P_2 is _____; and the direction of flow is from _____.

A. 2 psig; left to right

B. 2 psig; right to left

C. 4 psig; left to right

D. 4 psig; right to left

ANSWER: D.

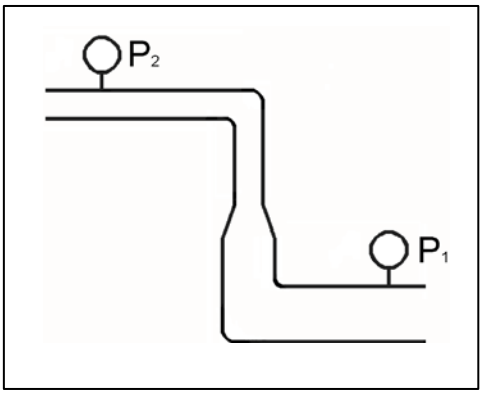

TOPIC: 293008
KNOWLEDGE: K1.29 [2.8/3.0]
QID: B93

Which one of the following statements describes the effect of an increase in bundle power on bundle flow rate in a centrally located fuel bundle? (Assume total recirculation flow remains constant.)

A. Bundle flow rate increases, because increased boiling causes the coolant density to decrease, thereby reducing flow resistance.

B. Bundle flow rate decreases, because increased boiling increases backpressure from increased reactor steam dome pressure.

C. Bundle flow rate increases, because increased boiling causes acceleration of coolant due to rapid expansion.

D. Bundle flow rate decreases, because increased boiling increases backpressure due to increased turbulence.

ANSWER: D.

TOPIC: 293008
KNOWLEDGE: K1.29 [2.8/3.0]
QID: B2090

Reactors A and B are identical. Reactor A is operating at 75 percent power and reactor B is operating at 50 percent power. Both reactors have the same power distribution and core mass flow rate.

Compared to the center fuel bundle in reactor A, the center fuel bundle in reactor B has the _____ coolant flow rate and the _____ critical power.

A. lower; lower

B. lower; higher

C. higher; lower

D. higher; higher

ANSWER: D.

TOPIC: 293008
KNOWLEDGE: K1.29 [2.8/3.0]
QID: B2390

Reactors A and B are identical. Reactor A is operating at 50 percent power and reactor B is operating at 75 percent power. Both reactors have the same power distribution and core mass flow rate.

Compared to the center fuel bundle in reactor A, the center fuel bundle in reactor B has the _____ critical power and the _____ coolant flow rate.

A. lower; lower

B. lower; higher

C. higher; lower

D. higher; higher

ANSWER: A.

TOPIC: 293008
KNOWLEDGE: K1.29 [2.8/3.0]
QID: B5646

Reactors A and B are operating at steady-state 100 percent power. The reactors are identical except that reactor A has core orifices and reactor B does <u>not</u>. Both reactors have the same power distribution and core mass flow rate.

Compared to the center fuel bundle in reactor B, the center fuel bundle in reactor A will have the _____ exit steam quality and the _____ critical power.

A. lower; lower

B. lower; higher

C. higher; lower

D. higher; higher

ANSWER: B.

TOPIC: 293008
KNOWLEDGE: K1.30 [2.7/2.7]
QID: B590

Without core orifices, the coolant flow rate through a high-power bundle will be less than the flow rate through a low-power bundle because the...

A two-phase flow-friction multiplier will be greater in the low-power bundle.

B. channel quality will be greater in the high-power bundle.

C. bypass flow will be greater in the high-power bundle.

D. thermal expansion of the fuel rods will be greater in the high-power bundle.

ANSWER: B.

TOPIC: 293008
KNOWLEDGE: K1.30 [2.7/2.7]
QID: B890

With a reactor operating at 100 percent power, if core orifices were <u>not</u> used, the highest core flow rates would exist in...

A. low-power bundles, because of decreased flow resistance.

B. low-power bundles, because of reduced control rod obstruction.

C. high-power bundles, because of decreased flow resistance.

D. high-power bundles, because of reduced control rod obstruction.

ANSWER: A.

TOPIC: 293008
KNOWLEDGE: K1.30 [2.7/2.7]
QID: B990

Reactors A and B are operating at steady-state 100 percent power. The reactors are identical except that reactor A has core orifices and reactor B does not. Both reactors have the same power distribution and core mass flow rate.

Compared to the center fuel bundle in reactor B, the center fuel bundle in reactor A will have the _____ critical power and the _____ coolant flow rate.

A. lower; lower

B. lower; higher

C. higher; lower

D. higher; higher

ANSWER: D.

TOPIC: 293008
KNOWLEDGE: K1.30 [2.7/2.7]
QID: B1190

A reactor is operating at the point of adding heat during a reactor heatup. With only single-phase flow in the reactor, core orificing causes core flow to be...

A. highest in the periphery bundles.

B. highest in the central bundles.

C. the same for all bundles.

D. unpredictable.

ANSWER: B.

TOPIC: 293008
KNOWLEDGE: K1.30 [2.7/2.7]
QID: B1590

Two reactors are operating at steady-state 50 percent power. The reactors are identical except that one reactor has core orifices and the other does not. Both reactors have the same power distribution and core mass flow rate.

The orificed core will have the _____ critical power and the _____ core differential pressure.

A. higher; higher

B. higher; lower

C. lower; higher

D. lower; lower

ANSWER: A.

TOPIC: 293008
KNOWLEDGE: K1.30 [2.7/2.7]
QID: B1691

A reactor is operating at 100 percent power at the beginning of core life. If core orifices were not used, the lowest bundle flow rate would exist in...

A. peripheral bundles that have control rods partially inserted.

B. central bundles that have control rods partially inserted.

C. peripheral bundles that have control rods completely withdrawn.

D. central bundles that have control rods completely withdrawn.

ANSWER: D.

TOPIC: 293008
KNOWLEDGE: K1.30 [2.7/2.7]
QID: B1790

Reactors A and B are operating at steady-state 100 percent power. The reactors are identical except that reactor A has core orifices and reactor B does not. Both reactors have the same power distribution and core mass flow rate.

Compared to the center fuel bundle in reactor A, the center fuel bundle in reactor B will have the _____ critical power and the _____ coolant flow rate.

A. lower; lower

B. lower; higher

C. higher; lower

D. higher; higher

ANSWER: A.

TOPIC: 293008
KNOWLEDGE: K1.30 [2.7/2.7]
QID: B2187

Reactors A and B are operating at steady-state 50 percent power. The reactors are identical except that reactor A has core orifices and reactor B does not. Both reactors have the same power distribution and core mass flow rate.

Reactor B will have the _____ critical power and the _____ core differential pressure.

A. higher; higher

B. higher; lower

C. lower; higher

D. lower; lower

ANSWER: D.

TOPIC: 293008
KNOWLEDGE: K1.30 [2.7/2.7]
QID: B2591

Reactors A and B are operating at steady-state 100 percent. The reactors are identical except that reactor A has core orifices and reactor B does not. Both reactors have the same power distribution and core mass flow rate.

Compared to the outer fuel bundles in reactor B, the outer fuel bundles in reactor A will have the _____ critical power and the _____ coolant flow rate.

A. lower; lower

B. lower; higher

C. higher; lower

D. higher; higher

ANSWER: A.

TOPIC: 293008
KNOWLEDGE: K1.30 [2.7/2.7]
QID: B2890

Reactors A and B are operating at steady-state 100 percent power. The reactors are identical except that reactor A has core orifices and reactor B does not. Both reactors have the same power distribution and core mass flow rate.

Compared to the center fuel bundle in reactor A, the center fuel bundle in reactor B will have the _____ exit steam quality and the _____ critical power.

A. lower; lower

B. lower; higher

C. higher; lower

D. higher; higher

ANSWER: C.

TOPIC: 293008
KNOWLEDGE: K1.31 [2.9/3.0]
QID: B291

Core orificing is used in the reactor core because the orifices...

A. counteract the buoyant force of the bubbles accelerating flow in the high-power bundles.

B. improve the distribution of core flow to offset the effect of increasing quality on bundle flow.

C. increase core ΔP so that minor crud buildup on fuel bundles will not adversely affect flow.

D. decrease flow during periods of natural circulation to increase the void coefficient.

ANSWER: B.

TOPIC: 293008
KNOWLEDGE: K1.31 [2.9/3.0]
QID: B1388

Which one of the following occurs as a result of reactor core orifices?

A. The core differential pressure is minimized at all power levels.

B. The total core coolant flow rate remains the same at all power levels.

C. The total core coolant flow rate is divided equally through all bundles at all power levels.

D. The highest bundle coolant flow rates exist in core interior bundles at all power levels.

ANSWER: D.

TOPIC: 293008
KNOWLEDGE: K1.31 [2.9/3.0]
QID: B3890

Given:

- Reactors A and B are identical except that reactor A has no core orifices while reactor B is equipped with orifices.
- Both reactors always operate with identical recirculation system flow rates.
- Both reactors are operating at steady-state 80 percent power.
- Both reactors have the same core power distribution.

Compared to reactor A, the critical power ratio (CPR) in the central fuel bundles of reactor B is _____; and the average power in the peripheral fuel bundles of reactor B is _____.

A. smaller; smaller

B. smaller; larger

C. larger; smaller

D. larger; larger

ANSWER: C.

TOPIC: 293008
KNOWLEDGE: K1.32 [2.5/2.6]
QID: B690

Core bypass flow is...

A. undesirable, but cannot be prevented due to machined clearances in the reactor vessel.

B. desirable, because it provides cooling for low-power areas of the core.

C. undesirable, because it makes actual core flow hard to measure.

D. desirable, because it provides cooling for incore instrumentation.

ANSWER: D.

TOPIC: 293008
KNOWLEDGE: K1.32 [2.5/2.6]
QID: B2991

Which one of the following is the approximate percentage of total core flow that bypasses the fuel coolant channels in a reactor operating at 100 percent power with 100 percent recirculation flow?

A. 0.01 percent

B. 0.1 percent

C. 1 percent

D. 10 percent

ANSWER: D.

TOPIC: 293008
KNOWLEDGE: K1.32 [2.5/2.6]
QID: B3191

A reactor was initially operating at steady-state 100 percent power with 100 percent core flow rate. Reactor power was then decreased and stabilized at 75 percent using only control rods for reactivity control, while core flow rate was maintained at 100 percent.

During the power decrease, core bypass flow rate _____ because core pressure drop _____.

A. decreased; increased

B. decreased; decreased

C. increased; increased

D. increased; decreased

ANSWER: B.

TOPIC: 293008
KNOWLEDGE: K1.32 [2.5/2.6]
QID: B3290

A reactor is initially operating at steady-state 100 percent power. Reactor power is decreased to 80 percent while maintaining the total flow rate through the core region unchanged. During the power decrease, the core bypass flow rate will…

A. increase, because two-phase flow resistance in the core is greater at 80 percent power.

B. decrease, because two-phase flow resistance in the core is smaller at 80 percent power.

C. remain the same, because core bypass flow rate is dependent only on reactor core flow rate.

D. remain the same, because core bypass flow rate is unaffected by changes in reactor power.

ANSWER: B.

TOPIC: 293008
KNOWLEDGE: K1.33 [2.4/2.6]
QID: B384

What is the purpose of the coolant flow that bypasses the fuel bundles to enter the core interstitial regions?

A. Removes the heat generated in the control rods and local power range monitors.

B. Equalizes core differential pressure between the inlet and outlet plenums.

C. Offsets the decrease in heat removal from the fuel bundles as two-phase flow resistance increases.

D. Lubricates the interfacing surfaces of control rods and fuel channels to reduce sliding friction and wear.

ANSWER: A.

TOPIC: 293008
KNOWLEDGE: K1.33 [2.4/2.6]
QID: B1390

Reactor coolant flow that bypasses the core is necessary to...

A. provide a source of water to the incore thermocouples to ensure they measure a representative coolant temperature.

B. act as a neutron reflector to minimize fast neutron leakage.

C. ensure that recirculation pump flow rate is adequate to prevent pump overheating.

D. provide cooling to prevent excessive boiling in the bypass region.

ANSWER: D.

TOPIC: 293008
KNOWLEDGE: K1.34 [2.9/3.1]
QID: B192

Which one of the following statements describes natural circulation in the reactor vessel after a loss of offsite power?

A. Coolant density in the downcomer and a reduction of density in the core region support the cycle.

B. Two-phase flow in the separators allows steam to be removed and water to return to the downcomer region.

C. Relief and safety valves provide a heat sink for decay heat; in spite of leakage, control rod drive flow is adequate to maintain inventory.

D. Density of the coolant in the core region increases, allowing coolant in the downcomer to enter the core.

ANSWER: A.

TOPIC: 293008
KNOWLEDGE: K1.34 [2.9/3.1]
QID: B691

Which one of the following statements describes natural circulation in a shutdown reactor? (Assume no isolation condenser exists.)

A. The moisture separators return the liquid portion of the coolant mixture exiting the core to the downcomer where it cools and increases in density.

B. The jet pump diffusers establish a thermal driving head by increasing the velocity of the coolant as it flows downward through the diffuser.

C. Coolant flows from the downcomer into a reactor recirculation loop and is returned to the core.

D. Emergency coolant injection establishes a thermal driving head by providing cold coolant to the downcomer.

ANSWER: A.

TOPIC: 293008
KNOWLEDGE: K1.35 [3.1/3.3]
QID: B293

A reactor is shut down with all reactor recirculating pumps stopped. Which one of the following explains why it is important to monitor reactor vessel skin temperatures?

A. Significant differential temperature between the top and bottom reactor vessel heads will result in excessive thermal stresses in the reactor vessel wall.

B. Significant differential temperature between the upper and lower elevation reactor vessel skin indicates that thermal stratification is occurring.

C. These temperatures provide a backup indication of reactor water level because the skin temperatures detected above vessel water level will be lower than those below vessel water level.

D. These temperatures provide the best indication of the accuracy of the shutdown reactor water level instruments due to the temperature variance from instrument calibration conditions.

ANSWER: B.

TOPIC: 293008
KNOWLEDGE: K1.35 [3.1/3.3]
QID: B3490

Given:

- A nuclear power plant was shut down one week ago from long-term operation at 100 percent power.
- All reactor recirculation pumps are off.
- All reactor head vents are open.
- A shutdown core cooling system is currently in use, maintaining reactor coolant temperature stable at 170°F.

Reactor coolant temperature is monitored by a detector at the inlet to the in-service shutdown core cooling heat exchanger.

The flow rate from the shutdown core cooling system to the core is inadvertently throttled, resulting in thermal stratification of the reactor coolant in the core. Which one of the following combinations will occur if this thermal stratification is permitted to exist for 24 hours?

A. Water in the core will begin to boil, and the in-service shutdown cooling pump will cavitate.

B. The in-service shutdown cooling pump will cavitate, and the jet pumps will cavitate.

C. The jet pumps will cavitate, and reactor coolant temperature will indicate lower than actual core water temperature.

D. Reactor coolant temperature will indicate lower than actual core water temperature, and water in the core will begin to boil.

ANSWER: D.

TOPIC: 293008
KNOWLEDGE: K1.36 [3.1/3.3]
QID: B1491

A reactor is operating at 100 percent power when a loss of offsite power results in a reactor scram and a loss of forced core coolant flow. Several minutes later, the development of natural circulation flow will be indicated by differential _____ across the core plate and flow through the _____ pumps.

A. temperature; recirculation

B. temperature; jet

C. pressure; recirculation

D. pressure; jet

ANSWER: D.

TOPIC: 293008
KNOWLEDGE: K1.36 [3.1/3.3]
QID: B3891

A reactor was shut down from long-term 100 percent power operation 10 days ago. Five minutes ago, a station blackout caused a complete loss of forced coolant circulation through the core. The following conditions currently exist:

- Reactor vessel (RV) pressure indicates 0 psig.
- Main steam isolation valves are closed.
- Reactor head vents are open with no steam issuing.
- Average reactor coolant temperature is 150°F.
- Differential temperature between the upper and lower RV heads is 20°F and increasing.

Over the next hour or so, which one of the following will occur without operator action as natural circulation becomes established in the RV?

A. RV pressure will slowly increase and stabilize at about 10 psig, and the differential temperature between the upper and lower RV heads will stabilize at a value greater than 0°F.

B. RV pressure will slowly increase and stabilize at about 10 psig, and the differential temperature between the upper and lower RV heads will stabilize at 0°F.

C. RV pressure will remain near 0 psig, and the differential temperature between the upper and lower RV heads will stabilize at a value greater than 0°F.

D. RV pressure will remain near 0 psig, and the differential temperature between the upper and lower RV heads will stabilize at 0°F.

ANSWER: C.

TOPIC: 293008
KNOWLEDGE: K1.37 [3.2/3.4]
QID: B891

While a reactor is shut down, what effect will decreasing reactor water level to just below the steam separators have on natural circulation flow rate?

A. Flow rate will significantly decrease due to the loss of communication between the annulus and the core.

B. Flow rate will decrease initially and then increase to a new equilibrium value slightly less than the original flow rate.

C. Flow rate will increase to a new stable value as the temperature of the water in the core increases to a new stable value.

D. Flow rate will <u>not</u> be significantly affected because the thermal driving head is primarily dependent on the differential temperature between the core and the annulus.

ANSWER: A.

TOPIC: 293008
KNOWLEDGE: K1.37 [3.2/3.4]
QID: B3086

After operating at a high power level for several weeks, a reactor was shut down yesterday and cooled down to repair a steam line leak. Shutdown cooling water pumps are currently being used to maintain reactor temperature and pressure. The pumps will be stopped in 30 minutes to commence a four hour test.

What action, if any, should be taken to enhance natural circulation cooling during the test, and why?

A. No action is necessary; the increase of density in the downcomer and the reduction of density in the core region will easily support circulation.

B. No action is necessary; the density of the mixture in the core region increases, thereby allowing liquid in the downcomer to enter the core.

C. Raise vessel pressure to allow vessel relief valves to lift and create a heat sink for decay heat while control rod drive flow maintains inventory.

D. Raise vessel water level above the bottom of the steam separators to provide a liquid flow path from the inside to the outside of the core shroud.

ANSWER: D.

TOPIC: 293009
KNOWLEDGE: K1.01 [2.1/2.5]
QID: B1092

In a reactor operating at full power, the fuel bundle with the highest power always has the...

A. greatest critical power ratio.

B. greatest radial peaking factor.

C. smallest linear heat generation rate.

D. smallest maximum average planar linear heat generation rate.

ANSWER: B.

TOPIC: 293009
KNOWLEDGE: K1.01 [2.1/2.5]
QID: B1592

The radial peaking factor for a fuel bundle is expressed mathematically as...

A. $\frac{\text{core average bundle power}}{\text{individual bundle power}}$

B. $\frac{\text{peak nodal power}}{\text{core average nodal power}}$

C. $\frac{\text{core average nodal power}}{\text{peak nodal power}}$

D. $\frac{\text{individual bundle power}}{\text{core average bundle power}}$

ANSWER: D.

TOPIC: 293009
KNOWLEDGE: K1.01 [2.1/2.5]
QID: B2392

In a reactor operating at full power, the fuel bundle with the lowest power always has the smallest...

A. critical power ratio.

B. radial peaking factor.

C. axial peaking factor.

D. critical heat flux.

ANSWER: B.

TOPIC: 293009
KNOWLEDGE: K1.01 [2.1/2.5]
K1.02 [2.2/2.6]
QID: B2592

A reactor is operating at steady-state 80 percent power near the beginning of a fuel cycle with core power distribution peaked radially in the center of the core and axially in the bottom half of the core. Only reactor recirculation flow rate adjustments will be used to maintain constant reactor power over the next two months.

Neglecting any change in reactor poison distribution, during the next two months the maximum radial peaking factor will _____; and the maximum axial peaking factor will _____.

A. increase; decrease

B. increase; increase

C. decrease; decrease

D. decrease; increase

ANSWER: C.

TOPIC: 293009
KNOWLEDGE: K1.01 [2.1/2.5]
QID: B2892

In a reactor operating at full power, the fuel bundle with the greatest radial peaking factor always has the...

A. greatest power.

B. greatest critical power ratio.

C. smallest axial peaking factor.

D. smallest linear heat generation rate.

ANSWER: A.

TOPIC: 293009
KNOWLEDGE: K1.01 [2.1/2.5]
K1.02 [2.2/2.6]
QID: B2992

A reactor is initially operating at steady-state 40 percent power with power distribution peaked both radially and axially in the center of the core. Reactor power is then increased to 70 percent over the next two hours using only reactor recirculation flow rate adjustments for reactivity control. Neglect any effect from changes in reactor poisons.

During the power increase, the location of the maximum core radial peaking factor will _____ of the core; and the location of the maximum core axial peaking factor will _____ of the core.

A. shift to the periphery; move toward the bottom

B. shift to the periphery; move toward the top

C. remain near the center; move toward the bottom

D. remain near the center; move toward the top

ANSWER: D.

TOPIC: 293009
KNOWLEDGE: K1.01 [2.1/2.5]
QID: B3492

A reactor is operating at steady-state 80 percent power with the radial power distribution peaked in the center of the core. Reactor power is then decreased to 60 percent over the next two hours by (1) reducing reactor recirculation flow rate by 10 percent, and (2) partially inserting a group of centrally-located deep control rods.

Compared with the previous operation at 80 percent power, when power is stabilized at 60 percent the value of the core maximum radial peaking factor will be _____; and the primary contributor to the change in the value of the core maximum radial peaking factor will be the change in _____.

A. smaller; recirculation flow

B. smaller; control rod position

C. larger; recirculation flow

D. larger; control rod position

ANSWER: B.

TOPIC: 293009
KNOWLEDGE: K1.02 [2.2/2.6]
QID: B892

The axial peaking factor for a node of a fuel bundle is expressed mathematically as...

A. $\frac{\text{core average bundle power}}{\text{peak nodal power}}$

B. $\frac{\text{peak nodal power}}{\text{core average bundle power}}$

C. $\frac{\text{bundle average nodal power}}{\text{nodal power}}$

D. $\frac{\text{nodal power}}{\text{bundle average nodal power}}$

ANSWER: D.

TOPIC: 293009
KNOWLEDGE: K1.03 [2.1/2.5]
QID: B1492

The ratio of the highest pin heat flux in a node to the average pin heat flux in the same node is called the _____ peaking factor.

A. local

B. radial

C. axial

D. total

ANSWER: A.

TOPIC: 293009
KNOWLEDGE: K1.04 [2.2/2.6]
QID: B3294

A BWR core consists of 30,000 fuel rods; each fuel rod has an active length of 12 feet. The core is producing 1,800 MW of thermal power. If the total peaking factor for a node is 2.0, what is the maximum local linear power density being produced in the node?

A. 4.0 kW/ft

B. 6.0 kW/ft

C. 8.0 kW/ft

D. 10.0 kW/ft

ANSWER: D.

TOPIC: 293009
KNOWLEDGE: K1.04 [2.2/2.6]
QID: B3793

A BWR core consists of 30,000 fuel rods. Each fuel rod has an active length of 12 feet. The core is producing 1,800 MW of thermal power. If the total peaking factor for a node is 1.6, what is the maximum local linear power density being produced in the node?

A. 4.0 kW/ft

B. 6.0 kW/ft

C. 8.0 kW/ft

D. 10.0 kW/ft

ANSWER: C.

TOPIC: 293009
KNOWLEDGE: K1.04 [2.2/2.6]
QID: B4447

A reactor is operating at its licensed thermal limit of 2,200 MW. The linear heat generation rate (LHGR) limit is 13.0 kW/ft.

Given:

- The reactor core contains 560 fuel bundles.
- Each bundle contains 62 fuel rods, each with an active length of 12.5 feet
- The highest total peaking factors are at the following core locations:

  Location A: 2.9
  Location B: 2.7
  Location C: 2.5
  Location D: 2.3

Which one of the following describes the operating condition of the core relative to the LHGR limit?

A. All locations in the core are operating below the LHGR limit.

B. Only location A has exceeded the LHGR limit while the remainder of the core is operating below the limit.

C. Locations A and B have exceeded the LHGR limit while the remainder of the core is operating below the limit.

D. Locations A, B, and C have exceeded the LHGR limit while the remainder of the core is operating below the limit.

ANSWER: C.

TOPIC: 293009
KNOWLEDGE: K1.04 [2.2/2.6]
QID: B4948

A BWR core consists of 30,000 fuel rods; each fuel rod has an active length of 12 feet. The core is producing 1,350 MW of thermal power. If the total peaking factor for a node is 1.6, what is the maximum local linear power density being produced in the node?

A. 4.0 kW/ft

B. 6.0 kW/ft

C. 8.0 kW/ft

D. 10.0 kW/ft

ANSWER: B.

TOPIC: 293009
KNOWLEDGE: K1.04 [2.2/2.6]
QID: B5247

A reactor is operating at 3,400 MW thermal power. The linear heat generation rate (LHGR) limit is 14.7 kW/ft.

Given:

- The reactor core contains 640 fuel bundles.
- Each bundle contains 62 fuel rods, each with an active length of 12.5 feet
- The highest total peaking factors are at the following core locations:

  Location A: 2.4
  Location B: 2.3
  Location C: 2.2
  Location D: 2.1

Which one of the following describes the operating conditions in the core relative to the LHGR limit?

A. All locations in the core are operating below the LHGR limit.

B. Location A has exceeded the LHGR limit while the remainder of the core is operating below the limit.

C. Locations A and B have exceeded the LHGR limit while the remainder of the core is operating below the limit.

D. Locations A, B, and C have exceeded the LHGR limit while the remainder of the core is operating below the limit.

ANSWER: D.

TOPIC: 293009
KNOWLEDGE: K1.04 [2.2/2.6]
QID: B6247 (P6249)

A reactor is operating at steady-state conditions in the power range with the following average temperatures in a core plane:

$T_{coolant}$ = 550°F
$T_{fuel\ centerline}$ = 1,680°F

Assume that the fuel rod heat transfer coefficients and reactor coolant temperatures are equal throughout the core plane. If the maximum total peaking factor in the core plane is 2.1, what is the maximum fuel centerline temperature in the core plane?

A. 2,923°F

B. 3,528°F

C. 4,078°F

D. 4,683°F

ANSWER: A.

TOPIC: 293009
KNOWLEDGE: K1.05 [3.3/3.5]
QID: B1893 (P1395)

Thermal limits are established to protect the reactor, and thereby protect the public during nuclear power plant operations, which include...

A. normal operations only.

B. normal and abnormal operations only.

C. normal, abnormal, and postulated accident operations only.

D. normal, abnormal, postulated and unpostulated accident operations.

ANSWER: C.

TOPIC: 293009
KNOWLEDGE: K1.06 [3.4/3.8]
QID: B94

Linear heat generation rate is the...

A. ratio of the average power per fuel rod divided by the associated fuel bundle power.

B. ratio of the power produced in a given fuel bundle divided by total core thermal power.

C. sum of the power produced by all fuel rods in a given fuel bundle at a specific planar cross section.

D. sum of the power per unit area for each unit area of the fuel cladding for a unit length of a fuel rod.

ANSWER: D.

TOPIC: 293009
KNOWLEDGE: K1.06 [3.4/3.8]
QID: B296

The linear heat generation rate (LHGR) for a reactor core is acceptable if _____ is being maintained at _____.

A. $LHGR_{limit}/LHGR_{measured}$; 0.95

B. $LHGR_{measured}/LHGR_{limit}$; 1.05

C. $LHGR_{limit}/LHGR_{measured}$; 1.10

D. $LHGR_{measured}/LHGR_{limit}$; 1.15

ANSWER: C.

TOPIC: 293009
KNOWLEDGE: K1.07 [2.8/3.6]
QID: B295

Operating a reactor below the linear heat generation rate thermal limit prevents...

A. cracking of the fuel cladding, due to high stress from fuel pellet expansion.

B. melting of the fuel cladding, due to cladding temperature exceeding 2,200°F during an anticipated transient without a scram.

C. cracking of the fuel cladding, due to a lack of cooling caused by departure from nucleate boiling.

D. melting of the fuel cladding, due to a lack of cooling following a loss of coolant accident.

ANSWER: A.

TOPIC: 293009
KNOWLEDGE: K1.07 [2.8/3.6]
QID: B392

Which one of the following limits takes into consideration fuel pellet swell effects?

A. Average gain adjustment factor

B. Maximum linear heat generation rate

C. Rated thermal power

D. Minimum critical power ratio

ANSWER: B.

TOPIC: 293009
KNOWLEDGE: K1.07 [2.8/3.6]
QID: B894

Which one of the following must be maintained within the technical specification limit to ensure that fuel cladding plastic strain (deformation) is limited to 1 percent?

A. Average planar linear heat generation rate

B. Linear heat generation rate

C. Minimum critical power ratio safety limit

D. Minimum critical power ratio operating limit

ANSWER: B.

TOPIC: 293009
KNOWLEDGE: K1.07 [2.8/3.6]
QID: B1093

Which one of the following is responsible for the fuel cladding failure that results from operating the reactor above the limit for linear heat generation rate?

A. Fission product gas expansion causes fuel rod internal design pressure to be exceeded.

B. Corrosion buildup on the cladding surface reduces heat transfer and promotes transition boiling.

C. The zircaloy-steam reaction causes accelerated oxidation of the cladding at high temperatures.

D. The difference between thermal expansion rates of the fuel pellets and the cladding causes severe stress.

ANSWER: D.

TOPIC: 293009
KNOWLEDGE: K1.07 [2.8/3.6]
QID: B1692

Maintaining the linear heat generation rate below the thermal limit ensures that...

A. peak cladding temperature after a design basis loss of coolant accident will not exceed 2,200°F.

B. during transients, more than 99.97 percent of the fuel rods will avoid transition boiling.

C. plastic strain of the cladding will not exceed 1 percent.

D. peaking factors will not exceed those assumed in the safety analysis.

ANSWER: C.

TOPIC: 293009
KNOWLEDGE: K1.08 [3.0/3.4]
QID: B592

If the linear heat generation rate (LHGR) limiting condition for operation is exceeded, the most probable type of fuel cladding failure is...

A. cracking, due to high stress.

B. gross failure, due to a lack of cooling.

C. embrittlement, due to excessive oxidation.

D. distortion, due to inadequate cooling.

ANSWER: A.

TOPIC: 293009
KNOWLEDGE: K1.10 [3.3/3.7]
QID: B297

The amount of heat stored in the fuel, resulting from the operating kW/foot in the fuel prior to a scram, is measured by the...

A. average planar linear heat generation rate (APLHGR).

B. linear heat generation rate (LHGR) multiplied by the total peaking factor.

C. core fraction of limiting power density.

D. APLHGR-to-MAPLHGR ratio.

ANSWER: A.

TOPIC: 293009
KNOWLEDGE: K1.11 [2.8/3.6]
QID: B195

Which one of the following must be maintained within limits to ensure that peak cladding temperature will not exceed 2,200°F after a design basis loss of coolant accident?

A. Linear heat generation rate

B. Average planar linear heat generation rate

C. Minimum critical power ratio

D. Maximum fraction of limiting critical power ratio

ANSWER: B.

TOPIC: 293009
KNOWLEDGE: K1.11 [2.8/3.6]
QID: B1393

Maintaining the average planar linear heat generation rate (APLHGR) below the technical specification limit ensures that...

A. plastic strain (deformation) of the cladding will not exceed 1 percent.

B. axial peaking factors will not exceed those assumed in the safety analyses.

C. during transients, more than 99.9 percent of the fuel rods are expected to avoid transition boiling.

D. cladding temperature after a design basis loss of coolant accident will not exceed 2,200°F.

ANSWER: D.

TOPIC: 293009
KNOWLEDGE: K1.11 [2.8/3.6]
QID: B1793 (P396)

The 2,200°F maximum fuel cladding temperature limit is imposed because...

A. 2,200°F is approximately 500°F below the fuel cladding melting temperature.

B. the rate of the zircaloy-steam reaction increases significantly at temperatures above 2,200°F.

C. any cladding temperature higher than 2,200°F correlates to a fuel centerline temperature above the fuel melting point.

D. the thermal conductivity of zircaloy decreases rapidly at temperatures above 2,200°F.

ANSWER: B.

TOPIC: 293009
KNOWLEDGE: K1.11 [2.8/3.6]
QID: B2194 (P2194)

Which one of the following describes the basis for the 2,200°F maximum fuel cladding temperature limit?

A. 2,200°F is approximately 500°F below the fuel cladding melting temperature.

B. The material strength of zircaloy decreases rapidly at temperatures above 2,200°F.

C. The rate of the zircaloy-water reaction increases significantly at temperatures above 2,200°F.

D. At the normal operating pressure of the reactor vessel, a cladding temperature above 2,200°F indicates that the critical heat flux has been exceeded.

ANSWER: C.

TOPIC: 293009
KNOWLEDGE: K1.11 [2.8/3.6]
QID: B2292 (P2995)

Which one of the following describes the basis for the 2,200°F maximum fuel cladding temperature limit?

A. 2,200°F is approximately 500°F below the fuel cladding melting temperature.

B. The rate of the zircaloy-steam reaction increases significantly above 2,200°F.

C. If fuel cladding temperature reaches 2,200°F, the onset of transition boiling is imminent.

D. The differential expansion between the fuel pellets and the fuel cladding becomes excessive at temperatures greater than 2,200°F.

ANSWER: B.

TOPIC: 293009
KNOWLEDGE: K1.12 [3.1/3.6]
QID: B2595

If a reactor is operating above its maximum average planar linear heat generation rate (MAPLHGR) prior to a loss of coolant accident, fuel pellet centerline temperature may reach 4,200°F and fuel cladding temperature may reach 2,300°F during the accident.

Which one of the following describes the likely cladding failure mechanism?

A. Excessive fuel pellet expansion

B. Excessive plastic strain in the cladding

C. Excessive embrittlement of the cladding

D. Excessive cadmium and iodine attack on the cladding

ANSWER: C.

TOPIC: 293009
KNOWLEDGE: K1.13 [3.1/3.6]
QID: B97

Operating a reactor within the limits specified by the maximum average planar linear heat generation rate (MAPLHGR) prevents...

A. exceeding 1 percent plastic strain in the cladding.

B. exceeding a peak fuel temperature of 2,200°F.

C. the onset of transition boiling in the upper core.

D. exceeding a peak cladding temperature of 2,200°F.

ANSWER: D.

TOPIC: 293009
KNOWLEDGE: K1.13 [3.1/3.6]
QID: B896

Which one of the following is indicated when the average planar linear heat generation rate (APLHGR)-to-maximum APLHGR ratio is less than 1.0?

A. Linear heat generation rate (LHGR) limit has not been exceeded.

B. LHGR limit has been exceeded.

C. APLGHR limit has not been exceeded.

D. APLGHR limit has been exceeded.

ANSWER: C.

TOPIC: 293009
KNOWLEDGE: K1.13 [3.1/3.6]
QID: B1595

Which one of the following is indicated when the maximum average power ratio (MAPRAT) is greater than 1.0?

A. The linear heat generation rate (LHGR) limit has not been exceeded.

B. The average planar linear heat generation rate (APLHGR) limit has not been exceeded.

C. The LHGR limit has been exceeded.

D. The APLHGR limit has been exceeded.

ANSWER: D.

TOPIC: 293009
KNOWLEDGE: K1.13 [3.1/3.6]
QID: B1795

Which one of the following is indicated when the maximum average power ratio (MAPRAT) is less than 1.0?

A. The linear heat generation rate (LHGR) limit has been exceeded.

B. The average planar linear heat generation rate (APLHGR) limit has been exceeded.

C. The APLHGR limit has <u>not</u> been exceeded.

D. The LHGR limit has <u>not</u> been exceeded.

ANSWER: C.

TOPIC: 293009
KNOWLEDGE: K1.14 [2.2/2.7]
QID: B393

At high core exposures, the maximum average planar linear heat generation rate (MAPLHGR) limit decreases with increasing core exposure. What is the reason for this decrease?

A. Cracking of fuel pellets at higher core exposures permits additional volume for fission product gases.

B. The zirconium-steam chemical reaction in cladding requires higher temperatures at higher core exposures.

C. Fission product decay heat level decreases at higher core exposures.

D. Fission product gases lower the overall heat transfer coefficient of the fuel rod fill gas.

ANSWER: D.

TOPIC: 293009
KNOWLEDGE: K1.15 [2.6/3.1]
QID: B792

During a loss of coolant accident, which one of the following modes of heat transfer provides the most core cooling when fuel rods are not in contact with the coolant?

A. Radiation

B. Emission

C. Convection

D. Conduction

ANSWER: A.

TOPIC: 293009
KNOWLEDGE: K1.16 [2.4/2.8]
QID: B394 (P383)

Refer to the drawing of a fuel rod and coolant flow channel (see figure below).

Given the following initial core parameters:

Reactor power = 100 percent
$T_{coolant}$ = 500°F
$T_{fuel\ centerline}$ = 3,000°F

What would the fuel centerline temperature be if the total fuel-to-coolant thermal conductivity doubled? (Assume reactor power and $T_{coolant}$ are constant.)

A. 1,000°F

B. 1,250°F

C. 1,500°F

D. 1,750°F

ANSWER: D.

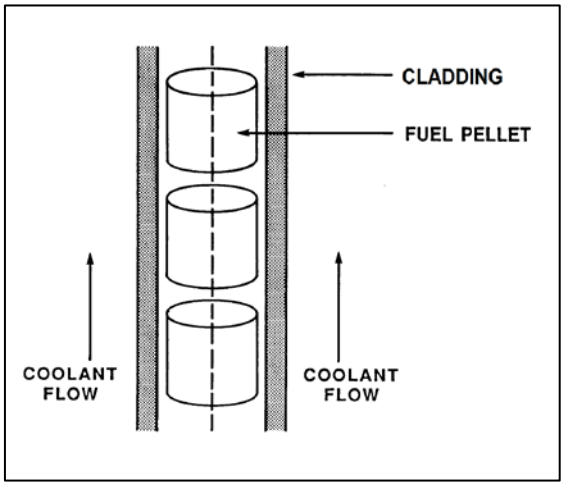

TOPIC: 293009
KNOWLEDGE: K1.16 [2.4/2.8]
QID: B495 (P495)

Refer to the drawing of a fuel rod and coolant flow channel (see figure below).

Given the following initial core parameters:

Reactor power = 100 percent
$T_{coolant}$ = 500°F
$T_{fuel\ centerline}$ = 2,500°F

What would the fuel centerline temperature be if the total fuel-to-coolant thermal conductivity doubled? (Assume reactor power and $T_{coolant}$ are constant.)

A. 1,250°F

B. 1,300°F

C. 1,400°F

D. 1,500°F

ANSWER: D.

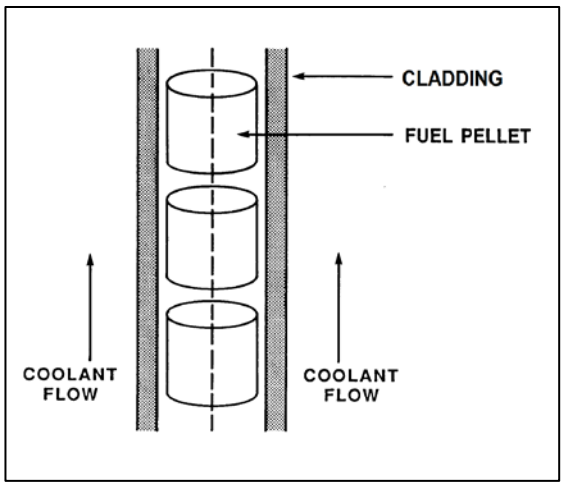

TOPIC: 293009
KNOWLEDGE: K1.16 [2.4/2.8]
QID: B1395 (P1894)

Which one of the following describes the fuel-to-coolant thermal conductivity for a fuel rod at the end of a fuel cycle (EOC) when compared to the beginning of the same fuel cycle (BOC)?

A. Smaller at EOL, due to fuel pellet densification.

B. Smaller at EOL, due to contamination of fill gas with fission product gases.

C. Larger at EOL, due to reduction in gap between the fuel pellets and cladding.

D. Larger at EOL, due to a greater temperature difference between the fuel pellets and coolant.

ANSWER: C.

TOPIC: 293009
KNOWLEDGE: K1.16 [2.4/2.8]
QID: B1594 (P1594)

Refer to the drawing of a fuel rod and coolant flow channel at (see figure below).

Given the following initial core parameters:

Reactor power = 100 percent
$T_{coolant}$ = 500°F
$T_{fuel\ centerline}$ = 2,700°F

What would the fuel centerline temperature be if the total fuel-to-coolant thermal conductivity doubled? (Assume reactor power and $T_{coolant}$ are constant.)

A. 1,100°F

B. 1,350°F

C. 1,600°F

D. 1,850°F

ANSWER: C.

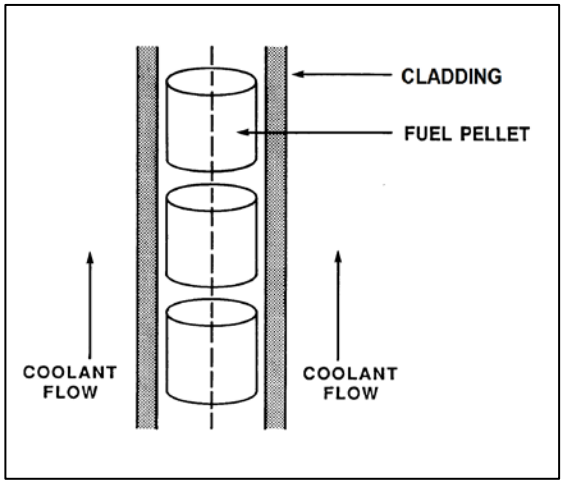

TOPIC: 293009
KNOWLEDGE: K1.16 [2.4/2.8]
QID: B1697 (P3395)

Refer to the drawing of a fuel rod and coolant flow channel (see figure below).

Given the following initial core parameters:

Reactor power = 50 percent
$T_{coolant}$ = 550°F
$T_{fuel\ centerline}$ = 2,750°F

What will the fuel centerline temperature be if the total fuel-to-coolant thermal conductivity doubles? (Assume reactor power and $T_{coolant}$ are constant.)

A. 1,100°F

B. 1,375°F

C. 1,525°F

D. 1,650°F

ANSWER: D.

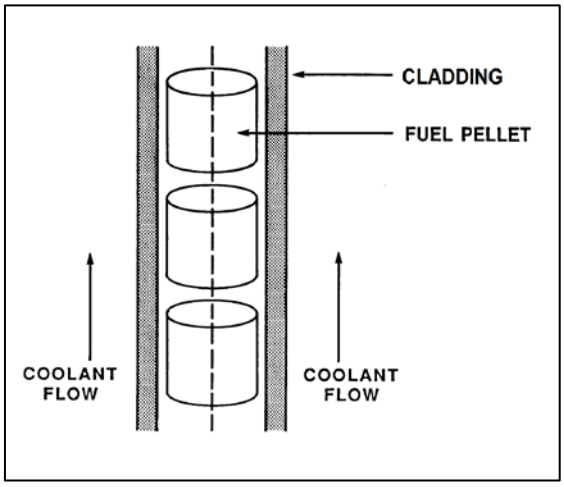

TOPIC: 293009
KNOWLEDGE: K1.16 [2.4/2.8]
QID: B1995 (P1994)

Refer to the drawing of a fuel rod and coolant flow channel (see figure below).

Given the following initial core parameters:

Reactor power = 80 percent
$T_{coolant}$ = 540°F
$T_{fuel\ centerline}$ = 2,540°F

What would the fuel centerline temperature be if the total fuel-to-coolant thermal conductivity doubled? (Assume reactor power and $T_{coolant}$ are constant.)

A. 1,270°F

B. 1,370°F

C. 1,440°F

D. 1,540°F

ANSWER: D.

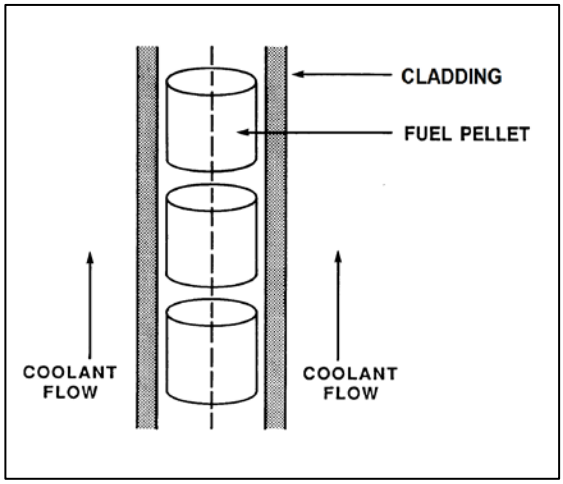

TOPIC: 293009
KNOWLEDGE: K1.16 [2.4/2.8]
QID: B2192 (P2195)

Which one of the following describes the fuel-to-coolant thermal conductivity for a fuel rod at the beginning of a fuel cycle (BOC) compared to the end of a fuel cycle (EOC)?

A. Larger at BOC, due to a higher fuel pellet density.

B. Larger at BOC, due to lower contamination of fuel rod fill gas with fission product gases.

C. Smaller at BOC, due to a larger gap between the fuel pellets and cladding.

D. Smaller at BOC, due to a smaller corrosion film on the surface of the fuel rods.

ANSWER: C.

TOPIC: 293009
KNOWLEDGE: K1.16 [2.4/2.8]
QID: B2394 (P2395)

Refer to the drawing of a fuel rod and coolant flow channel (see figure below).

The reactor is shut down with the following parameter values:

$T_{coolant}$ = 320°F
$T_{fuel\ centerline}$ = 780°F

What would the fuel centerline temperature be if the total fuel-to-coolant thermal conductivity doubled? (Assume core decay heat level and $T_{coolant}$ are constant.)

A. 550°F

B. 500°F

C. 450°F

D. 400°F

ANSWER: A.

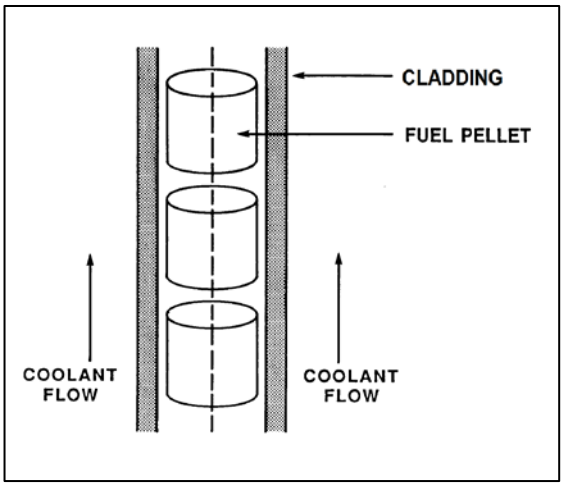

TOPIC: 293009
KNOWLEDGE: K1.16 [2.4/2.8]
QID: B2696 (P2296)

Refer to the drawing of a fuel rod and coolant flow channel (see figure below).

Given the following initial core parameters:

Reactor power = 60 percent
$T_{coolant}$ = 560°F
$T_{fuel\ centerline}$ = 2,500°F

What would the fuel centerline temperature be if the total fuel-to-coolant thermal conductivity doubled? (Assume reactor power and $T_{coolant}$ are constant.)

A. 1,080°F

B. 1,250°F

C. 1,530°F

D. 1,810°F

ANSWER: C.

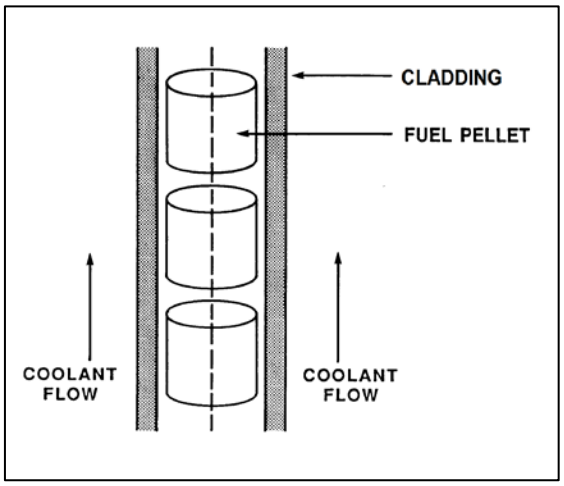

TOPIC: 293009
KNOWLEDGE: K1.16 [2.4/2.8]
QID: B2794

Given the following initial core parameters for a segment of a fuel rod:

Power density = 2 kW/ft
$T_{coolant}$ = 540°F
$T_{fuel\ centerline}$ = 1,200°F

Reactor power is increased such that the following core parameters now exist for the fuel rod segment:

Power density = 3 kW/ft
$T_{coolant}$ = 540°F
$T_{fuel\ centerline}$ = ?

Assuming void fraction surrounding the fuel rod segment does <u>not</u> change, what will be the new stable $T_{fuel\ centerline}$?

A. 1,380°F

B. 1,530°F

C. 1,670°F

D. 1,820°F

ANSWER: B.

TOPIC: 293009
KNOWLEDGE: K1.16 [2.4/2.8]
QID: B2896

Given the following initial core parameters for a segment of a fuel rod:

Power density = 2 kW/ft
$T_{coolant}$ = 540°F
$T_{fuel\ centerline}$ = 1,800°F

Reactor power is increased such that the following core parameters now exist for the fuel rod segment:

Power density = 4 kW/ft
$T_{coolant}$ = 540°F
$T_{fuel\ centerline}$ = ?

Assuming void fraction surrounding the fuel rod segment does <u>not</u> change, what will be the new stable $T_{fuel\ centerline}$?

A. 2,520°F

B. 2,780°F

C. 3,060°F

D. 3,600°F

ANSWER: C.

TOPIC: 293009
KNOWLEDGE: K1.16 [2.4/2.8]
QID: B3193 (P3195)

Refer to the drawing of a fuel rod and coolant flow channel (see figure below).

The reactor is shut down at the beginning of a fuel cycle with the following average parameter values:

$T_{coolant}$ = 440°F
$T_{fuel\ centerline}$ = 780°F

What will the fuel centerline temperature be at the end of the fuel cycle with the same coolant temperature and reactor decay heat conditions if the total fuel-to-coolant thermal conductivity doubles?

A. 610°F

B. 580°F

C. 550°F

D. 520°F

ANSWER: A.

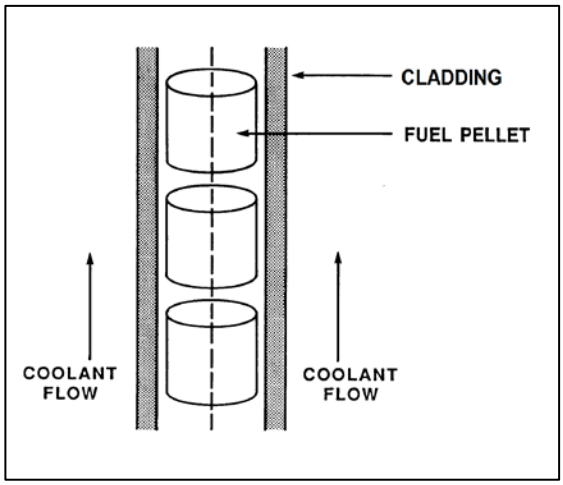

TOPIC: 293009
KNOWLEDGE: K1.16 [2.4/2.8]
QID: B3893

Refer to the drawing of a fuel rod and coolant flow channel (see figure below).

Given the following initial stable core parameters:

Reactor power = 50 percent
$T_{coolant}$ = 550°F
$T_{fuel\ centerline}$ = 1,250°F

Assume the total heat transfer coefficient and the reactor coolant temperature do not change. What will the stable fuel centerline temperature be if reactor power is increased to 75 percent?

A. 1,425°F

B. 1,600°F

C. 1,750°F

D. 1,875°F

ANSWER: B.

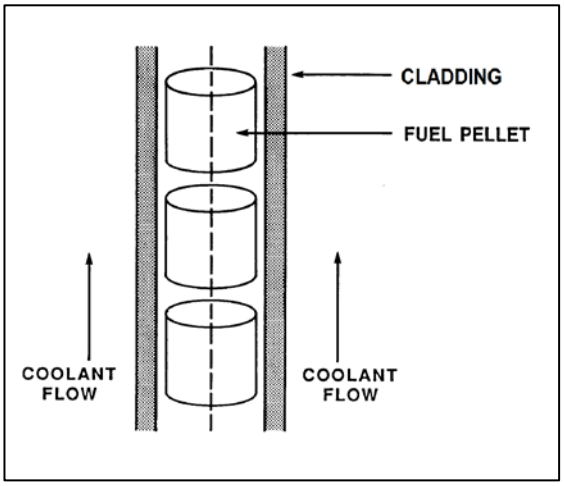

TOPIC: 293009
KNOWLEDGE: K1.17 [3.3/3.7]
QID: B145

The fuel bundle power that will cause the onset of transition boiling somewhere in the fuel bundle is the...

A. technical specification limit.

B. critical power.

C. maximum fraction of limiting power density.

D. maximum power density.

ANSWER: B.

TOPIC: 293009
KNOWLEDGE: K1.17 [3.3/3.7]
QID: B1997

Which one of the following is most likely to result in fuel cladding damage?

A. Operating at 110 percent of reactor vessel design pressure.

B. An inadvertent reactor scram from 100 percent power.

C. Operating with fuel bundle power greater than critical power.

D. Operating with saturated nucleate boiling occurring in a fuel bundle.

ANSWER: C.

TOPIC: 293009
KNOWLEDGE: K1.18 [3.2/3.7]
QID: B298

Which one of the following is a mathematical expression for the critical power ratio?

A. Critical power/Actual bundle power

B. Actual bundle power/Critical power

C. Average bundle power/Critical power

D. Critical power/Average bundle power

ANSWER: A.

TOPIC: 293009
KNOWLEDGE: K1.19 [2.8/3.6]
QID: B597

Which one of the following adverse conditions is avoided primarily by maintaining the minimum critical power ratio within specified limits?

A. Excessive plastic strain on the fuel cladding

B. Excessive cladding creep

C. Excessive decay heat in the fuel

D. Excessive fuel cladding temperatures

ANSWER: D.

TOPIC: 293009
KNOWLEDGE: K1.19 [2.8/3.6]
QID: B694

The purpose of maintaining the critical power ratio greater than 1.0 is to...

A. prevent fuel cladding failure during analyzed accident conditions.

B. avoid the onset of transition boiling during expected operating transients.

C. limit peak cladding temperatures to less than 2,200°F during analyzed accident conditions.

D. prevent melting at the fuel pellet centerline during expected operating transients.

ANSWER: B.

TOPIC: 293009
KNOWLEDGE: K1.19 [2.8/3.6]
QID: B798

Which thermal limit is maintained to ensure the core does <u>not</u> experience transition boiling?

A. Minimum critical power ratio

B. Maximum average planar linear heat generation ratio (MAPLHGR)

C. Maximum fraction of limiting power density

D. APLHGR-to-MAPLHGR ratio

ANSWER: A.

TOPIC: 293009
KNOWLEDGE: K1.19 [2.8/3.6]
QID: B2796

If a reactor is operating with the minimum critical power ratio (MCPR) at its transient limit (or safety limit), which one of the following is indicated?

A. None of the fuel rods are experiencing critical heat flux.

B. A small fraction of the fuel rods may be experiencing critical heat flux.

C. All radioactive fission products are being contained within the reactor fuel.

D. All radioactive fission products are being contained within either the reactor fuel or the reactor vessel.

ANSWER: B.

TOPIC: 293009
KNOWLEDGE: K1.20 [3.1/3.6]
QID: B1196

Bundle critical power ratio must be maintained _____ 1.0 to prevent fuel damage caused by a rapid increase in the temperature of the _____.

A. greater than; fuel pellets

B. less than; fuel pellets

C. greater than; fuel cladding

D. less than; fuel cladding

ANSWER: C.

TOPIC: 293009
KNOWLEDGE: K1.23 [2.8/3.2]
QID: B96

Which one of the following parameter changes will increase the critical power of a fuel bundle?

A. The subcooling of the coolant entering the bundle decreases.

B. The local peaking factor increases.

C. The coolant flow through the bundle increases.

D. The axial power peak shifts from the bottom to the top of the bundle.

ANSWER: C.

TOPIC: 293009
KNOWLEDGE: K1.23 [2.8/3.2]
QID: B2498

A nuclear power plant is operating at 90 percent power near the end of a fuel cycle when reactor recirculation flow rate suddenly decreases by 10 percent. Assuming the reactor does not scram immediately, critical power will initially _____; and reactor power will initially _____.

A. increase; increase

B. increase; decrease

C. decrease; increase

D. decrease; decrease

ANSWER: D.

TOPIC: 293009
KNOWLEDGE: K1.24 [2.7/3.2]
QID: B995

During normal power operations, a reactor pressure increase causes critical power to _____ because the latent heat of vaporization for the reactor coolant _____.

A. increase; decreases

B. decrease; decreases

C. increase; increases

D. decrease; increases

ANSWER: B.

TOPIC: 293009
KNOWLEDGE: K1.24 [2.7/3.2]
QID: B1297

A nuclear power plant is operating at 100 percent load when a turbine trip occurs with no steam bypass valve actuation. Assuming the reactor does not scram immediately, critical power ratio will initially...

A. increase, due to an increased latent heat of vaporization.

B. decrease, due to a decreased latent heat of vaporization.

C. increase, due to an increased reactor power.

D. decrease, due to a decreased reactor power.

ANSWER: B.

TOPIC: 293009
KNOWLEDGE: K1.24 [2.7/3.2]
QID: B2398

A nuclear power plant is operating at 90 percent power near the end of a fuel cycle when a turbine control system malfunction opens the turbine control valves an additional 5 percent. Assuming the reactor does not scram immediately, the critical power ratio will initially _____ due to a(n) _____ latent heat of vaporization for the reactor coolant.

A. increase; increased

B. increase; decreased

C. decrease; increased

D. decrease; decreased

ANSWER: A.

TOPIC: 293009
KNOWLEDGE: K1.24 [2.7/3.2]
QID: B2998

A nuclear power plant is operating at 90 percent power near the end of a fuel cycle when a signal error causes the turbine control system to throttle the turbine control valves 5 percent in the closed direction. Assuming the turbine control valves stabilize in their new position and the reactor does <u>not</u> scram, the critical power ratio will initially...

A. increase, because reactor power initially increases.

B. decrease, because reactor power initially decreases.

C. increase, because the reactor coolant latent heat of vaporization initially increases.

D. decrease, because the reactor coolant latent heat of vaporization initially decreases.

ANSWER: D.

TOPIC: 293009
KNOWLEDGE: K1.24 [2.7/3.2]
QID: B4749

A nuclear power plant is operating at 90 percent power at the end of core life when a signal error causes the turbine control system to open the turbine control valves an additional 5 percent. Assuming the reactor does not scram, the critical power ratio will initially...

A. increase, because reactor power initially increases.

B. decrease, because reactor power initially decreases.

C. increase, because the reactor coolant latent heat of vaporization initially increases.

D. decrease, because the reactor coolant latent heat of vaporization initially decreases.

ANSWER: C.

TOPIC: 293009
KNOWLEDGE: K1.26 [2.6/3.1]
QID: B897

For a reactor operating at 100 percent power, which one of the following combinations of axial power distribution and recirculation system flow rate will result in the smallest critical power ratio in a given fuel bundle? (Assume the maximum linear heat generation rate in the fuel bundle is the same for all cases.)

	Axial Power Distribution	Recirculation System Flow Rate
A.	Top-peaked	Low
B.	Top-peaked	High
C.	Bottom-peaked	Low
D.	Bottom-peaked	High

ANSWER: A.

TOPIC: 293009
KNOWLEDGE: K1.26 [2.6/3.1]
QID: B1396

If the axial power distribution in a fuel bundle shifts from bottom-peaked to top-peaked, the critical power will…

A. decrease to a new lower value.

B. decrease temporarily, then return to its initial value.

C. increase to a new higher value.

D. increase temporarily, then return to its initial value.

ANSWER: A.

TOPIC: 293009
KNOWLEDGE: K1.27 [2.7/3.3]
QID: B795

For what operational condition does the flow biasing correction factor (K_f) adjust the minimum critical power ratio?

A. Operation at less than rated steam flow.

B. Operation at greater than rated steam flow.

C. Operation at less than rated core flow.

D. Operation at greater than rated core flow.

ANSWER: C.

TOPIC: 293009
KNOWLEDGE: K1.29 [2.4/2.7]
QID: B996

The fuel thermal time constant describes the amount of time required for...

A. the fuel to change its rate of heat generation by 63 percent.

B. the fuel centerline temperature to undergo 63 percent of its total change resulting from a given power change.

C. the fuel cladding temperature to undergo 63 percent of its total change resulting from a given change in fuel temperature.

D. reactor power to undergo 63 percent of its total change resulting from a given reactivity insertion.

ANSWER: C.

TOPIC: 293009
KNOWLEDGE: K1.29 [2.4/2.7]
QID: B2496

The fuel thermal time constant specifies the amount of time required for...

A. a fuel bundle to achieve equilibrium temperature following a power change.

B. a fuel pellet to achieve equilibrium temperature following a power change.

C. the fuel centerline temperature to undergo most of its total change following a power change.

D. the fuel cladding temperature to undergo most of its total change following a power change.

ANSWER: D.

TOPIC: 293009
KNOWLEDGE: K1.30 [2.3/2.7]
QID: B1596

A step increase in reactor power results in a fuel cladding surface temperature increase from 550°F to 580°F at steady-state conditions. The fuel thermal time constant is 6 seconds.

Which one of the following is the approximate fuel cladding surface temperature 6 seconds after the power change?

A. 571°F

B. 569°F

C. 565°F

D. 561°F

ANSWER: B.

TOPIC: 293009
KNOWLEDGE: K1.30 [2.3/2.7]
QID: B2095

A step increase in reactor power results in a fuel cladding surface temperature increase from 560°F to 590°F. The fuel thermal time constant is 6 seconds.

Which one of the following is the approximate fuel cladding surface temperature 6 seconds after the power change?

A. 579°F

B. 575°F

C. 570°F

D. 567°F

ANSWER: A.

TOPIC: 293009
KNOWLEDGE: K1.30 [2.3/2.7]
QID: B2193

A step increase in reactor power results in a fuel rod surface temperature increase from 555°F to 585°F at steady state conditions. The fuel thermal time constant is 6 seconds.

Which one of the following is the approximate fuel rod surface temperature 6 seconds after the power change?

A. 574°F

B. 570°F

C. 567°F

D. 563°F

ANSWER: A.

TOPIC: 293009
KNOWLEDGE: K1.30 [2.3/2.7]
QID: B2297

A step increase in reactor power will result in a fuel rod surface temperature increase from 570°F to 590°F at steady state conditions. The fuel thermal time constant is 6 seconds.

Which one of the following is the approximate fuel rod surface temperature 6 seconds after the power change?

A. 574°F

B. 577°F

C. 580°F

D. 583°F

ANSWER: D.

TOPIC: 293009
KNOWLEDGE: K1.31 [3.0/3.4]
QID: B396 (P394)

The pellet-to-cladding gap in fuel rod construction is designed to...

A. decrease fuel pellet densification and elongation.

B. reduce fission product gas pressure buildup.

C. increase heat transfer rate.

D. reduce internal cladding strain.

ANSWER: D.

TOPIC: 293009
KNOWLEDGE: K1.32 [2.9/3.3]
QID: B99

Which one of the following describes why the threshold power for pellet-clad interaction changes as fuel burnup increases?

A. The fuel pellet thermal conductivity is reduced significantly by irradiation.

B. Zirconium hydriding increases significantly as the oxide layer builds up on the cladding.

C. The buildup of certain fission product gases causes chemical embrittlement of the cladding.

D. Fuel pellet densification causes the middle of the pellet to expand outward against the cladding as the pellet length shrinks.

ANSWER: C.

TOPIC: 293009
KNOWLEDGE: K1.32 [2.9/3.3]
QID: B497

The presence of embrittling isotopes is one of the initiating factors of pellet-cladding interaction. Which one of the following describes the primary source of the embrittling isotopes?

A. Created during fission of the reactor fuel.

B. Introduced during the fuel manufacturing process.

C. Migrates from the reactor coolant through the cladding.

D. Produced as corrosion products inside the fuel rod.

ANSWER: A.

TOPIC: 293009
KNOWLEDGE: K1.32 [2.9/3.3]
QID: B2195

Which one of the following operations is most likely to cause significant pellet-cladding interaction?

A. Increasing reactor power from 20 percent to 50 percent near the beginning of a fuel cycle.

B. Increasing reactor power from 20 percent to 50 percent near the end of a fuel cycle.

C. Increasing reactor power from 70 percent to 100 percent near the beginning of a fuel cycle.

D. Increasing reactor power from 70 percent to 100 percent near the end of a fuel cycle.

ANSWER: D.

TOPIC: 293009
KNOWLEDGE: K1.33 [2.4/2.8]
QID: B796

Which one of the following is the primary purpose of the gap between the fuel pellets and the cladding.

A. Prevent contact between the fuel pellets and the cladding.

B. Increase heat transfer from the fuel pellets to the cladding.

C. Accommodate different expansion rates between the fuel pellets and the cladding.

D. Reduce diffusion of fission product gases through the cladding into the reactor coolant.

ANSWER: C.

TOPIC: 293009
KNOWLEDGE: K1.33 [2.4/2.8]
QID: B1696

What is the primary purpose of the gap between a fuel pellet and the surrounding cladding?

A. To allow insertion of fuel pellets into the fuel rods.

B. To provide a collection volume for fission product gases.

C. To maintain the design fuel thermal conductivity throughout the fuel cycle.

D. To accommodate different expansion rates in the fuel pellets and the cladding.

ANSWER: D.

TOPIC: 293009
KNOWLEDGE: K1.34 [2.3/2.6]
QID: B797

Which one of the following causes a reduction in the size of the gap between the fuel pellets and the fuel cladding over core life.

A. Contraction of the fuel rod, due to zirconium hydriding.

B. Expansion of the fuel pellets, due to fission product buildup.

C. Contraction of the fuel rod, due to fuel rod internal vacuum.

D. Expansion of the fuel pellets, due to densification.

ANSWER: B.

TOPIC: 293009
KNOWLEDGE: K1.34 [2.3/2.6]
QID: B6449 (P6449)

Consider a new fuel rod operating at a constant power level for several weeks. During this period, fuel pellet densification in the fuel rod causes the heat transfer rate from the fuel pellets to the cladding to _____; this change causes the average fuel temperature in the fuel rod to _____.

A. decrease; increase

B. decrease; decrease

C. increase; increase

D. increase; decrease

ANSWER: A.

TOPIC: 293009
KNOWLEDGE: K1.35 [2.2/2.6]
QID: B397

Studies of nuclear fuel rod damage revealed that two essential criteria for pellet-cladding interaction fuel damage are cladding stress and an embrittling interaction between two chemical agents and the zircaloy cladding.

What are the two chemical agents?

A. Iodine and cadmium

B. Cadmium and bromine

C. Bromine and ruthenium

D. Ruthenium and iodine

ANSWER: A.

TOPIC: 293009
KNOWLEDGE: K1.40 [2.8/3.3]
QID: B696

Gross cladding failure is avoided during a design basis loss of coolant accident by operation below the limit for...

A. total peaking factor.

B. linear heat generation rate.

C. operating critical power ratio.

D. average planar linear heat generation rate.

ANSWER: D.

TOPIC: 293009
KNOWLEDGE: K1.40 [2.8/3.3]
QID: B1497

Gross fuel cladding failure during a design basis loss of coolant accident is prevented by adhering to the...

A. linear heat generation rate limit.

B. maximum average planar linear heat generation rate limit.

C. minimum critical power ratio limit.

D. preconditioning interim operating management recommendations.

ANSWER: B.

TOPIC: 293009
KNOWLEDGE: K1.41 [2.8/3.3]
QID: B697

During a rapid increase in core flow for a reactor operating at 100 percent power, the most limiting thermal limit is the...

A. total peaking factor.

B. critical power ratio.

C. average planar linear heat generation rate.

D. linear heat generation rate.

ANSWER: B.

TOPIC: 293009
KNOWLEDGE: K1.41 [2.8/3.3]
QID: B1098

A nuclear power plant is operating at 60 percent reactor power. Which one of the following will result in the highest critical power ratio? (Assume neutron flux distribution does not change.)

A. A 25 percent power increase using only recirculation flow.

B. A 25 percent power increase using only control rods.

C. A 25 percent power decrease using only recirculation flow.

D. A 25 percent power decrease using only control rods.

ANSWER: D.

TOPIC: 293009
KNOWLEDGE: K1.41 [2.8/3.3]
QID: B1598

A nuclear power plant is operating at 60 percent reactor power. Which one of the following will result in the lowest critical power ratio? (Assume core neutron flux distribution does not change.)

A. A 25 percent power increase using only control rods.

B. A 25 percent power decrease using only control rods.

C. A 25 percent power increase using only recirculation flow.

D. A 25 percent power decrease using only recirculation flow.

ANSWER: A.

TOPIC: 293009
KNOWLEDGE: K1.42 [2.8/3.3]
QID: B498

In a reactor operating at 100 percent power, reactor pressure suddenly increases. Which one of the following is the most limiting thermal limit for these conditions?

A. Linear heat generation rate

B. Average planar linear heat generation rate

C. Critical power ratio

D. Preconditioning interim operating management recommendations

ANSWER: C.

TOPIC: 293009
KNOWLEDGE: K1.43 [2.9/3.4]
QID: B698

If cold water is suddenly injected into the reactor vessel while operating at 50 percent power, critical power will initially _____; and bundle power will initially _____.

A. increase; increase

B. decrease; increase

C. increase; decrease

D. decrease; decrease

ANSWER: A.

TOPIC: 293009
KNOWLEDGE: K1.43 [2.9/3.4]
QID: B1298

If reactor feedwater temperature suddenly decreases by 10°F during operation at 75 percent power, critical power will initially _____; and bundle power will initially

A. increase; increase

B. decrease; increase

C. increase; decrease

D. decrease; decrease

ANSWER: A.

TOPIC: 293009
KNOWLEDGE: K1.43 [2.9/3.4]
QID: B1498

The most limiting thermal limit for a loss of feedwater heating transient is the...

A. average planar linear heat generation rate.

B. linear heat generation rate.

C. critical power ratio.

D. core thermal power.

ANSWER: C.

TOPIC: 293009
KNOWLEDGE: K1.43 [2.9/3.4]
QID: B2298

If reactor feedwater temperature suddenly increases by 10°F during operation at 75 percent power, critical power will initially _____; and bundle power will initially _____.

A. increase; increase

B. increase; decrease

C. decrease; increase

D. decrease; decrease

ANSWER: D.

TOPIC: 293010
KNOWLEDGE: K1.01 [2.4/2.8]
QID: B499 (P497)

Which one of the following comparisons will result in a higher probability for brittle fracture of the reactor vessel?

A. A high gamma flux in the reactor rather than a high neutron flux.

B. A high material strength in the reactor vessel rather than a high ductility.

C. A high oxygen content in the reactor coolant rather than a low oxygen content.

D. A rapid 100°F reactor cooldown at a high temperature rather than at a low temperature.

ANSWER: B.

TOPIC: 293010
KNOWLEDGE: K1.01 [2.4/2.8]
QID: B2499 (P2496)

Brittle fracture of a low-carbon steel is more likely to occur when the temperature of the steel is _____ the nil-ductility transition temperature; and can occur when the applied stress is _____ the steel's yield strength (or yield stress).

A. less than; less than

B. less than; greater than

C. greater than; less than

D. greater than; greater than

ANSWER: A.

TOPIC: 293010
KNOWLEDGE: K1.02 [2.2/2.7]
QID: B1299 (P1896)

Brittle fracture of the reactor vessel (RV) is most likely to occur during a reactor _____ when RV temperature is _____ the nil-ductility transition temperature.

A. cooldown; above

B. heatup; above

C. cooldown; below

D. heatup; below

ANSWER: C.

TOPIC: 293010
KNOWLEDGE: K1.02 [2.2/2.7]
QID: B1500 (P697)

The nil-ductility transition temperature is the temperature above which...

A. a large compressive stress can result in brittle fracture.

B. a metal exhibits more ductile tendencies.

C. the probability of brittle fracture increases.

D. no appreciable deformation occurs prior to failure.

ANSWER: B.

TOPIC: 293010
KNOWLEDGE: K1.02 [2.2/2.7]
QID: B2099 (P2096)

Which one of the following will prevent brittle fracture failure of a reactor vessel?

A. Manufacturing the reactor vessel from low carbon steel.

B. Maintaining reactor vessel pressure below the maximum design limit.

C. Operating above the nil-ductility transition temperature.

D. Maintaining the number of reactor vessel heatup/cooldown cycles within limits.

ANSWER: C.

TOPIC: 293010
KNOWLEDGE: K1.02 [2.2/2.7]
QID: B2199 (P2295)

Brittle fracture of the reactor vessel (RV) is least likely to occur during a reactor _____ when RV temperature is _____ the nil-ductility transition temperature.

A. cooldown; above

B. heatup; above

C. cooldown; below

D. heatup; below

ANSWER: B.

TOPIC: 293010
KNOWLEDGE: K1.02 [2.2/2.7]
QID: B2299 (P996)

The nil-ductility transition temperature is that temperature...

A. below which vessel failure is imminent.

B. above which vessel failure is imminent.

C. below which the probability of brittle fracture significantly increases.

D. above which the probability of brittle fracture significantly increases.

ANSWER: C.

TOPIC: 293010
KNOWLEDGE: K1.02 [2.2/2.7]
QID: B2699 (P597)

The nil-ductility transition temperature of the reactor vessel (RV) is the temperature...

A. above which the RV metal will elastically deform as RV pressure decreases.

B. above which the RV metal loses its ability to elastically deform as RV pressure increases.

C. below which the RV metal will elastically deform as RV pressure decreases.

D. below which the RV metal loses its ability to elastically deform as RV pressure increases.

ANSWER: D.

TOPIC: 293010
KNOWLEDGE: K1.04 [2.9/3.2]
QID: B100 (P96)

The likelihood of brittle fracture failure of the reactor vessel is reduced by...

A. reducing gamma flux exposure.

B. reducing vessel temperature.

C. reducing vessel pressure.

D. increasing vessel age.

ANSWER: C.

TOPIC: 293010
KNOWLEDGE: K1.04 [2.9/3.2]
QID: B300 (P1897)

Which one of the following will apply a compressive stress to the outside wall of the reactor vessel?

A. Neutron embrittlement of the reactor vessel.

B. Increasing reactor pressure.

C. Performing a reactor cooldown.

D. Performing a reactor heatup.

ANSWER: C.

TOPIC: 293010
KNOWLEDGE: K1.04 [2.9/3.2]
QID: B398 (P397)

The conditions for brittle fracture of the reactor vessel are most closely approached at…

A. 400°F, 10 psig.

B. 400°F, 400 psig.

C. 120°F, 10 psig.

D. 120°F, 400 psig.

ANSWER: D.

TOPIC: 293010
KNOWLEDGE: K1.04 [2.9/3.2]
QID: B399 (P399)

The total stress on the reactor vessel inner wall is greater during cooldown than heatup because...

A. thermal stress during heatup totally offsets pressure stress at the inner wall.

B. both pressure stress and thermal stress are tensile at the inner wall during cooldown.

C. the tensile thermal stress at the inner wall is greater in magnitude than the compressive pressure stress at the same location during cooldown.

D. thermal stress during both cooldown and heatup is tensile at the inner wall, but the thermal stress during cooldown is greater in magnitude.

ANSWER: B.

TOPIC: 293010
KNOWLEDGE: K1.05 [2.5/2.8]
QID: B400 (P398)

The likelihood of reactor vessel brittle fracture is decreased by minimizing...

A. the oxygen content in the reactor coolant.

B. operation at high reactor coolant temperatures.

C. the time taken to cool down the reactor.

D. the amount of copper contained in the metal used for the reactor vessel.

ANSWER: D.

TOPIC: 293010
KNOWLEDGE: K1.04 [2.9/3.2]
QID: B899 (P97)

The pressure stress on a reactor vessel wall is...

A. tensile across the entire wall.

B. compressive across the entire wall.

C. tensile on the inner wall, compressive on the outer wall.

D. compressive on the inner wall, tensile on the outer wall.

ANSWER: A.

TOPIC: 293010
KNOWLEDGE: K1.04 [2.9/3.2]
QID: B1899 (P1597)

Which one of the following comparisons increases the probability for brittle fracture of a reactor vessel wall?

A. Using a vessel fabricated from stainless steel rather than carbon steel.

B. Subjecting the vessel wall to a compressive stress rather than a tensile stress.

C. A high reactor coolant temperature rather than a low reactor coolant temperature.

D. Performing a 100°F/hr cooldown of the reactor rather than a 100°F/hr heatup.

ANSWER: D.

TOPIC: 293010
KNOWLEDGE: K1.04 [2.9/3.2]
QID: B2300

A reactor plant heatup is in progress. The thermal stress applied to the reactor vessel wall is...

A. tensile across the entire wall.

B. tensile at the inner wall and compressive at the outer wall.

C. compressive across the entire wall.

D. compressive at the inner wall and tensile at the outer wall.

ANSWER: D.

TOPIC: 293010
KNOWLEDGE: K1.04 [2.9/3.2]
QID: B2399 (P2397)

Reactor pressure-temperature limit curves are derived by using a conservative value for the reactor vessel nil-ductility transition temperature (NDTT).

Early in core life, the conservative value of NDTT is _____ than actual NDTT; the actual NDTT is verified periodically over core life by _____.

A. higher; removing and testing irradiated specimens of reactor vessel material

B. higher; in-service inspection and analysis of the reactor vessel wall

C. lower; removing and testing irradiated specimens of reactor vessel material

D. lower; in-service inspection and analysis of the reactor vessel wall

ANSWER: A.

TOPIC: 293010
KNOWLEDGE: K1.04 [2.9/3.2]
QID: B2500 (P2497)

Which one of the following comparisons will result in a higher probability for brittle fracture of a reactor vessel?

A. A feedwater pH of 8.5 rather than 9.0

B. A high oxygen content in the feedwater rather than a low oxygen content.

C. A 50°F/hr reactor cooldown rather than a 100°F/hr heatup.

D. A high gamma flux in the reactor rather than a high neutron flux.

ANSWER: C.

TOPIC: 293010
KNOWLEDGE: K1.04 [2.9/3.2]
QID: B2700 (P1696)

Which one of the following comparisons increases the probability of brittle fracture for a reactor vessel wall?

A. Performing a 50°F/hr cooldown at 1,600 psia rather than a 50°F/hr cooldown at 1,200 psia.

B. A compressive stress across the vessel wall rather than a tensile stress.

C. A high reactor coolant temperature rather than a low reactor coolant temperature.

D. Changing the reactor vessel manufacturing process to increase toughness while maintaining the same yield strength.

ANSWER: A.

TOPIC: 293010
KNOWLEDGE: K1.04 [2.9/3.2]
QID: B2999

Which one of the following operating limitations is designed to prevent brittle fracture of the reactor vessel?

A. Maximum setpoint for the main steam safety valves.

B. Maximum chloride concentration in the reactor coolant.

C. Maximum reactor pressure versus vessel temperature during heatup.

D. Maximum differential temperature between the vessel steam dome and the bottom head.

ANSWER: C.

TOPIC: 293010
KNOWLEDGE: K1.04 [2.9/3.2]
QID: B3700 (P3698)

A reactor is shutdown with the shutdown cooling system maintaining reactor coolant temperature at 240°F immediately following an uncontrolled rapid cooldown from 500°F. If reactor coolant temperature is held constant at 240°F, which one of the following describes the change in tensile stress on the inner wall of the reactor vessel (RV) over the next few hours?

A. Decreases, because the temperature gradient across the RV wall will decrease.

B. Increases, because the temperature gradient across the RV wall will decrease.

C. Decreases, because the inner RV wall temperature will approach the nil-ductility transition temperature.

D. Increases, because the inner RV wall temperature will approach the nil-ductility transition temperature.

ANSWER: A.

TOPIC: 293010
KNOWLEDGE: K1.05 [2.5/2.8]
QID: B299 (P1997)

Which one of the following describes the effect of fast neutron irradiation on a reactor vessel?

A. Increased fatigue crack growth rate

B. Increased plastic deformation prior to failure

C. Increased ductility

D. Increased nil-ductility transition temperature

ANSWER: D.

TOPIC: 293010
KNOWLEDGE: K1.05 [2.5/2.8]
QID: B500 (P499)

Which one of the following types of radiation most significantly reduces the ductility of a reactor vessel?

A. Beta

B. Thermal neutrons

C. Gamma

D. Fast neutrons

ANSWER: D.

TOPIC: 293010
KNOWLEDGE: K1.05 [2.5/2.8]
QID: B599 (P298)

Prolonged exposure of a reactor vessel to a fast neutron flux will cause the nil-ductility transition temperature to...

A. decrease, due to the propagation of existing flaws.

B. increase, due to the propagation of existing flaws.

C. decrease, due to changes in the material properties of the vessel wall.

D. increase, due to changes in the material properties of the vessel wall.

ANSWER: D.

TOPIC: 293010
KNOWLEDGE: K1.05 [2.5/2.8]
QID: B1100 (P1100)

Two identical reactors have been in operation for the last 10 years. Reactor A has experienced 40 heatup/cooldown cycles with an average power capacity of 50 percent. Reactor B has experienced 30 heatup/cooldown cycles with an average power capacity of 60 percent.

Which reactor will have the lower reactor vessel nil-ductility transition temperature, and why?

A. Reactor A, due to the lower average power capacity.

B. Reactor A, due to the greater number of heatup/cooldown cycles.

C. Reactor B, due to the higher average power capacity.

D. Reactor B, due to the fewer number of heatup/cooldown cycles.

ANSWER: A.

TOPIC: 293010
KNOWLEDGE: K1.05 [2.5/2.8]
QID: B1200 (P1898)

Which one of the following is the major contributor to embrittlement of a reactor vessel?

A. High-energy fission fragments

B. High operating temperature

C. High-energy gamma radiation

D. High-energy neutron radiation

ANSWER: D.

TOPIC: 293010
KNOWLEDGE: K1.05 [2.5/2.8]
QID: B1800 (P1699)

Two identical reactors have been in operation for the last 10 years. Reactor A has experienced 30 heatup/cooldown cycles with an average power capacity of 60 percent. Reactor B has experienced 40 heatup/cooldown cycles with an average power capacity of 50 percent.

Which reactor will have the lower reactor vessel nil-ductility transition temperature, and why?

A. Reactor A, due to the higher average power capacity.

B. Reactor A, due to the fewer number of heatup/cooldown cycles.

C. Reactor B, due to the lower average power capacity.

D. Reactor B, due to the greater number of heatup/cooldown cycles.

ANSWER: C.

TOPIC: 293010
KNOWLEDGE: K1.05 [2.5/2.8]
QID: B1900 (P899)

After several years of operation, the maximum allowable stress to the reactor vessel is more limited by the inner wall than the outer wall because...

A. the inner wall operates at a higher temperature than the outer wall.

B. the inner wall has a smaller surface area than the outer wall.

C. the inner wall experiences more neutron-induced embrittlement than the outer wall.

D. the inner wall experiences more tensile stress than the outer wall.

ANSWER: C.

TOPIC: 293010
KNOWLEDGE: K1.05 [2.5/2.8]
QID: B1999 (P998)

Prolonged exposure to _____ will cause the nil-ductility transition temperature of the reactor vessel to _____.

A. neutron radiation; increase

B. neutron radiation; decrease

C. normal operating pressure; increase

D. normal operating pressure; decrease

ANSWER: A.

TOPIC: 293010
KNOWLEDGE: K1.05 [2.5/2.8]
QID: B2100 (P2098)

Two identical reactors have been in operation for the last 10 years. Reactor A has experienced 30 heatup/cooldown cycles and has an average power capacity of 60 percent. Reactor B has experienced 40 heatup/cooldown cycles and has an average power capacity of 50 percent.

Which reactor will have the <u>higher</u> reactor vessel nil-ductility transition temperature, and why?

A. Reactor A, due to the fewer number of heatup/cooldown cycles.

B. Reactor A, due to the higher average power capacity.

C. Reactor B, due to the greater number of heatup/cooldown cycles.

D. Reactor B, due to the lower average power capacity.

ANSWER: B.

TOPIC: 293010
KNOWLEDGE: K1.05 [2.5/2.8]
QID: B2600 (P2599)

Two identical reactors are currently shut down for refueling. Reactor A has an average lifetime power capacity of 60 percent and has been operating for 15 years. Reactor B has an average lifetime power capacity of 75 percent and has been operating for 12 years.

Which reactor, if any, will have the lower reactor vessel nil-ductility transition temperature, and why?

A. Reactor A, due to the lower average lifetime power capacity.

B. Reactor B, due to the higher average lifetime power capacity.

C. Both reactors will have approximately the same nil-ductility transition temperature because each reactor has produced approximately the same number of fissions.

D. Both reactors will have approximately the same nil-ductility transition temperature because fast neutron irradiation in a shutdown reactor is not significant.

ANSWER: C.

TOPIC: 293010
KNOWLEDGE: K1.05 [2.5/2.8]
QID: B2800 (P2799)

Two identical reactors have been in operation for the last 10 years. Reactor A has experienced 30 heatup/cooldown cycles and has an average power capacity of 60 percent. Reactor B has experienced 20 heatup/cooldown cycles and has an average power capacity of 80 percent.

Which reactor will have the higher reactor vessel nil-ductility transition temperature, and why?

A. Reactor A, due to the lower average power capacity.

B. Reactor A, due to the greater number of heatup/cooldown cycles.

C. Reactor B, due to the higher average power capacity.

D. Reactor B, due to the fewer number of heatup/cooldown cycles.

ANSWER: C.

TOPIC: 293010
KNOWLEDGE: K1.05 [2.5/2.8]
QID: B2900 (P2298)

Two identical reactors have been in operation for the last 10 years. Reactor A has experienced 40 heatup/cooldown cycles and has an average power capacity of 50 percent. Reactor B has experienced 30 heatup/cooldown cycles and has an average power capacity of 60 percent.

Which reactor will have the <u>higher</u> reactor vessel nil-ductility transition temperature, and why?

A. Reactor A, due to the greater number of heatup/cooldown cycles.

B. Reactor A, due to the lower average power capacity.

C. Reactor B, due to the fewer number of heatup/cooldown cycles.

D. Reactor B, due to the higher average power capacity.

ANSWER: D.

TOPIC: 293010
KNOWLEDGE: K1.05 [2.5/2.8]
QID: B3000 (P2698)

Two identical reactors are currently shut down for refueling. Reactor A has achieved an average lifetime power capacity of 60 percent while operating for 15 years. Reactor B has achieved an average lifetime power capacity of 60 percent while operating for 12 years.

Which reactor, if any, will have the <u>lower</u> reactor vessel nil-ductility transition temperature, and why?

A. Reactor A, because it has produced more total fissions.

B. Reactor B, because it has produced less total fissions.

C. Both reactors will have approximately the same nil-ductility transition temperature because they have equal average lifetime power capacities.

D. Both reactors will have approximately the same nil-ductility transition temperature because the fission rate in a shutdown reactor is <u>not</u> significant.

ANSWER: B.

TOPIC: 293010
KNOWLEDGE: K1.05 [2.5/2.8]
QID: B3200 (P3197)

A reactor is shut down for refueling following 18 months of operation at an average power level of 85 percent. During the shutdown, a reactor vessel metal specimen was removed from the reactor vessel for testing. The testing determined that the nil-ductility transition (NDT) temperature of the specimen decreased from 44°F to 42°F since the previous refueling shutdown.

Which one of the following conclusions is warranted?

A. The test results are credible and the reactor vessel is <u>more</u> likely to experience brittle fracture now than after the previous refueling shutdown.

B. The test results are credible and the reactor vessel is <u>less</u> likely to experience brittle fracture now than after the previous refueling shutdown.

C. The test results are questionable because the specimen NDT temperature would <u>not</u> decrease during the described 18-month period of operation.

D. The test results are questionable because the specimen NDT temperature would decrease by <u>more</u> than 2°F during the described 18-month period of operation.

ANSWER: C.

TOPIC: 293010
KNOWLEDGE: K1.05 [2.5/2.8]
QID: B3300 (P3297)

A reactor is shut down for refueling following 18 months of operation at an average power level of 85 percent. During the shutdown, a reactor vessel metal specimen was removed from the reactor vessel for testing. The testing determined that the nil-ductility transition (NDT) temperature of the specimen increased from 42°F to 44°F since the previous refueling shutdown.

Which one of the following conclusions is warranted?

A. The test results are credible and the reactor vessel is <u>more</u> susceptible to brittle fracture now than after the previous refueling shutdown.

B. The test results are credible and the reactor vessel is <u>less</u> susceptible to brittle fracture now than after the previous refueling shutdown.

C. The test results are questionable because the vessel NDT temperature would <u>not</u> increase during the described 18-month period of operation.

D. The test results are questionable because the vessel NDT temperature would increase by <u>at least</u> 10°F during the described 18-month period of operation.

ANSWER: A.

TOPIC: 293010
KNOWLEDGE: K1.05 [2.5/2.8]
QID: B3600 (P3598)

A reactor is shut down for refueling following 18 months of operation at an average power level of 85 percent. During the shutdown, a reactor vessel metal specimen is removed from the reactor vessel for testing. The testing indicates that the nil-ductility transition (NDT) temperature of the specimen has decreased from 44°F to 32°F since the previous refueling shutdown.

Which one of the following conclusions is warranted?

A. The test results are credible and the reactor vessel is <u>more</u> likely to experience brittle fracture now than after the previous refueling shutdown.

B. The test results are credible and the reactor vessel is <u>less</u> likely to experience brittle fracture now than after the previous refueling shutdown.

C. The test results are questionable because the actual specimen NDT temperature would <u>not</u> decrease during the described 18-month period of operation.

D. The test results are questionable because the actual specimen NDT temperature would decrease by much <u>less</u> than indicated by the test results.

ANSWER: C.

TOPIC: 293010
KNOWLEDGE: K1.05 [2.5/2.8]
QID: B3900 (P3898)

Two identical reactors are currently shut down for refueling. Reactor A has an average lifetime power capacity of 90 percent and has been operating for 10 years. Reactor B has an average lifetime power capacity of 80 percent and has been operating for 15 years.

Which reactor will have the <u>higher</u> reactor vessel nil-ductility transition temperature, and why?

A. Reactor A, because it has the higher average lifetime power capacity.

B. Reactor B, because it has the lower average lifetime power capacity.

C. Reactor A, because it has produced significantly less fissions.

D. Reactor B, because it has produced significantly more fissions.

ANSWER: D.

TOPIC: 293010
KNOWLEDGE: K1.05 [2.5/2.8]
QID: B4250 (P4250)

A reactor is shut down for refueling following 18 months of operation at an average power level of 85 percent. During the shutdown, a reactor vessel metal specimen was removed from the reactor vessel for testing. The tests determined that the nil-ductility transition (NDT) temperature of the specimen increased from 42°F to 72°F since the previous refueling shutdown.

Which one of the following conclusions is warranted?

A. The test results are credible and the reactor vessel is <u>more</u> likely to experience brittle fracture now than after the previous refueling shutdown.

B. The test results are credible and the reactor vessel is <u>less</u> likely to experience brittle fracture now than after the previous refueling shutdown.

C. The test results are questionable because the specimen NDT temperature would <u>not</u> increase during the described 18-month period of operation.

D. The test results are questionable because the specimen NDT temperature would increase by <u>less</u> than indicated during the described 18-month period of operation.

ANSWER: D.

TOPIC: 293010
KNOWLEDGE: K1.05 [2.5/2.8]
QID: B4450 (P4450)

A reactor is shut down for refueling. During the shutdown, a reactor vessel metal specimen was removed from the reactor vessel for testing. The specimen was last tested six years ago and then returned to its original location in the reactor vessel. During the subsequent six years, the reactor has completed several 18 month fuel cycles with an average power level of 85 percent.

The tests determined that the nil-ductility transition (NDT) temperature of the specimen has remained unchanged at 44°F since it was last tested. Which one of the following conclusions is warranted?

A. The test results are credible, however, the reactor vessel is more susceptible to brittle fracture now than six years ago.

B. The test results are credible, however, the reactor vessel is less susceptible to brittle fracture now than six years ago.

C. The test results are questionable because the specimen NDT temperature should have increased since it was last tested.

D. The test results are questionable because the specimen NDT temperature should have decreased since it was last tested.

ANSWER: C.

TOPIC: 293010
KNOWLEDGE: K1.05 [2.5/2.8]
QID: B4650 (P4650)

Two identical reactors are currently shut down for refueling. Reactor A has achieved an average lifetime power capacity of 60 percent while operating for 12 years. Reactor B has achieved an average lifetime power capacity of 60 percent while operating for 15 years.

Which reactor, if any, will have the lower reactor vessel nil-ductility transition temperature?

A. Reactor A, because it has produced less total fissions.

B. Reactor B, because it has produced more total fissions.

C. Both reactors will have approximately the same nil-ductility transition temperature because they have equal average lifetime power capacities.

D. Both reactors will have approximately the same nil-ductility transition temperature because the fission rate in a shutdown reactor is not significant.

ANSWER: A.

TOPIC: 293010
KNOWLEDGE: K1.05 [2.5/2.8]
QID: B5550 (P5550)

Two identical reactors are currently shut down for refueling. Reactor A has an average lifetime power capacity of 90 percent and has been operating for 24 years. Reactor B has an average lifetime power capacity of 72 percent and has been operating for 30 years.

Which reactor, if any, will have the lower reactor vessel nil-ductility transition temperature?

A. Reactor A, because it has produced more total fissions.

B. Reactor B, because it has produced less total fissions.

C. Both reactors will have approximately the same nil-ductility transition temperature because fast neutron irradiation in a shutdown reactor is not significant.

D. Both reactors will have approximately the same nil-ductility transition temperature because each reactor has produced approximately the same number of fissions.

ANSWER: D.

TOPIC: 293010
KNOWLEDGE: K1.05 [2.5/2.8]
QID: B6350 (P6350)

Which one of the following comparisons yields a higher probability of brittle fracture for a reactor vessel?

A. A high fast neutron flux in the reactor rather than a high gamma flux.

B. A high material ductility in the reactor vessel rather than a high strength.

C. A rapid 100°F reactor heatup at a high temperature rather than at a low temperature.

D. A rapid 100°F reactor cooldown at a high temperature rather than at a low temperature.

ANSWER: A.

TOPIC: 293010
KNOWLEDGE: K1.05 [2.5/2.8]
QID: B6950 (P6950)

Two identical reactors are currently shut down for refueling. Reactor A has an average lifetime power capacity of 90 percent and has been operating for 16 years. Reactor B has an average lifetime power capacity of 80 percent and has been operating for 18 years.

Which reactor, if any, will have the lower reactor vessel nil-ductility transition temperature, and why?

A. Reactor A, due to the higher average lifetime power capacity.

B. Reactor B, due to the lower average lifetime power capacity.

C. Both reactors will have approximately the same nil-ductility transition temperature because each reactor has produced approximately the same number of fissions.

D. Both reactors will have approximately the same nil-ductility transition temperature because fast neutron irradiation in a shutdown reactor is not significant.

ANSWER: C.