Nebraska Public Power District

Always there when you need us

NLS2013046
May 1, 2013

U.S. Nuclear Regulatory Commission
Attention: Document Control Desk
Washington, D.C. 20555-0001

Subject: Annual Radioactive Effluent Release Report, Offsite Dose Assessment Manual Submittal and Summary of Changes to the Process Control Program
Cooper Nuclear Station, Docket No. 50-298, DPR-46

Dear Sir or Madam:

The purpose of this letter is to transmit to the Nuclear Regulatory Commission (NRC) the Cooper Nuclear Station (CNS) Annual Radioactive Effluent Release Report for the period January 1, 2012, through December 31, 2012. This report is included as Enclosure 1. This letter also transmits a copy of the current Offsite Dose Assessment Manual (ODAM) as Enclosure 2. In addition, the Process Control Program was unchanged in 2012; therefore no summary of changes is being provided. These documents are being submitted for NRC use per the requirements of Technical Specification 5.6.3 and CNS ODAM Section D 5.3.

This letter contains no regulatory commitments.

Should you have any questions or require additional information, please contact me at (402) 825-2904.

Sincerely,

David W. Van Der Kamp
Licensing Manager

/jf

Enclosure 1 - Annual Radioactive Effluent Release Report January 1, 2012 through December 31, 2012
Enclosure 2 - Offsite Dose Assessment Manual January 1, 2012 through December 31, 2012

COOPER NUCLEAR STATION
P.O. Box 98 / Brownville, NE 68321-0098
***Telephone:** (402) 825-3811 / **Fax:** (402) 825-5211*
www.nppd.com

IE48

cc: Regional Administrator w/ enclosures
USNRC - Region IV

Senior Resident Inspector w/ enclosures
USNRC - CNS

Cooper Project Manager w/ enclosures
USNRC - NRR Project Directorate IV-1

CNS Records w/ enclosures

NPG Distribution w/o enclosures

Enclosure 1

Annual Radioactive Effluent Release Report
January 1, 2012 through December 31, 2012

April 2013

Cooper Nuclear Station

Radioactive Effluent Release Report Docket Number 50-298

January 1, 2012 through December 31, 2012

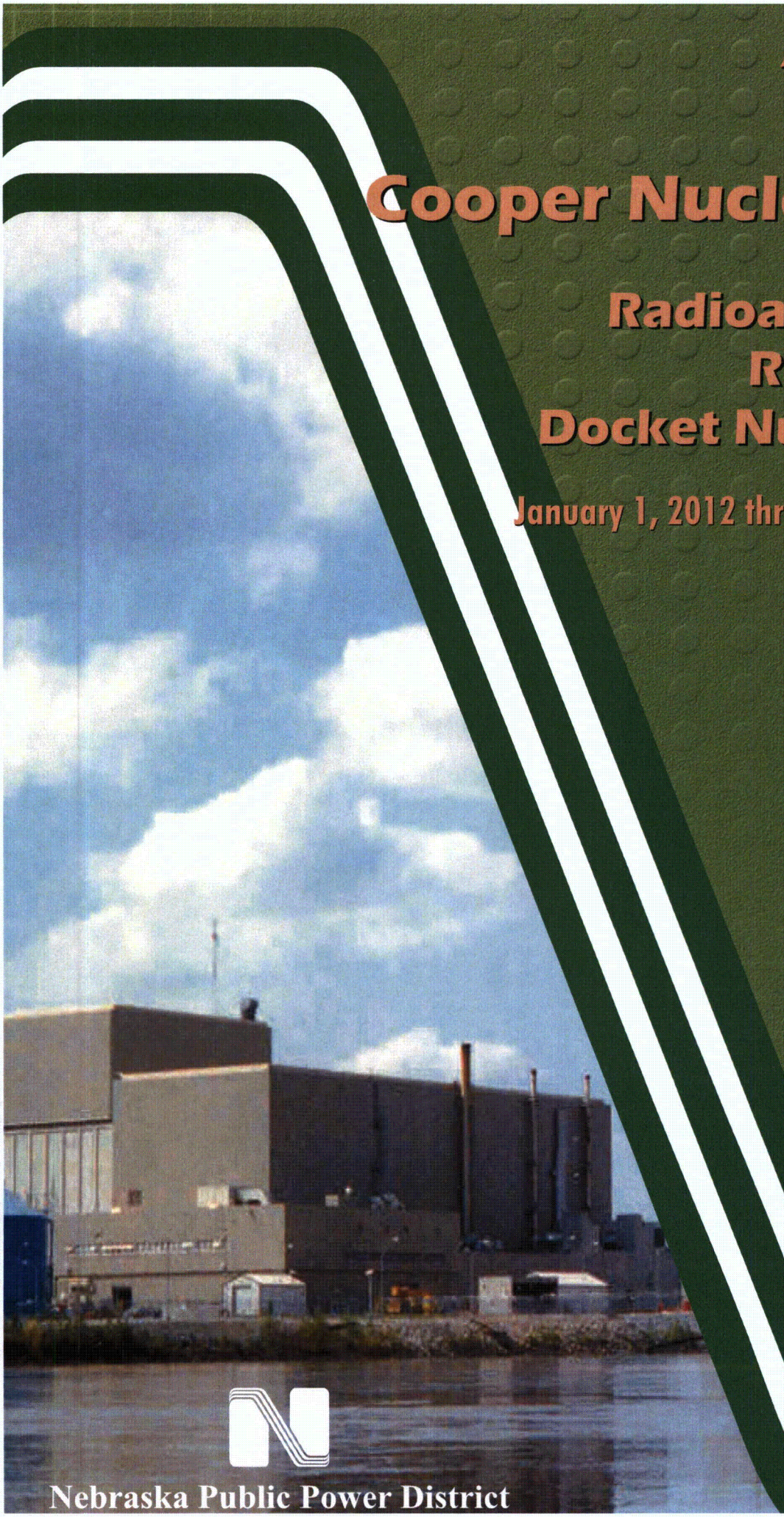

Nebraska Public Power District

NEBRASKA PUBLIC POWER DISTRICT

COOPER NUCLEAR STATION

RADIOACTIVE EFFLUENT RELEASE REPORT

January 1, 2012 through December 31, 2012

USNRC Docket 50-298

CONTENTS

Introduction

Appendix A: Source Terms

Appendix B: Meteorology

Appendix C: Dose Calculations

References

INTRODUCTION

This report summarizes meteorological data and doses from radioactive effluents for the Cooper Nuclear Station for the period January through December, 2012. The data presented is consistent with guidance provided in Regulatory Guide 1.21 of the U.S. Nuclear Regulatory Commission (Revision 1, 1974) for reporting meteorological data and radioactive effluent data.

The report is organized into three parts. Appendix A presents the effluent and waste disposal source term data. Appendix B presents a summary of onsite meteorological data for the report period, including atmospheric diffusion estimates and a description of the atmospheric diffusion model. Appendix C presents the doses from liquid and gaseous radioactive effluents. Descriptions of the dose calculation models are also included.

APPENDIX A

SOURCE TERMS

EFFLUENT AND WASTE DISPOSAL REPORTS

SUPPLEMENTAL INFORMATION

EFFLUENT AND WASTE DISPOSAL ANNUAL REPORT

January 1, 2012 through December 31, 2012

Cooper Nuclear Station effluent and waste disposal data are presented in the format prescribed by Regulatory Guide 1.21. Meteorological data required by Table 4A&B of Regulatory Guide 1.21 is included in the Meteorological Section of the Annual Radioactive Material Release Report - Radioactive Effluents.

Facility Cooper Nuclear Station License DPR-46.

A. Regulatory Limits

1. Gaseous Waste Effluents

a. The dose rates due to radioactive materials released in gaseous effluents offsite shall be limited to the following:

1. Noble Gases: Less than or equal to 500 mrem/yr to the total body and less than or equal to 3000 mrem/yr to the skin.

2. I-131, I-133, tritium, and all radionuclides in particulate form with half-lives greater than or equal to 8 days: Less than or equal to 1500 mrem/yr to any organ.

b. The air dose due to noble gases released in gaseous effluents offsite shall be limited to the following:

1. During any calendar quarter: Less than or equal to 5 mrad from gamma radiation and less than or equal to 10 mrad from beta radiation.

2. During any calendar year: Less than or equal to 10 mrad from gamma radiation and less than or equal to 20 mrad from beta radiation.

c. The dose to a member of the public due to I-131, I-133, and radioactive materials in particulate form with half-lives greater than 8 days in gaseous effluents offsite shall be limited to the following:

1. During any calendar quarter: Less than or equal to 7.5 mrem to any organ.

2. During any calendar year: Less than or equal to 15 mrem to any organ.

2. Liquid Waste Effluents

a. January 1, 2012 through December 31, 2012

The concentration of radioactive material in water offsite due to radioactive liquid effluents shall not exceed the concentration specified in 10 CFR 20 Part 20.1302 for radionuclides other than dissolved or entrained noble gases. For dissolved or entrained noble gases, the concentration shall not exceed 2 x 10-4 uCi/ml total activity. (CNS Technical Specification Amendment 174 Implementation)

b. The dose to a member of the public due to radioactive material in liquid effluents offsite shall be limited to the following:

1. During any calendar quarter: Less than or equal to 1.5 mrem to the total body and less than or equal to 5 mrem to any organ.

2. During any calendar year: Less than or equal to 3 mrem to the total body and less than or equal to 10 mrem to any organ.

B. Maximum Permissible Concentrations

1. Water: Covered in Section A.2.

2. Air: Covered in Section A.1.

C. Average Energy

The average energy (E) of the radionuclide mixtures of fission and activation gases released is not applicable. This information is not utilized for dose or release calculations.

D. Measurements and Approximations of Total Radioactivity

The methods used to measure or approximate the total radioactivity in effluents and to determine radionuclide composition are as follows:

1. Gaseous Effluents

a. Fission and Activation Gases:

Radioactivity and radionuclide composition is determined by laboratory HPGe detector analysis in correlation with continuous gross radioactivity monitoring by a beta scintillation detector in the release pathway.

b. Iodines:

Charcoal cartridges provide continuous sample collection. These cartridges are analyzed for radioactivity and radionuclide composition in the laboratory by a HPGe detector gamma spectrometer.

c. Particulates:

Particulate filters provide continuous sample collection. These filters are analyzed for radioactivity and radionuclide composition in the laboratory by a HPGe detector gamma spectrometer. An aliquot of a filter composite from each release point was analyzed for Sr-89, Sr-90, and gross alpha by an offsite laboratory.

d. Tritium:

A portable sampling apparatus is utilized to collect a quarterly sample of each radioactive vent effluent. These samples are analyzed using a liquid scintillation counter.

e. Carbon-14:

Carbon-14 source term was estimated using 2012 plant operational data and applying the methodology outlined in EPRI Techical Report 1021106 (EPRI, 2010).

2. Liquid Effluents

a. Principal gamma emitters and dissolved and entrained gases:

Each batch of liquid effluent is analyzed for radioactivity and radionuclide composition in the laboratory by a HPGe detector gamma spectrometer. In addition, each batch is monitored for gross gamma radioactivity by a NaI detector in-line with the release pathway.

b. Tritium:

An aliquot of a monthly composite is analyzed using a liquid scintillation counter.

c. Sr-89 and Sr-90:

An aliquot from a quarterly composite is analyzed by an offsite laboratory.

d. Gross alpha:

An aliquot from a monthly composite is analyzed by an offsite laboratory.

e. Fe-55:

An aliquot from a quarterly composite is analyzed by an offsite laboratory.

E. Batch Releases

a. Liquid

1.	Number of batch releases	0	
2.	Total time period for batch releases	NA	minutes
3.	Maximum time period for batch release	NA	minutes
4.	Average time period for batch release	NA	minutes
5.	Minimum time period for batch release	NA	minutes
6.	Average stream flow during periods of release of effluent into a flowing stream	NA	liters/minute

b. Gaseous

1.	Number of batch releases	0	
2.	Total time period for batch releases	NA	minutes
3.	Maximum time period for batch release	NA	minutes
4.	Average time period for batch release	NA	minutes
5.	Minimum time period for batch release	NA	minutes

F. Abnormal Release

a. Liquid

1.	Number of releases:	0	
2.	Total activity released	NA	Ci

b. Gaseous

1.	Number of releases:	0	
2.	Total activity released	NA	Ci

TABLE 1A
EFFLUENT AND WASTE DISPOSAL ANNUAL REPORT
GASEOUS EFFLUENTS-SUMMATION OF ALL RELEASES

		UNIT	1st QTR	2nd QTR	3rd QTR	4th QTR	EST. TOTAL ERROR %
A.	Fission and activation gases						
	1. Total release	Ci	3.52E-01	2.27E-01	4.31E-01	4.04E+01	2.0E+01
	2. Average release rate for period	μCi/sec	4.48E-02	2.89E-02	5.42E-02	5.08E+00	
B.	Iodines						
	1. Total iodine 131	Ci	1.73E-05	1.90E-05	9.15E-05	5.83E-05	3.0E+01
	2. Average release rate for period	μCi/sec	2.19E-06	2.41E-06	1.15E-05	7.33E-06	
C.	Particulates						
	1. Particulates with half-lives >8 days	Ci	7.01E-05	7.38E-05	1.89E-04	9.54E-04	5.0E+01
	2. Average release rate for period	μCi/sec	8.92E-06	9.39E-06	2.38E-05	1.20E-04	
	3. Gross alpha radioactivity	Ci	3.70E-06	1.62E-06	2.19E-06	1.42E-06	
D.	Tritium						
	1. Total release	Ci	6.67E+00	3.95E+00	6.25E+00	9.83E-01	3.0E+01
	2. Average release rate for period	μCi/sec	8.48E-01	5.02E-01	7.86E-01	1.24E-01	
E.	Carbon-14						
	1. Total release	Ci	2.67E+00	2.67E+00	2.70E+00	2.70E+00	NA
	2 Release Rate	μCi/sec	3.40E-01	3.40E-01	3.40E-01	3.40E-01	

TABLE 1B
EFFLUENT AND GASEOUS WASTE DISPOSAL ANNUAL REPORT
GASEOUS EFFLUENT-ELEVATED RELEASE
CONTINUOUS MODE *BATCH

	NUCLIDES RELEASED	UNIT	1st QTR	2nd QTR	3rd QTR	4th QTR
1.	Fission gases					
	argon-41	Ci	3.32E-02	1.32E-02	1.73E-02	1.64E+00
	krypton-83m	Ci	0.00E+00	0.00E+00	0.00E+00	0.00E+00
	krypton-85m	Ci	0.00E+00	0.00E+00	0.00E+00	1.85E+00
	krypton-85	Ci	0.00E+00	0.00E+00	0.00E+00	0.00E+00
	krypton-87	Ci	2.34E-02	0.00E+00	0.00E+00	8.53E+00
	krypton-88	Ci	0.00E+00	0.00E+00	0.00E+00	6.38E+00
	krypton-89	Ci	0.00E+00	0.00E+00	0.00E+00	0.00E+00
	xenon-131m	Ci	0.00E+00	0.00E+00	0.00E+00	0.00E+00
	xenon-133m	Ci	0.00E+00	0.00E+00	0.00E+00	0.00E+00
	xenon-133	Ci	0.00E+00	0.00E+00	0.00E+00	4.37E-01
	xenon-135m	Ci	6.82E-02	5.02E-02	9.04E-02	3.40E+00
	xenon-135	Ci	1.35E-02	1.56E-02	2.08E-02	6.63E+00
	xenon-137	Ci	0.00E+00	0.00E+00	0.00E+00	0.00E+00
	xenon-138	Ci	2.14E-01	1.48E-01	3.02E-01	1.14E+01
	Total for period	Ci	3.52E-01	2.27E-01	4.31E-01	4.03E+01
2.	Iodines					
	iodine-131	Ci	5.65E-06	4.28E-06	6.79E-06	2.88E-05
	iodine-132	Ci	0.00E+00	0.00E+00	0.00E+00	4.62E-06
	iodine-133	Ci	1.47E-05	1.06E-05	1.75E-05	1.02E-04
	iodine-134	Ci	0.00E+00	0.00E+00	0.00E+00	0.00E+00
	iodine-135	Ci	0.00E+00	0.00E+00	0.00E+00	5.12E-05
	Total for period	Ci	2.04E-05	1.49E-05	2.43E-05	1.87E-04

* No batch discharges were made

TABLE 1B
EFFLUENT AND GASEOUS WASTE DISPOSAL ANNUAL REPORT
GASEOUS EFFLUENT-ELEVATED RELEASE (CONTINUED)
CONTINUOUS MODE *BATCH

	NUCLIDES RELEASED	UNIT	1st QTR	2nd QTR	3rd QTR	4th QTR
3.	Particulates					
	sodium-24	Ci	0.00E+00	0.00E+00	0.00E+00	0.00E+00
	chromium-51	Ci	0.00E+00	0.00E+00	0.00E+00	8.96E-06
	manganese-54	Ci	0.00E+00	0.00E+00	0.00E+00	1.31E-06
	manganese-56	Ci	0.00E+00	0.00E+00	0.00E+00	0.00E+00
	cobalt-58	Ci	0.00E+00	0.00E+00	0.00E+00	9.59E-07
	iron-59	Ci	0.00E+00	0.00E+00	0.00E+00	0.00E+00
	cobalt-60	Ci	1.90E-07	2.06E-07	2.16E-07	1.62E-05
	zinc-65	Ci	0.00E+00	0.00E+00	0.00E+00	6.95E-07
	zinc-69	Ci	0.00E+00	0.00E+00	0.00E+00	0.00E+00
	rubidium-88	Ci	0.00E+00	0.00E+00	0.00E+00	0.00E+00
	rubidium-89	Ci	0.00E+00	0.00E+00	0.00E+00	0.00E+00
	strontium-89	Ci	1.36E-07	1.71E-07	3.22E-07	4.29E-06
	strontium-90	Ci	0.00E+00	0.00E+00	0.00E+00	6.37E-08
	strontium-91	Ci	0.00E+00	0.00E+00	0.00E+00	2.89E-05
	yttriuim-91m	Ci	0.00E+00	0.00E+00	0.00E+00	0.00E+00
	strontium-92	Ci	0.00E+00	0.00E+00	0.00E+00	0.00E+00
	niobium-95	Ci	0.00E+00	0.00E+00	0.00E+00	1.32E-08
	ruthenium-103	Ci	0.00E+00	0.00E+00	0.00E+00	0.00E+00
	silver-110m	Ci	0.00E+00	0.00E+00	0.00E+00	0.00E+00
	antimony-124	Ci	0.00E+00	0.00E+00	0.00E+00	1.13E-07
	antimony-125	Ci	0.00E+00	0.00E+00	0.00E+00	0.00E+00
	tellurium-132	Ci	0.00E+00	0.00E+00	0.00E+00	0.00E+00
	cesium-137	Ci	2.59E-08	8.33E-08	5.76E-08	1.82E-07
	cesium-138	Ci	1.04E-04	0.00E+00	3.24E-04	5.20E-02
	barium-139	Ci	3.21E-04	2.95E-04	1.03E-03	2.81E-03
	barium-140	Ci	0.00E+00	4.67E-08	0.00E+00	3.39E-06
	lanthanum-140	Ci	0.00E+00	0.00E+00	9.35E-08	3.15E-06
	cerium-144	Ci	0.00E+00	0.00E+00	0.00E+00	0.00E+00
	praesodymium-144		0.00E+00	0.00E+00	0.00E+00	0.00E+00
	Total for period	Ci	4.25E-04	2.96E-04	1.35E-03	5.49E-02
	Total for period with >8d half life	Ci	3.52E-07	5.07E-07	5.96E-07	3.62E-05

* No batch discharges were made

TABLE 1C
EFFLUENT AND GASEOUS WASTE DISPOSAL ANNUAL REPORT
GASEOUS EFFLUENT-BUILDING VENT RELEASE
CONTINUOUS MODE *BATCH

	NUCLIDES RELEASED	UNIT	1st QTR	2nd QTR	3rd QTR	4th QTR
1.	Fission gases					
	krypton-83m	Ci	0.00E+00	0.00E+00	0.00E+00	0.00E+00
	krypton-85m	Ci	0.00E+00	0.00E+00	0.00E+00	0.00E+00
	krypton-85	Ci	0.00E+00	0.00E+00	0.00E+00	0.00E+00
	krypton-87	Ci	0.00E+00	0.00E+00	0.00E+00	0.00E+00
	krypton-88	Ci	0.00E+00	0.00E+00	0.00E+00	0.00E+00
	krypton-89	Ci	0.00E+00	0.00E+00	0.00E+00	0.00E+00
	xenon-131m	Ci	0.00E+00	0.00E+00	0.00E+00	0.00E+00
	xenon-133m	Ci	0.00E+00	0.00E+00	0.00E+00	0.00E+00
	xenon-133	Ci	0.00E+00	0.00E+00	0.00E+00	0.00E+00
	xenon-135m	Ci	0.00E+00	0.00E+00	0.00E+00	0.00E+00
	xenon-135	Ci	0.00E+00	0.00E+00	0.00E+00	1.14E-01
	xenon-137	Ci	0.00E+00	0.00E+00	0.00E+00	0.00E+00
	xenon-138	Ci	0.00E+00	0.00E+00	0.00E+00	0.00E+00
	Total for period	Ci	0.00E+00	0.00E+00	0.00E+00	1.14E-01
2.	Iodines					
	iodine-131	Ci	1.16E-05	1.47E-05	8.47E-05	2.95E-05
	iodine-132	Ci	0.00E+00	0.00E+00	5.24E-05	0.00E+00
	iodine-133	Ci	1.87E-05	2.75E-05	3.31E-04	1.27E-05
	iodine-134	Ci	0.00E+00	0.00E+00	0.00E+00	0.00E+00
	iodine-135	Ci	0.00E+00	0.00E+00	0.00E+00	5.15E-05
	Total for period	Ci	3.03E-05	4.22E-05	4.68E-04	9.37E-05

* No batch discharges were made.

TABLE 1C
EFFLUENT AND GASEOUS WASTE DISPOSAL ANNUAL REPORT
GASEOUS EFFLUENT-BUILDING VENT RELEASE (CONTINUED)
CONTINUOUS MODE *BATCH

	NUCLIDES RELEASED	UNIT	1st QTR	2nd QTR	3rd QTR	4th QTR
3.	Particulates					
	sodium-24	Ci	0.00E+00	0.00E+00	5.11E-05	1.27E-05
	chromium-51	Ci	0.00E+00	0.00E+00	0.00E+00	3.75E-04
	manganese-54	Ci	4.54E-06	2.00E-06	5.90E-06	4.85E-05
	manganese-56	Ci	0.00E+00	0.00E+00	0.00E+00	0.00E+00
	cobalt-57	Ci	0.00E+00	0.00E+00	0.00E+00	0.00E+00
	cobalt-58	Ci	0.00E+00	0.00E+00	0.00E+00	2.25E-05
	iron-59	Ci	0.00E+00	0.00E+00	0.00E+00	1.70E-05
	cobalt-60	Ci	6.37E-05	6.86E-05	1.77E-04	4.26E-04
	zinc-65	Ci	0.00E+00	0.00E+00	2.24E-06	1.81E-05
	rubidium-89	Ci	0.00E+00	0.00E+00	0.00E+00	0.00E+00
	strontium-89	Ci	0.00E+00	0.00E+00	7.29E-07	1.12E-06
	strontium-90	Ci	0.00E+00	0.00E+00	3.21E-07	0.00E+00
	strontium-91	Ci	0.00E+00	0.00E+00	4.66E-04	1.08E-04
	strontium-92	Ci	0.00E+00	0.00E+00	2.66E-04	1.45E-04
	yttrium-91m	Ci	0.00E+00	0.00E+00	0.00E+00	0.00E+00
	nobium-95	Ci	0.00E+00	0.00E+00	0.00E+00	4.70E-06
	technetium-99m	Ci	0.00E+00	0.00E+00	0.00E+00	2.34E-07
	ruthenium-103	Ci	0.00E+00	0.00E+00	0.00E+00	0.00E+00
	silver-110m	Ci	0.00E+00	0.00E+00	0.00E+00	0.00E+00
	antimony-124	Ci	0.00E+00	0.00E+00	0.00E+00	4.10E-06
	cesium-137	Ci	1.55E-06	2.70E-06	0.00E+00	0.00E+00
	cesium-138	Ci	0.00E+00	0.00E+00	0.00E+00	0.00E+00
	barium-139	Ci	0.00E+00	0.00E+00	4.66E-03	7.14E-04
	barium-140	Ci	0.00E+00	0.00E+00	2.35E-06	0.00E+00
	lanthanum-140	Ci	0.00E+00	0.00E+00	3.98E-06	2.35E-06
	cerium-141	Ci	0.00E+00	0.00E+00	0.00E+00	8.59E-07
	cerium-144	Ci	0.00E+00	0.00E+00	0.00E+00	0.00E+00
	praseodymium-144	Ci	0.00E+00	0.00E+00	0.00E+00	0.00E+00
	Total for period	Ci	6.98E-05	7.33E-05	5.64E-03	1.90E-03
	Total for period >8 day half life	Ci	6.98E-05	7.33E-05	1.89E-04	9.18E-04

* No batch discharges were made

TABLE 2A
EFFLUENT AND WASTE DISPOSAL ANNUAL REPORT
LIQUID EFFLUENTS-SUMMATION OF ALL RELEASES*

		UNIT	1st QTR	2nd QTR	3rd QTR	4th QTR	EST. TOTAL ERROR %
A.	Fission and activation products						
	1. Total release (not including tritium, gases or alpha)	Ci	0.00E+00	0.00E+00	0.00E+00	0.00E+00	2.0E+01
	2. Average diluted concentration during period	μCi/ml	0.00E+00	0.00E+00	0.00E+00	0.00E+00	
B.	Tritium						
	1. Total release	Ci	0.00E+00	0.00E+00	0.00E+00	0.00E+00	2.0E+01
	2. Average diluted concentration during period	μCi/ml	0.00E+00	0.00E+00	0.00E+00	0.00E+00	
C.	Dissolved and entrained gases						
	1. Total release	Ci	0.00E+00	0.00E+00	0.00E+00	0.00E+00	5.0E+01
	2. Average diluted concentration during period	μCi/ml	0.00E+00	0.00E+00	0.00E+00	0.00E+00	
D.	Gross alpha radioactivity						
	1. Total release	Ci	0.00E+00	0.00E+00	0.00E+00	0.00E+00	5.0E+01
E.	Volume of waste released (prior to dilution)	liters	0.00E+00	0.00E+00	0.00E+00	0.00E+00	1.0E+01
F.	Volume of dilution water used during period	liters	0.00E+00	0.00E+00	0.00E+00	0.00E+00	1.0E+01

*No Liquid Effluent Releases

TABLE 2B
EFFLUENT AND WASTE DISPOSAL ANNUAL REPORT
LIQUID EFFLUENTS (CONTINUED)
CONTINUOUS MODE *BATCH MODE

NUCLIDES RELEASED	UNIT	1st QTR	2nd QTR	3rd QTR	4th QTR
sodium-24	Ci	0.00E+00	0.00E+00	0.00E+00	0.00E+00
chromium-51	Ci	0.00E+00	0.00E+00	0.00E+00	0.00E+00
manganese-54	Ci	0.00E+00	0.00E+00	0.00E+00	0.00E+00
iron-55	Ci	0.00E+00	0.00E+00	0.00E+00	0.00E+00
cobalt-58	Ci	0.00E+00	0.00E+00	0.00E+00	0.00E+00
iron-59	Ci	0.00E+00	0.00E+00	0.00E+00	0.00E+00
cobalt-60	Ci	0.00E+00	0.00E+00	0.00E+00	0.00E+00
zinc-65	Ci	0.00E+00	0.00E+00	0.00E+00	0.00E+00
strontium-89	Ci	0.00E+00	0.00E+00	0.00E+00	0.00E+00
strontium-90	Ci	0.00E+00	0.00E+00	0.00E+00	0.00E+00
technetium-99m	Ci	0.00E+00	0.00E+00	0.00E+00	0.00E+00
antimony-124	Ci	0.00E+00	0.00E+00	0.00E+00	0.00E+00
iodine-131	Ci	0.00E+00	0.00E+00	0.00E+00	0.00E+00
iodine-133	Ci	0.00E+00	0.00E+00	0.00E+00	0.00E+00
cesium-134	Ci	0.00E+00	0.00E+00	0.00E+00	0.00E+00
cesium-137	Ci	0.00E+00	0.00E+00	0.00E+00	0.00E+00
cerium-144	Ci	0.00E+00	0.00E+00	0.00E+00	0.00E+00
Total for period	Ci	0.00E+00	0.00E+00	0.00E+00	0.00E+00
xenon-133	Ci	0.00E+00	0.00E+00	0.00E+00	0.00E+00
xenon-135	Ci	0.00E+00	0.00E+00	0.00E+00	0.00E+00

* No continuous mode discharges were made

****NO LIQUID RELEASES**

TABLE 3

SOLID WASTE AND IRRADIATED FUEL SHIPMENTS
PERIOD: January 1, 2012 through December 31, 2012

A. Solid Waste Shipped Offsite for Burial or Disposal (Not Irradiated Fuel)

1. Type of Waste

	Unit	12 Month Period	Est. Total Error %
a. Spent resins, filter sludges, evaporator bottoms, etc.	m^3	4.35E+01	N/A
	Ci	2.29E+02	15%
b. Dry compressible waste, contaminated equip, etc.	m^3	5.61E+02	N/A
	Ci	6.67E+01	25%
c. Irradiated components, control rods, etc.	m^3	N/A	N/A
	Ci	N/A	N/A
d. Other	m^3	N/A	N/A
	Ci	N/A	N/A

2. Estimate of Major Nuclide Composition (By Type of Waste), Percent %
   a. Resin

americium-241	1.34E-04	iron-55	5.03E+01
antimony-125	1.28E-02	manganese-54	2.49E+00
carbon-14	1.19E-01	nickel-63	6.76E-01
cesium-134	3.94E-01	plutonium-238	6.23E-05
cesium-137	1.10E+00	plutonium-239	1.39E-04
cobalt-58	1.12E-01	plutonium-241	4.72E-03
cobalt-60	4.33E+01	strontium-89	1.36E-02
curium-242	8.42E-05	strontium-90	3.94E-03
curium-244	1.70E-04	technetium-99	4.13E-03
iodine-129	2.76E-04	tritium	2.81E-02
		zinc-65	1.41E+00

TABLE 3

SOLID WASTE AND IRRADIATED FUEL SHIPMENTS (continued)
PERIOD: January 1, 2012 through December 31, 2012

b. DAW

americium-241	7.28E-05	nickel-59	8.76E-07
americium-243	2.24E-09	nickel-63	4.47E-01
antimony-124	7.19E-02	niobium-94	2.78E-09
carbon-14	1.31E-01	niobium-95	6.00E-02
cesium-134	1.14E-01	plutonium-238	6.65E-05
cesium-137	3.48E-01	plutonium-239	8.33E-05
chromium-51	2.09E+00	plutonium-240	7.64E-08
cobalt-58	1.87E-01	plutonium-241	2.48E-03
cobalt-60	5.28E+01	silver-110m	2.58E-03
curium-242	1.93E-05	strontium-89	7.67E-03
curium-243	2.09E-09	strontium-90	1.02E-03
curium-244	9.10E-05	technetium-99	1.56E-02
iodine-129	1.14E-03	tritum	6.02E-04
iron-55	3.99E+01	uranium-235	6.23E-08
iron-59	2.34E-01	uranium-238	6.89E-10
manganese-54	2.87E+00	zinc-65	6.42E-01
neptunium-237	3.32E-09	zirconium-95	7.03E-02

TABLE 3

SOLID WASTE AND IRRADIATED FUEL SHIPMENTS (continued)
PERIOD :January 1, 2012 through December 31, 2012

3. Solid Waste Disposition

Number of Shipments	Mode of Transportation	Destination
12	Exclusive Vehicle	UT
15	Exclusive Vehicle	TN

4. Solidification Agent

None

B. Irradiated Fuel Shipments (Disposition)

Number of Shipments	Mode of Transportation	Destination
None	NA	NA

GASEOUS RADIOACTIVE WASTES
CUMULATIVE DOSE DATA

			1st Qtr	2nd Qtr	3rd Qtr	4th Qtr	Annual
A.	Maximum gamma air dose						
	Site boundary*		N	N	N	N	N
	1. Total	mrad	6.11E-06	1.12E-05	2.40E-05	5.86E-04	1.51E-03
	2. Percent of Technical Specification Limit		0.00%	0.00%	0.00%	0.01%	0.02%
	Most Exposed Resident*		NW	NW	NW	NW	NW
	1. Total	mrad	1.19E-05	1.28E-05	2.50E-05	1.16E-03	1.86E-03
	2. Percent of Technical Specification Limit		0.00%	0.00%	0.00%	0.02%	0.02%
B.	Maximum beta air dose						
	Site boundary*		N	N	N	N	N
	1. Total	mrad	3.31E-06	5.47E-06	1.17E-05	5.03E-04	1.06E-03
	2. Percent of Technical Specification Limit		0.00%	0.00%	0.00%	0.01%	0.01%
	Most Exposed Resident*		NW	NW	NW	NW	NW
	1. Total	mrad	6.44E-06	6.25E-06	1.22E-05	7.61E-04	1.19E-03
	2. Percent of Technical Specification Limit		0.00%	0.00%	0.00%	0.01%	0.01%
C.	Maximum organ dose due to I-131, I-133, and particulates (>8 day half lives)						
	Site boundary*		N	N	N	N	N
	1. Total	mrem	1.24E-02	1.89E-02	9.762E-02	5.01E-02	1.72E-01
	2. Percent of Technical Specification Limit		0.17%	0.25%	1.30%	0.67%	1.15%
	3. Organ		Thyroid	Thyroid	Thyroid	Thyroid	Thyroid
	4. Exposed Individual		Infant	Infant	Infant	Infant	Infant
	Most Exposed Resident*		NW	NW	NW	NW	NW
	1. Total	mrem	3.18E-03	5.32E-03	1.95E-02	1.11E-02	4.21E-02
	2. Percent of Technical Specification Limit		0.04%	0.07%	0.26%	0.15%	0.28%
	3. Organ		Thyroid	Thyroid	Thyroid	Thyroid	Thyroid
	4. Exposed Individual		Infant	Infant	Infant	Infant	Infant

D. Maximum organ dose rate due to I-131, I-133, tritium, and particulates (>8 day half-lives) was 0.172 mrem/year which was 1.15% of the Technical Specification Limit.

E. All radioactive noble gas effluent monitors were set to automatically alarm when the monitor alarm set point, determined as specified in the Offsite Dose Assessment Manual (ODAM), was exceeded.
This is required to ensure that the 500 mrem/yr to the total body and the 3000 mrem/yr to the skin limits are not exceeded.
**Resident and Site Boundary Key: N is 0.67 miles North, NNW is 0.69 miles North-Northwest, and NW residence is 0.90 miles Northwest.*

GASEOUS RADIOACTIVE WASTES (Continued)
CUMULATIVE DOSE DATA

F. Maximum organ dose due to Carbon-14*		1st Qtr	2nd Qtr	3rd Qtr	4th Qtr	Annual
1. Total	mrem	2.86E-01	1.96E-01	4.09E-01	3.80E-01	1.22E+00
2. Percent of Technical Specification Limit		2.86%	1.96%	4.09%	3.80%	6.12%
3. Organ	mrem	Bone	Bone	Bone	Bone	Bone
4. Exposed Individual		Child	Child	Child	Child	Child

*Maximum organ dose due to Carbon-14 is based on summation of organ dose pathways from the nearest garden, nearest meat annimal, and nearest milk animal. Inhalation pathway was negligible.

LIQUID RADIOACTIVE WASTES
CUMULATIVE DOSE DATA

A. Maximum whole body dose		1st Qtr	2nd Qtr	3rd Qtr	4th Qtr	Annual
1. Total	mrem	0.00E+00	0.00E+00	0.00E+00	0.00E+00	0.00E+00
2. Percent of Technical Specification Limit		0.00%	0.00%	0.00%	0.00%	0.00%
B. Maximum Organ Dose						
1. Total	mrem	0.00E+00	0.00E+00	0.00E+00	0.00E+00	0.00E+00
2. Percent of Technical Specification Limit		0.00%	0.00%	0.00%	0.00%	0.00%

*No Liquid Effluent Releases

SUPPLEMENTAL INFORMATION

A. Unplanned Releases:

None

B. NPPD Initiated Changes to the Process Control Program:

None.

C. Changes to the Offsite Dose Assessment Manual:

1/26/12: DSR 3.5.1.3 changed to clarify information reported for shipments of radioactive solid waste and irradiated fuel transported from the site during the period for the Radioactive Effluent Release Report.

D. Reports Required by the Offsite Dose Assessment Manual:

1) The following information is being reported per the requirements of ODAM Specification D3.3.2, Condition B, Required Action B.2.2. This condition is being reported below due to the condition continuing for a period of greater than 31 days during the January 1-December 31, 2012 reporting period.

   a) The ERP process flow element was declared inoperable on 8/7/12 due to inaccurate process flow measurements. The erratic signal from the vendor-recommended element is the result of this element being the incorrect hardware for the environment inside the ERP tower. The process flow element remained inoperable through the end of 2012 as the Configuration Change documentation is revised to reflect the correct hardware for the environment into which the flow element is installed. In 2012 the ERP process flow element was inoperable for 146 days.
   b) The MPF VMS was declared inoperable on 11/12/12 due to a failure of the flow recorder. The organization failed to adequately recognize and prioritize the ODAM requirement. The work order was not properly coded to designate ODAM requirement for the equipment, and thus the higher priority for correction of the condition was not recognized. The condition was corrected and the VMS restored to operable on 12/20/12. The MPF VMS was inoperable for a total of 38 days.

2) The following information is being reported per the requirements of ODAM Specification D3.3.2 Condition I, Required Action I.2.2. This information describes conditions in which particulate and iodine sampling via auxiliary sampling equipment as required by ODAM Specification D3.3.2, Condition I, Required Action I.1, was out of service.

   a) With Reactor Building Kaman secured for an MCC outage, the NMC alternate sampler was found to be without power due to a blown fuse. Since the Kaman and the alternate NMC sampler had both lost power, neither was able to monitor the Reactor Building Vent effluent. While alternate sampling was not available, the requirements of ODAM D3.3.2, Condition I.1 were unable to be met. Particulate, iodine, and noble gas effluent sampling from the reactor building vent was unavailable from 11/7/12 12:04 through 11/7/12 16:33 for a total of 269 minutes, which is greater than the 4 hours (240 minutes) allowed by the ODAM.

APPENDIX B

METEOROLOGY

CONTENTS

	Page
METEOROLOGICAL DATA SUMMARIES	B1
MONTHLY SUMMARY TABLES OF HOURLY METEOROLOGICAL DATA	B6
JOINT FREQUENCY DISTRIBUTION TABLES	B130
ATMOSPHERIC DIFFUSION ESTIMATES	B239
ATMOSPHERIC DIFFUSION MODEL	B324

METEOROLOGICAL DATA SUMMARIES

Meteorological data collected onsite for the period January 1, 2012, through December 31, 2012, were reduced, validated, summarized for analysis, and included in appropriate dose calculations. Hourly data summaries are provided for all pertinent parameters and for the joint frequency distributions (JFD's) of wind speed and wind direction by atmospheric stability class.

DATA RECOVERY

Data recovery statistics are provided in Table 1 for all pertinent meteorological parameters. Average data recovery for all parameters in 2012 was approximately 97.7%.

		Lowest Data Recovery	Average Data Recovery
January 1 - March 31, 2012	(Q1)	11.7%	93.7%
April 1 - June 30, 2012	(Q2)	65.0%	97.3%
First Semiannual Period - January 1 - June 30, 2012	(SEM1)	38.4%	95.5%
July 1 - September 30, 2012	(Q3)	100.0%	100.0%
October 1 - December 31, 2012	(Q4)	97.3%	99.8%
Second Semiannual Period - July 1 - December 31, 2012	(SEM2)	98.7%	99.9%
Annual Period - January 1 - December 31, 2012	(ANN)	68.7%	97.7%

WIND AT 100-METER LEVEL AND 10-METER LEVEL

	Predominant Wind Direction at 100m Level		Predominant Wind Direction at 10m Level	
Q1	Northwest	12.7%	South	15.1%
Q2	South	18.1%	South	18.7%
SEM1	South	15.3%	South	16.9%
Q3	South	16.4%	South	19.7%
Q4	South	14.2%	South	16.6%
SEM2	South	15.3%	South	18.1%
ANN	South	15.3%	South	17.5%

	Mean Wind Speed at 100m Level	Mean Wind Speed at 10m Level
Q1	15.9 MPH	9.5 MPH
Q2	15.5 MPH	9.5 MPH
SEM1	15.7 MPH	9.5 MPH
Q3	11.5 MPH	6.3 MPH
Q4	14.9 MPH	8.4 MPH
SEM2	13.2 MPH	7.3 MPH
ANN	14.4 MPH	8.4 MPH

	Maximum Hourly Average Wind Speed/(Date at 100m Level)	Maximum Hourly Average Wind Speed/(Date at 10m Level)
Q1	39.4 MPH/(12/02/29)	31.0 MPH/(12/02/29)
Q2	50.5 MPH/(12/04/15)	28.1 MPH/(12/04/15)
SEM1	50.5 MPH/(12/04/15)	31.0 MPH/(12/02/29)
Q3	41.1 MPH/(12/08/04)	27.1 MPH/(12/08/04)
Q4	48.6 MPH/(12/12/20)	32.2 MPH/(12/11/10)
SEM2	48.6 MPH/(12/12/20)	32.2 MPH/(12/11/10)
ANN	50.5 MPH/(12/04/15)	32.2 MPH/(12/11/10)

TEMPERATURE AT 10-METER LEVEL

	Mean Hourly Average Temperature	Average Daily Maximum	Average Daily Minimum
Q1	42.0 Degrees F	52.0 Degrees F	32.8 Degrees F
Q2	68.6 Degrees F	78.2 Degrees F	58.1 Degrees F
SEM1	55.3 Degrees F	65.1 Degrees F	45.5 Degrees F
Q3	74.6 Degrees F	86.0 Degrees F	63.1 Degrees F
Q4	43.3 Degrees F	53.7 Degrees F	33.7 Degrees F
SEM2	59.0 Degrees F	69.9 Degrees F	48.4 Degrees F
ANN	57.2 Degrees F	67.5 Degrees F	46.9 Degrees F

	Maximum Temperature (Date)	Minimum Temperature (Date)
Q1	87.7 Degrees F (12/03/31)	3.3 Degrees F (12/02/11)
Q2	101.3 Degrees F (12/06/27)	36.8 Degrees F (12/04/11)
SEM1	101.3 Degrees F (12/06/27)	3.3 Degrees F (12/02/11)
Q3	103.5 Degrees F (12/07/25)	35.5 Degrees F (12/09/23)
Q4	85.3 Degrees F (12/10/23)	5.5 Degrees F (12/12/26)
SEM2	103.5 Degrees F (12/07/25)	5.5 Degrees F (12/12/26)
ANN	103.5 Degrees F (12/07/25)	3.3 Degrees F (12/02/11)

PRECIPITATION

	Total Precipitation	Maximum Daily Precipitation Total/(Date)	Maximum Hourly Precipitation Total/(Date)
Q1	3.78 Inches	1.03 Inches (12/02/03)	0.41 Inches (12/02/03)
Q2*	6.18 Inches	0.73 Inches (12/06/14)	0.52 Inches (12/06/20)
SEM1*	9.96 Inches	1.03 Inches (12/02/03)	0.52 Inches (12/06/20)
Q3*	4.94 Inches	2.38 Inches (12/08/25)	0.84 Inches (12/08/25)
Q4	3.08 Inches	0.98 Inches (12/10/14)	0.76 Inches (12/10/14)
SEM2*	8.02 Inches	2.38 Inches (12/08/25)	0.84 Inches (12/08/25)
ANN*	17.98 Inches	2.38 Inches (12/08/25)	0.84 Inches (12/08/25)

*Totals are low due to drought conditions experienced throughout the region in 2012.

ATMOSPHERIC STABILITY

Atmospheric stability is determined through classification of differential temperature data based on JFD of the 100-meter wind and the delta T (100m - 10m) stability data.

	Unstable Conditions Classes A-C	Neutral Conditions Class D	Stable Conditions Classes E-G
Q1	4%	50%	47%
Q2	13%	49%	38%
SEM1	9%	49%	42%
Q3	11%	34%	55%
Q4	2%	48%	50%
SEM2	7%	41%	52%
ANN	8%	45%	47%

TABLE 1. Meteorological Data Recovery

Data Recovery (% of total Observations)

	January-March 2012	April-June 2012	January-June 2012	July-Sept. 2012	October-Dec. 2012	July-Dec. 2012	January-Dec. 2012
100m wind speed	100.0	100.0	100.0	100.0	99.9	99.9	99.9
100m wind direction	100.0	100.0	100.0	100.0	100.0	100.0	100.0
100m ambient temperature	100.0	100.0	100.0	100.0	100.0	100.0	100.0
60m wind speed	100.0	98.4	99.2	100.0	100.0	100.0	99.6
60m wind direction	100.0	98.4	99.2	100.0	100.0	100.0	99.6
60m ambient temperature	100.0	100.0	100.0	100.0	100.0	100.0	100.0
10m wind speed	100.0	100.0	100.0	100.0	99.9	99.9	99.9
10m wind direction	100.0	100.0	100.0	100.0	99.9	99.9	99.9
10m ambient temperature	100.0	100.0	100.0	100.0	100.0	100.0	100.0
10m dew point	11.7	65.0	38.4	100.0	97.3	98.7	68.7
100m-10m delta T	100.0	100.0	100.0	100.0	100.0	100.0	100.0
100m-60m delta T	100.0	100.0	100.0	100.0	99.9	99.9	99.9
60m-10m delta T	100.0	100.0	100.0	100.0	100.0	100.0	100.0
100m JFD	100.0	100.0	100.0	100.0	99.9	99.9	99.9
10m JFD	100.0	100.0	100.0	100.0	99.9	99.9	99.9

JFD - Joint Frequency Distribution of wind speed, wind direction and atmospheric stability.

MONTHLY SUMMARY TABLES OF HOURLY METEOROLOGICAL DATA

The tables presented in this section provide a summary of hourly averages of measured meteorological parameters. The tables provide summaries by month for the annual period January through December, 2012. Summaries for the first quarter, second quarter, third quarter, fourth quarter, and semiannual periods are also provided. The parameters provided are listed below.

* 10 meter ambient temperature.

* Wind direction frequencies at 10 meters and 100 meters.

* Precipitation.

Any missing or non-measured data are indicated by a field of 9's.

10-Meter Ambient Temperature

and

10-Meter Dew Point Temperature

PROGRAM: WETTEMP
VERSION: PC-1.0

NPPD-COOPER NUCLEAR STATION 10-M TEMPERATURE SUMMARY JAN-MAR 2012

MONTHLY HOUR AVERAGES FOR THE PERIOD

JANUARY

10.0 METER LEVEL

HOUR	TEMPERATURE NUMBER OBS	TEMPERATURE (DEG F)	DEW POINT NUMBER OBS	DEW POINT (DEG F)	RELATIVE HUM NUMBER OBS	RELATIVE HUM (%)	ABSOLUTE HUM NUMBER OBS	ABSOLUTE HUM (GM/M3)	WET BULB NUMBER OBS	WET BULB (DEG F)
1	31	30.2	11	-6.2	11	16.3	11	.9	11	24.8
2	31	29.5	11	-6.5	11	16.5	11	.9	11	24.4
3	31	28.9	11	-7.3	11	16.6	11	.9	11	23.6
4	31	28.2	11	-7.4	11	16.9	11	.9	11	23.2
5	31	27.9	11	-7.9	11	17.0	11	.8	11	22.7
6	31	27.6	11	-8.6	11	17.0	11	.8	11	22.0
7	31	27.2	11	-9.4	11	17.2	11	.8	11	21.1
8	31	26.8	11	-9.8	11	17.2	11	.8	11	20.8
9	31	27.3	11	-8.7	11	17.6	11	.8	11	21.4
10	31	29.5	11	-5.7	11	18.1	11	.9	11	23.6
11	31	32.3	11	-3.3	11	17.6	11	1.0	11	26.2
12	31	35.4	11	-.7	11	17.2	11	1.2	11	29.0
13	31	38.0	11	.5	11	16.1	11	1.2	11	31.0
14	31	40.0	11	2.0	11	15.6	11	1.3	11	32.7
15	31	41.4	11	2.2	11	15.0	11	1.3	11	33.5
16	31	42.1	11	2.2	11	14.9	11	1.3	11	33.5
17	31	41.8	10	2.6	10	14.8	10	1.4	10	34.1
18	31	40.0	10	.8	10	14.8	10	1.3	10	32.5
19	31	37.5	10	-1.1	10	15.0	10	1.1	10	30.6
20	31	35.9	10	-2.2	10	15.3	10	1.1	10	29.4
21	31	34.4	10	-3.3	10	15.6	10	1.0	10	28.1
22	31	32.9	10	-4.3	10	15.9	10	1.0	10	26.9
23	31	31.8	10	-5.3	10	16.2	10	1.0	10	25.8
24	31	31.0	10	-5.8	10	16.3	10	.9	10	25.1
HOURLY MEAN		33.2		-3.9		16.3		1.0		26.9
AVG DAILY MAX		43.5		3.5		18.3		1.4		34.2
AVG DAILY MIN		23.4		-11.5		14.4		.7		19.6
ABSOLUTE MAX		69.2		15.7		19.5		2.3		46.4
ABSOLUTE MIN		8.2		-20.0		12.5		.5		12.3
TOTAL OBS		744		256		256		256		256

PROGRAM: WETTEMP
VERSION: PC-1.0

NPPD-COOPER NUCLEAR STATION 10-M TEMPERATURE SUMMARY JAN-MAR 2012

MONTHLY HOUR AVERAGES FOR THE PERIOD

FEBRUARY

10.0 METER LEVEL

	TEMPERATURE		DEW POINT		RELATIVE HUM		ABSOLUTE HUM		WET BULB	
HOUR	NUMBER OBS	(DEG F)	NUMBER OBS	(DEG F)	NUMBER OBS	(%)	NUMBER OBS	(GM/M3)	NUMBER OBS	(DEG F)
1	29	34.2	0	-999.0	0	-999.0	0	-999.0	0	-999.0
2	29	33.2	0	-999.0	0	-999.0	0	-999.0	0	-999.0
3	29	32.0	0	-999.0	0	-999.0	0	-999.0	0	-999.0
4	29	31.3	0	-999.0	0	-999.0	0	-999.0	0	-999.0
5	29	30.8	0	-999.0	0	-999.0	0	-999.0	0	-999.0
6	29	29.9	0	-999.0	0	-999.0	0	-999.0	0	-999.0
7	29	29.2	0	-999.0	0	-999.0	0	-999.0	0	-999.0
8	29	28.8	0	-999.0	0	-999.0	0	-999.0	0	-999.0
9	29	29.5	0	-999.0	0	-999.0	0	-999.0	0	-999.0
10	29	31.4	0	-999.0	0	-999.0	0	-999.0	0	-999.0
11	29	33.9	0	-999.0	0	-999.0	0	-999.0	0	-999.0
12	29	36.1	0	-999.0	0	-999.0	0	-999.0	0	-999.0
13	29	37.9	0	-999.0	0	-999.0	0	-999.0	0	-999.0
14	29	39.2	0	-999.0	0	-999.0	0	-999.0	0	-999.0
15	29	40.5	0	-999.0	0	-999.0	0	-999.0	0	-999.0
16	29	41.3	0	-999.0	0	-999.0	0	-999.0	0	-999.0
17	29	41.4	0	-999.0	0	-999.0	0	-999.0	0	-999.0
18	29	40.4	0	-999.0	0	-999.0	0	-999.0	0	-999.0
19	29	38.7	0	-999.0	0	-999.0	0	-999.0	0	-999.0
20	29	37.2	0	-999.0	0	-999.0	0	-999.0	0	-999.0
21	29	36.3	0	-999.0	0	-999.0	0	-999.0	0	-999.0
22	29	35.7	0	-999.0	0	-999.0	0	-999.0	0	-999.0
23	29	35.1	0	-999.0	0	-999.0	0	-999.0	0	-999.0
24	29	34.4	0	-999.0	0	-999.0	0	-999.0	0	-999.0
HOURLY MEAN		34.9		-999.0		-999.0		-999.0		-999.0
AVG DAILY MAX		43.4		-999.0		-999.0		-999.0		-999.0
AVG DAILY MIN		27.0		999.0		999.0		999.0		999.0
ABSOLUTE MAX		61.7		-999.0		-999.0		-999.0		-999.0
ABSOLUTE MIN		3.3		999.0		999.0		999.0		999.0
TOTAL OBS		696		0		0		0		0

PROGRAM: WETTEMP
VERSION: PC-1.0

NPPD-COOPER NUCLEAR STATION 10-M TEMPERATURE SUMMARY JAN-MAR 2012

MONTHLY HOUR AVERAGES FOR THE PERIOD

MARCH

10.0 METER LEVEL

	TEMPERATURE		DEW POINT		RELATIVE HUM		ABSOLUTE HUM		WET BULB	
HOUR	NUMBER OBS	(DEG F)	NUMBER OBS	(DEG F)	NUMBER OBS	(%)	NUMBER OBS	(GM/M3)	NUMBER OBS	(DEG F)
1	31	52.6	0	-999.0	0	-999.0	0	-999.0	0	-999.0
2	31	51.9	0	-999.0	0	-999.0	0	-999.0	0	-999.0
3	31	51.4	0	-999.0	0	-999.0	0	-999.0	0	-999.0
4	31	50.8	0	-999.0	0	-999.0	0	-999.0	0	-999.0
5	31	50.2	0	-999.0	0	-999.0	0	-999.0	0	-999.0
6	31	49.8	0	-999.0	0	-999.0	0	-999.0	0	-999.0
7	31	49.2	0	-999.0	0	-999.0	0	-999.0	0	-999.0
8	31	49.5	0	-999.0	0	-999.0	0	-999.0	0	-999.0
9	31	51.8	0	-999.0	0	-999.0	0	-999.0	0	-999.0
10	31	55.3	0	-999.0	0	-999.0	0	-999.0	0	-999.0
11	31	58.6	0	-999.0	0	-999.0	0	-999.0	0	-999.0
12	31	61.0	0	-999.0	0	-999.0	0	-999.0	0	-999.0
13	31	62.6	0	-999.0	0	-999.0	0	-999.0	0	-999.0
14	31	64.1	0	-999.0	0	-999.0	0	-999.0	0	-999.0
15	31	65.6	0	-999.0	0	-999.0	0	-999.0	0	-999.0
16	31	66.7	0	-999.0	0	-999.0	0	-999.0	0	-999.0
17	31	67.0	0	-999.0	0	-999.0	0	-999.0	0	-999.0
18	31	66.3	0	-999.0	0	-999.0	0	-999.0	0	-999.0
19	31	64.0	0	-999.0	0	-999.0	0	-999.0	0	-999.0
20	31	61.4	0	-999.0	0	-999.0	0	-999.0	0	-999.0
21	31	59.3	0	-999.0	0	-999.0	0	-999.0	0	-999.0
22	31	57.4	0	-999.0	0	-999.0	0	-999.0	0	-999.0
23	31	56.2	0	-999.0	0	-999.0	0	-999.0	0	-999.0
24	31	55.0	0	-999.0	0	-999.0	0	-999.0	0	-999.0
HOURLY MEAN		57.4		-999.0		-999.0		-999.0		-999.0
AVG DAILY MAX		68.7		-999.0		-999.0		-999.0		-999.0
AVG DAILY MIN		47.5		999.0		999.0		999.0		999.0
ABSOLUTE MAX		87.7		-999.0		-999.0		-999.0		-999.0
ABSOLUTE MIN		24.0		999.0		999.0		999.0		999.0
TOTAL OBS		744		0		0		0		0

PROGRAM: WETTEMP
VERSION: PC-1.0

NPPD-COOPER NUCLEAR STATION 10-M TEMPERATURE SUMMARY JAN-MAR 2012

JAN-MAR HOUR AVERAGES FOR THE PERIOD

10.0 METER LEVEL

	TEMPERATURE		DEW POINT		RELATIVE HUM		ABSOLUTE HUM		WET BULB	
HOUR	NUMBER OBS	(DEG F)	NUMBER OBS	(DEG F)	NUMBER OBS	(%)	NUMBER OBS	(GM/M3)	NUMBER OBS	(DEG F)
1	91	39.1	11	-6.2	11	16.3	11	.9	11	24.8
2	91	38.3	11	-6.5	11	16.5	11	.9	11	24.4
3	91	37.5	11	-7.3	11	16.6	11	.9	11	23.6
4	91	36.9	11	-7.4	11	16.9	11	.9	11	23.2
5	91	36.4	11	-7.9	11	17.0	11	.8	11	22.7
6	91	35.9	11	-8.6	11	17.0	11	.8	11	22.0
7	91	35.3	11	-9.4	11	17.2	11	.8	11	21.1
8	91	35.2	11	-9.8	11	17.2	11	.8	11	20.8
9	91	36.3	11	-8.7	11	17.6	11	.8	11	21.4
10	91	38.9	11	-5.7	11	18.1	11	.9	11	23.6
11	91	41.8	11	-3.3	11	17.6	11	1.0	11	26.2
12	91	44.4	11	-.7	11	17.2	11	1.2	11	29.0
13	91	46.3	11	.5	11	16.1	11	1.2	11	31.0
14	91	47.9	11	2.0	11	15.6	11	1.3	11	32.7
15	91	49.4	11	2.2	11	15.0	11	1.3	11	33.5
16	91	50.2	11	2.2	11	14.9	11	1.3	11	33.5
17	91	50.2	10	2.6	10	14.8	10	1.4	10	34.1
18	91	49.1	10	.8	10	14.8	10	1.3	10	32.5
19	91	46.9	10	-1.1	10	15.0	10	1.1	10	30.6
20	91	45.0	10	-2.2	10	15.3	10	1.1	10	29.4
21	91	43.5	10	-3.3	10	15.6	10	1.0	10	28.1
22	91	42.1	10	-4.3	10	15.9	10	1.0	10	26.9
23	91	41.2	10	-5.3	10	16.2	10	1.0	10	25.8
24	91	40.3	10	-5.8	10	16.3	10	.9	10	25.1
HOURLY MEAN		42.0		-3.9		16.3		1.0		26.9
AVG DAILY MAX		52.0		3.5		18.3		1.4		34.2
AVG DAILY MIN		32.8		-11.5		14.4		.7		19.6
ABSOLUTE MAX		87.7		15.7		19.5		2.3		46.4
ABSOLUTE MIN		3.3		-20.0		12.5		.5		12.3
TOTAL OBS		2184		256		256		256		256

PROGRAM: WETTEMP
VERSION: PC-1.0

NPPD-COOPER NUCLEAR STATION 10-M TEMPERATURE SUMMARY APR-JUN 2012

MONTHLY HOUR AVERAGES FOR THE PERIOD

APRIL

10.0 METER LEVEL

HOUR	TEMPERATURE NUMBER OBS	TEMPERATURE (DEG F)	DEW POINT NUMBER OBS	DEW POINT (DEG F)	RELATIVE HUM NUMBER OBS	RELATIVE HUM (%)	ABSOLUTE HUM NUMBER OBS	ABSOLUTE HUM (GM/M3)	WET BULB NUMBER OBS	WET BULB (DEG F)
1	30	54.8	0	-999.0	0	-999.0	0	-999.0	0	-999.0
2	30	53.5	0	-999.0	0	-999.0	0	-999.0	0	-999.0
3	30	52.5	0	-999.0	0	-999.0	0	-999.0	0	-999.0
4	30	51.7	0	-999.0	0	-999.0	0	-999.0	0	-999.0
5	30	51.2	0	-999.0	0	-999.0	0	-999.0	0	-999.0
6	30	50.6	0	-999.0	0	-999.0	0	-999.0	0	-999.0
7	30	50.5	0	-999.0	0	-999.0	0	-999.0	0	-999.0
8	30	51.9	0	-999.0	0	-999.0	0	-999.0	0	-999.0
9	30	54.2	0	-999.0	0	-999.0	0	-999.0	0	-999.0
10	30	56.7	0	-999.0	0	-999.0	0	-999.0	0	-999.0
11	30	59.3	0	-999.0	0	-999.0	0	-999.0	0	-999.0
12	30	61.8	0	-999.0	0	-999.0	0	-999.0	0	-999.0
13	30	64.1	0	-999.0	0	-999.0	0	-999.0	0	-999.0
14	30	65.6	0	-999.0	0	-999.0	0	-999.0	0	-999.0
15	30	66.9	0	-999.0	0	-999.0	0	-999.0	0	-999.0
16	30	67.4	0	-999.0	0	-999.0	0	-999.0	0	-999.0
17	30	67.4	0	-999.0	0	-999.0	0	-999.0	0	-999.0
18	30	66.8	0	-999.0	0	-999.0	0	-999.0	0	-999.0
19	30	65.3	0	-999.0	0	-999.0	0	-999.0	0	-999.0
20	30	62.9	0	-999.0	0	-999.0	0	-999.0	0	-999.0
21	30	60.6	0	-999.0	0	-999.0	0	-999.0	0	-999.0
22	30	58.8	0	-999.0	0	-999.0	0	-999.0	0	-999.0
23	30	57.3	0	-999.0	0	-999.0	0	-999.0	0	-999.0
24	30	55.8	0	-999.0	0	-999.0	0	-999.0	0	-999.0
HOURLY MEAN		58.6		-999.0		-999.0		-999.0		-999.0
AVG DAILY MAX		68.6		-999.0		-999.0		-999.0		-999.0
AVG DAILY MIN		48.3		999.0		999.0		999.0		999.0
ABSOLUTE MAX		91.8		-999.0		-999.0		-999.0		-999.0
ABSOLUTE MIN		36.8		999.0		999.0		999.0		999.0
TOTAL OBS		720		0		0		0		0

PROGRAM: WETTEMP
VERSION: PC-1.0

NPPD-COOPER NUCLEAR STATION 10-M TEMPERATURE SUMMARY APR-JUN 2012

MONTHLY HOUR AVERAGES FOR THE PERIOD

MAY

10.0 METER LEVEL

HOUR	TEMPERATURE NUMBER OBS	TEMPERATURE (DEG F)	DEW POINT NUMBER OBS	DEW POINT (DEG F)	RELATIVE HUM NUMBER OBS	RELATIVE HUM (%)	ABSOLUTE HUM NUMBER OBS	ABSOLUTE HUM (GM/M3)	WET BULB NUMBER OBS	WET BULB (DEG F)
1	31	65.9	29	48.9	29	55.3	29	9.2	29	56.8
2	31	65.0	29	48.7	29	56.9	29	9.2	29	56.3
3	31	64.0	29	48.2	29	57.7	29	9.0	29	55.6
4	31	62.9	29	48.2	29	60.0	29	9.0	29	55.1
5	31	62.0	29	48.0	29	61.4	29	9.0	29	54.6
6	31	61.3	29	48.1	29	62.9	29	9.0	29	54.3
7	31	61.7	29	48.5	29	63.1	29	9.1	29	54.7
8	31	64.0	29	49.2	29	59.4	29	9.3	29	56.1
9	31	66.9	29	49.2	29	54.3	29	9.3	29	57.3
10	31	69.8	29	49.2	29	49.4	29	9.2	29	58.4
11	31	72.4	29	48.7	29	44.6	29	9.0	29	59.3
12	31	74.6	29	48.4	29	41.3	29	9.0	29	60.0
13	31	76.3	29	48.3	29	39.1	29	8.9	29	60.6
14	31	77.6	29	48.0	29	37.2	29	8.8	29	61.0
15	31	78.5	29	48.0	29	36.4	29	8.8	29	61.3
16	31	78.8	29	48.0	29	36.3	29	8.8	29	61.4
17	31	78.4	29	48.1	29	37.3	29	8.8	29	61.3
18	31	78.0	29	48.1	29	37.6	29	8.8	29	61.1
19	31	76.8	29	48.0	29	39.0	29	8.8	29	60.6
20	31	74.6	29	48.1	29	41.6	29	8.9	29	59.8
21	31	72.2	30	48.3	30	45.1	30	9.0	30	59.0
22	31	70.2	30	48.5	30	48.1	30	9.1	30	58.3
23	31	68.5	30	48.5	30	50.9	30	9.1	30	57.6
24	31	67.1	30	48.6	30	53.4	30	9.1	30	57.0
HOURLY MEAN		70.3		48.4		48.7		9.0		58.2
AVG DAILY MAX		79.9		53.7		66.5		10.8		62.8
AVG DAILY MIN		60.1		43.7		34.0		7.6		53.1
ABSOLUTE MAX		92.3		69.0		85.6		17.2		75.9
ABSOLUTE MIN		46.0		31.2		16.7		4.4		41.9
TOTAL OBS		744		700		700		700		700

PROGRAM: WETTEMP
VERSION: PC-1.0

NPPD-COOPER NUCLEAR STATION 10-M TEMPERATURE SUMMARY APR-JUN 2012

MONTHLY HOUR AVERAGES FOR THE PERIOD

JUNE

10.0 METER LEVEL

HOUR	TEMPERATURE NUMBER OBS	TEMPERATURE (DEG F)	DEW POINT NUMBER OBS	DEW POINT (DEG F)	RELATIVE HUM NUMBER OBS	RELATIVE HUM (%)	ABSOLUTE HUM NUMBER OBS	ABSOLUTE HUM (GM/M3)	WET BULB NUMBER OBS	WET BULB (DEG F)
1	30	71.3	30	57.1	30	62.0	30	12.1	30	62.9
2	30	70.4	30	56.8	30	63.2	30	12.0	30	62.4
3	30	69.7	30	56.6	30	64.3	30	11.9	30	61.9
4	30	68.5	30	56.1	30	65.5	30	11.7	30	61.2
5	30	67.5	30	55.8	30	67.1	30	11.6	30	60.7
6	30	66.9	30	55.8	30	68.3	30	11.6	30	60.4
7	30	68.5	30	56.7	30	66.7	30	11.9	30	61.5
8	30	71.2	30	57.6	30	62.8	30	12.2	30	63.1
9	30	74.6	30	58.2	30	57.3	30	12.4	30	64.7
10	30	77.2	30	58.4	30	53.2	30	12.5	30	65.7
11	30	79.2	30	58.6	30	50.2	30	12.5	30	66.5
12	30	81.0	30	58.5	30	47.2	30	12.5	30	67.1
13	30	82.7	30	58.7	30	45.3	30	12.6	30	67.8
14	30	83.9	30	58.8	30	43.6	30	12.6	30	68.2
15	30	85.1	30	59.0	30	42.5	30	12.7	30	68.7
16	30	85.5	30	59.3	30	42.3	30	12.8	30	69.0
17	30	85.8	30	59.3	30	42.1	30	12.9	30	69.2
18	30	85.3	30	59.3	30	42.8	30	12.9	30	69.0
19	30	84.1	30	59.5	30	44.7	30	13.0	30	68.8
20	30	81.8	30	59.5	30	48.1	30	13.0	30	68.0
21	30	78.5	30	59.1	30	52.6	30	12.9	30	66.6
22	30	76.1	30	58.7	30	55.9	30	12.7	30	65.5
23	30	74.5	30	58.2	30	57.9	30	12.5	30	64.7
24	30	73.3	30	58.1	30	60.0	30	12.4	30	64.1
HOURLY MEAN		76.8		58.1		54.4		12.4		65.3
AVG DAILY MAX		86.1		62.4		72.2		14.4		69.8
AVG DAILY MIN		65.9		53.5		40.7		10.6		59.6
ABSOLUTE MAX		101.3		74.7		85.0		20.8		80.4
ABSOLUTE MIN		44.9		38.1		24.2		5.9		41.8
TOTAL OBS		720		720		720		720		720

PROGRAM: WETTEMP
VERSION: PC-1.0

NPPD-COOPER NUCLEAR STATION 10-M TEMPERATURE SUMMARY APR-JUN 2012

APR-JUN HOUR AVERAGES FOR THE PERIOD

10.0 METER LEVEL

	TEMPERATURE		DEW POINT		RELATIVE HUM		ABSOLUTE HUM		WET BULB	
HOUR	NUMBER OBS	(DEG F)	NUMBER OBS	(DEG F)	NUMBER OBS	(%)	NUMBER OBS	(GM/M3)	NUMBER OBS	(DEG F)
1	91	64.0	59	53.1	59	58.7	59	10.7	59	59.9
2	91	63.0	59	52.8	59	60.1	59	10.6	59	59.4
3	91	62.1	59	52.5	59	61.0	59	10.5	59	58.8
4	91	61.1	59	52.2	59	62.8	59	10.4	59	58.2
5	91	60.2	59	52.0	59	64.3	59	10.3	59	57.7
6	91	59.6	59	52.0	59	65.7	59	10.3	59	57.4
7	91	60.2	59	52.7	59	64.9	59	10.5	59	58.2
8	91	62.4	59	53.5	59	61.1	59	10.8	59	59.7
9	91	65.3	59	53.8	59	55.9	59	10.9	59	61.0
10	91	67.9	59	53.9	59	51.3	59	10.9	59	62.1
11	91	70.3	59	53.7	59	47.5	59	10.8	59	62.9
12	91	72.5	59	53.5	59	44.3	59	10.8	59	63.6
13	91	74.4	59	53.6	59	42.2	59	10.8	59	64.3
14	91	75.8	59	53.5	59	40.5	59	10.8	59	64.7
15	91	76.8	59	53.6	59	39.5	59	10.8	59	65.1
16	91	77.2	59	53.7	59	39.3	59	10.8	59	65.3
17	91	77.2	59	53.8	59	39.7	59	10.9	59	65.3
18	91	76.7	59	53.8	59	40.2	59	10.9	59	65.1
19	91	75.4	59	53.8	59	41.9	59	11.0	59	64.8
20	91	73.1	59	53.9	59	44.9	59	11.0	59	64.0
21	91	70.4	60	53.7	60	48.9	60	11.0	60	62.8
22	91	68.4	60	53.6	60	52.0	60	10.9	60	61.9
23	91	66.8	60	53.4	60	54.4	60	10.8	60	61.1
24	91	65.4	60	53.4	60	56.7	60	10.8	60	60.6
HOURLY MEAN		68.6		53.3		51.6		10.7		61.8
AVG DAILY MAX		78.2		58.1		69.4		12.6		66.3
AVG DAILY MIN		58.1		48.6		37.3		9.1		56.3
ABSOLUTE MAX		101.3		74.7		85.6		20.8		80.4
ABSOLUTE MIN		36.8		31.2		16.7		4.4		41.8
TOTAL OBS		2184		1420		1420		1420		1420

PROGRAM: WETTEMP
VERSION: PC-1.0

NPPD-COOPER NUCLEAR STATION 10-M TEMPERATURE SUMMARY JAN-JUN 2012

JAN-JUN HOUR AVERAGES FOR THE PERIOD

10.0 METER LEVEL

	TEMPERATURE		DEW POINT		RELATIVE HUM		ABSOLUTE HUM		WET BULB	
HOUR	NUMBER OBS	(DEG F)	NUMBER OBS	(DEG F)	NUMBER OBS	(%)	NUMBER OBS	(GM/M3)	NUMBER OBS	(DEG F)
1	182	51.6	70	43.8	70	52.1	70	9.2	70	54.4
2	182	50.6	70	43.5	70	53.2	70	9.1	70	53.9
3	182	49.8	70	43.1	70	54.1	70	9.0	70	53.3
4	182	49.0	70	42.8	70	55.6	70	8.9	70	52.7
5	182	48.3	70	42.6	70	56.9	70	8.8	70	52.2
6	182	47.7	70	42.5	70	58.0	70	8.8	70	51.9
7	182	47.8	70	42.9	70	57.4	70	9.0	70	52.3
8	182	48.8	70	43.5	70	54.2	70	9.2	70	53.6
9	182	50.8	70	44.0	70	49.9	70	9.3	70	54.8
10	182	53.4	70	44.5	70	46.1	70	9.3	70	56.1
11	182	56.0	70	44.8	70	42.8	70	9.3	70	57.2
12	182	58.4	70	45.0	70	40.0	70	9.3	70	58.2
13	182	60.3	70	45.2	70	38.1	70	9.3	70	59.0
14	182	61.8	70	45.4	70	36.6	70	9.3	70	59.6
15	182	63.1	70	45.5	70	35.7	70	9.3	70	60.1
16	182	63.7	70	45.6	70	35.5	70	9.4	70	60.3
17	182	63.7	69	46.4	69	36.1	69	9.5	69	60.8
18	182	62.9	69	46.1	69	36.6	69	9.5	69	60.4
19	182	61.2	69	45.9	69	38.0	69	9.5	69	59.8
20	182	59.1	69	45.8	69	40.6	69	9.6	69	58.9
21	182	57.0	70	45.6	70	44.1	70	9.5	70	57.9
22	182	55.3	70	45.3	70	46.8	70	9.5	70	56.9
23	182	54.0	70	45.0	70	48.9	70	9.4	70	56.1
24	182	52.8	70	44.9	70	50.9	70	9.4	70	55.5
HOURLY MEAN		55.3		44.6		46.2		9.3		56.5
AVG DAILY MAX		65.1		49.6		61.5		10.9		61.3
AVG DAILY MIN		45.5		39.3		33.8		7.8		50.6
ABSOLUTE MAX		101.3		74.7		85.6		20.8		80.4
ABSOLUTE MIN		3.3		-20.0		12.5		.5		12.3
TOTAL OBS		4368		1676		1676		1676		1676

PROGRAM: WETTEMP
VERSION: PC-1.0

NPPD-COOPER NUCLEAR STATION 10-M TEMPERATURE SUMMARY JUL-SEP 2012

MONTHLY HOUR AVERAGES FOR THE PERIOD

JULY

10.0 METER LEVEL

HOUR	TEMPERATURE NUMBER OBS	TEMPERATURE (DEG F)	DEW POINT NUMBER OBS	DEW POINT (DEG F)	RELATIVE HUM NUMBER OBS	RELATIVE HUM (%)	ABSOLUTE HUM NUMBER OBS	ABSOLUTE HUM (GM/M3)	WET BULB NUMBER OBS	WET BULB (DEG F)
1	31	78.1	31	62.2	31	59.2	31	14.0	31	68.1
2	31	77.4	31	61.5	31	59.3	31	13.7	31	67.5
3	31	76.3	31	61.0	31	60.1	31	13.4	31	66.8
4	31	75.3	31	60.5	31	61.2	31	13.2	31	66.1
5	31	74.4	31	60.1	31	62.0	31	13.1	31	65.6
6	31	73.6	31	60.2	31	63.6	31	13.1	31	65.3
7	31	74.1	31	60.9	31	64.2	31	13.4	31	65.9
8	31	76.7	31	62.3	31	61.9	31	14.0	31	67.6
9	31	80.2	31	63.4	31	57.6	31	14.5	31	69.4
10	31	83.4	31	64.2	31	53.2	31	14.8	31	70.8
11	31	85.9	31	64.5	31	49.7	31	14.9	31	71.8
12	31	88.2	31	64.6	31	46.6	31	14.9	31	72.5
13	31	89.7	31	64.8	31	44.8	31	15.0	31	73.1
14	31	91.0	31	64.6	31	42.8	31	14.9	31	73.4
15	31	92.4	31	63.9	31	40.0	31	14.5	31	73.4
16	31	93.2	31	63.3	31	38.3	31	14.2	31	73.3
17	31	93.6	31	63.4	31	37.9	31	14.2	31	73.5
18	31	93.2	31	63.7	31	38.6	31	14.3	31	73.5
19	31	91.8	31	64.5	31	41.4	31	14.8	31	73.6
20	31	88.4	31	65.3	31	46.8	31	15.3	31	73.0
21	31	84.6	31	64.9	31	52.1	31	15.2	31	71.6
22	31	82.4	31	64.1	31	54.7	31	14.8	31	70.5
23	31	80.8	31	63.4	31	56.2	31	14.5	31	69.6
24	31	79.4	31	63.0	31	58.3	31	14.4	31	68.9
HOURLY MEAN		83.5		63.1		52.1		14.3		70.2
AVG DAILY MAX		93.9		67.1		67.7		16.3		74.2
AVG DAILY MIN		73.1		58.7		35.9		12.2		65.1
ABSOLUTE MAX		103.5		75.4		85.7		21.4		79.6
ABSOLUTE MIN		65.1		51.8		23.5		9.4		60.0
TOTAL OBS		744		744		744		744		744

PROGRAM: WETTEMP
VERSION: PC-1.0

NPPD-COOPER NUCLEAR STATION 10-M TEMPERATURE SUMMARY JUL-SEP 2012

MONTHLY HOUR AVERAGES FOR THE PERIOD

AUGUST

10.0 METER LEVEL

HOUR	TEMPERATURE NUMBER OBS	TEMPERATURE (DEG F)	DEW POINT NUMBER OBS	DEW POINT (DEG F)	RELATIVE HUM NUMBER OBS	RELATIVE HUM (%)	ABSOLUTE HUM NUMBER OBS	ABSOLUTE HUM (GM/M3)	WET BULB NUMBER OBS	WET BULB (DEG F)
1	31	69.2	31	54.8	31	61.0	31	11.1	31	60.9
2	31	67.8	31	54.5	31	63.1	31	10.9	31	60.1
3	31	67.0	31	54.3	31	64.6	31	10.9	31	59.7
4	31	66.1	31	54.1	31	66.0	31	10.8	31	59.2
5	31	65.0	31	54.0	31	68.1	31	10.8	31	58.7
6	31	64.2	31	53.7	31	69.3	31	10.7	31	58.3
7	31	64.3	31	54.0	31	69.9	31	10.9	31	58.5
8	31	66.2	31	55.4	31	68.6	31	11.3	31	60.0
9	31	69.4	31	56.4	31	64.3	31	11.7	31	61.8
10	31	73.3	31	57.2	31	58.5	31	11.9	31	63.7
11	31	77.0	31	57.3	31	52.3	31	11.9	31	65.1
12	31	79.8	31	56.7	31	47.3	31	11.7	31	65.8
13	31	81.3	31	56.3	31	44.6	31	11.4	31	66.0
14	31	82.9	31	55.8	31	41.5	31	11.2	31	66.4
15	31	84.3	31	55.7	31	39.6	31	11.2	31	66.8
16	31	85.0	31	55.8	31	38.9	31	11.2	31	67.1
17	31	84.9	31	55.7	31	38.8	31	11.1	31	67.0
18	31	84.3	31	55.8	31	39.5	31	11.2	31	66.8
19	31	82.6	31	56.2	31	42.1	31	11.4	31	66.4
20	31	79.2	31	56.1	31	46.3	31	11.4	31	65.2
21	31	76.0	31	55.8	31	50.7	31	11.3	31	63.9
22	31	73.7	31	55.8	31	54.7	31	11.4	31	63.1
23	31	72.0	31	55.5	31	57.1	31	11.3	31	62.3
24	31	70.3	31	55.2	31	59.7	31	11.2	31	61.5
HOURLY MEAN		74.4		55.5		54.4		11.3		63.1
AVG DAILY MAX		85.9		59.8		72.0		13.0		67.9
AVG DAILY MIN		62.7		51.3		36.2		9.7		56.9
ABSOLUTE MAX		99.2		68.9		86.2		17.4		76.2
ABSOLUTE MIN		47.0		38.9		22.3		6.2		43.3
TOTAL OBS		744		744		744		744		744

PROGRAM: WETTEMP
VERSION: PC-1.0

NPPD-COOPER NUCLEAR STATION 10-M TEMPERATURE SUMMARY JUL-SEP 2012

MONTHLY HOUR AVERAGES FOR THE PERIOD

SEPTEMBER

10.0 METER LEVEL

	TEMPERATURE		DEW POINT		RELATIVE HUM		ABSOLUTE HUM		WET BULB	
HOUR	NUMBER OBS	(DEG F)	NUMBER OBS	(DEG F)	NUMBER OBS	(%)	NUMBER OBS	(GM/M3)	NUMBER OBS	(DEG F)
1	30	60.7	30	46.6	30	60.4	30	8.6	30	53.4
2	30	59.4	30	45.9	30	61.7	30	8.4	30	52.5
3	30	58.3	30	45.4	30	62.9	30	8.2	30	51.7
4	30	57.4	30	44.8	30	63.6	30	8.0	30	51.0
5	30	56.3	30	44.5	30	65.1	30	8.0	30	50.4
6	30	55.4	30	44.1	30	66.3	30	7.9	30	49.8
7	30	54.7	30	44.0	30	67.6	30	7.9	30	49.4
8	30	56.2	30	45.3	30	67.1	30	8.2	30	50.7
9	30	60.2	30	47.2	30	62.8	30	8.7	30	53.4
10	30	64.8	30	48.6	30	56.6	30	9.2	30	56.1
11	30	68.8	30	48.8	30	49.9	30	9.2	30	57.9
12	30	71.4	30	47.8	30	44.8	30	8.9	30	58.6
13	30	73.4	30	47.3	30	41.5	30	8.7	30	59.2
14	30	74.9	30	47.2	30	39.5	30	8.7	30	59.7
15	30	76.3	30	47.2	30	37.9	30	8.7	30	60.2
16	30	77.2	30	47.2	30	36.8	30	8.6	30	60.6
17	30	77.3	30	47.2	30	36.5	30	8.6	30	60.6
18	30	76.2	30	46.9	30	37.1	30	8.6	30	60.1
19	30	73.2	30	46.8	30	40.4	30	8.5	30	58.8
20	30	69.5	30	46.6	30	45.1	30	8.5	30	57.2
21	30	67.1	30	46.8	30	49.1	30	8.5	30	56.2
22	30	65.1	30	46.5	30	52.0	30	8.5	30	55.2
23	30	63.1	30	46.6	30	55.8	30	8.5	30	54.4
24	30	61.5	30	46.2	30	58.0	30	8.4	30	53.5
HOURLY MEAN		65.8		46.5		52.4		8.5		55.4
AVG DAILY MAX		78.0		51.9		70.1		10.2		61.5
AVG DAILY MIN		53.2		40.9		34.2		6.9		47.9
ABSOLUTE MAX		95.8		70.5		83.2		18.0		77.2
ABSOLUTE MIN		35.5		25.6		19.9		3.5		32.1
TOTAL OBS		720		720		720		720		720

PROGRAM: WETTEMP
VERSION: PC-1.0

NPPD-COOPER NUCLEAR STATION 10-M TEMPERATURE SUMMARY JUL-SEP 2012

JUL-SEP HOUR AVERAGES FOR THE PERIOD

10.0 METER LEVEL

	TEMPERATURE		DEW POINT		RELATIVE HUM		ABSOLUTE HUM		WET BULB	
HOUR	NUMBER OBS	(DEG F)	NUMBER OBS	(DEG F)	NUMBER OBS	(%)	NUMBER OBS	(GM/M3)	NUMBER OBS	(DEG F)
1	92	69.4	92	54.6	92	60.2	92	11.2	92	60.9
2	92	68.3	92	54.1	92	61.4	92	11.0	92	60.1
3	92	67.3	92	53.7	92	62.5	92	10.9	92	59.5
4	92	66.3	92	53.2	92	63.6	92	10.7	92	58.9
5	92	65.3	92	53.0	92	65.1	92	10.6	92	58.3
6	92	64.5	92	52.8	92	66.4	92	10.6	92	57.9
7	92	64.4	92	53.1	92	67.2	92	10.7	92	58.0
8	92	66.5	92	54.4	92	65.9	92	11.2	92	59.5
9	92	70.0	92	55.8	92	61.5	92	11.7	92	61.6
10	92	73.9	92	56.7	92	56.1	92	12.0	92	63.6
11	92	77.3	92	57.0	92	50.7	92	12.0	92	65.0
12	92	79.9	92	56.5	92	46.2	92	11.9	92	65.7
13	92	81.5	92	56.2	92	43.6	92	11.8	92	66.2
14	92	83.0	92	56.0	92	41.3	92	11.6	92	66.6
15	92	84.4	92	55.7	92	39.2	92	11.5	92	66.9
16	92	85.2	92	55.5	92	38.0	92	11.4	92	67.0
17	92	85.3	92	55.5	92	37.8	92	11.4	92	67.1
18	92	84.7	92	55.6	92	38.4	92	11.4	92	66.9
19	92	82.6	92	55.9	92	41.3	92	11.6	92	66.3
20	92	79.1	92	56.1	92	46.1	92	11.8	92	65.2
21	92	76.0	92	55.9	92	50.7	92	11.7	92	64.0
22	92	73.8	92	55.6	92	53.8	92	11.6	92	63.0
23	92	72.1	92	55.3	92	56.4	92	11.5	92	62.2
24	92	70.5	92	54.9	92	58.7	92	11.4	92	61.4
HOURLY MEAN		74.6		55.1		53.0		11.4		63.0
AVG DAILY MAX		86.0		59.7		69.9		13.2		67.9
AVG DAILY MIN		63.1		50.4		35.5		9.6		56.7
ABSOLUTE MAX		103.5		75.4		86.2		21.4		79.6
ABSOLUTE MIN		35.5		25.6		19.9		3.5		32.1
TOTAL OBS		2208		2208		2208		2208		2208

PROGRAM: WETTEMP
VERSION: PC-1.0

NPPD-COOPER NUCLEAR STATION 10-M TEMPERATURE SUMMARY OCT-DEC 2012

MONTHLY HOUR AVERAGES FOR THE PERIOD

OCTOBER

10.0 METER LEVEL

HOUR	TEMPERATURE NUMBER OBS	TEMPERATURE (DEG F)	DEW POINT NUMBER OBS	DEW POINT (DEG F)	RELATIVE HUM NUMBER OBS	RELATIVE HUM (%)	ABSOLUTE HUM NUMBER OBS	ABSOLUTE HUM (GM/M3)	WET BULB NUMBER OBS	WET BULB (DEG F)
1	31	49.0	31	35.0	31	59.6	31	5.7	31	42.8
2	31	48.3	31	34.7	31	60.6	31	5.6	31	42.4
3	31	47.2	31	34.4	31	62.5	31	5.6	31	41.7
4	31	46.6	31	34.3	31	63.5	31	5.6	31	41.3
5	31	46.1	31	34.1	31	64.0	31	5.6	31	41.0
6	31	45.6	31	33.9	31	64.6	31	5.6	31	40.7
7	31	45.4	31	33.8	31	64.9	31	5.6	31	40.5
8	31	45.6	31	33.9	31	64.8	31	5.6	31	40.6
9	31	48.0	31	35.5	31	62.9	31	5.9	31	42.5
10	31	51.2	31	36.4	31	57.7	31	6.1	31	44.5
11	31	54.7	31	37.0	31	52.2	31	6.2	31	46.5
12	31	57.3	31	37.0	31	47.6	31	6.2	31	47.7
13	31	59.3	31	36.9	31	44.2	31	6.1	31	48.6
14	31	60.9	31	36.8	31	41.9	31	6.1	31	49.3
15	31	61.9	31	37.0	31	40.6	31	6.1	31	49.8
16	31	62.2	31	36.8	31	40.2	31	6.1	31	49.9
17	31	61.6	31	36.4	31	40.8	31	5.9	31	49.5
18	31	59.9	31	35.9	31	42.4	31	5.8	31	48.5
19	31	56.9	31	35.7	31	46.5	31	5.9	31	47.1
20	31	54.7	31	35.7	31	50.3	31	5.9	31	46.1
21	31	53.1	31	35.3	31	52.2	31	5.8	31	45.1
22	31	51.9	31	35.3	31	54.8	31	5.8	31	44.5
23	31	50.6	31	35.2	31	56.8	31	5.7	31	43.7
24	31	49.4	31	35.0	31	58.9	31	5.7	31	43.1
HOURLY MEAN		52.8		35.5		53.9		5.8		44.9
AVG DAILY MAX		63.6		41.7		70.6		7.3		51.6
AVG DAILY MIN		42.5		29.6		37.1		4.6		37.7
ABSOLUTE MAX		85.3		63.0		100.0		14.3		68.4
ABSOLUTE MIN		25.8		16.9		20.7		2.6		23.1
TOTAL OBS		744		744		744		744		744

PROGRAM: WETTEMP
VERSION: PC-1.0

NPPD-COOPER NUCLEAR STATION 10-M TEMPERATURE SUMMARY OCT-DEC 2012

MONTHLY HOUR AVERAGES FOR THE PERIOD

NOVEMBER

10.0 METER LEVEL

HOUR	TEMPERATURE NUMBER OBS	TEMPERATURE (DEG F)	DEW POINT NUMBER OBS	DEW POINT (DEG F)	RELATIVE HUM NUMBER OBS	RELATIVE HUM (%)	ABSOLUTE HUM NUMBER OBS	ABSOLUTE HUM (GM/M3)	WET BULB NUMBER OBS	WET BULB (DEG F)
1	30	40.9	30	36.1	30	83.6	30	6.1	30	38.9
2	30	40.4	30	36.1	30	85.0	30	6.0	30	38.6
3	30	39.4	30	35.3	30	85.7	30	5.8	30	37.7
4	30	38.8	30	35.1	30	86.8	30	5.8	30	37.3
5	30	38.1	30	34.9	30	88.0	30	5.8	30	36.8
6	30	37.7	30	34.8	30	88.9	30	5.8	30	36.5
7	30	37.1	30	34.9	30	90.6	30	5.8	30	36.2
8	30	36.6	30	34.7	30	91.5	30	5.7	30	35.8
9	30	38.6	30	35.0	30	86.7	30	5.8	30	37.1
10	30	42.3	30	35.3	30	76.8	30	5.8	30	39.3
11	30	45.8	30	35.1	30	67.2	30	5.7	30	41.1
12	30	49.0	30	34.6	30	59.0	30	5.6	30	42.6
13	30	51.3	30	33.9	30	53.0	30	5.4	30	43.5
14	30	53.3	30	33.6	30	49.0	30	5.3	30	44.4
15	30	54.4	30	33.7	30	47.2	30	5.3	30	45.0
16	30	54.7	30	34.0	30	47.0	30	5.4	30	45.3
17	30	53.6	30	34.6	30	49.6	30	5.6	30	45.0
18	30	50.7	30	35.4	30	56.5	30	5.7	30	43.8
19	30	48.2	30	35.8	30	63.1	30	5.9	30	42.7
20	30	46.2	30	36.4	30	69.9	30	6.1	30	42.0
21	30	44.8	30	36.7	30	74.4	30	6.1	30	41.3
22	30	43.7	30	36.6	30	77.1	30	6.1	30	40.6
23	30	42.9	30	36.5	30	79.2	30	6.1	30	40.2
24	30	41.8	30	36.4	30	81.9	30	6.1	30	39.5
HOURLY MEAN		44.6		35.2		72.4		5.8		40.5
AVG DAILY MAX		56.3		42.0		96.0		7.5		47.3
AVG DAILY MIN		34.1		30.1		45.3		4.7		33.5
ABSOLUTE MAX		75.3		65.6		100.0		16.0		65.5
ABSOLUTE MIN		11.3		9.4		30.5		1.8		11.4
TOTAL OBS		720		720		720		720		720

PROGRAM: WETTEMP
VERSION: PC-1.0

NPPD-COOPER NUCLEAR STATION 10-M TEMPERATURE SUMMARY OCT-DEC 2012

MONTHLY HOUR AVERAGES FOR THE PERIOD

DECEMBER

10.0 METER LEVEL

HOUR	TEMPERATURE NUMBER OBS	TEMPERATURE (DEG F)	DEW POINT NUMBER OBS	DEW POINT (DEG F)	RELATIVE HUM NUMBER OBS	RELATIVE HUM (%)	ABSOLUTE HUM NUMBER OBS	ABSOLUTE HUM (GM/M3)	WET BULB NUMBER OBS	WET BULB (DEG F)
1	31	30.4	28	25.7	28	87.5	28	4.0	28	27.8
2	31	29.9	28	25.3	28	87.8	28	3.9	28	27.3
3	31	29.4	29	25.9	29	89.2	29	4.1	29	27.6
4	31	29.1	29	25.6	29	89.5	29	4.1	29	27.2
5	31	28.6	29	25.4	29	90.7	29	4.1	29	26.7
6	31	28.5	28	24.4	28	91.3	28	3.9	28	25.6
7	31	28.0	27	23.5	27	91.3	27	3.8	27	24.7
8	31	27.4	27	23.3	27	92.6	27	3.7	27	24.2
9	31	27.7	27	23.2	27	91.4	27	3.7	27	24.4
10	31	29.9	28	24.2	28	86.9	28	3.9	28	26.4
11	31	32.6	28	24.6	28	80.3	28	3.9	28	28.3
12	31	34.8	29	26.0	29	75.7	29	4.2	29	30.9
13	31	36.9	29	25.6	29	70.4	29	4.1	29	31.9
14	31	38.5	29	26.0	29	68.2	29	4.1	29	32.9
15	31	39.7	29	26.2	29	66.6	29	4.1	29	33.7
16	31	40.0	29	25.9	29	65.2	29	4.0	29	33.6
17	31	39.1	29	26.3	29	68.2	29	4.1	29	33.2
18	31	36.8	29	26.6	29	74.1	29	4.1	29	32.0
19	31	35.2	29	26.8	29	77.5	29	4.2	29	31.3
20	31	34.3	29	26.7	29	79.8	29	4.2	29	30.6
21	31	32.9	29	26.7	29	82.8	29	4.2	29	29.8
22	31	32.0	29	26.3	29	83.8	29	4.1	29	29.1
23	31	31.2	29	25.9	29	84.7	29	4.0	29	28.5
24	31	30.3	29	25.8	29	86.7	29	4.0	29	28.0
HOURLY MEAN		32.6		25.5		81.6		4.0		29.1
AVG DAILY MAX		41.4		32.4		95.1		5.3		36.1
AVG DAILY MIN		24.5		20.9		63.8		3.3		23.4
ABSOLUTE MAX		64.3		54.0		100.0		10.6		58.0
ABSOLUTE MIN		5.5		2.6		23.5		1.4		5.7
TOTAL OBS		744		685		685		685		685

PROGRAM: WETTEMP
VERSION: PC-1.0

NPPD-COOPER NUCLEAR STATION 10-M TEMPERATURE SUMMARY OCT-DEC 2012

OCT-DEC HOUR AVERAGES FOR THE PERIOD

10.0 METER LEVEL

	TEMPERATURE		DEW POINT		RELATIVE HUM		ABSOLUTE HUM		WET BULB	
HOUR	NUMBER OBS	(DEG F)	NUMBER OBS	(DEG F)	NUMBER OBS	(%)	NUMBER OBS	(GM/M3)	NUMBER OBS	(DEG F)
1	92	40.1	89	32.5	89	76.5	89	5.3	89	36.8
2	92	39.5	89	32.2	89	77.4	89	5.2	89	36.4
3	92	38.6	90	32.0	90	78.8	90	5.2	90	35.8
4	92	38.1	90	31.8	90	79.7	90	5.2	90	35.4
5	92	37.6	90	31.5	90	80.6	90	5.2	90	35.0
6	92	37.3	89	31.2	89	81.2	89	5.1	89	34.5
7	92	36.8	88	31.0	88	81.8	88	5.1	88	34.2
8	92	36.5	88	30.9	88	82.4	88	5.1	88	34.0
9	92	38.1	88	31.5	88	79.8	88	5.2	88	35.1
10	92	41.2	89	32.2	89	73.4	89	5.3	89	37.1
11	92	44.3	89	32.5	89	66.1	89	5.3	89	39.0
12	92	47.0	90	32.6	90	60.4	90	5.3	90	40.6
13	92	49.1	90	32.2	90	55.6	90	5.2	90	41.5
14	92	50.9	90	32.3	90	52.7	90	5.2	90	42.4
15	92	52.0	90	32.4	90	51.2	90	5.2	90	43.0
16	92	52.3	90	32.4	90	50.5	90	5.2	90	43.1
17	92	51.4	90	32.5	90	52.6	90	5.2	90	42.7
18	92	49.1	90	32.7	90	57.3	90	5.3	90	41.7
19	92	46.8	90	32.8	90	62.0	90	5.3	90	40.6
20	92	45.1	90	33.1	90	66.3	90	5.4	90	39.7
21	92	43.6	90	33.0	90	69.5	90	5.4	90	38.9
22	92	42.5	90	32.8	90	71.6	90	5.3	90	38.2
23	92	41.6	90	32.6	90	73.3	90	5.3	90	37.7
24	92	40.5	90	32.5	90	75.5	90	5.3	90	37.1
HOURLY MEAN		43.3		32.2		69.0		5.2		38.4
AVG DAILY MAX		53.7		38.7		87.0		6.7		45.1
AVG DAILY MIN		33.7		26.9		48.6		4.2		31.6
ABSOLUTE MAX		85.3		65.6		100.0		16.0		68.4
ABSOLUTE MIN		5.5		2.6		20.7		1.4		5.7
TOTAL OBS		2208		2149		2149		2149		2149

PROGRAM: WETTEMP
VERSION: PC-1.0

NPPD-COOPER NUCLEAR STATION 10-M TEMPERATURE SUMMARY JUL-DEC 2012

JUL-DEC HOUR AVERAGES FOR THE PERIOD

10.0 METER LEVEL

	TEMPERATURE		DEW POINT		RELATIVE HUM		ABSOLUTE HUM		WET BULB	
HOUR	NUMBER OBS	(DEG F)	NUMBER OBS	(DEG F)	NUMBER OBS	(%)	NUMBER OBS	(GM/M3)	NUMBER OBS	(DEG F)
1	184	54.8	181	43.7	181	68.2	181	8.3	181	49.0
2	184	53.9	181	43.3	181	69.2	181	8.2	181	48.4
3	184	53.0	182	42.9	182	70.6	182	8.1	182	47.8
4	184	52.2	182	42.6	182	71.5	182	8.0	182	47.3
5	184	51.5	182	42.4	182	72.8	182	7.9	182	46.8
6	184	50.9	181	42.2	181	73.7	181	7.9	181	46.4
7	184	50.6	180	42.3	180	74.3	180	8.0	180	46.4
8	184	51.5	180	42.9	180	74.0	180	8.2	180	47.0
9	184	54.1	180	43.9	180	70.4	180	8.5	180	48.7
10	184	57.5	181	44.7	181	64.6	181	8.7	181	50.6
11	184	60.8	181	44.9	181	58.3	181	8.7	181	52.2
12	184	63.4	182	44.7	182	53.3	182	8.6	182	53.3
13	184	65.3	182	44.4	182	49.5	182	8.5	182	54.0
14	184	67.0	182	44.2	182	46.9	182	8.4	182	54.6
15	184	68.2	182	44.2	182	45.1	182	8.4	182	55.1
16	184	68.7	182	44.1	182	44.2	182	8.3	182	55.2
17	184	68.4	182	44.2	182	45.1	182	8.3	182	55.0
18	184	66.9	182	44.3	182	47.8	182	8.4	182	54.4
19	184	64.7	182	44.5	182	51.5	182	8.5	182	53.6
20	184	62.1	182	44.7	182	56.1	182	8.6	182	52.6
21	184	59.8	182	44.6	182	60.0	182	8.6	182	51.6
22	184	58.2	182	44.3	182	62.6	182	8.5	182	50.8
23	184	56.8	182	44.1	182	64.7	182	8.4	182	50.1
24	184	55.5	182	43.8	182	67.0	182	8.4	182	49.4
HOURLY MEAN		59.0		43.8		60.9		8.3		50.8
AVG DAILY MAX		69.9		49.3		78.4		10.0		56.6
AVG DAILY MIN		48.4		38.7		42.0		6.9		44.2
ABSOLUTE MAX		103.5		75.4		100.0		21.4		79.6
ABSOLUTE MIN		5.5		2.6		19.9		1.4		5.7
TOTAL OBS		4416		4357		4357		4357		4357

PROGRAM: WETTEMP
VERSION: PC-1.0

NPPD-COOPER NUCLEAR STATION 10-M TEMPERATURE SUMMARY JAN-DEC 2012

JAN-DEC HOUR AVERAGES FOR THE PERIOD

10.0 METER LEVEL

	TEMPERATURE		DEW POINT		RELATIVE HUM		ABSOLUTE HUM		WET BULB	
HOUR	NUMBER OBS	(DEG F)	NUMBER OBS	(DEG F)	NUMBER OBS	(%)	NUMBER OBS	(GM/M3)	NUMBER OBS	(DEG F)
1	366	53.2	251	43.7	251	63.7	251	8.5	251	50.5
2	366	52.3	251	43.4	251	64.8	251	8.4	251	49.9
3	366	51.4	252	43.0	252	66.0	252	8.3	252	49.3
4	366	50.6	252	42.7	252	67.1	252	8.2	252	48.8
5	366	49.9	252	42.4	252	68.3	252	8.2	252	48.3
6	366	49.3	251	42.3	251	69.3	251	8.2	251	47.9
7	366	49.2	250	42.5	250	69.6	250	8.3	250	48.0
8	366	50.2	250	43.1	250	68.4	250	8.5	250	48.9
9	366	52.4	250	43.9	250	64.7	250	8.7	250	50.4
10	366	55.5	251	44.6	251	59.4	251	8.9	251	52.1
11	366	58.5	251	44.9	251	53.9	251	8.9	251	53.6
12	366	60.9	252	44.8	252	49.6	252	8.8	252	54.6
13	366	62.9	252	44.6	252	46.4	252	8.7	252	55.4
14	366	64.4	252	44.6	252	44.1	252	8.7	252	56.0
15	366	65.7	252	44.6	252	42.5	252	8.6	252	56.5
16	366	66.3	252	44.5	252	41.8	252	8.6	252	56.6
17	366	66.1	251	44.8	251	42.6	251	8.6	251	56.6
18	366	64.9	251	44.8	251	44.7	251	8.7	251	56.1
19	366	62.9	251	44.9	251	47.8	251	8.8	251	55.3
20	366	60.6	251	45.0	251	51.8	251	8.9	251	54.4
21	366	58.4	252	44.8	252	55.6	252	8.8	252	53.3
22	366	56.7	252	44.6	252	58.2	252	8.8	252	52.5
23	366	55.4	252	44.3	252	60.3	252	8.7	252	51.7
24	366	54.2	252	44.1	252	62.5	252	8.6	252	51.1
HOURLY MEAN		57.2		44.0		56.8		8.6		52.4
AVG DAILY MAX		67.5		49.4		73.7		10.2		57.9
AVG DAILY MIN		46.9		38.9		39.7		7.2		46.0
ABSOLUTE MAX		103.5		75.4		100.0		21.4		80.4
ABSOLUTE MIN		3.3		-20.0		12.5		.5		5.7
TOTAL OBS		8784		6033		6033		6033		6033

Wind Direction Frequencies

10-Meter Level

NPPD-COOPER NUCLEAR STATION 10-M WIND DIRECTION 2012

PROGRAM: WINPER
VERSION: PC-1.0

HOURLY WIND ROSES (PERCENT)

JANUARY

WIND DIRECTION

HR. OF DAY	N	NNE	NE	ENE	E	ESE	SE	SSE	S	SSW	SW	WSW	W	WNW	NW	NNW	CALM	TOTAL
1	6.5	00.0	00.0	00.0	3.2	00.0	9.7	12.9	19.4	6.5	9.7	6.5	00.0	9.7	9.7	6.5	00.0	100.
2	6.5	00.0	00.0	00.0	6.5	3.2	3.2	19.4	12.9	3.2	9.7	6.5	00.0	9.7	12.9	3.2	3.2	100.
3	9.7	00.0	00.0	3.2	00.0	00.0	6.5	16.1	19.4	9.7	3.2	6.5	3.2	6.5	9.7	6.5	00.0	100.
4	6.5	6.5	3.2	3.2	00.0	3.2	3.2	12.9	16.1	6.5	3.2	00.0	9.7	6.5	9.7	9.7	00.0	100.
5	12.9	00.0	3.2	00.0	3.2	00.0	3.2	16.1	6.5	12.9	00.0	00.0	9.7	3.2	19.4	9.7	00.0	100.
6	9.7	3.2	00.0	00.0	00.0	3.2	00.0	16.1	22.6	3.2	00.0	3.2	6.5	9.7	16.1	6.5	00.0	100.
7	6.5	9.7	00.0	00.0	3.2	00.0	00.0	9.7	22.6	9.7	00.0	00.0	3.2	16.1	12.9	6.5	00.0	100.
8	6.5	6.5	00.0	6.5	3.2	00.0	3.2	12.9	16.1	3.2	00.0	3.2	3.2	12.9	16.1	6.5	00.0	100.
9	12.9	3.2	00.0	00.0	6.5	6.5	00.0	9.7	16.1	00.0	6.5	3.2	00.0	16.1	12.9	6.5	00.0	100.
10	9.7	12.9	00.0	00.0	6.5	6.5	3.2	00.0	16.1	6.5	00.0	6.5	00.0	12.9	12.9	6.5	00.0	100.
11	6.5	6.5	6.5	3.2	6.5	00.0	9.7	3.2	9.7	6.5	6.5	3.2	00.0	6.5	16.1	9.7	00.0	100.
12	9.7	3.2	3.2	00.0	00.0	9.7	9.7	3.2	9.7	3.2	9.7	3.2	00.0	3.2	25.8	6.5	00.0	100.
13	9.7	6.5	00.0	00.0	00.0	3.2	12.9	3.2	6.5	12.9	6.5	3.2	00.0	6.5	22.6	6.5	00.0	100.
14	9.7	6.5	00.0	00.0	00.0	6.5	9.7	00.0	9.7	9.7	9.7	00.0	9.7	3.2	16.1	9.7	00.0	100.
15	6.5	6.5	00.0	00.0	3.2	3.2	6.5	00.0	12.9	6.5	9.7	3.2	9.7	6.5	12.9	12.9	00.0	100.
16	6.5	6.5	00.0	00.0	00.0	6.5	00.0	3.2	3.2	9.7	9.7	9.7	6.5	12.9	16.1	9.7	00.0	100.
17	6.5	3.2	3.2	00.0	3.2	00.0	3.2	3.2	3.2	9.7	16.1	3.2	3.2	6.5	19.4	16.1	00.0	100.
18	9.7	00.0	3.2	00.0	3.2	00.0	3.2	3.2	6.5	12.9	9.7	00.0	3.2	9.7	16.1	19.4	00.0	100.
19	6.5	00.0	3.2	3.2	00.0	00.0	3.2	6.5	16.1	6.5	9.7	3.2	3.2	6.5	16.1	16.1	00.0	100.
20	3.2	00.0	6.5	00.0	3.2	00.0	3.2	00.0	16.1	9.7	12.9	6.5	3.2	00.0	22.6	12.9	00.0	100.
21	3.2	00.0	6.5	3.2	00.0	3.2	3.2	12.9	9.7	3.2	16.1	6.5	00.0	6.5	16.1	9.7	00.0	100.
22	9.7	00.0	00.0	3.2	00.0	3.2	9.7	9.7	9.7	6.5	12.9	6.5	00.0	3.2	19.4	6.5	00.0	100.
23	6.5	3.2	00.0	6.5	00.0	00.0	6.5	12.9	12.9	12.9	3.2	3.2	6.5	00.0	16.1	9.7	00.0	100.
24	6.5	00.0	00.0	3.2	00.0	3.2	9.7	9.7	22.6	6.5	3.2	6.5	3.2	6.5	9.7	9.7	00.0	100.
ALL	7.8	3.5	1.6	1.5	2.2	2.6	5.1	8.2	13.2	7.4	7.0	3.9	3.5	7.5	15.7	9.3	.1	100.

NUMBER OF OBS = 744

NPPD-COOPER NUCLEAR STATION 10-M WIND DIRECTION 2012

PROGRAM: WINPER
VERSION: PC-1.0

HOURLY WIND ROSES (PERCENT)

FEBRUARY

WIND DIRECTION

HR. OF DAY	N	NNE	NE	ENE	E	ESE	SE	SSE	S	SSW	SW	WSW	W	WNW	NW	NNW	CALM	TOTAL
1	10.3	3.4	3.4	00.0	3.4	00.0	13.8	3.4	6.9	10.3	13.8	6.9	3.4	3.4	6.9	10.3	00.0	100.
2	3.4	3.4	00.0	00.0	3.4	6.9	10.3	6.9	6.9	6.9	10.3	00.0	6.9	6.9	6.9	20.7	00.0	100.
3	3.4	13.8	00.0	00.0	3.4	00.0	13.8	6.9	6.9	6.9	3.4	6.9	3.4	6.9	3.4	20.7	00.0	100.
4	6.9	3.4	00.0	00.0	3.4	3.4	6.9	10.3	3.4	00.0	10.3	10.3	3.4	3.4	17.2	17.2	00.0	100.
5	6.9	3.4	00.0	00.0	6.9	00.0	6.9	6.9	00.0	20.7	3.4	6.9	3.4	13.8	10.3	10.3	00.0	100.
6	10.3	3.4	00.0	3.4	3.4	3.4	6.9	3.4	10.3	3.4	6.9	10.3	3.4	20.7	00.0	10.3	00.0	100.
7	6.9	6.9	3.4	3.4	00.0	00.0	6.9	3.4	10.3	6.9	6.9	6.9	6.9	10.3	10.3	10.3	00.0	100.
8	6.9	00.0	3.4	00.0	3.4	00.0	6.9	00.0	10.3	6.9	13.8	00.0	17.2	10.3	10.3	10.3	00.0	100.
9	13.8	00.0	00.0	6.9	00.0	00.0	10.3	00.0	13.8	3.4	6.9	00.0	13.8	6.9	10.3	13.8	00.0	100.
10	6.9	3.4	6.9	6.9	00.0	00.0	6.9	10.3	10.3	6.9	00.0	10.3	6.9	6.9	6.9	10.3	00.0	100.
11	13.8	3.4	00.0	6.9	3.4	00.0	6.9	10.3	10.3	3.4	00.0	13.8	6.9	6.9	6.9	6.9	00.0	100.
12	17.2	3.4	00.0	00.0	3.4	00.0	10.3	10.3	10.3	6.9	00.0	6.9	10.3	6.9	10.3	3.4	00.0	100.
13	17.2	3.4	00.0	00.0	3.4	3.4	6.9	3.4	13.8	3.4	3.4	3.4	13.8	6.9	10.3	6.9	00.0	100.
14	13.8	6.9	3.4	00.0	3.4	00.0	13.8	3.4	10.3	6.9	00.0	3.4	10.3	13.8	10.3	00.0	00.0	100.
15	13.8	6.9	00.0	00.0	3.4	3.4	13.8	6.9	3.4	6.9	3.4	00.0	13.8	13.8	6.9	3.4	00.0	100.
16	17.2	3.4	00.0	3.4	3.4	00.0	10.3	6.9	6.9	3.4	6.9	00.0	17.2	10.3	3.4	6.9	00.0	100.
17	13.8	6.9	00.0	00.0	6.9	3.4	3.4	10.3	6.9	3.4	3.4	6.9	13.8	10.3	3.4	6.9	00.0	100.
18	13.8	3.4	00.0	00.0	6.9	3.4	10.3	3.4	10.3	00.0	6.9	3.4	6.9	10.3	6.9	13.8	00.0	100.
19	10.3	13.8	00.0	6.9	3.4	00.0	13.8	00.0	10.3	3.4	6.9	3.4	00.0	10.3	10.3	6.9	00.0	100.
20	13.8	3.4	3.4	3.4	6.9	00.0	13.8	00.0	17.2	6.9	3.4	00.0	00.0	00.0	20.7	6.9	00.0	100.
21	10.3	3.4	3.4	3.4	00.0	3.4	17.2	6.9	13.8	6.9	3.4	00.0	00.0	3.4	13.8	10.3	00.0	100.
22	17.2	3.4	3.4	00.0	3.4	3.4	17.2	3.4	13.8	3.4	3.4	3.4	00.0	3.4	17.2	3.4	00.0	100.
23	13.8	00.0	3.4	00.0	00.0	6.9	10.3	6.9	10.3	10.3	3.4	6.9	3.4	6.9	13.8	3.4	00.0	100.
24	13.8	00.0	3.4	00.0	3.4	3.4	10.3	6.9	6.9	10.3	6.9	3.4	10.3	3.4	6.9	10.3	00.0	100.
ALL	11.5	4.3	1.6	1.9	3.3	1.9	10.3	5.5	9.3	6.2	5.3	4.7	7.3	8.2	9.3	9.3	00.0	100.

NUMBER OF OBS = 696

NPPD-COOPER NUCLEAR STATION 10-M WIND DIRECTION 2012

PROGRAM: WINPER
VERSION: PC-1.0

HOURLY WIND ROSES (PERCENT)

MARCH

WIND DIRECTION

HR. OF DAY	N	NNE	NE	ENE	E	ESE	SE	SSE	S	SSW	SW	WSW	W	WNW	NW	NNW	CALM	TOTAL
1	3.2	3.2	00.0	00.0	3.2	00.0	6.5	19.4	29.0	9.7	3.2	00.0	3.2	9.7	3.2	6.5	00.0	100.
2	9.7	3.2	00.0	3.2	3.2	6.5	00.0	16.1	22.6	16.1	00.0	6.5	6.5	3.2	00.0	3.2	00.0	100.
3	6.5	3.2	3.2	00.0	3.2	6.5	00.0	12.9	38.7	12.9	00.0	3.2	3.2	3.2	00.0	3.2	00.0	100.
4	6.5	3.2	3.2	00.0	00.0	12.9	00.0	19.4	35.5	3.2	00.0	3.2	00.0	3.2	9.7	00.0	00.0	100.
5	6.5	00.0	3.2	00.0	3.2	3.2	3.2	25.8	19.4	16.1	6.5	00.0	3.2	00.0	6.5	3.2	00.0	100.
6	9.7	00.0	00.0	00.0	00.0	9.7	3.2	16.1	38.7	9.7	00.0	00.0	3.2	00.0	9.7	00.0	00.0	100.
7	6.5	3.2	00.0	00.0	00.0	3.2	19.4	12.9	25.8	19.4	00.0	00.0	3.2	6.5	00.0	00.0	00.0	100.
8	3.2	00.0	3.2	00.0	3.2	9.7	6.5	16.1	32.3	12.9	00.0	00.0	9.7	00.0	00.0	3.2	00.0	100.
9	3.2	00.0	00.0	00.0	9.7	9.7	16.1	12.9	9.7	22.6	00.0	00.0	6.5	3.2	00.0	6.5	00.0	100.
10	00.0	00.0	00.0	3.2	00.0	12.9	12.9	9.7	16.1	19.4	6.5	00.0	00.0	9.7	3.2	6.5	00.0	100.
11	3.2	00.0	00.0	3.2	3.2	12.9	3.2	16.1	6.5	22.6	6.5	6.5	00.0	6.5	6.5	3.2	00.0	100.
12	3.2	00.0	00.0	3.2	3.2	6.5	12.9	9.7	6.5	16.1	9.7	6.5	3.2	12.9	00.0	6.5	00.0	100.
13	6.5	00.0	00.0	00.0	9.7	3.2	12.9	6.5	16.1	6.5	6.5	6.5	3.2	3.2	16.1	3.2	00.0	100.
14	6.5	3.2	3.2	00.0	3.2	3.2	9.7	9.7	16.1	9.7	6.5	9.7	00.0	00.0	12.9	6.5	00.0	100.
15	6.5	6.5	00.0	00.0	3.2	9.7	6.5	6.5	19.4	12.9	6.5	6.5	00.0	3.2	12.9	00.0	00.0	100.
16	3.2	3.2	3.2	00.0	3.2	6.5	9.7	3.2	25.8	9.7	6.5	6.5	00.0	6.5	3.2	9.7	00.0	100.
17	6.5	00.0	3.2	00.0	9.7	3.2	3.2	6.5	25.8	9.7	6.5	00.0	6.5	3.2	6.5	9.7	00.0	100.
18	00.0	6.5	00.0	3.2	6.5	3.2	6.5	12.9	16.1	9.7	6.5	00.0	6.5	3.2	9.7	9.7	00.0	100.
19	3.2	6.5	00.0	00.0	6.5	00.0	6.5	19.4	19.4	6.5	00.0	9.7	3.2	9.7	6.5	3.2	00.0	100.
20	3.2	3.2	00.0	00.0	6.5	3.2	00.0	29.0	16.1	9.7	00.0	00.0	12.9	3.2	3.2	9.7	00.0	100.
21	3.2	3.2	00.0	00.0	6.5	3.2	3.2	25.8	25.8	6.5	00.0	00.0	9.7	3.2	3.2	6.5	00.0	100.
22	6.5	00.0	00.0	00.0	6.5	9.7	00.0	19.4	25.8	9.7	00.0	3.2	3.2	3.2	6.5	6.5	00.0	100.
23	6.5	3.2	00.0	00.0	00.0	6.5	6.5	19.4	19.4	12.9	6.5	00.0	3.2	3.2	3.2	9.7	00.0	100.
24	6.5	00.0	3.2	00.0	6.5	3.2	00.0	6.5	32.3	16.1	3.2	00.0	3.2	3.2	3.2	12.9	00.0	100.
ALL	5.0	2.2	1.1	.7	4.2	6.2	6.2	14.7	22.4	12.5	3.4	2.8	3.9	4.3	5.2	5.4	00.0	100.

NUMBER OF OBS = 744

NPPD-COOPER NUCLEAR STATION 10-M WIND DIRECTION 2012

PROGRAM: WINPER
VERSION: PC-1.0

HOURLY WIND ROSES (PERCENT)

JAN-MAR

WIND DIRECTION

HR. OF DAY	N	NNE	NE	ENE	E	ESE	SE	SSE	S	SSW	SW	WSW	W	WNW	NW	NNW	CALM	TOTAL
1	6.6	2.2	1.1	00.0	3.3	00.0	9.9	12.1	18.7	8.8	8.8	4.4	2.2	7.7	6.6	7.7	00.0	100.
2	6.6	2.2	00.0	1.1	4.4	5.5	4.4	14.3	14.3	8.8	6.6	4.4	4.4	6.6	6.6	8.8	1.1	100.
3	6.6	5.5	1.1	1.1	2.2	2.2	6.6	12.1	22.0	9.9	2.2	5.5	3.3	5.5	4.4	9.9	00.0	100.
4	6.6	4.4	2.2	1.1	1.1	6.6	3.3	14.3	18.7	3.3	4.4	4.4	4.4	4.4	12.1	8.8	00.0	100.
5	8.8	1.1	2.2	00.0	4.4	1.1	4.4	16.5	8.8	16.5	3.3	2.2	5.5	5.5	12.1	7.7	00.0	100.
6	9.9	2.2	00.0	1.1	1.1	5.5	3.3	12.1	24.2	5.5	2.2	4.4	4.4	9.9	8.8	5.5	00.0	100.
7	6.6	6.6	1.1	1.1	1.1	1.1	8.8	8.8	19.8	12.1	2.2	2.2	4.4	11.0	7.7	5.5	00.0	100.
8	5.5	2.2	2.2	2.2	3.3	3.3	5.5	9.9	19.8	7.7	4.4	1.1	9.9	7.7	8.8	6.6	00.0	100.
9	9.9	1.1	00.0	2.2	5.5	5.5	8.8	7.7	13.2	8.8	4.4	1.1	6.6	8.8	7.7	8.8	00.0	100.
10	5.5	5.5	2.2	3.3	2.2	6.6	7.7	6.6	14.3	11.0	2.2	5.5	2.2	9.9	7.7	7.7	00.0	100.
11	7.7	3.3	2.2	4.4	4.4	4.4	6.6	9.9	8.8	11.0	4.4	7.7	2.2	6.6	9.9	6.6	00.0	100.
12	9.9	2.2	1.1	1.1	2.2	5.5	11.0	7.7	8.8	8.8	6.6	5.5	4.4	7.7	12.1	5.5	00.0	100.
13	11.0	3.3	00.0	00.0	4.4	3.3	11.0	4.4	12.1	7.7	5.5	4.4	5.5	5.5	16.5	5.5	00.0	100.
14	9.9	5.5	2.2	00.0	2.2	3.3	11.0	4.4	12.1	8.8	5.5	4.4	6.6	5.5	13.2	5.5	00.0	100.
15	8.8	6.6	00.0	00.0	3.3	5.5	8.8	4.4	12.1	8.8	6.6	3.3	7.7	7.7	11.0	5.5	00.0	100.
16	8.8	4.4	1.1	1.1	2.2	4.4	6.6	4.4	12.1	7.7	7.7	5.5	7.7	9.9	7.7	8.8	00.0	100.
17	8.8	3.3	2.2	00.0	6.6	2.2	3.3	6.6	12.1	7.7	8.8	3.3	7.7	6.6	9.9	11.0	00.0	100.
18	7.7	3.3	1.1	1.1	5.5	2.2	6.6	6.6	11.0	7.7	7.7	1.1	5.5	7.7	11.0	14.3	00.0	100.
19	6.6	6.6	1.1	3.3	3.3	00.0	7.7	8.8	15.4	5.5	5.5	5.5	2.2	8.8	11.0	8.8	00.0	100.
20	6.6	2.2	3.3	1.1	5.5	1.1	5.5	9.9	16.5	8.8	5.5	2.2	5.5	1.1	15.4	9.9	00.0	100.
21	5.5	2.2	3.3	2.2	2.2	3.3	7.7	15.4	16.5	5.5	6.6	2.2	3.3	4.4	11.0	8.8	00.0	100.
22	11.0	1.1	1.1	1.1	3.3	5.5	8.8	11.0	16.5	6.6	5.5	4.4	1.1	3.3	14.3	5.5	00.0	100.
23	8.8	2.2	1.1	2.2	00.0	4.4	7.7	13.2	14.3	12.1	4.4	3.3	4.4	3.3	11.0	7.7	00.0	100.
24	8.8	00.0	2.2	1.1	3.3	3.3	6.6	7.7	20.9	11.0	4.4	3.3	5.5	4.4	6.6	11.0	00.0	100.
ALL	8.0	3.3	1.4	1.3	3.2	3.6	7.1	9.5	15.1	8.7	5.2	3.8	4.9	6.6	10.1	8.0	.0	100.

NUMBER OF OBS = 2184

NPPD-COOPER NUCLEAR STATION 10-M WIND DIRECTION 2012

PROGRAM: WINPER
VERSION: PC-1.0

HOURLY WIND ROSES (PERCENT)

APRIL

WIND DIRECTION

HR. OF DAY	N	NNE	NE	ENE	E	ESE	SE	SSE	S	SSW	SW	WSW	W	WNW	NW	NNW	CALM	TOTAL
1	13.3	6.7	3.3	3.3	00.0	3.3	10.0	16.7	13.3	6.7	00.0	00.0	3.3	3.3	6.7	10.0	00.0	100.
2	10.0	13.3	3.3	3.3	00.0	3.3	6.7	6.7	30.0	00.0	00.0	3.3	00.0	6.7	10.0	3.3	00.0	100.
3	13.3	3.3	3.3	6.7	6.7	00.0	10.0	6.7	23.3	3.3	00.0	00.0	00.0	3.3	13.3	6.7	00.0	100.
4	3.3	6.7	3.3	10.0	3.3	6.7	10.0	13.3	13.3	00.0	00.0	3.3	00.0	6.7	6.7	13.3	00.0	100.
5	6.7	3.3	3.3	3.3	3.3	13.3	10.0	13.3	13.3	3.3	3.3	00.0	3.3	00.0	13.3	6.7	00.0	100.
6	6.7	6.7	00.0	3.3	3.3	10.0	10.0	16.7	16.7	3.3	00.0	3.3	3.3	00.0	10.0	6.7	00.0	100.
7	6.7	3.3	6.7	6.7	00.0	6.7	13.3	13.3	6.7	3.3	00.0	00.0	3.3	3.3	13.3	13.3	00.0	100.
8	3.3	10.0	3.3	10.0	3.3	6.7	13.3	13.3	13.3	00.0	00.0	3.3	00.0	10.0	3.3	6.7	00.0	100.
9	3.3	6.7	00.0	10.0	00.0	6.7	33.3	00.0	13.3	6.7	3.3	00.0	00.0	00.0	6.7	10.0	00.0	100.
10	3.3	13.3	3.3	10.0	00.0	6.7	16.7	6.7	6.7	6.7	6.7	3.3	00.0	3.3	3.3	10.0	00.0	100.
11	3.3	6.7	3.3	10.0	3.3	6.7	13.3	3.3	13.3	3.3	6.7	00.0	6.7	3.3	6.7	10.0	00.0	100.
12	10.0	6.7	13.3	00.0	6.7	3.3	13.3	3.3	10.0	10.0	6.7	00.0	00.0	00.0	3.3	13.3	00.0	100.
13	10.0	6.7	10.0	6.7	6.7	6.7	6.7	3.3	6.7	10.0	13.3	00.0	00.0	3.3	3.3	6.7	00.0	100.
14	16.7	3.3	3.3	10.0	3.3	6.7	10.0	00.0	13.3	10.0	00.0	10.0	00.0	3.3	00.0	10.0	00.0	100.
15	13.3	3.3	6.7	13.3	00.0	6.7	6.7	6.7	6.7	10.0	3.3	3.3	6.7	3.3	00.0	10.0	00.0	100.
16	13.3	00.0	3.3	13.3	3.3	3.3	13.3	00.0	6.7	6.7	13.3	00.0	3.3	3.3	6.7	10.0	00.0	100.
17	13.3	3.3	6.7	10.0	6.7	3.3	10.0	3.3	10.0	6.7	6.7	00.0	3.3	00.0	10.0	6.7	00.0	100.
18	3.3	13.3	6.7	3.3	3.3	6.7	6.7	00.0	13.3	3.3	6.7	3.3	3.3	3.3	6.7	16.7	00.0	100.
19	6.7	16.7	10.0	3.3	3.3	6.7	6.7	3.3	10.0	3.3	13.3	00.0	00.0	3.3	6.7	6.7	00.0	100.
20	16.7	3.3	6.7	6.7	6.7	3.3	10.0	6.7	6.7	10.0	00.0	3.3	00.0	00.0	10.0	10.0	00.0	100.
21	13.3	3.3	6.7	6.7	3.3	00.0	13.3	10.0	10.0	3.3	3.3	3.3	00.0	00.0	10.0	13.3	00.0	100.
22	23.3	3.3	6.7	3.3	3.3	3.3	16.7	00.0	13.3	00.0	00.0	6.7	3.3	00.0	3.3	13.3	00.0	100.
23	20.0	3.3	6.7	00.0	3.3	6.7	16.7	00.0	13.3	00.0	00.0	00.0	6.7	3.3	10.0	10.0	00.0	100.
24	10.0	10.0	6.7	3.3	00.0	3.3	16.7	3.3	16.7	00.0	3.3	6.7	3.3	00.0	6.7	10.0	00.0	100.
ALL	10.1	6.5	5.3	6.5	3.1	5.4	12.2	6.3	12.5	4.6	3.8	2.2	2.1	2.6	7.1	9.7	00.0	100.

NUMBER OF OBS = 720

NPPD-COOPER NUCLEAR STATION 10-M WIND DIRECTION 2012

PROGRAM: WINPER
VERSION: PC-1.0

HOURLY WIND ROSES (PERCENT)

MAY

WIND DIRECTION

HR. OF DAY	N	NNE	NE	ENE	E	ESE	SE	SSE	S	SSW	SW	WSW	W	WNW	NW	NNW	CALM	TOTAL
1	12.9	3.2	00.0	3.2	00.0	00.0	3.2	25.8	19.4	6.5	00.0	3.2	6.5	00.0	3.2	12.9	00.0	100.
2	19.4	3.2	3.2	00.0	3.2	00.0	6.5	16.1	9.7	16.1	3.2	00.0	3.2	3.2	3.2	9.7	00.0	100.
3	19.4	00.0	3.2	00.0	00.0	00.0	3.2	16.1	19.4	3.2	6.5	6.5	3.2	3.2	9.7	6.5	00.0	100.
4	12.9	00.0	3.2	00.0	00.0	00.0	6.5	25.8	12.9	3.2	3.2	6.5	00.0	6.5	3.2	16.1	00.0	100.
5	6.5	6.5	3.2	00.0	3.2	00.0	9.7	19.4	19.4	3.2	6.5	00.0	00.0	6.5	3.2	12.9	00.0	100.
6	16.1	3.2	00.0	00.0	3.2	3.2	6.5	22.6	22.6	3.2	6.5	00.0	00.0	00.0	9.7	3.2	00.0	100.
7	16.1	6.5	00.0	00.0	00.0	00.0	16.1	19.4	19.4	3.2	3.2	3.2	00.0	00.0	3.2	9.7	00.0	100.
8	9.7	6.5	3.2	6.5	00.0	6.5	6.5	19.4	16.1	00.0	6.5	00.0	00.0	6.5	6.5	6.5	00.0	100.
9	6.5	6.5	9.7	00.0	3.2	3.2	12.9	6.5	22.6	3.2	00.0	3.2	00.0	9.7	9.7	3.2	00.0	100.
10	3.2	9.7	3.2	6.5	00.0	6.5	6.5	9.7	22.6	6.5	3.2	00.0	00.0	3.2	6.5	12.9	00.0	100.
11	9.7	00.0	9.7	3.2	00.0	3.2	6.5	9.7	32.3	3.2	3.2	00.0	00.0	3.2	3.2	12.9	00.0	100.
12	9.7	00.0	9.7	3.2	3.2	3.2	3.2	9.7	29.0	00.0	9.7	00.0	00.0	6.5	00.0	12.9	00.0	100.
13	19.4	3.2	3.2	00.0	3.2	3.2	6.5	6.5	32.3	00.0	6.5	3.2	00.0	6.5	00.0	6.5	00.0	100.
14	9.7	3.2	3.2	3.2	3.2	00.0	00.0	19.4	25.8	00.0	00.0	6.5	3.2	3.2	3.2	16.1	00.0	100.
15	9.7	9.7	3.2	3.2	00.0	00.0	3.2	16.1	25.8	3.2	00.0	3.2	3.2	9.7	00.0	9.7	00.0	100.
16	9.7	6.5	6.5	3.2	00.0	3.2	00.0	12.9	29.0	00.0	00.0	00.0	3.2	6.5	6.5	12.9	00.0	100.
17	19.4	00.0	3.2	6.5	00.0	3.2	3.2	16.1	19.4	3.2	00.0	3.2	00.0	3.2	6.5	12.9	00.0	100.
18	9.7	00.0	00.0	3.2	6.5	00.0	3.2	16.1	25.8	00.0	3.2	00.0	00.0	00.0	6.5	25.8	00.0	100.
19	16.1	00.0	00.0	3.2	6.5	00.0	3.2	16.1	25.8	00.0	3.2	00.0	00.0	00.0	9.7	16.1	00.0	100.
20	9.7	00.0	00.0	3.2	3.2	3.2	6.5	16.1	22.6	3.2	00.0	00.0	00.0	00.0	9.7	22.6	00.0	100.
21	12.9	00.0	00.0	6.5	3.2	00.0	6.5	25.8	9.7	6.5	00.0	00.0	00.0	3.2	3.2	22.6	00.0	100.
22	16.1	6.5	00.0	3.2	3.2	00.0	6.5	19.4	16.1	6.5	00.0	00.0	00.0	00.0	3.2	19.4	00.0	100.
23	16.1	3.2	3.2	00.0	6.5	00.0	00.0	22.6	22.6	3.2	00.0	3.2	00.0	00.0	3.2	16.1	00.0	100.
24	12.9	3.2	00.0	3.2	00.0	3.2	00.0	25.8	19.4	3.2	3.2	00.0	00.0	3.2	3.2	19.4	00.0	100.
ALL	12.6	3.4	3.0	2.6	2.2	1.7	5.2	17.2	21.6	3.4	2.8	1.7	.9	3.5	4.8	13.3	00.0	100.

NUMBER OF OBS = 744

NPPD-COOPER NUCLEAR STATION 10-M WIND DIRECTION 2012

PROGRAM: WINPER
VERSION: PC-1.0

HOURLY WIND ROSES (PERCENT)

JUNE

WIND DIRECTION

HR. OF DAY	N	NNE	NE	ENE	E	ESE	SE	SSE	S	SSW	SW	WSW	W	WNW	NW	NNW	CALM	TOTAL
1	6.7	00.0	00.0	3.3	3.3	6.7	10.0	13.3	23.3	13.3	3.3	00.0	3.3	00.0	00.0	13.3	00.0	100.
2	3.3	00.0	00.0	3.3	3.3	3.3	6.7	13.3	20.0	26.7	6.7	3.3	00.0	3.3	6.7	00.0	00.0	100.
3	00.0	3.3	00.0	3.3	00.0	6.7	13.3	10.0	20.0	10.0	6.7	3.3	3.3	3.3	3.3	13.3	00.0	100.
4	00.0	3.3	3.3	3.3	00.0	6.7	10.0	6.7	26.7	13.3	10.0	00.0	3.3	6.7	6.7	00.0	00.0	100.
5	6.7	00.0	00.0	3.3	00.0	00.0	6.7	10.0	26.7	20.0	13.3	3.3	3.3	00.0	3.3	3.3	00.0	100.
6	10.0	00.0	00.0	3.3	00.0	3.3	13.3	10.0	36.7	6.7	00.0	6.7	6.7	3.3	00.0	00.0	00.0	100.
7	10.0	00.0	00.0	3.3	00.0	6.7	13.3	6.7	33.3	6.7	3.3	3.3	6.7	3.3	3.3	00.0	00.0	100.
8	00.0	6.7	00.0	3.3	3.3	00.0	16.7	13.3	23.3	16.7	00.0	00.0	3.3	6.7	6.7	00.0	00.0	100.
9	3.3	3.3	3.3	3.3	3.3	00.0	6.7	10.0	26.7	23.3	3.3	00.0	00.0	10.0	3.3	00.0	00.0	100.
10	3.3	3.3	6.7	3.3	3.3	00.0	6.7	16.7	16.7	20.0	6.7	00.0	00.0	00.0	6.7	6.7	00.0	100.
11	10.0	00.0	3.3	6.7	3.3	00.0	6.7	23.3	13.3	16.7	3.3	6.7	00.0	00.0	6.7	00.0	00.0	100.
12	6.7	3.3	00.0	3.3	00.0	3.3	13.3	16.7	16.7	10.0	6.7	3.3	00.0	3.3	6.7	6.7	00.0	100.
13	6.7	00.0	3.3	6.7	00.0	00.0	10.0	20.0	20.0	13.3	00.0	6.7	00.0	3.3	6.7	3.3	00.0	100.
14	6.7	3.3	00.0	00.0	6.7	00.0	20.0	10.0	26.7	3.3	00.0	10.0	3.3	00.0	6.7	3.3	00.0	100.
15	6.7	3.3	00.0	3.3	3.3	3.3	13.3	13.3	20.0	10.0	3.3	6.7	00.0	00.0	6.7	6.7	00.0	100.
16	10.0	3.3	00.0	6.7	3.3	3.3	13.3	13.3	16.7	6.7	3.3	6.7	00.0	3.3	3.3	6.7	00.0	100.
17	10.0	10.0	00.0	3.3	6.7	00.0	16.7	6.7	20.0	6.7	3.3	6.7	00.0	00.0	3.3	6.7	00.0	100.
18	6.7	10.0	00.0	10.0	00.0	3.3	13.3	10.0	16.7	13.3	3.3	00.0	00.0	3.3	00.0	10.0	00.0	100.
19	10.0	00.0	10.0	6.7	00.0	6.7	10.0	10.0	23.3	6.7	3.3	00.0	00.0	00.0	00.0	13.3	00.0	100.
20	6.7	00.0	6.7	13.3	3.3	3.3	13.3	10.0	20.0	3.3	3.3	00.0	00.0	6.7	00.0	10.0	00.0	100.
21	3.3	3.3	00.0	10.0	00.0	3.3	16.7	6.7	16.7	10.0	3.3	3.3	6.7	00.0	00.0	16.7	00.0	100.
22	13.3	6.7	00.0	3.3	3.3	00.0	16.7	3.3	16.7	23.3	00.0	00.0	00.0	00.0	3.3	10.0	00.0	100.
23	3.3	00.0	3.3	6.7	3.3	00.0	13.3	6.7	26.7	10.0	10.0	00.0	00.0	00.0	3.3	13.3	00.0	100.
24	16.7	00.0	3.3	00.0	00.0	6.7	13.3	10.0	20.0	10.0	13.3	00.0	00.0	00.0	00.0	6.7	00.0	100.
ALL	6.7	2.6	1.8	4.7	2.1	2.8	12.2	11.2	21.9	12.5	4.6	2.9	1.7	2.4	3.6	6.3	00.0	100.

NUMBER OF OBS = 720

NPPD-COOPER NUCLEAR STATION 10-M WIND DIRECTION 2012

PROGRAM: WINPER
VERSION: PC-1.0

HOURLY WIND ROSES (PERCENT)

APR-JUN

WIND DIRECTION

HR. OF DAY	N	NNE	NE	ENE	E	ESE	SE	SSE	S	SSW	SW	WSW	W	WNW	NW	NNW	CALM	TOTAL
1	11.0	3.3	1.1	3.3	1.1	3.3	7.7	18.7	18.7	8.8	1.1	1.1	4.4	1.1	3.3	12.1	00.0	100.
2	11.0	5.5	2.2	2.2	2.2	2.2	6.6	12.1	19.8	14.3	3.3	2.2	1.1	4.4	6.6	4.4	00.0	100.
3	11.0	2.2	2.2	3.3	2.2	2.2	8.8	11.0	20.9	5.5	4.4	3.3	2.2	3.3	8.8	8.8	00.0	100.
4	5.5	3.3	3.3	4.4	1.1	4.4	8.8	15.4	17.6	5.5	4.4	3.3	1.1	6.6	5.5	9.9	00.0	100.
5	6.6	3.3	2.2	2.2	2.2	4.4	8.8	14.3	19.8	8.8	7.7	1.1	2.2	2.2	6.6	7.7	00.0	100.
6	11.0	3.3	00.0	2.2	2.2	5.5	9.9	16.5	25.3	4.4	2.2	3.3	3.3	1.1	6.6	3.3	00.0	100.
7	11.0	3.3	2.2	3.3	00.0	4.4	14.3	13.2	19.8	4.4	2.2	2.2	3.3	2.2	6.6	7.7	00.0	100.
8	4.4	7.7	2.2	6.6	2.2	4.4	12.1	15.4	17.6	5.5	2.2	1.1	1.1	7.7	5.5	4.4	00.0	100.
9	4.4	5.5	4.4	4.4	2.2	3.3	17.6	5.5	20.9	11.0	2.2	1.1	00.0	6.6	6.6	4.4	00.0	100.
10	3.3	8.8	4.4	6.6	1.1	4.4	9.9	11.0	15.4	11.0	5.5	1.1	00.0	2.2	5.5	9.9	00.0	100.
11	7.7	2.2	5.5	6.6	2.2	3.3	8.8	12.1	19.8	7.7	4.4	2.2	2.2	2.2	5.5	7.7	00.0	100.
12	8.8	3.3	7.7	2.2	3.3	3.3	9.9	9.9	18.7	6.6	7.7	1.1	00.0	3.3	3.3	11.0	00.0	100.
13	12.1	3.3	5.5	4.4	3.3	3.3	7.7	9.9	19.8	7.7	6.6	3.3	00.0	4.4	3.3	5.5	00.0	100.
14	11.0	3.3	2.2	4.4	4.4	2.2	9.9	9.9	22.0	4.4	00.0	8.8	2.2	2.2	3.3	9.9	00.0	100.
15	9.9	5.5	3.3	6.6	1.1	3.3	7.7	12.1	17.6	7.7	2.2	4.4	3.3	4.4	2.2	8.8	00.0	100.
16	11.0	3.3	3.3	7.7	2.2	3.3	8.8	8.8	17.6	4.4	5.5	2.2	2.2	4.4	5.5	9.9	00.0	100.
17	14.3	4.4	3.3	6.6	4.4	2.2	9.9	8.8	16.5	5.5	3.3	3.3	1.1	1.1	6.6	8.8	00.0	100.
18	6.6	7.7	2.2	5.5	3.3	3.3	7.7	8.8	18.7	5.5	4.4	1.1	1.1	2.2	4.4	17.6	00.0	100.
19	11.0	5.5	6.6	4.4	3.3	4.4	6.6	9.9	19.8	3.3	6.6	00.0	00.0	1.1	5.5	12.1	00.0	100.
20	11.0	1.1	4.4	7.7	4.4	3.3	9.9	11.0	16.5	5.5	1.1	1.1	00.0	2.2	6.6	14.3	00.0	100.
21	9.9	2.2	2.2	7.7	2.2	1.1	12.1	14.3	12.1	6.6	2.2	2.2	2.2	1.1	4.4	17.6	00.0	100.
22	17.6	5.5	2.2	3.3	3.3	1.1	13.2	7.7	15.4	9.9	00.0	2.2	1.1	00.0	3.3	14.3	00.0	100.
23	13.2	2.2	4.4	2.2	4.4	2.2	9.9	9.9	20.9	4.4	3.3	1.1	2.2	1.1	5.5	13.2	00.0	100.
24	13.2	4.4	3.3	2.2	00.0	4.4	9.9	13.2	18.7	4.4	6.6	2.2	1.1	1.1	3.3	12.1	00.0	100.
ALL	9.8	4.2	3.3	4.6	2.4	3.3	9.8	11.6	18.7	6.8	3.7	2.3	1.6	2.8	5.2	9.8	00.0	100.

NUMBER OF OBS = 2184

NPPD-COOPER NUCLEAR STATION 10-M WIND DIRECTION 2012

PROGRAM: WINPER
VERSION: PC-1.0

HOURLY WIND ROSES (PERCENT)

JAN-JUN

WIND DIRECTION

HR. OF DAY	N	NNE	NE	ENE	E	ESE	SE	SSE	S	SSW	SW	WSW	W	WNW	NW	NNW	CALM	TOTAL
1	8.8	2.7	1.1	1.6	2.2	1.6	8.8	15.4	18.7	8.8	4.9	2.7	3.3	4.4	4.9	9.9	00.0	100.
2	8.8	3.8	1.1	1.6	3.3	3.8	5.5	13.2	17.0	11.5	4.9	3.3	2.7	5.5	6.6	6.6	.5	100.
3	8.8	3.8	1.6	2.2	2.2	2.2	7.7	11.5	21.4	7.7	3.3	4.4	2.7	4.4	6.6	9.3	00.0	100.
4	6.0	3.8	2.7	2.7	1.1	5.5	6.0	14.8	18.1	4.4	4.4	3.8	2.7	5.5	8.8	9.3	00.0	100.
5	7.7	2.2	2.2	1.1	3.3	2.7	6.6	15.4	14.3	12.6	5.5	1.6	3.8	3.8	9.3	7.7	00.0	100.
6	10.4	2.7	00.0	1.6	1.6	5.5	6.6	14.3	24.7	4.9	2.2	3.8	3.8	5.5	7.7	4.4	00.0	100.
7	8.8	4.9	1.6	2.2	.5	2.7	11.5	11.0	19.8	8.2	2.2	2.2	3.8	6.6	7.1	6.6	00.0	100.
8	4.9	4.9	2.2	4.4	2.7	3.8	8.8	12.6	18.7	6.6	3.3	1.1	5.5	7.7	7.1	5.5	00.0	100.
9	7.1	3.3	2.2	3.3	3.8	4.4	13.2	6.6	17.0	9.9	3.3	1.1	3.3	7.7	7.1	6.6	00.0	100.
10	4.4	7.1	3.3	4.9	1.6	5.5	8.8	8.8	14.8	11.0	3.8	3.3	1.1	6.0	6.6	8.8	00.0	100.
11	7.7	2.7	3.8	5.5	3.3	3.8	7.7	11.0	14.3	9.3	4.4	4.9	2.2	4.4	7.7	7.1	00.0	100.
12	9.3	2.7	4.4	1.6	2.7	4.4	10.4	8.8	13.7	7.7	7.1	3.3	2.2	5.5	7.7	8.2	00.0	100.
13	11.5	3.3	2.7	2.2	3.8	3.3	9.3	7.1	15.9	7.7	6.0	3.8	2.7	4.9	9.9	5.5	00.0	100.
14	10.4	4.4	2.2	2.2	3.3	2.7	10.4	7.1	17.0	6.6	2.7	6.6	4.4	3.8	8.2	7.7	00.0	100.
15	9.3	6.0	1.6	3.3	2.2	4.4	8.2	8.2	14.8	8.2	4.4	3.8	5.5	6.0	6.6	7.1	00.0	100.
16	9.9	3.8	2.2	4.4	2.2	3.8	7.7	6.6	14.8	6.0	6.6	3.8	4.9	7.1	6.6	9.3	00.0	100.
17	11.5	3.8	2.7	3.3	5.5	2.2	6.6	7.7	14.3	6.6	6.0	3.3	4.4	3.8	8.2	9.9	00.0	100.
18	7.1	5.5	1.6	3.3	4.4	2.7	7.1	7.7	14.8	6.6	6.0	1.1	3.3	4.9	7.7	15.9	00.0	100.
19	8.8	6.0	3.8	3.8	3.3	2.2	7.1	9.3	17.6	4.4	6.0	2.7	1.1	4.9	8.2	10.4	00.0	100.
20	8.8	1.6	3.8	4.4	4.9	2.2	7.7	10.4	16.5	7.1	3.3	1.6	2.7	1.6	11.0	12.1	00.0	100.
21	7.7	2.2	2.7	4.9	2.2	2.2	9.9	14.8	14.3	6.0	4.4	2.2	2.7	2.7	7.7	13.2	00.0	100.
22	14.3	3.3	1.6	2.2	3.3	3.3	11.0	9.3	15.9	8.2	2.7	3.3	1.1	1.6	8.8	9.9	00.0	100.
23	11.0	2.2	2.7	2.2	2.2	3.3	8.8	11.5	17.6	8.2	3.8	2.2	3.3	2.2	8.2	10.4	00.0	100.
24	11.0	2.2	2.7	1.6	1.6	3.8	8.2	10.4	19.8	7.7	5.5	2.7	3.3	2.7	4.9	11.5	00.0	100.
ALL	8.9	3.7	2.4	3.0	2.8	3.4	8.5	10.6	16.9	7.8	4.5	3.0	3.2	4.7	7.6	8.9	.0	100.

NUMBER OF OBS = 4368

NPPD-COOPER NUCLEAR STATION 10-M WIND DIRECTION 2012

PROGRAM: WINPER
VERSION: PC-1.0

HOURLY WIND ROSES (PERCENT)

JULY

WIND DIRECTION

HR. OF DAY	N	NNE	NE	ENE	E	ESE	SE	SSE	S	SSW	SW	WSW	W	WNW	NW	NNW	CALM	TOTAL
1	16.1	3.2	00.0	00.0	00.0	00.0	00.0	12.9	19.4	22.6	6.5	00.0	3.2	00.0	3.2	12.9	00.0	100.
2	16.1	00.0	3.2	00.0	3.2	00.0	00.0	9.7	29.0	19.4	3.2	3.2	00.0	00.0	6.5	6.5	00.0	100.
3	12.9	3.2	3.2	00.0	00.0	3.2	00.0	9.7	25.8	19.4	6.5	00.0	00.0	3.2	6.5	6.5	00.0	100.
4	12.9	3.2	3.2	00.0	00.0	00.0	00.0	16.1	19.4	22.6	00.0	6.5	00.0	3.2	9.7	3.2	00.0	100.
5	6.5	3.2	00.0	3.2	00.0	3.2	3.2	3.2	45.2	3.2	9.7	00.0	3.2	9.7	3.2	3.2	00.0	100.
6	16.1	00.0	00.0	6.5	3.2	00.0	3.2	9.7	35.5	6.5	00.0	6.5	3.2	3.2	3.2	3.2	00.0	100.
7	12.9	3.2	3.2	00.0	00.0	9.7	3.2	9.7	45.2	00.0	00.0	00.0	00.0	00.0	6.5	6.5	00.0	100.
8	9.7	9.7	3.2	00.0	00.0	6.5	9.7	19.4	22.6	16.1	00.0	00.0	00.0	00.0	3.2	00.0	00.0	100.
9	12.9	9.7	3.2	3.2	00.0	00.0	12.9	3.2	22.6	25.8	6.5	00.0	00.0	00.0	00.0	00.0	00.0	100.
10	9.7	3.2	16.1	00.0	00.0	3.2	6.5	00.0	22.6	32.3	3.2	3.2	00.0	00.0	00.0	00.0	00.0	100.
11	6.5	6.5	6.5	6.5	00.0	6.5	3.2	9.7	9.7	35.5	9.7	00.0	00.0	00.0	00.0	00.0	00.0	100.
12	9.7	00.0	12.9	3.2	3.2	6.5	3.2	9.7	19.4	22.6	3.2	00.0	00.0	00.0	00.0	6.5	00.0	100.
13	19.4	00.0	6.5	3.2	3.2	6.5	12.9	3.2	32.3	9.7	3.2	00.0	00.0	00.0	00.0	00.0	00.0	100.
14	16.1	3.2	6.5	00.0	3.2	12.9	6.5	9.7	25.8	9.7	3.2	00.0	00.0	00.0	00.0	3.2	00.0	100.
15	9.7	6.5	3.2	3.2	3.2	6.5	6.5	12.9	25.8	12.9	00.0	3.2	00.0	00.0	3.2	3.2	00.0	100.
16	9.7	3.2	6.5	3.2	6.5	9.7	9.7	6.5	19.4	16.1	6.5	00.0	00.0	00.0	00.0	3.2	00.0	100.
17	12.9	9.7	3.2	00.0	00.0	3.2	25.8	9.7	16.1	16.1	00.0	3.2	00.0	00.0	00.0	00.0	00.0	100.
18	9.7	16.1	00.0	00.0	00.0	3.2	22.6	22.6	12.9	3.2	3.2	3.2	3.2	00.0	00.0	00.0	00.0	100.
19	9.7	3.2	12.9	00.0	00.0	3.2	22.6	22.6	12.9	3.2	3.2	00.0	6.5	00.0	00.0	00.0	00.0	100.
20	16.1	6.5	6.5	3.2	3.2	00.0	19.4	19.4	12.9	6.5	3.2	00.0	00.0	00.0	3.2	00.0	00.0	100.
21	19.4	9.7	3.2	00.0	3.2	00.0	9.7	6.5	25.8	3.2	6.5	3.2	00.0	00.0	6.5	3.2	00.0	100.
22	25.8	3.2	00.0	00.0	00.0	00.0	6.5	9.7	12.9	22.6	6.5	3.2	3.2	00.0	6.5	00.0	00.0	100.
23	9.7	3.2	00.0	00.0	00.0	00.0	6.5	6.5	25.8	9.7	00.0	6.5	12.9	00.0	6.5	12.9	00.0	100.
24	22.6	3.2	00.0	00.0	00.0	3.2	00.0	00.0	32.3	12.9	3.2	00.0	00.0	6.5	00.0	16.1	00.0	100.
ALL	13.4	4.7	4.3	1.5	1.3	3.6	8.1	10.1	23.8	14.7	3.6	1.7	1.5	1.1	2.8	3.8	00.0	100.

NUMBER OF OBS = 744

NPPD-COOPER NUCLEAR STATION 10-M WIND DIRECTION 2012

PROGRAM: WINPER
VERSION: PC-1.0

HOURLY WIND ROSES (PERCENT)

AUGUST

WIND DIRECTION

HR. OF DAY	N	NNE	NE	ENE	E	ESE	SE	SSE	S	SSW	SW	WSW	W	WNW	NW	NNW	CALM	TOTAL
1	12.9	6.5	3.2	00.0	00.0	00.0	9.7	19.4	12.9	9.7	6.5	00.0	3.2	3.2	6.5	6.5	00.0	100.
2	19.4	3.2	3.2	00.0	00.0	6.5	9.7	16.1	12.9	9.7	6.5	00.0	3.2	3.2	3.2	3.2	00.0	100.
3	3.2	3.2	6.5	00.0	00.0	00.0	6.5	12.9	16.1	12.9	3.2	00.0	00.0	00.0	6.5	29.0	00.0	100.
4	9.7	00.0	00.0	00.0	3.2	00.0	6.5	22.6	9.7	6.5	6.5	00.0	3.2	3.2	9.7	19.4	00.0	100.
5	9.7	00.0	00.0	00.0	6.5	00.0	6.5	12.9	19.4	12.9	6.5	3.2	00.0	3.2	3.2	16.1	00.0	100.
6	19.4	3.2	00.0	00.0	00.0	3.2	6.5	9.7	25.8	6.5	6.5	00.0	00.0	3.2	6.5	9.7	00.0	100.
7	9.7	00.0	3.2	3.2	00.0	3.2	3.2	9.7	16.1	9.7	3.2	3.2	3.2	00.0	9.7	22.6	00.0	100.
8	22.6	3.2	00.0	00.0	3.2	3.2	6.5	9.7	22.6	00.0	6.5	00.0	00.0	00.0	6.5	16.1	00.0	100.
9	25.8	3.2	6.5	3.2	3.2	00.0	12.9	9.7	22.6	00.0	3.2	00.0	00.0	00.0	00.0	9.7	00.0	100.
10	19.4	3.2	9.7	3.2	6.5	3.2	3.2	3.2	29.0	6.5	3.2	00.0	00.0	3.2	00.0	6.5	00.0	100.
11	25.8	3.2	00.0	6.5	6.5	00.0	6.5	9.7	19.4	12.9	3.2	00.0	3.2	00.0	00.0	3.2	00.0	100.
12	19.4	3.2	00.0	3.2	3.2	3.2	6.5	9.7	12.9	19.4	00.0	6.5	00.0	00.0	00.0	12.9	00.0	100.
13	22.6	3.2	6.5	3.2	00.0	6.5	3.2	9.7	12.9	16.1	00.0	00.0	00.0	6.5	3.2	6.5	00.0	100.
14	16.1	6.5	3.2	6.5	6.5	00.0	9.7	9.7	9.7	16.1	00.0	00.0	00.0	6.5	00.0	9.7	00.0	100.
15	16.1	9.7	6.5	00.0	3.2	16.1	3.2	3.2	16.1	9.7	3.2	00.0	00.0	00.0	6.5	6.5	00.0	100.
16	19.4	9.7	3.2	3.2	3.2	6.5	16.1	6.5	9.7	12.9	00.0	00.0	00.0	3.2	3.2	3.2	00.0	100.
17	16.1	9.7	3.2	3.2	00.0	6.5	6.5	12.9	9.7	12.9	00.0	3.2	00.0	00.0	3.2	12.9	00.0	100.
18	29.0	3.2	6.5	00.0	00.0	6.5	9.7	12.9	9.7	12.9	00.0	00.0	00.0	00.0	6.5	3.2	00.0	100.
19	12.9	00.0	9.7	3.2	00.0	00.0	9.7	16.1	12.9	12.9	3.2	00.0	00.0	00.0	00.0	19.4	00.0	100.
20	3.2	6.5	12.9	3.2	00.0	00.0	3.2	3.2	25.8	9.7	3.2	3.2	00.0	3.2	6.5	16.1	00.0	100.
21	12.9	3.2	3.2	00.0	00.0	00.0	3.2	00.0	22.6	6.5	3.2	6.5	00.0	6.5	12.9	19.4	00.0	100.
22	9.7	9.7	3.2	00.0	00.0	00.0	3.2	12.9	16.1	9.7	3.2	00.0	6.5	00.0	16.1	6.5	3.2	100.
23	6.5	9.7	3.2	3.2	00.0	00.0	3.2	9.7	22.6	9.7	00.0	3.2	3.2	6.5	9.7	6.5	3.2	100.
24	12.9	6.5	3.2	00.0	00.0	3.2	3.2	12.9	29.0	6.5	3.2	6.5	00.0	00.0	6.5	6.5	00.0	100.
ALL	15.6	4.6	4.0	1.9	1.9	2.8	6.6	10.6	17.3	10.1	3.1	1.5	1.1	2.2	5.2	11.3	.3	100.

NUMBER OF OBS = 744

NPPD-COOPER NUCLEAR STATION 10-M WIND DIRECTION 2012

PROGRAM: WINPER
VERSION: PC-1.0

HOURLY WIND ROSES (PERCENT)

SEPTEMBR

WIND DIRECTION

HR. OF DAY	N	NNE	NE	ENE	E	ESE	SE	SSE	S	SSW	SW	WSW	W	WNW	NW	NNW	CALM	TOTAL
1	26.7	3.3	00.0	00.0	00.0	00.0	10.0	23.3	20.0	00.0	00.0	00.0	00.0	00.0	6.7	10.0	00.0	100.
2	23.3	3.3	00.0	00.0	00.0	3.3	3.3	6.7	26.7	10.0	00.0	3.3	00.0	00.0	6.7	13.3	00.0	100.
3	16.7	6.7	00.0	00.0	3.3	00.0	00.0	6.7	30.0	13.3	3.3	00.0	3.3	6.7	3.3	6.7	00.0	100.
4	23.3	6.7	00.0	00.0	3.3	00.0	3.3	16.7	16.7	10.0	6.7	00.0	00.0	00.0	3.3	3.3	6.7	100.
5	16.7	6.7	00.0	3.3	00.0	00.0	00.0	10.0	26.7	6.7	3.3	3.3	3.3	6.7	3.3	10.0	00.0	100.
6	23.3	00.0	00.0	00.0	00.0	00.0	10.0	3.3	30.0	6.7	6.7	6.7	3.3	3.3	6.7	00.0	00.0	100.
7	20.0	00.0	00.0	00.0	3.3	00.0	00.0	20.0	20.0	3.3	00.0	6.7	3.3	6.7	3.3	13.3	00.0	100.
8	16.7	3.3	00.0	00.0	3.3	00.0	13.3	20.0	26.7	00.0	00.0	3.3	00.0	00.0	6.7	6.7	00.0	100.
9	16.7	3.3	6.7	6.7	00.0	3.3	20.0	3.3	16.7	6.7	00.0	00.0	00.0	3.3	6.7	6.7	00.0	100.
10	10.0	6.7	13.3	10.0	3.3	3.3	10.0	10.0	10.0	3.3	00.0	00.0	00.0	6.7	6.7	6.7	00.0	100.
11	13.3	10.0	10.0	6.7	00.0	6.7	10.0	3.3	6.7	13.3	00.0	00.0	00.0	3.3	3.3	13.3	00.0	100.
12	20.0	10.0	6.7	10.0	00.0	00.0	10.0	10.0	13.3	3.3	3.3	00.0	3.3	3.3	3.3	3.3	00.0	100.
13	26.7	3.3	3.3	6.7	00.0	10.0	6.7	3.3	10.0	6.7	3.3	00.0	00.0	3.3	3.3	13.3	00.0	100.
14	6.7	10.0	3.3	6.7	6.7	3.3	16.7	3.3	6.7	3.3	3.3	3.3	00.0	00.0	10.0	16.7	00.0	100.
15	10.0	10.0	3.3	00.0	6.7	6.7	16.7	3.3	16.7	3.3	00.0	00.0	00.0	6.7	00.0	16.7	00.0	100.
16	6.7	6.7	6.7	6.7	3.3	6.7	10.0	16.7	6.7	6.7	00.0	00.0	3.3	6.7	3.3	10.0	00.0	100.
17	13.3	6.7	00.0	10.0	00.0	3.3	10.0	10.0	16.7	00.0	6.7	00.0	00.0	00.0	10.0	13.3	00.0	100.
18	10.0	3.3	6.7	00.0	6.7	00.0	13.3	13.3	10.0	6.7	00.0	3.3	00.0	3.3	3.3	20.0	00.0	100.
19	6.7	6.7	00.0	3.3	3.3	3.3	10.0	23.3	3.3	00.0	3.3	00.0	3.3	00.0	16.7	16.7	00.0	100.
20	13.3	10.0	00.0	6.7	00.0	00.0	3.3	10.0	23.3	6.7	3.3	00.0	3.3	00.0	10.0	10.0	00.0	100.
21	10.0	10.0	3.3	00.0	00.0	00.0	00.0	20.0	23.3	3.3	00.0	3.3	00.0	3.3	13.3	6.7	3.3	100.
22	13.3	3.3	00.0	3.3	00.0	3.3	3.3	20.0	26.7	00.0	00.0	3.3	3.3	10.0	6.7	00.0	3.3	100.
23	13.3	00.0	13.3	00.0	3.3	3.3	00.0	26.7	20.0	6.7	3.3	00.0	00.0	00.0	6.7	3.3	00.0	100.
24	10.0	10.0	00.0	3.3	00.0	00.0	6.7	20.0	20.0	3.3	00.0	00.0	3.3	10.0	3.3	10.0	00.0	100.
ALL	15.3	5.8	3.2	3.5	1.9	2.4	7.8	12.6	17.8	5.1	1.9	1.5	1.4	3.5	6.1	9.6	.6	100.

NUMBER OF OBS = 720

NPPD-COOPER NUCLEAR STATION 10-M WIND DIRECTION 2012

PROGRAM: WINPER
VERSION: PC-1.0

HOURLY WIND ROSES (PERCENT)

JUL-SEP

WIND DIRECTION

HR. OF DAY	N	NNE	NE	ENE	E	ESE	SE	SSE	S	SSW	SW	WSW	W	WNW	NW	NNW	CALM	TOTAL
1	18.5	4.3	1.1	00.0	00.0	00.0	6.5	18.5	17.4	10.9	4.3	00.0	2.2	1.1	5.4	9.8	00.0	100.
2	19.6	2.2	2.2	00.0	1.1	3.3	4.3	10.9	22.8	13.0	3.3	2.2	1.1	1.1	5.4	7.6	00.0	100.
3	10.9	4.3	3.3	00.0	1.1	1.1	2.2	9.8	23.9	15.2	4.3	00.0	1.1	3.3	5.4	14.1	00.0	100.
4	15.2	3.3	1.1	00.0	2.2	00.0	3.3	18.5	15.2	13.0	4.3	2.2	1.1	2.2	7.6	8.7	2.2	100.
5	10.9	3.3	00.0	2.2	2.2	1.1	3.3	8.7	30.4	7.6	6.5	2.2	2.2	6.5	3.3	9.8	00.0	100.
6	19.6	1.1	00.0	2.2	1.1	1.1	6.5	7.6	30.4	6.5	4.3	4.3	2.2	3.3	5.4	4.3	00.0	100.
7	14.1	1.1	2.2	1.1	1.1	4.3	2.2	13.0	27.2	4.3	1.1	3.3	2.2	2.2	6.5	14.1	00.0	100.
8	16.3	5.4	1.1	00.0	2.2	3.3	9.8	16.3	23.9	5.4	2.2	1.1	00.0	00.0	5.4	7.6	00.0	100.
9	18.5	5.4	5.4	4.3	1.1	1.1	15.2	5.4	20.7	10.9	3.3	00.0	00.0	1.1	2.2	5.4	00.0	100.
10	13.0	4.3	13.0	4.3	3.3	3.3	6.5	4.3	20.7	14.1	2.2	1.1	00.0	3.3	2.2	4.3	00.0	100.
11	15.2	6.5	5.4	6.5	2.2	4.3	6.5	7.6	12.0	20.7	4.3	00.0	1.1	1.1	1.1	5.4	00.0	100.
12	16.3	4.3	6.5	5.4	2.2	3.3	6.5	9.8	15.2	15.2	2.2	2.2	1.1	1.1	1.1	7.6	00.0	100.
13	22.8	2.2	5.4	4.3	1.1	7.6	7.6	5.4	18.5	10.9	2.2	00.0	00.0	3.3	2.2	6.5	00.0	100.
14	13.0	6.5	4.3	4.3	5.4	5.4	10.9	7.6	14.1	9.8	2.2	1.1	00.0	2.2	3.3	9.8	00.0	100.
15	12.0	8.7	4.3	1.1	4.3	9.8	8.7	6.5	19.6	8.7	1.1	1.1	00.0	2.2	3.3	8.7	00.0	100.
16	12.0	6.5	5.4	4.3	4.3	7.6	12.0	9.8	12.0	12.0	2.2	00.0	1.1	3.3	2.2	5.4	00.0	100.
17	14.1	8.7	2.2	4.3	00.0	4.3	14.1	10.9	14.1	9.8	2.2	2.2	00.0	00.0	4.3	8.7	00.0	100.
18	16.3	7.6	4.3	00.0	2.2	3.3	15.2	16.3	10.9	7.6	1.1	2.2	1.1	1.1	3.3	7.6	00.0	100.
19	9.8	3.3	7.6	2.2	1.1	2.2	14.1	20.7	9.8	5.4	3.3	00.0	3.3	00.0	5.4	12.0	00.0	100.
20	10.9	7.6	6.5	4.3	1.1	00.0	8.7	10.9	20.7	7.6	3.3	1.1	1.1	1.1	6.5	8.7	00.0	100.
21	14.1	7.6	3.3	00.0	1.1	00.0	4.3	8.7	23.9	4.3	3.3	4.3	00.0	3.3	10.9	9.8	1.1	100.
22	16.3	5.4	1.1	1.1	00.0	1.1	4.3	14.1	18.5	10.9	3.3	2.2	4.3	3.3	9.8	2.2	2.2	100.
23	9.8	4.3	5.4	1.1	1.1	1.1	3.3	14.1	22.8	8.7	1.1	3.3	5.4	2.2	7.6	7.6	1.1	100.
24	15.2	6.5	1.1	1.1	00.0	2.2	3.3	10.9	27.2	7.6	2.2	2.2	1.1	5.4	3.3	10.9	00.0	100.
ALL	14.8	5.0	3.8	2.3	1.7	2.9	7.5	11.1	19.7	10.0	2.9	1.6	1.3	2.2	4.7	8.2	.3	100.

NUMBER OF OBS = 2208

NPPD-COOPER NUCLEAR STATION 10-M WIND DIRECTION 2012

PROGRAM: WINPER
VERSION: PC-1.0

HOURLY WIND ROSES (PERCENT)

OCTOBER

WIND DIRECTION

HR. OF DAY	N	NNE	NE	ENE	E	ESE	SE	SSE	S	SSW	SW	WSW	W	WNW	NW	NNW	CALM	TOTAL
1	12.9	3.2	3.2	00.0	3.2	3.2	12.9	3.2	12.9	12.9	6.5	00.0	6.5	3.2	6.5	6.5	3.2	100.
2	6.5	00.0	3.2	00.0	00.0	3.2	9.7	16.1	16.1	9.7	00.0	00.0	9.7	9.7	6.5	9.7	00.0	100.
3	3.2	3.2	3.2	00.0	00.0	3.2	6.5	19.4	12.9	12.9	3.2	6.5	6.5	6.5	6.5	6.5	00.0	100.
4	3.2	00.0	3.2	00.0	6.5	00.0	9.7	9.7	3.2	16.1	6.5	00.0	6.5	9.7	12.9	9.7	3.2	100.
5	3.2	00.0	3.2	00.0	3.2	00.0	12.9	6.5	19.4	12.9	3.2	00.0	3.2	3.2	12.9	16.1	00.0	100.
6	3.2	6.5	3.2	00.0	3.2	00.0	9.7	9.7	12.9	9.7	9.7	6.5	00.0	00.0	6.5	19.4	00.0	100.
7	3.2	00.0	3.2	00.0	00.0	3.2	9.7	12.9	19.4	9.7	00.0	3.2	6.5	3.2	12.9	12.9	00.0	100.
8	3.2	3.2	00.0	3.2	3.2	3.2	6.5	16.1	6.5	6.5	3.2	9.7	3.2	00.0	16.1	12.9	3.2	100.
9	3.2	00.0	00.0	00.0	3.2	3.2	12.9	16.1	12.9	6.5	6.5	3.2	3.2	00.0	19.4	9.7	00.0	100.
10	6.5	00.0	00.0	00.0	6.5	3.2	9.7	9.7	19.4	3.2	00.0	9.7	6.5	00.0	16.1	9.7	00.0	100.
11	00.0	00.0	3.2	00.0	00.0	6.5	6.5	12.9	12.9	9.7	3.2	6.5	3.2	12.9	9.7	12.9	00.0	100.
12	9.7	00.0	00.0	00.0	3.2	3.2	9.7	9.7	12.9	3.2	3.2	16.1	00.0	6.5	12.9	9.7	00.0	100.
13	6.5	3.2	00.0	00.0	3.2	6.5	6.5	9.7	12.9	3.2	3.2	12.9	6.5	00.0	12.9	12.9	00.0	100.
14	9.7	00.0	00.0	00.0	3.2	3.2	9.7	3.2	16.1	9.7	6.5	6.5	00.0	3.2	9.7	19.4	00.0	100.
15	6.5	00.0	3.2	00.0	00.0	6.5	12.9	6.5	9.7	9.7	9.7	3.2	00.0	3.2	9.7	19.4	00.0	100.
16	6.5	00.0	3.2	3.2	00.0	00.0	9.7	12.9	6.5	12.9	6.5	3.2	3.2	00.0	9.7	22.6	00.0	100.
17	9.7	00.0	00.0	3.2	3.2	00.0	12.9	9.7	3.2	12.9	6.5	00.0	6.5	3.2	16.1	12.9	00.0	100.
18	3.2	3.2	00.0	00.0	00.0	00.0	16.1	9.7	3.2	12.9	9.7	00.0	00.0	3.2	19.4	19.4	00.0	100.
19	00.0	3.2	00.0	00.0	00.0	3.2	19.4	3.2	9.7	6.5	3.2	00.0	3.2	12.9	16.1	19.4	00.0	100.
20	3.2	3.2	00.0	00.0	00.0	9.7	12.9	3.2	16.1	6.5	3.2	3.2	3.2	6.5	9.7	19.4	00.0	100.
21	6.5	3.2	00.0	00.0	3.2	00.0	16.1	9.7	12.9	9.7	3.2	00.0	00.0	6.5	9.7	16.1	3.2	100.
22	00.0	9.7	00.0	00.0	00.0	3.2	12.9	3.2	12.9	12.9	00.0	3.2	3.2	6.5	6.5	22.6	3.2	100.
23	3.2	3.2	00.0	00.0	00.0	3.2	9.7	16.1	12.9	9.7	3.2	00.0	6.5	6.5	6.5	16.1	3.2	100.
24	19.4	3.2	00.0	00.0	00.0	6.5	9.7	12.9	16.1	9.7	3.2	00.0	3.2	3.2	3.2	3.2	6.5	100.
ALL	5.5	2.0	1.3	.4	1.9	3.1	11.0	10.1	12.2	9.5	4.3	3.9	3.8	4.6	11.2	14.1	1.1	100.

NUMBER OF OBS = 744

NPPD-COOPER NUCLEAR STATION 10-M WIND DIRECTION 2012

PROGRAM: WINPER
VERSION: PC-1.0

HOURLY WIND ROSES (PERCENT)

NOVEMBER

WIND DIRECTION

HR. OF DAY	N	NNE	NE	ENE	E	ESE	SE	SSE	S	SSW	SW	WSW	W	WNW	NW	NNW	CALM	TOTAL
1	10.0	00.0	3.3	00.0	00.0	3.3	00.0	20.0	26.7	10.0	3.3	6.7	00.0	10.0	3.3	00.0	3.3	100.
2	10.0	00.0	00.0	3.3	3.3	00.0	6.7	20.0	30.0	3.3	00.0	00.0	6.7	00.0	13.3	3.3	00.0	100.
3	10.0	00.0	00.0	00.0	3.3	3.3	00.0	20.0	20.0	00.0	3.3	10.0	3.3	6.7	10.0	3.3	6.7	100.
4	13.3	00.0	00.0	00.0	00.0	3.3	00.0	20.0	20.0	3.3	3.3	6.7	3.3	6.7	13.3	3.3	3.3	100.
5	3.3	3.3	00.0	00.0	00.0	3.3	6.7	6.7	26.7	13.3	00.0	6.7	00.0	6.7	6.7	13.3	3.3	100.
6	6.7	3.3	00.0	00.0	3.3	00.0	6.7	16.7	16.7	10.0	00.0	3.3	6.7	3.3	3.3	13.3	6.7	100.
7	10.0	3.3	00.0	00.0	3.3	3.3	6.7	10.0	23.3	6.7	6.7	00.0	3.3	00.0	3.3	16.7	3.3	100.
8	3.3	3.3	00.0	00.0	00.0	3.3	00.0	16.7	30.0	00.0	00.0	6.7	00.0	6.7	6.7	13.3	10.0	100.
9	6.7	3.3	00.0	00.0	00.0	3.3	10.0	20.0	20.0	3.3	00.0	3.3	00.0	3.3	13.3	13.3	00.0	100.
10	13.3	00.0	00.0	00.0	00.0	3.3	10.0	20.0	26.7	00.0	00.0	00.0	6.7	00.0	6.7	13.3	00.0	100.
11	10.0	10.0	00.0	00.0	00.0	3.3	6.7	16.7	16.7	10.0	6.7	00.0	3.3	00.0	13.3	3.3	00.0	100.
12	16.7	6.7	00.0	00.0	00.0	6.7	10.0	6.7	20.0	6.7	3.3	00.0	3.3	3.3	16.7	00.0	00.0	100.
13	6.7	3.3	3.3	6.7	3.3	6.7	3.3	10.0	20.0	10.0	00.0	00.0	00.0	6.7	13.3	6.7	00.0	100.
14	16.7	00.0	00.0	00.0	3.3	6.7	13.3	6.7	23.3	6.7	00.0	3.3	00.0	3.3	10.0	6.7	00.0	100.
15	20.0	00.0	00.0	00.0	6.7	6.7	00.0	26.7	13.3	6.7	00.0	3.3	00.0	3.3	10.0	3.3	00.0	100.
16	10.0	6.7	00.0	00.0	3.3	3.3	6.7	23.3	13.3	6.7	3.3	00.0	3.3	3.3	10.0	6.7	00.0	100.
17	10.0	3.3	00.0	3.3	3.3	00.0	6.7	20.0	20.0	6.7	00.0	00.0	3.3	3.3	13.3	6.7	00.0	100.
18	13.3	00.0	3.3	00.0	00.0	00.0	6.7	13.3	30.0	3.3	00.0	00.0	3.3	6.7	13.3	6.7	00.0	100.
19	13.3	3.3	00.0	00.0	3.3	3.3	6.7	6.7	30.0	3.3	00.0	3.3	3.3	00.0	16.7	6.7	00.0	100.
20	16.7	6.7	00.0	00.0	00.0	3.3	10.0	10.0	26.7	00.0	00.0	00.0	00.0	10.0	6.7	10.0	00.0	100.
21	20.0	00.0	00.0	3.3	00.0	00.0	00.0	10.0	23.3	6.7	6.7	3.3	3.3	6.7	10.0	00.0	6.7	100.
22	10.0	00.0	00.0	00.0	00.0	00.0	3.3	13.3	33.3	3.3	6.7	3.3	00.0	10.0	6.7	6.7	3.3	100.
23	6.7	3.3	00.0	00.0	00.0	00.0	3.3	13.3	33.3	6.7	00.0	6.7	3.3	13.3	6.7	3.3	00.0	100.
24	6.7	6.7	00.0	00.0	00.0	00.0	3.3	13.3	23.3	3.3	10.0	00.0	00.0	16.7	10.0	00.0	6.7	100.
ALL	11.0	2.8	.4	.7	1.5	2.8	5.3	15.0	23.6	5.4	2.2	2.8	2.4	5.4	9.9	6.7	2.2	100.

NUMBER OF OBS = 720

NPPD-COOPER NUCLEAR STATION 10-M WIND DIRECTION 2012

PROGRAM: WINPER
VERSION: PC-1.0

HOURLY WIND ROSES (PERCENT)

DECEMBER

WIND DIRECTION

HR. OF DAY	N	NNE	NE	ENE	E	ESE	SE	SSE	S	SSW	SW	WSW	W	WNW	NW	NNW	CALM	TOTAL
1	16.1	3.2	00.0	00.0	00.0	3.2	9.7	3.2	22.6	00.0	00.0	3.2	00.0	9.7	12.9	12.9	3.2	100.
2	6.5	6.5	00.0	00.0	00.0	00.0	12.9	9.7	12.9	3.2	6.5	00.0	00.0	3.2	22.6	12.9	3.2	100.
3	22.6	00.0	3.2	6.5	3.2	3.2	00.0	9.7	12.9	00.0	3.2	00.0	3.2	3.2	6.5	19.4	3.2	100.
4	19.4	00.0	00.0	3.2	6.5	00.0	00.0	12.9	22.6	00.0	6.5	00.0	00.0	00.0	6.5	19.4	3.2	100.
5	22.6	00.0	00.0	3.2	3.2	6.5	00.0	9.7	19.4	3.2	3.2	3.2	00.0	00.0	6.5	19.4	00.0	100.
6	25.8	00.0	00.0	3.2	3.2	3.2	6.5	6.5	16.1	9.7	3.2	00.0	6.5	3.2	6.5	6.5	00.0	100.
7	22.6	00.0	00.0	00.0	3.2	9.7	3.2	6.5	12.9	9.7	6.5	00.0	3.2	3.2	6.5	12.9	00.0	100.
8	19.4	00.0	3.2	3.2	3.2	00.0	00.0	6.5	19.4	9.7	6.5	00.0	00.0	9.7	9.7	3.2	6.5	100.
9	16.1	00.0	3.2	00.0	3.2	3.2	6.5	3.2	22.6	3.2	00.0	6.5	6.5	6.5	6.5	9.7	3.2	100.
10	9.7	3.2	9.7	3.2	00.0	3.2	6.5	3.2	12.9	12.9	00.0	9.7	00.0	9.7	6.5	9.7	00.0	100.
11	3.3	6.7	3.3	6.7	00.0	6.7	3.3	3.3	13.3	6.7	6.7	6.7	3.3	6.7	13.3	10.0	00.0	100.
12	13.3	6.7	3.3	3.3	3.3	6.7	6.7	00.0	20.0	3.3	3.3	6.7	3.3	6.7	13.3	00.0	00.0	100.
13	13.3	3.3	00.0	3.3	00.0	10.0	00.0	6.7	6.7	16.7	00.0	6.7	6.7	13.3	10.0	3.3	00.0	100.
14	12.9	3.2	00.0	3.2	00.0	9.7	00.0	3.2	12.9	6.5	6.5	6.5	9.7	12.9	3.2	9.7	00.0	100.
15	3.2	6.5	3.2	3.2	00.0	9.7	3.2	3.2	12.9	3.2	3.2	9.7	6.5	9.7	9.7	12.9	00.0	100.
16	9.7	3.2	00.0	3.2	00.0	9.7	3.2	3.2	16.1	6.5	00.0	3.2	6.5	9.7	9.7	16.1	00.0	100.
17	19.4	3.2	00.0	3.2	3.2	9.7	00.0	6.5	6.5	9.7	00.0	9.7	3.2	3.2	16.1	6.5	00.0	100.
18	16.1	6.5	3.2	3.2	3.2	3.2	3.2	9.7	00.0	9.7	6.5	00.0	3.2	3.2	19.4	9.7	00.0	100.
19	12.9	12.9	00.0	3.2	00.0	3.2	3.2	9.7	6.5	9.7	00.0	6.5	00.0	6.5	12.9	12.9	00.0	100.
20	9.7	16.1	3.2	00.0	00.0	3.2	6.5	6.5	6.5	3.2	9.7	00.0	00.0	9.7	9.7	16.1	00.0	100.
21	9.7	12.9	3.2	3.2	00.0	3.2	00.0	6.5	12.9	9.7	00.0	00.0	3.2	6.5	16.1	12.9	00.0	100.
22	16.1	6.5	3.2	00.0	3.2	00.0	6.5	6.5	12.9	3.2	9.7	00.0	3.2	6.5	12.9	9.7	00.0	100.
23	12.9	3.2	6.5	00.0	00.0	3.2	9.7	12.9	9.7	3.2	00.0	3.2	3.2	3.2	16.1	12.9	00.0	100.
24	16.1	3.2	3.2	00.0	00.0	3.2	6.5	3.2	16.1	6.5	00.0	3.2	00.0	9.7	9.7	16.1	3.2	100.
ALL	14.6	4.5	2.2	2.4	1.6	4.7	4.0	6.3	13.6	6.2	3.4	3.5	3.0	6.5	10.9	11.5	1.1	100.

NUMBER OF OBS = 741

NPPD-COOPER NUCLEAR STATION 10-M WIND DIRECTION 2012

PROGRAM: WINPER
VERSION: PC-1.0

HOURLY WIND ROSES (PERCENT)

OCT-DEC

WIND DIRECTION

HR. OF DAY	N	NNE	NE	ENE	E	ESE	SE	SSE	S	SSW	SW	WSW	W	WNW	NW	NNW	CALM	TOTAL
1	13.0	2.2	2.2	00.0	1.1	3.3	7.6	8.7	20.7	7.6	3.3	3.3	2.2	7.6	7.6	6.5	3.3	100.
2	7.6	2.2	1.1	1.1	1.1	1.1	9.8	15.2	19.6	5.4	2.2	00.0	5.4	4.3	14.1	8.7	1.1	100.
3	12.0	1.1	2.2	2.2	2.2	3.3	2.2	16.3	15.2	4.3	3.3	5.4	4.3	5.4	7.6	9.8	3.3	100.
4	12.0	00.0	1.1	1.1	4.3	1.1	3.3	14.1	15.2	6.5	5.4	2.2	3.3	5.4	10.9	10.9	3.3	100.
5	9.8	1.1	1.1	1.1	2.2	3.3	6.5	7.6	21.7	9.8	2.2	3.3	1.1	3.3	8.7	16.3	1.1	100.
6	12.0	3.3	1.1	1.1	3.3	1.1	7.6	10.9	15.2	9.8	4.3	3.3	4.3	2.2	5.4	13.0	2.2	100.
7	12.0	1.1	1.1	00.0	2.2	5.4	6.5	9.8	18.5	8.7	4.3	1.1	4.3	2.2	7.6	14.1	1.1	100.
8	8.7	2.2	1.1	2.2	2.2	2.2	2.2	13.0	18.5	5.4	3.3	5.4	1.1	5.4	10.9	9.8	6.5	100.
9	8.7	1.1	1.1	00.0	2.2	3.3	9.8	13.0	18.5	4.3	2.2	4.3	3.3	3.3	13.0	10.9	1.1	100.
10	9.8	1.1	3.3	1.1	2.2	3.3	8.7	10.9	19.6	5.4	00.0	6.5	4.3	3.3	9.8	10.9	00.0	100.
11	4.4	5.5	2.2	2.2	00.0	5.5	5.5	11.0	14.3	8.8	5.5	4.4	3.3	6.6	12.1	8.8	00.0	100.
12	13.2	4.4	1.1	1.1	2.2	5.5	8.8	5.5	17.6	4.4	3.3	7.7	2.2	5.5	14.3	3.3	00.0	100.
13	8.8	3.3	1.1	3.3	2.2	7.7	3.3	8.8	13.2	9.9	1.1	6.6	4.4	6.6	12.1	7.7	00.0	100.
14	13.0	1.1	00.0	1.1	2.2	6.5	7.6	4.3	17.4	7.6	4.3	5.4	3.3	6.5	7.6	12.0	00.0	100.
15	9.8	2.2	2.2	1.1	2.2	7.6	5.4	12.0	12.0	6.5	4.3	5.4	2.2	5.4	9.8	12.0	00.0	100.
16	8.7	3.3	1.1	2.2	1.1	4.3	6.5	13.0	12.0	8.7	3.3	2.2	4.3	4.3	9.8	15.2	00.0	100.
17	13.0	2.2	00.0	3.3	3.3	3.3	6.5	12.0	9.8	9.8	2.2	3.3	4.3	3.3	15.2	8.7	00.0	100.
18	10.9	3.3	2.2	1.1	1.1	1.1	8.7	10.9	10.9	8.7	5.4	00.0	2.2	4.3	17.4	12.0	00.0	100.
19	8.7	6.5	00.0	1.1	1.1	3.3	9.8	6.5	15.2	6.5	1.1	3.3	2.2	6.5	15.2	13.0	00.0	100.
20	9.8	8.7	1.1	00.0	00.0	5.4	9.8	6.5	16.3	3.3	4.3	1.1	1.1	8.7	8.7	15.2	00.0	100.
21	12.0	5.4	1.1	2.2	1.1	1.1	5.4	8.7	16.3	8.7	3.3	1.1	2.2	6.5	12.0	9.8	3.3	100.
22	8.7	5.4	1.1	00.0	1.1	1.1	7.6	7.6	19.6	6.5	5.4	2.2	2.2	7.6	8.7	13.0	2.2	100.
23	7.6	3.3	2.2	00.0	00.0	2.2	7.6	14.1	18.5	6.5	1.1	3.3	4.3	7.6	9.8	10.9	1.1	100.
24	14.1	4.3	1.1	00.0	00.0	3.3	6.5	9.8	18.5	6.5	4.3	1.1	1.1	9.8	7.6	6.5	5.4	100.
ALL	10.3	3.1	1.3	1.2	1.7	3.5	6.8	10.4	16.4	7.1	3.3	3.4	3.0	5.5	10.7	10.8	1.5	100.

NUMBER OF OBS = 2205

NPPD-COOPER NUCLEAR STATION 10-M WIND DIRECTION 2012

PROGRAM: WINPER
VERSION: PC-1.0

HOURLY WIND ROSES (PERCENT)

JUL-DEC

WIND DIRECTION

HR. OF DAY	N	NNE	NE	ENE	E	ESE	SE	SSE	S	SSW	SW	WSW	W	WNW	NW	NNW	CALM	TOTAL
1	15.8	3.3	1.6	00.0	.5	1.6	7.1	13.6	19.0	9.2	3.8	1.6	2.2	4.3	6.5	8.2	1.6	100.
2	13.6	2.2	1.6	.5	1.1	2.2	7.1	13.0	21.2	9.2	2.7	1.1	3.3	2.7	9.8	8.2	.5	100.
3	11.4	2.7	2.7	1.1	1.6	2.2	2.2	13.0	19.6	9.8	3.8	2.7	2.7	4.3	6.5	12.0	1.6	100.
4	13.6	1.6	1.1	.5	3.3	.5	3.3	16.3	15.2	9.8	4.9	2.2	2.2	3.8	9.2	9.8	2.7	100.
5	10.3	2.2	.5	1.6	2.2	2.2	4.9	8.2	26.1	8.7	4.3	2.7	1.6	4.9	6.0	13.0	.5	100.
6	15.8	2.2	.5	1.6	2.2	1.1	7.1	9.2	22.8	8.2	4.3	3.8	3.3	2.7	5.4	8.7	1.1	100.
7	13.0	1.1	1.6	.5	1.6	4.9	4.3	11.4	22.8	6.5	2.7	2.2	3.3	2.2	7.1	14.1	.5	100.
8	12.5	3.8	1.1	1.1	2.2	2.7	6.0	14.7	21.2	5.4	2.7	3.3	.5	2.7	8.2	8.7	3.3	100.
9	13.6	3.3	3.3	2.2	1.6	2.2	12.5	9.2	19.6	7.6	2.7	2.2	1.6	2.2	7.6	8.2	.5	100.
10	11.4	2.7	8.2	2.7	2.7	3.3	7.6	7.6	20.1	9.8	1.1	3.8	2.2	3.3	6.0	7.6	00.0	100.
11	9.8	6.0	3.8	4.4	1.1	4.9	6.0	9.3	13.1	14.8	4.9	2.2	2.2	3.8	6.6	7.1	00.0	100.
12	14.8	4.4	3.8	3.3	2.2	4.4	7.7	7.7	16.4	9.8	2.7	4.9	1.6	3.3	7.7	5.5	00.0	100.
13	15.8	2.7	3.3	3.8	1.6	7.7	5.5	7.1	15.8	10.4	1.6	3.3	2.2	4.9	7.1	7.1	00.0	100.
14	13.0	3.8	2.2	2.7	3.8	6.0	9.2	6.0	15.8	8.7	3.3	3.3	1.6	4.3	5.4	10.9	00.0	100.
15	10.9	5.4	3.3	1.1	3.3	8.7	7.1	9.2	15.8	7.6	2.7	3.3	1.1	3.8	6.5	10.3	00.0	100.
16	10.3	4.9	3.3	3.3	2.7	6.0	9.2	11.4	12.0	10.3	2.7	1.1	2.7	3.8	6.0	10.3	00.0	100.
17	13.6	5.4	1.1	3.8	1.6	3.8	10.3	11.4	12.0	9.8	2.2	2.7	2.2	1.6	9.8	8.7	00.0	100.
18	13.6	5.4	3.3	.5	1.6	2.2	12.0	13.6	10.9	8.2	3.3	1.1	1.6	2.7	10.3	9.8	00.0	100.
19	9.2	4.9	3.8	1.6	1.1	2.7	12.0	13.6	12.5	6.0	2.2	1.6	2.7	3.3	10.3	12.5	00.0	100.
20	10.3	8.2	3.8	2.2	.5	2.7	9.2	8.7	18.5	5.4	3.8	1.1	1.1	4.9	7.6	12.0	00.0	100.
21	13.0	6.5	2.2	1.1	1.1	.5	4.9	8.7	20.1	6.5	3.3	2.7	1.1	4.9	11.4	9.8	2.2	100.
22	12.5	5.4	1.1	.5	.5	1.1	6.0	10.9	19.0	8.7	4.3	2.2	3.3	5.4	9.2	7.6	2.2	100.
23	8.7	3.8	3.8	.5	.5	1.6	5.4	14.1	20.7	7.6	1.1	3.3	4.9	4.9	8.7	9.2	1.1	100.
24	14.7	5.4	1.1	.5	00.0	2.7	4.9	10.3	22.8	7.1	3.3	1.6	1.1	7.6	5.4	8.7	2.7	100.
ALL	12.6	4.1	2.6	1.7	1.7	3.2	7.1	10.8	18.0	8.5	3.1	2.5	2.2	3.9	7.7	9.5	.9	100.

NUMBER OF OBS = 4413

NPPD-COOPER NUCLEAR STATION 10-M WIND DIRECTION 2012

PROGRAM: WINPER
VERSION: PC-1.0

HOURLY WIND ROSES (PERCENT)

JAN-DEC

WIND DIRECTION

HR. OF DAY	N	NNE	NE	ENE	E	ESE	SE	SSE	S	SSW	SW	WSW	W	WNW	NW	NNW	CALM	TOTAL
1	12.3	3.0	1.4	.8	1.4	1.6	7.9	14.5	18.9	9.0	4.4	2.2	2.7	4.4	5.7	9.0	.8	100.
2	11.2	3.0	1.4	1.1	2.2	3.0	6.3	13.1	19.1	10.4	3.8	2.2	3.0	4.1	8.2	7.4	.5	100.
3	10.1	3.3	2.2	1.6	1.9	2.2	4.9	12.3	20.5	8.7	3.6	3.6	2.7	4.4	6.6	10.7	.8	100.
4	9.8	2.7	1.9	1.6	2.2	3.0	4.6	15.6	16.7	7.1	4.6	3.0	2.5	4.6	9.0	9.6	1.4	100.
5	9.0	2.2	1.4	1.4	2.7	2.5	5.7	11.7	20.2	10.7	4.9	2.2	2.7	4.4	7.7	10.4	.3	100.
6	13.1	2.5	.3	1.6	1.9	3.3	6.8	11.7	23.8	6.6	3.3	3.8	3.6	4.1	6.6	6.6	.5	100.
7	10.9	3.0	1.6	1.4	1.1	3.8	7.9	11.2	21.3	7.4	2.5	2.2	3.6	4.4	7.1	10.4	.3	100.
8	8.7	4.4	1.6	2.7	2.5	3.3	7.4	13.7	19.9	6.0	3.0	2.2	3.0	5.2	7.7	7.1	1.6	100.
9	10.4	3.3	2.7	2.7	2.7	3.3	12.8	7.9	18.3	8.7	3.0	1.6	2.5	4.9	7.4	7.4	.3	100.
10	7.9	4.9	5.7	3.8	2.2	4.4	8.2	8.2	17.5	10.4	2.5	3.6	1.6	4.6	6.3	8.2	00.0	100.
11	8.8	4.4	3.8	4.9	2.2	4.4	6.8	10.1	13.7	12.1	4.7	3.6	2.2	4.1	7.1	7.1	00.0	100.
12	12.1	3.6	4.1	2.5	2.5	4.4	9.0	8.2	15.1	8.8	4.9	4.1	1.9	4.4	7.7	6.8	00.0	100.
13	13.7	3.0	3.0	3.0	2.7	5.5	7.4	7.1	15.9	9.0	3.8	3.6	2.5	4.9	8.5	6.3	00.0	100.
14	11.7	4.1	2.2	2.5	3.6	4.4	9.8	6.6	16.4	7.7	3.0	4.9	3.0	4.1	6.8	9.3	00.0	100.
15	10.1	5.7	2.5	2.2	2.7	6.6	7.7	8.7	15.3	7.9	3.6	3.6	3.3	4.9	6.6	8.7	00.0	100.
16	10.1	4.4	2.7	3.8	2.5	4.9	8.5	9.0	13.4	8.2	4.6	2.5	3.8	5.5	6.3	9.8	00.0	100.
17	12.6	4.6	1.9	3.6	3.6	3.0	8.5	9.6	13.1	8.2	4.1	3.0	3.3	2.7	9.0	9.3	00.0	100.
18	10.4	5.5	2.5	1.9	3.0	2.5	9.6	10.7	12.8	7.4	4.6	1.1	2.5	3.8	9.0	12.8	00.0	100.
19	9.0	5.5	3.8	2.7	2.2	2.5	9.6	11.5	15.0	5.2	4.1	2.2	1.9	4.1	9.3	11.5	00.0	100.
20	9.6	4.9	3.8	3.3	2.7	2.5	8.5	9.6	17.5	6.3	3.6	1.4	1.9	3.3	9.3	12.0	00.0	100.
21	10.4	4.4	2.5	3.0	1.6	1.4	7.4	11.7	17.2	6.3	3.8	2.5	1.9	3.8	9.6	11.5	1.1	100.
22	13.4	4.4	1.4	1.4	1.9	2.2	8.5	10.1	17.5	8.5	3.6	2.7	2.2	3.6	9.0	8.7	1.1	100.
23	9.8	3.0	3.3	1.4	1.4	2.5	7.1	12.8	19.1	7.9	2.5	2.7	4.1	3.6	8.5	9.8	.5	100.
24	12.8	3.8	1.9	1.1	.8	3.3	6.6	10.4	21.3	7.4	4.4	2.2	2.2	5.2	5.2	10.1	1.4	100.
ALL	10.8	3.9	2.5	2.3	2.3	3.3	7.8	10.7	17.5	8.2	3.8	2.8	2.7	4.3	7.7	9.2	.4	100.

NUMBER OF OBS = 8781

Wind Direction Frequencies

100-Meter Level

NPPD-COOPER NUCLEAR STATION 100-M WIND DIRECTION 2012

PROGRAM: WINPER
VERSION: PC-1.0

HOURLY WIND ROSES (PERCENT)

JANUARY

WIND DIRECTION

HR. OF DAY	N	NNE	NE	ENE	E	ESE	SE	SSE	S	SSW	SW	WSW	W	WNW	NW	NNW	CALM	TOTAL
1	6.5	3.2	00.0	3.2	3.2	00.0	9.7	6.5	3.2	9.7	12.9	3.2	3.2	9.7	16.1	9.7	00.0	100.
2	9.7	00.0	3.2	3.2	3.2	00.0	6.5	3.2	9.7	12.9	9.7	3.2	3.2	6.5	22.6	3.2	00.0	100.
3	6.5	3.2	00.0	9.7	00.0	00.0	6.5	3.2	6.5	9.7	16.1	3.2	3.2	6.5	19.4	6.5	00.0	100.
4	3.2	3.2	00.0	6.5	00.0	6.5	00.0	9.7	9.7	3.2	16.1	6.5	3.2	6.5	19.4	6.5	00.0	100.
5	6.5	00.0	00.0	3.2	3.2	6.5	00.0	9.7	6.5	9.7	6.5	3.2	6.5	12.9	19.4	6.5	00.0	100.
6	9.7	00.0	00.0	3.2	3.2	6.5	00.0	9.7	6.5	3.2	9.7	6.5	3.2	16.1	16.1	6.5	00.0	100.
7	3.2	6.5	00.0	3.2	3.2	6.5	3.2	6.5	6.5	6.5	3.2	9.7	6.5	9.7	16.1	9.7	00.0	100.
8	00.0	6.5	3.2	6.5	00.0	6.5	3.2	6.5	6.5	00.0	12.9	6.5	3.2	6.5	22.6	9.7	00.0	100.
9	9.7	3.2	3.2	00.0	3.2	6.5	3.2	3.2	9.7	00.0	6.5	9.7	3.2	9.7	22.6	6.5	00.0	100.
10	12.9	3.2	00.0	00.0	3.2	12.9	00.0	3.2	9.7	00.0	9.7	3.2	6.5	12.9	12.9	9.7	00.0	100.
11	6.5	6.5	00.0	6.5	00.0	3.2	6.5	3.2	9.7	3.2	9.7	6.5	00.0	6.5	19.4	12.9	00.0	100.
12	9.7	00.0	3.2	00.0	00.0	9.7	6.5	00.0	12.9	6.5	9.7	3.2	00.0	3.2	32.3	3.2	00.0	100.
13	9.7	3.2	00.0	00.0	00.0	6.5	9.7	3.2	9.7	3.2	12.9	3.2	00.0	6.5	22.6	9.7	00.0	100.
14	6.5	6.5	00.0	00.0	00.0	9.7	3.2	3.2	9.7	9.7	9.7	00.0	6.5	6.5	16.1	12.9	00.0	100.
15	6.5	3.2	00.0	00.0	00.0	6.5	3.2	3.2	12.9	9.7	6.5	3.2	9.7	6.5	16.1	12.9	00.0	100.
16	9.7	3.2	00.0	00.0	00.0	3.2	3.2	3.2	3.2	6.5	16.1	9.7	3.2	12.9	16.1	9.7	00.0	100.
17	6.5	3.2	3.2	00.0	3.2	00.0	3.2	3.2	6.5	3.2	16.1	6.5	00.0	6.5	25.8	12.9	00.0	100.
18	6.5	00.0	3.2	00.0	3.2	00.0	3.2	3.2	6.5	9.7	16.1	00.0	3.2	3.2	19.4	22.6	00.0	100.
19	9.7	00.0	3.2	3.2	00.0	3.2	9.7	00.0	9.7	6.5	12.9	00.0	9.7	00.0	12.9	19.4	00.0	100.
20	3.2	6.5	6.5	00.0	00.0	6.5	3.2	6.5	3.2	9.7	12.9	6.5	6.5	00.0	12.9	16.1	00.0	100.
21	3.2	3.2	6.5	3.2	00.0	3.2	3.2	6.5	3.2	9.7	16.1	9.7	3.2	00.0	19.4	9.7	00.0	100.
22	6.5	3.2	3.2	6.5	00.0	3.2	00.0	6.5	6.5	9.7	9.7	12.9	6.5	00.0	19.4	6.5	00.0	100.
23	6.5	3.2	3.2	00.0	3.2	3.2	3.2	3.2	3.2	19.4	9.7	3.2	9.7	3.2	16.1	9.7	00.0	100.
24	6.5	3.2	3.2	00.0	3.2	3.2	3.2	6.5	6.5	9.7	12.9	3.2	9.7	3.2	16.1	9.7	00.0	100.
ALL	6.9	3.1	1.9	2.4	1.5	4.7	3.9	4.7	7.4	7.1	11.4	5.1	4.6	6.5	18.8	10.1	00.0	100.

NUMBER OF OBS = 744

NPPD-COOPER NUCLEAR STATION 100-M WIND DIRECTION 2012

PROGRAM: WINPER
VERSION: PC-1.0

HOURLY WIND ROSES (PERCENT)

FEBRUARY

WIND DIRECTION

HR. OF DAY	N	NNE	NE	ENE	E	ESE	SE	SSE	S	SSW	SW	WSW	W	WNW	NW	NNW	CALM	TOTAL
1	6.9	00.0	6.9	00.0	00.0	3.4	13.8	3.4	6.9	3.4	6.9	10.3	6.9	10.3	10.3	10.3	00.0	100.
2	00.0	3.4	3.4	3.4	00.0	6.9	6.9	6.9	3.4	6.9	6.9	00.0	13.8	6.9	17.2	13.8	00.0	100.
3	3.4	6.9	00.0	00.0	3.4	3.4	10.3	3.4	10.3	3.4	6.9	3.4	6.9	3.4	10.3	24.1	00.0	100.
4	6.9	3.4	00.0	00.0	00.0	10.3	6.9	10.3	3.4	00.0	3.4	10.3	3.4	6.9	17.2	17.2	00.0	100.
5	6.9	3.4	00.0	00.0	00.0	6.9	10.3	10.3	00.0	3.4	3.4	6.9	13.8	10.3	13.8	10.3	00.0	100.
6	10.3	3.4	00.0	00.0	3.4	3.4	13.8	3.4	3.4	3.4	6.9	6.9	13.8	6.9	13.8	6.9	00.0	100.
7	6.9	3.4	00.0	00.0	6.9	00.0	10.3	10.3	3.4	3.4	3.4	13.8	6.9	6.9	13.8	10.3	00.0	100.
8	10.3	3.4	00.0	00.0	3.4	3.4	13.8	3.4	10.3	00.0	10.3	3.4	10.3	3.4	17.2	6.9	00.0	100.
9	17.2	3.4	00.0	3.4	3.4	00.0	10.3	3.4	6.9	3.4	10.3	3.4	6.9	6.9	17.2	3.4	00.0	100.
10	6.9	6.9	3.4	3.4	3.4	00.0	3.4	10.3	3.4	13.8	3.4	6.9	6.9	10.3	6.9	10.3	00.0	100.
11	17.2	00.0	00.0	00.0	3.4	3.4	10.3	3.4	13.8	3.4	3.4	6.9	13.8	00.0	13.8	6.9	00.0	100.
12	17.2	00.0	00.0	00.0	3.4	3.4	6.9	6.9	13.8	6.9	3.4	3.4	10.3	3.4	13.8	6.9	00.0	100.
13	13.8	6.9	00.0	00.0	3.4	00.0	10.3	6.9	10.3	3.4	3.4	3.4	13.8	6.9	13.8	3.4	00.0	100.
14	20.7	00.0	3.4	00.0	3.4	00.0	10.3	6.9	6.9	6.9	3.4	3.4	10.3	6.9	17.2	00.0	00.0	100.
15	20.7	00.0	00.0	00.0	6.9	00.0	13.8	3.4	6.9	3.4	6.9	3.4	10.3	10.3	10.3	3.4	00.0	100.
16	17.2	00.0	00.0	00.0	6.9	00.0	10.3	6.9	6.9	3.4	6.9	3.4	13.8	10.3	3.4	10.3	00.0	100.
17	10.3	3.4	00.0	00.0	6.9	3.4	3.4	10.3	6.9	3.4	3.4	13.8	6.9	6.9	6.9	13.8	00.0	100.
18	6.9	3.4	00.0	00.0	6.9	3.4	6.9	6.9	6.9	3.4	6.9	6.9	6.9	6.9	6.9	20.7	00.0	100.
19	13.8	10.3	00.0	3.4	3.4	3.4	6.9	6.9	10.3	6.9	00.0	10.3	3.4	6.9	10.3	3.4	00.0	100.
20	10.3	6.9	3.4	3.4	3.4	6.9	13.8	00.0	6.9	10.3	6.9	3.4	00.0	00.0	20.7	3.4	00.0	100.
21	6.9	6.9	3.4	00.0	3.4	10.3	10.3	3.4	10.3	10.3	00.0	3.4	3.4	3.4	6.9	17.2	00.0	100.
22	13.8	00.0	6.9	00.0	3.4	3.4	17.2	00.0	10.3	10.3	00.0	6.9	3.4	3.4	6.9	13.8	00.0	100.
23	10.3	00.0	6.9	00.0	00.0	3.4	17.2	3.4	6.9	6.9	6.9	3.4	6.9	3.4	13.8	10.3	00.0	100.
24	10.3	00.0	3.4	3.4	00.0	3.4	13.8	3.4	6.9	6.9	13.8	3.4	3.4	6.9	10.3	10.3	00.0	100.
ALL	11.1	3.2	1.7	.9	3.3	3.4	10.5	5.6	7.3	5.3	5.3	5.9	8.2	6.2	12.2	9.9	00.0	100.

NUMBER OF OBS = 696

NPPD-COOPER NUCLEAR STATION 100-M WIND DIRECTION 2012

PROGRAM: WINPER
VERSION: PC-1.0

HOURLY WIND ROSES (PERCENT)

MARCH

WIND DIRECTION

HR. OF DAY	N	NNE	NE	ENE	E	ESE	SE	SSE	S	SSW	SW	WSW	W	WNW	NW	NNW	CALM	TOTAL
1	3.2	00.0	3.2	00.0	00.0	3.2	3.2	12.9	22.6	16.1	00.0	6.5	3.2	12.9	00.0	12.9	00.0	100.
2	6.5	6.5	00.0	00.0	3.2	00.0	3.2	12.9	25.8	9.7	6.5	3.2	3.2	12.9	3.2	3.2	00.0	100.
3	6.5	6.5	3.2	00.0	00.0	3.2	3.2	6.5	29.0	16.1	3.2	3.2	3.2	12.9	00.0	3.2	00.0	100.
4	6.5	3.2	00.0	3.2	3.2	6.5	00.0	12.9	32.3	6.5	3.2	3.2	00.0	9.7	9.7	00.0	00.0	100.
5	3.2	3.2	00.0	00.0	6.5	6.5	3.2	9.7	22.6	16.1	3.2	3.2	00.0	6.5	16.1	00.0	00.0	100.
6	3.2	3.2	00.0	3.2	00.0	3.2	12.9	6.5	29.0	12.9	3.2	3.2	00.0	6.5	3.2	9.7	00.0	100.
7	3.2	00.0	9.7	00.0	00.0	3.2	12.9	16.1	25.8	12.9	3.2	00.0	00.0	6.5	6.5	00.0	00.0	100.
8	00.0	3.2	00.0	3.2	3.2	3.2	9.7	19.4	22.6	19.4	00.0	00.0	6.5	3.2	3.2	3.2	00.0	100.
9	3.2	00.0	00.0	00.0	6.5	6.5	9.7	16.1	19.4	22.6	00.0	00.0	00.0	9.7	3.2	3.2	00.0	100.
10	00.0	00.0	00.0	00.0	3.2	12.9	3.2	19.4	16.1	19.4	6.5	00.0	00.0	9.7	3.2	6.5	00.0	100.
11	3.2	00.0	00.0	00.0	3.2	9.7	9.7	16.1	6.5	19.4	9.7	6.5	00.0	6.5	6.5	3.2	00.0	100.
12	3.2	00.0	00.0	3.2	3.2	6.5	9.7	12.9	6.5	16.1	9.7	6.5	6.5	9.7	00.0	6.5	00.0	100.
13	6.5	00.0	00.0	00.0	9.7	3.2	9.7	9.7	16.1	6.5	6.5	6.5	3.2	3.2	16.1	3.2	00.0	100.
14	3.2	3.2	3.2	00.0	3.2	3.2	6.5	12.9	16.1	9.7	6.5	9.7	00.0	00.0	12.9	9.7	00.0	100.
15	6.5	6.5	00.0	00.0	3.2	9.7	6.5	6.5	19.4	12.9	6.5	6.5	00.0	3.2	12.9	00.0	00.0	100.
16	6.5	00.0	3.2	00.0	3.2	6.5	9.7	3.2	25.8	9.7	6.5	3.2	3.2	3.2	6.5	9.7	00.0	100.
17	3.2	00.0	3.2	00.0	9.7	3.2	3.2	6.5	25.8	9.7	6.5	00.0	6.5	3.2	6.5	12.9	00.0	100.
18	00.0	6.5	00.0	00.0	9.7	3.2	6.5	9.7	19.4	9.7	3.2	3.2	6.5	3.2	16.1	3.2	00.0	100.
19	6.5	3.2	3.2	00.0	6.5	00.0	6.5	16.1	19.4	9.7	00.0	3.2	6.5	9.7	9.7	00.0	00.0	100.
20	3.2	3.2	00.0	00.0	6.5	00.0	00.0	29.0	19.4	6.5	00.0	3.2	9.7	9.7	3.2	6.5	00.0	100.
21	6.5	00.0	00.0	00.0	6.5	00.0	3.2	16.1	32.3	6.5	3.2	3.2	3.2	6.5	6.5	6.5	00.0	100.
22	3.2	3.2	00.0	00.0	6.5	00.0	6.5	16.1	22.6	9.7	6.5	00.0	3.2	6.5	6.5	9.7	00.0	100.
23	6.5	00.0	3.2	00.0	3.2	6.5	00.0	9.7	35.5	3.2	9.7	00.0	6.5	00.0	6.5	9.7	00.0	100.
24	3.2	00.0	3.2	00.0	00.0	6.5	00.0	12.9	25.8	12.9	3.2	9.7	3.2	00.0	9.7	9.7	00.0	100.
ALL	4.0	2.2	1.5	.5	4.2	4.4	5.8	12.9	22.3	12.2	4.4	3.5	3.1	6.5	7.0	5.5	00.0	100.

NUMBER OF OBS = 744

NPPD-COOPER NUCLEAR STATION 100-M WIND DIRECTION 2012

PROGRAM: WINPER
VERSION: PC-1.0

HOURLY WIND ROSES (PERCENT)

JAN-MAR

WIND DIRECTION

HR. OF DAY	N	NNE	NE	ENE	E	ESE	SE	SSE	S	SSW	SW	WSW	W	WNW	NW	NNW	CALM	TOTAL
1	5.5	1.1	3.3	1.1	1.1	2.2	8.8	7.7	11.0	9.9	6.6	6.6	4.4	11.0	8.8	11.0	00.0	100.
2	5.5	3.3	2.2	2.2	2.2	2.2	5.5	7.7	13.2	9.9	7.7	2.2	6.6	8.8	14.3	6.6	00.0	100.
3	5.5	5.5	1.1	3.3	1.1	2.2	6.6	4.4	15.4	9.9	8.8	3.3	4.4	7.7	9.9	11.0	00.0	100.
4	5.5	3.3	00.0	3.3	1.1	7.7	2.2	11.0	15.4	3.3	7.7	6.6	2.2	7.7	15.4	7.7	00.0	100.
5	5.5	2.2	00.0	1.1	3.3	6.6	4.4	9.9	9.9	9.9	4.4	4.4	6.6	9.9	16.5	5.5	00.0	100.
6	7.7	2.2	00.0	2.2	2.2	4.4	8.8	6.6	13.2	6.6	6.6	5.5	5.5	9.9	11.0	7.7	00.0	100.
7	4.4	3.3	3.3	1.1	3.3	3.3	8.8	11.0	12.1	7.7	3.3	7.7	4.4	7.7	12.1	6.6	00.0	100.
8	3.3	4.4	1.1	3.3	2.2	4.4	8.8	9.9	13.2	6.6	7.7	3.3	6.6	4.4	14.3	6.6	00.0	100.
9	9.9	2.2	1.1	1.1	4.4	4.4	7.7	7.7	12.1	8.8	5.5	4.4	3.3	8.8	14.3	4.4	00.0	100.
10	6.6	3.3	1.1	1.1	3.3	8.8	2.2	11.0	9.9	11.0	6.6	3.3	4.4	11.0	7.7	8.8	00.0	100.
11	8.8	2.2	00.0	2.2	2.2	5.5	8.8	7.7	9.9	8.8	7.7	6.6	4.4	4.4	13.2	7.7	00.0	100.
12	9.9	00.0	1.1	1.1	2.2	6.6	7.7	6.6	11.0	9.9	7.7	4.4	5.5	5.5	15.4	5.5	00.0	100.
13	9.9	3.3	00.0	00.0	4.4	3.3	9.9	6.6	12.1	4.4	7.7	4.4	5.5	5.5	17.6	5.5	00.0	100.
14	9.9	3.3	2.2	00.0	2.2	4.4	6.6	7.7	11.0	8.8	6.6	4.4	5.5	4.4	15.4	7.7	00.0	100.
15	11.0	3.3	00.0	00.0	3.3	5.5	7.7	4.4	13.2	8.8	6.6	4.4	6.6	6.6	13.2	5.5	00.0	100.
16	11.0	1.1	1.1	00.0	3.3	3.3	7.7	4.4	12.1	6.6	9.9	5.5	6.6	8.8	8.8	9.9	00.0	100.
17	6.6	2.2	2.2	00.0	6.6	2.2	3.3	6.6	13.2	5.5	8.8	6.6	4.4	5.5	13.2	13.2	00.0	100.
18	4.4	3.3	1.1	00.0	6.6	2.2	5.5	6.6	11.0	7.7	8.8	3.3	5.5	4.4	14.3	15.4	00.0	100.
19	9.9	4.4	2.2	2.2	3.3	2.2	7.7	7.7	13.2	7.7	4.4	4.4	6.6	5.5	11.0	7.7	00.0	100.
20	5.5	5.5	3.3	1.1	3.3	4.4	5.5	12.1	9.9	8.8	6.6	4.4	5.5	3.3	12.1	8.8	00.0	100.
21	5.5	3.3	3.3	1.1	3.3	4.4	5.5	8.8	15.4	8.8	6.6	5.5	3.3	3.3	11.0	11.0	00.0	100.
22	7.7	2.2	3.3	2.2	3.3	2.2	7.7	7.7	13.2	9.9	5.5	6.6	4.4	3.3	11.0	9.9	00.0	100.
23	7.7	1.1	4.4	00.0	2.2	4.4	6.6	5.5	15.4	9.9	8.8	2.2	7.7	2.2	12.1	9.9	00.0	100.
24	6.6	1.1	3.3	1.1	1.1	4.4	5.5	7.7	13.2	9.9	9.9	5.5	5.5	3.3	12.1	9.9	00.0	100.
ALL	7.2	2.8	1.7	1.3	3.0	4.2	6.6	7.8	12.5	8.3	7.1	4.8	5.2	6.4	12.7	8.5	00.0	100.

NUMBER OF OBS = 2184

NPPD-COOPER NUCLEAR STATION 100-M WIND DIRECTION 2012

PROGRAM: WINPER
VERSION: PC-1.0

HOURLY WIND ROSES (PERCENT)

APRIL

WIND DIRECTION

HR. OF DAY	N	NNE	NE	ENE	E	ESE	SE	SSE	S	SSW	SW	WSW	W	WNW	NW	NNW	CALM	TOTAL
1	16.7	10.0	00.0	6.7	00.0	10.0	16.7	3.3	16.7	3.3	3.3	00.0	3.3	00.0	00.0	10.0	00.0	100.
2	16.7	6.7	6.7	6.7	00.0	6.7	13.3	3.3	16.7	10.0	00.0	3.3	00.0	3.3	00.0	6.7	00.0	100.
3	00.0	10.0	3.3	10.0	00.0	6.7	13.3	6.7	16.7	6.7	00.0	00.0	00.0	3.3	10.0	13.3	00.0	100.
4	6.7	6.7	3.3	6.7	3.3	6.7	6.7	13.3	13.3	6.7	3.3	00.0	00.0	3.3	3.3	16.7	00.0	100.
5	3.3	10.0	3.3	3.3	3.3	3.3	23.3	00.0	16.7	10.0	00.0	00.0	00.0	00.0	13.3	10.0	00.0	100.
6	6.7	3.3	6.7	3.3	3.3	6.7	16.7	10.0	6.7	10.0	3.3	00.0	3.3	00.0	10.0	10.0	00.0	100.
7	6.7	3.3	6.7	6.7	00.0	6.7	6.7	13.3	13.3	6.7	3.3	3.3	3.3	3.3	6.7	10.0	00.0	100.
8	6.7	6.7	6.7	6.7	00.0	3.3	16.7	3.3	13.3	10.0	3.3	00.0	00.0	10.0	6.7	6.7	00.0	100.
9	3.3	6.7	00.0	10.0	3.3	3.3	23.3	3.3	10.0	13.3	00.0	00.0	3.3	3.3	6.7	10.0	00.0	100.
10	3.3	10.0	3.3	10.0	00.0	3.3	13.3	10.0	10.0	3.3	10.0	3.3	00.0	3.3	3.3	13.3	00.0	100.
11	3.3	6.7	3.3	6.7	6.7	3.3	13.3	6.7	13.3	3.3	6.7	3.3	3.3	00.0	10.0	10.0	00.0	100.
12	10.0	6.7	10.0	00.0	6.7	3.3	10.0	6.7	6.7	13.3	6.7	00.0	00.0	00.0	3.3	16.7	00.0	100.
13	13.3	6.7	6.7	6.7	3.3	10.0	6.7	3.3	6.7	10.0	13.3	00.0	00.0	3.3	3.3	6.7	00.0	100.
14	13.3	3.3	3.3	13.3	00.0	3.3	13.3	00.0	13.3	10.0	00.0	10.0	00.0	3.3	00.0	13.3	00.0	100.
15	10.0	3.3	6.7	13.3	00.0	6.7	6.7	6.7	6.7	10.0	3.3	3.3	6.7	3.3	00.0	13.3	00.0	100.
16	13.3	00.0	3.3	10.0	3.3	6.7	13.3	00.0	10.0	3.3	13.3	00.0	3.3	3.3	6.7	10.0	00.0	100.
17	13.3	3.3	3.3	10.0	3.3	3.3	13.3	6.7	10.0	6.7	6.7	00.0	00.0	3.3	10.0	6.7	00.0	100.
18	6.7	6.7	10.0	3.3	3.3	6.7	6.7	00.0	13.3	3.3	6.7	3.3	3.3	6.7	6.7	13.3	00.0	100.
19	6.7	13.3	10.0	3.3	6.7	6.7	6.7	3.3	10.0	00.0	16.7	00.0	00.0	3.3	6.7	6.7	00.0	100.
20	6.7	13.3	00.0	10.0	6.7	6.7	10.0	6.7	6.7	3.3	6.7	6.7	00.0	00.0	6.7	10.0	00.0	100.
21	20.0	3.3	00.0	3.3	13.3	3.3	10.0	13.3	10.0	3.3	3.3	3.3	00.0	00.0	3.3	10.0	00.0	100.
22	13.3	3.3	10.0	3.3	6.7	3.3	13.3	3.3	16.7	00.0	3.3	6.7	3.3	00.0	3.3	10.0	00.0	100.
23	6.7	10.0	6.7	6.7	6.7	3.3	13.3	6.7	16.7	00.0	00.0	00.0	3.3	3.3	6.7	10.0	00.0	100.
24	6.7	10.0	10.0	3.3	6.7	6.7	20.0	6.7	10.0	3.3	00.0	00.0	3.3	00.0	3.3	10.0	00.0	100.
ALL	8.9	6.8	5.1	6.8	3.6	5.4	12.8	5.7	11.8	6.3	4.7	1.9	1.7	2.5	5.4	10.6	00.0	100.

NUMBER OF OBS = 720

NPPD-COOPER NUCLEAR STATION 100-M WIND DIRECTION 2012

PROGRAM: WINPER
VERSION: PC-1.0

HOURLY WIND ROSES (PERCENT)

MAY

WIND DIRECTION

HR. OF DAY	N	NNE	NE	ENE	E	ESE	SE	SSE	S	SSW	SW	WSW	W	WNW	NW	NNW	CALM	TOTAL
1	3.2	9.7	3.2	3.2	3.2	3.2	6.5	29.0	9.7	9.7	3.2	00.0	3.2	00.0	00.0	12.9	00.0	100.
2	6.5	9.7	3.2	6.5	00.0	3.2	6.5	22.6	9.7	12.9	6.5	00.0	3.2	00.0	00.0	9.7	00.0	100.
3	6.5	9.7	3.2	00.0	3.2	00.0	12.9	19.4	9.7	9.7	6.5	6.5	3.2	00.0	3.2	6.5	00.0	100.
4	9.7	6.5	6.5	00.0	3.2	3.2	3.2	19.4	12.9	6.5	9.7	00.0	3.2	6.5	3.2	6.5	00.0	100.
5	3.2	9.7	6.5	00.0	00.0	6.5	00.0	25.8	19.4	00.0	9.7	00.0	00.0	6.5	3.2	9.7	00.0	100.
6	12.9	9.7	3.2	00.0	3.2	6.5	3.2	19.4	16.1	3.2	9.7	00.0	3.2	00.0	6.5	3.2	00.0	100.
7	9.7	12.9	3.2	3.2	00.0	3.2	6.5	22.6	16.1	3.2	6.5	00.0	3.2	00.0	6.5	3.2	00.0	100.
8	3.2	12.9	3.2	6.5	00.0	3.2	6.5	19.4	16.1	00.0	6.5	3.2	00.0	6.5	3.2	9.7	00.0	100.
9	6.5	6.5	9.7	00.0	3.2	3.2	6.5	12.9	19.4	6.5	00.0	3.2	00.0	9.7	9.7	3.2	00.0	100.
10	3.2	3.2	6.5	6.5	00.0	6.5	6.5	6.5	25.8	6.5	3.2	00.0	00.0	3.2	6.5	16.1	00.0	100.
11	6.5	3.2	9.7	3.2	00.0	00.0	9.7	9.7	29.0	3.2	3.2	3.2	00.0	3.2	3.2	12.9	00.0	100.
12	9.7	00.0	6.5	6.5	3.2	3.2	00.0	12.9	25.8	3.2	9.7	00.0	00.0	6.5	00.0	12.9	00.0	100.
13	12.9	9.7	3.2	00.0	3.2	6.5	3.2	3.2	35.5	00.0	6.5	3.2	00.0	6.5	00.0	6.5	00.0	100.
14	12.9	3.2	00.0	3.2	6.5	00.0	3.2	12.9	29.0	00.0	00.0	6.5	00.0	6.5	3.2	12.9	00.0	100.
15	00.0	9.7	3.2	3.2	00.0	3.2	00.0	6.5	38.7	00.0	00.0	00.0	6.5	9.7	00.0	19.4	00.0	100.
16	12.9	00.0	6.5	3.2	3.2	3.2	00.0	9.7	32.3	00.0	00.0	00.0	3.2	3.2	9.7	12.9	00.0	100.
17	16.1	00.0	00.0	9.7	00.0	00.0	3.2	9.7	32.3	00.0	00.0	3.2	00.0	3.2	6.5	16.1	00.0	100.
18	9.7	00.0	00.0	3.2	6.5	00.0	3.2	12.9	29.0	00.0	3.2	00.0	00.0	00.0	6.5	25.8	00.0	100.
19	12.9	00.0	3.2	00.0	6.5	6.5	00.0	16.1	25.8	00.0	3.2	00.0	00.0	00.0	6.5	19.4	00.0	100.
20	16.1	3.2	00.0	6.5	00.0	3.2	9.7	16.1	22.6	00.0	3.2	00.0	00.0	00.0	3.2	16.1	00.0	100.
21	22.6	3.2	00.0	3.2	6.5	3.2	9.7	25.8	12.9	3.2	00.0	00.0	00.0	00.0	3.2	6.5	00.0	100.
22	12.9	12.9	3.2	00.0	6.5	3.2	9.7	19.4	19.4	3.2	00.0	00.0	00.0	00.0	3.2	6.5	00.0	100.
23	12.9	6.5	6.5	3.2	6.5	3.2	00.0	29.0	19.4	3.2	00.0	00.0	00.0	00.0	3.2	6.5	00.0	100.
24	12.9	6.5	3.2	00.0	12.9	00.0	3.2	22.6	19.4	6.5	3.2	00.0	00.0	00.0	00.0	9.7	00.0	100.
ALL	9.8	6.2	3.9	3.0	3.2	3.1	4.7	16.8	21.9	3.4	3.9	1.2	1.2	3.0	3.8	11.0	00.0	100.

NUMBER OF OBS = 744

NPPD-COOPER NUCLEAR STATION 100-M WIND DIRECTION 2012

PROGRAM: WINPER
VERSION: PC-1.0

HOURLY WIND ROSES (PERCENT)

JUNE

WIND DIRECTION

HR. OF DAY	N	NNE	NE	ENE	E	ESE	SE	SSE	S	SSW	SW	WSW	W	WNW	NW	NNW	CALM	TOTAL
1	13.3	3.3	00.0	00.0	3.3	10.0	16.7	13.3	13.3	16.7	6.7	00.0	3.3	00.0	00.0	00.0	00.0	100.
2	6.7	00.0	00.0	00.0	3.3	6.7	13.3	20.0	13.3	16.7	3.3	6.7	3.3	00.0	00.0	6.7	00.0	100.
3	3.3	3.3	00.0	00.0	3.3	6.7	3.3	23.3	20.0	6.7	16.7	00.0	3.3	00.0	6.7	3.3	00.0	100.
4	3.3	3.3	00.0	00.0	3.3	3.3	10.0	16.7	23.3	6.7	13.3	00.0	00.0	10.0	6.7	00.0	00.0	100.
5	6.7	00.0	00.0	00.0	6.7	3.3	10.0	16.7	23.3	6.7	6.7	3.3	6.7	3.3	6.7	00.0	00.0	100.
6	3.3	3.3	00.0	00.0	3.3	3.3	10.0	16.7	33.3	6.7	3.3	3.3	3.3	6.7	3.3	00.0	00.0	100.
7	3.3	3.3	00.0	00.0	3.3	00.0	13.3	23.3	23.3	10.0	00.0	6.7	3.3	6.7	3.3	00.0	00.0	100.
8	00.0	3.3	3.3	00.0	3.3	00.0	10.0	16.7	26.7	16.7	3.3	00.0	00.0	6.7	6.7	3.3	00.0	100.
9	3.3	00.0	3.3	3.3	3.3	00.0	10.0	6.7	23.3	26.7	6.7	00.0	00.0	3.3	6.7	3.3	00.0	100.
10	00.0	3.3	3.3	3.3	6.7	00.0	6.7	13.3	16.7	20.0	6.7	3.3	00.0	00.0	6.7	10.0	00.0	100.
11	10.0	00.0	3.3	00.0	6.7	00.0	6.7	23.3	10.0	16.7	10.0	3.3	00.0	00.0	6.7	3.3	00.0	100.
12	6.7	3.3	00.0	00.0	3.3	00.0	13.3	20.0	16.7	10.0	6.7	6.7	00.0	00.0	10.0	3.3	00.0	100.
13	3.3	3.3	00.0	3.3	3.3	00.0	13.3	13.3	23.3	13.3	3.3	3.3	00.0	3.3	6.7	6.7	00.0	100.
14	6.7	3.3	00.0	00.0	6.7	00.0	20.0	10.0	26.7	3.3	00.0	6.7	6.7	00.0	6.7	3.3	00.0	100.
15	10.0	00.0	00.0	00.0	3.3	6.7	13.3	10.0	23.3	10.0	3.3	6.7	00.0	00.0	6.7	6.7	00.0	100.
16	10.0	3.3	00.0	00.0	6.7	6.7	10.0	13.3	20.0	6.7	3.3	6.7	00.0	3.3	3.3	6.7	00.0	100.
17	10.0	6.7	3.3	00.0	6.7	3.3	13.3	10.0	20.0	6.7	6.7	3.3	00.0	00.0	3.3	6.7	00.0	100.
18	6.7	6.7	3.3	6.7	3.3	3.3	13.3	10.0	16.7	13.3	00.0	3.3	00.0	3.3	00.0	10.0	00.0	100.
19	10.0	3.3	6.7	6.7	3.3	6.7	10.0	10.0	16.7	13.3	3.3	00.0	00.0	00.0	00.0	10.0	00.0	100.
20	10.0	3.3	00.0	10.0	10.0	3.3	13.3	10.0	20.0	3.3	6.7	00.0	00.0	6.7	00.0	3.3	00.0	100.
21	3.3	6.7	3.3	6.7	10.0	6.7	20.0	00.0	23.3	00.0	6.7	00.0	3.3	3.3	00.0	6.7	00.0	100.
22	6.7	00.0	6.7	6.7	10.0	3.3	20.0	6.7	20.0	3.3	6.7	00.0	00.0	3.3	00.0	6.7	00.0	100.
23	3.3	00.0	3.3	00.0	3.3	20.0	10.0	13.3	23.3	6.7	3.3	00.0	3.3	00.0	00.0	10.0	00.0	100.
24	6.7	3.3	00.0	6.7	3.3	6.7	16.7	10.0	16.7	13.3	10.0	00.0	3.3	00.0	00.0	3.3	00.0	100.
ALL	6.1	2.8	1.7	2.2	5.0	4.2	12.4	13.6	20.6	10.6	5.7	2.6	1.7	2.5	3.8	4.7	00.0	100.

NUMBER OF OBS = 720

NPPD-COOPER NUCLEAR STATION 100-M WIND DIRECTION 2012

PROGRAM: WINPER
VERSION: PC-1.0

HOURLY WIND ROSES (PERCENT)

APR-JUN

WIND DIRECTION

HR. OF DAY	N	NNE	NE	ENE	E	ESE	SE	SSE	S	SSW	SW	WSW	W	WNW	NW	NNW	CALM	TOTAL
1	11.0	7.7	1.1	3.3	2.2	7.7	13.2	15.4	13.2	9.9	4.4	00.0	3.3	00.0	00.0	7.7	00.0	100.
2	9.9	5.5	3.3	4.4	1.1	5.5	11.0	15.4	13.2	13.2	3.3	3.3	2.2	1.1	00.0	7.7	00.0	100.
3	3.3	7.7	2.2	3.3	2.2	4.4	9.9	16.5	15.4	7.7	7.7	2.2	2.2	1.1	6.6	7.7	00.0	100.
4	6.6	5.5	3.3	2.2	3.3	4.4	6.6	16.5	16.5	6.6	8.8	00.0	1.1	6.6	4.4	7.7	00.0	100.
5	4.4	6.6	3.3	1.1	3.3	4.4	11.0	14.3	19.8	5.5	5.5	1.1	2.2	3.3	7.7	6.6	00.0	100.
6	7.7	5.5	3.3	1.1	3.3	5.5	9.9	15.4	18.7	6.6	5.5	1.1	3.3	2.2	6.6	4.4	00.0	100.
7	6.6	6.6	3.3	3.3	1.1	3.3	8.8	19.8	17.6	6.6	3.3	3.3	3.3	3.3	5.5	4.4	00.0	100.
8	3.3	7.7	4.4	4.4	1.1	2.2	11.0	13.2	18.7	8.8	4.4	1.1	00.0	7.7	5.5	6.6	00.0	100.
9	4.4	4.4	4.4	4.4	3.3	2.2	13.2	7.7	17.6	15.4	2.2	1.1	1.1	5.5	7.7	5.5	00.0	100.
10	2.2	5.5	4.4	6.6	2.2	3.3	8.8	9.9	17.6	9.9	6.6	2.2	00.0	2.2	5.5	13.2	00.0	100.
11	6.6	3.3	5.5	3.3	4.4	1.1	9.9	13.2	17.6	7.7	6.6	3.3	1.1	1.1	6.6	8.8	00.0	100.
12	8.8	3.3	5.5	2.2	4.4	2.2	7.7	13.2	16.5	8.8	7.7	2.2	00.0	2.2	4.4	11.0	00.0	100.
13	9.9	6.6	3.3	3.3	3.3	5.5	7.7	6.6	22.0	7.7	7.7	2.2	00.0	4.4	3.3	6.6	00.0	100.
14	11.0	3.3	1.1	5.5	4.4	1.1	12.1	7.7	23.1	4.4	00.0	7.7	2.2	3.3	3.3	9.9	00.0	100.
15	6.6	4.4	3.3	5.5	1.1	5.5	6.6	7.7	23.1	6.6	2.2	3.3	4.4	4.4	2.2	13.2	00.0	100.
16	12.1	1.1	3.3	4.4	4.4	5.5	7.7	7.7	20.9	3.3	5.5	2.2	2.2	3.3	6.6	9.9	00.0	100.
17	13.2	3.3	2.2	6.6	3.3	2.2	9.9	8.8	20.9	4.4	4.4	2.2	00.0	2.2	6.6	9.9	00.0	100.
18	7.7	4.4	4.4	4.4	4.4	3.3	7.7	7.7	19.8	5.5	3.3	2.2	1.1	3.3	4.4	16.5	00.0	100.
19	9.9	5.5	6.6	3.3	5.5	6.6	5.5	9.9	17.6	4.4	7.7	00.0	00.0	1.1	4.4	12.1	00.0	100.
20	11.0	6.6	00.0	8.8	5.5	4.4	11.0	11.0	16.5	2.2	5.5	2.2	00.0	2.2	3.3	9.9	00.0	100.
21	15.4	4.4	1.1	4.4	9.9	4.4	13.2	13.2	15.4	2.2	3.3	1.1	1.1	1.1	2.2	7.7	00.0	100.
22	11.0	5.5	6.6	3.3	7.7	3.3	14.3	9.9	18.7	2.2	3.3	2.2	1.1	1.1	2.2	7.7	00.0	100.
23	7.7	5.5	5.5	3.3	5.5	8.8	7.7	16.5	19.8	3.3	1.1	00.0	2.2	1.1	3.3	8.8	00.0	100.
24	8.8	6.6	4.4	3.3	7.7	4.4	13.2	13.2	15.4	7.7	4.4	00.0	2.2	00.0	1.1	7.7	00.0	100.
ALL	8.3	5.3	3.6	4.0	3.9	4.2	9.9	12.1	18.1	6.7	4.8	1.9	1.5	2.7	4.3	8.8	00.0	100.

NUMBER OF OBS = 2184

NPPD-COOPER NUCLEAR STATION 100-M WIND DIRECTION 2012

PROGRAM: WINPER
VERSION: PC-1.0

HOURLY WIND ROSES (PERCENT)

JAN-JUN

WIND DIRECTION

HR. OF DAY	N	NNE	NE	ENE	E	ESE	SE	SSE	S	SSW	SW	WSW	W	WNW	NW	NNW	CALM	TOTAL
1	8.2	4.4	2.2	2.2	1.6	4.9	11.0	11.5	12.1	9.9	5.5	3.3	3.8	5.5	4.4	9.3	00.0	100.
2	7.7	4.4	2.7	3.3	1.6	3.8	8.2	11.5	13.2	11.5	5.5	2.7	4.4	4.9	7.1	7.1	00.0	100.
3	4.4	6.6	1.6	3.3	1.6	3.3	8.2	10.4	15.4	8.8	8.2	2.7	3.3	4.4	8.2	9.3	00.0	100.
4	6.0	4.4	1.6	2.7	2.2	6.0	4.4	13.7	15.9	4.9	8.2	3.3	1.6	7.1	9.9	7.7	00.0	100.
5	4.9	4.4	1.6	1.1	3.3	5.5	7.7	12.1	14.8	7.7	4.9	2.7	4.4	6.6	12.1	6.0	00.0	100.
6	7.7	3.8	1.6	1.6	2.7	4.9	9.3	11.0	15.9	6.6	6.0	3.3	4.4	6.0	8.8	6.0	00.0	100.
7	5.5	4.9	3.3	2.2	2.2	3.3	8.8	15.4	14.8	7.1	3.3	5.5	3.8	5.5	8.8	5.5	00.0	100.
8	3.3	6.0	2.7	3.8	1.6	3.3	9.9	11.5	15.9	7.7	6.0	2.2	3.3	6.0	9.9	6.6	00.0	100.
9	7.1	3.3	2.7	2.7	3.8	3.3	10.4	7.7	14.8	12.1	3.8	2.7	2.2	7.1	11.0	4.9	00.0	100.
10	4.4	4.4	2.7	3.8	2.7	6.0	5.5	10.4	13.7	10.4	6.6	2.7	2.2	6.6	6.6	11.0	00.0	100.
11	7.7	2.7	2.7	2.7	3.3	3.3	9.3	10.4	13.7	8.2	7.1	4.9	2.7	2.7	9.9	8.2	00.0	100.
12	9.3	1.6	3.3	1.6	3.3	4.4	7.7	9.9	13.7	9.3	7.7	3.3	2.7	3.8	9.9	8.2	00.0	100.
13	9.9	4.9	1.6	1.6	3.8	4.4	8.8	6.6	17.0	6.0	7.7	3.3	2.7	4.9	10.4	6.0	00.0	100.
14	10.4	3.3	1.6	2.7	3.3	2.7	9.3	7.7	17.0	6.6	3.3	6.0	3.8	3.8	9.3	8.8	00.0	100.
15	8.8	3.8	1.6	2.7	2.2	5.5	7.1	6.0	18.1	7.7	4.4	3.8	5.5	5.5	7.7	9.3	00.0	100.
16	11.5	1.1	2.2	2.2	3.8	4.4	7.7	6.0	16.5	4.9	7.7	3.8	4.4	6.0	7.7	9.9	00.0	100.
17	9.9	2.7	2.2	3.3	4.9	2.2	6.6	7.7	17.0	4.9	6.6	4.4	2.2	3.8	9.9	11.5	00.0	100.
18	6.0	3.8	2.7	2.2	5.5	2.7	6.6	7.1	15.4	6.6	6.0	2.7	3.3	3.8	9.3	15.9	00.0	100.
19	9.9	4.9	4.4	2.7	4.4	4.4	6.6	8.8	15.4	6.0	6.0	2.2	3.3	3.3	7.7	9.9	00.0	100.
20	8.2	6.0	1.6	4.9	4.4	4.4	8.2	11.5	13.2	5.5	6.0	3.3	2.7	2.7	7.7	9.3	00.0	100.
21	10.4	3.8	2.2	2.7	6.6	4.4	9.3	11.0	15.4	5.5	4.9	3.3	2.2	2.2	6.6	9.3	00.0	100.
22	9.3	3.8	4.9	2.7	5.5	2.7	11.0	8.8	15.9	6.0	4.4	4.4	2.7	2.2	6.6	8.8	00.0	100.
23	7.7	3.3	4.9	1.6	3.8	6.6	7.1	11.0	17.6	6.6	4.9	1.1	4.9	1.6	7.7	9.3	00.0	100.
24	7.7	3.8	3.8	2.2	4.4	4.4	9.3	10.4	14.3	8.8	7.1	2.7	3.8	1.6	6.6	8.8	00.0	100.
ALL	7.8	4.0	2.6	2.6	3.5	4.2	8.3	9.9	15.3	7.5	5.9	3.4	3.4	4.5	8.5	8.6	00.0	100.

NUMBER OF OBS = 4368

NPPD-COOPER NUCLEAR STATION 100-M WIND DIRECTION 2012

PROGRAM: WINPER
VERSION: PC-1.0

HOURLY WIND ROSES (PERCENT)

JULY

WIND DIRECTION

HR. OF DAY	N	NNE	NE	ENE	E	ESE	SE	SSE	S	SSW	SW	WSW	W	WNW	NW	NNW	CALM	TOTAL
1	3.2	9.7	3.2	00.0	9.7	6.5	00.0	16.1	29.0	19.4	00.0	00.0	00.0	3.2	00.0	00.0	00.0	100.
2	00.0	6.5	9.7	00.0	6.5	00.0	3.2	16.1	25.8	25.8	00.0	00.0	3.2	00.0	00.0	3.2	00.0	100.
3	3.2	9.7	3.2	3.2	6.5	3.2	00.0	9.7	19.4	29.0	9.7	00.0	00.0	00.0	3.2	00.0	00.0	100.
4	9.7	3.2	3.2	3.2	00.0	6.5	3.2	6.5	16.1	29.0	12.9	3.2	00.0	00.0	3.2	00.0	00.0	100.
5	3.2	6.5	3.2	00.0	00.0	3.2	6.5	9.7	19.4	25.8	9.7	3.2	00.0	6.5	00.0	3.2	00.0	100.
6	3.2	9.7	00.0	3.2	00.0	6.5	6.5	3.2	16.1	32.3	3.2	00.0	3.2	9.7	00.0	3.2	00.0	100.
7	3.2	9.7	3.2	3.2	00.0	3.2	9.7	9.7	12.9	29.0	3.2	00.0	00.0	3.2	6.5	3.2	00.0	100.
8	00.0	6.5	12.9	00.0	00.0	00.0	16.1	3.2	16.1	25.8	9.7	3.2	00.0	00.0	3.2	3.2	00.0	100.
9	6.5	3.2	12.9	3.2	00.0	00.0	9.7	3.2	12.9	32.3	12.9	00.0	00.0	00.0	00.0	3.2	00.0	100.
10	9.7	3.2	12.9	3.2	00.0	3.2	3.2	3.2	16.1	35.5	6.5	00.0	3.2	00.0	00.0	00.0	00.0	100.
11	6.5	9.7	3.2	6.5	00.0	3.2	3.2	9.7	12.9	35.5	9.7	00.0	00.0	00.0	00.0	00.0	00.0	100.
12	3.2	6.5	9.7	00.0	6.5	3.2	3.2	9.7	25.8	16.1	6.5	00.0	00.0	00.0	00.0	9.7	00.0	100.
13	19.4	00.0	6.5	3.2	3.2	6.5	12.9	3.2	32.3	6.5	6.5	00.0	00.0	00.0	00.0	00.0	00.0	100.
14	16.1	00.0	6.5	3.2	3.2	6.5	12.9	9.7	25.8	9.7	3.2	00.0	00.0	00.0	00.0	3.2	00.0	100.
15	3.2	12.9	00.0	6.5	00.0	6.5	9.7	9.7	29.0	12.9	00.0	3.2	00.0	00.0	3.2	3.2	00.0	100.
16	12.9	3.2	6.5	3.2	3.2	9.7	9.7	9.7	16.1	19.4	3.2	3.2	00.0	00.0	00.0	00.0	00.0	100.
17	12.9	6.5	3.2	3.2	00.0	6.5	19.4	6.5	19.4	16.1	3.2	3.2	00.0	00.0	00.0	00.0	00.0	100.
18	6.5	16.1	3.2	00.0	00.0	3.2	22.6	22.6	12.9	3.2	3.2	3.2	3.2	00.0	00.0	00.0	00.0	100.
19	6.5	9.7	9.7	00.0	00.0	3.2	19.4	29.0	12.9	6.5	00.0	00.0	3.2	00.0	00.0	00.0	00.0	100.
20	6.5	9.7	12.9	6.5	00.0	6.5	19.4	29.0	9.7	00.0	00.0	00.0	00.0	00.0	00.0	00.0	00.0	100.
21	6.5	9.7	9.7	6.5	00.0	9.7	12.9	22.6	22.6	00.0	00.0	00.0	00.0	00.0	00.0	00.0	00.0	100.
22	3.2	6.5	9.7	12.9	00.0	00.0	19.4	25.8	19.4	00.0	3.2	00.0	00.0	00.0	00.0	00.0	00.0	100.
23	3.2	6.5	6.5	9.7	6.5	00.0	3.2	32.3	25.8	3.2	00.0	00.0	3.2	00.0	00.0	00.0	00.0	100.
24	00.0	12.9	3.2	6.5	3.2	6.5	3.2	29.0	29.0	6.5	00.0	00.0	00.0	00.0	00.0	00.0	00.0	100.
ALL	6.2	7.4	6.5	3.6	2.0	4.3	9.5	13.7	19.9	17.5	4.4	.9	.8	.9	.8	1.5	00.0	100.

NUMBER OF OBS = 744

NPPD-COOPER NUCLEAR STATION 100-M WIND DIRECTION 2012

PROGRAM: WINPER
VERSION: PC-1.0

HOURLY WIND ROSES (PERCENT)

AUGUST

WIND DIRECTION

HR. OF DAY	N	NNE	NE	ENE	E	ESE	SE	SSE	S	SSW	SW	WSW	W	WNW	NW	NNW	CALM	TOTAL
1	9.7	9.7	6.5	6.5	6.5	6.5	9.7	6.5	9.7	19.4	3.2	00.0	00.0	00.0	3.2	3.2	00.0	100.
2	12.9	9.7	3.2	3.2	3.2	9.7	12.9	3.2	12.9	12.9	3.2	3.2	00.0	3.2	6.5	00.0	00.0	100.
3	12.9	6.5	3.2	3.2	3.2	6.5	12.9	3.2	12.9	9.7	3.2	3.2	3.2	3.2	3.2	9.7	00.0	100.
4	16.1	00.0	3.2	00.0	3.2	12.9	9.7	6.5	12.9	9.7	3.2	00.0	6.5	3.2	00.0	12.9	00.0	100.
5	19.4	00.0	00.0	3.2	3.2	6.5	9.7	9.7	12.9	9.7	6.5	00.0	3.2	3.2	3.2	9.7	00.0	100.
6	19.4	3.2	00.0	00.0	3.2	6.5	9.7	6.5	19.4	9.7	3.2	3.2	00.0	00.0	6.5	9.7	00.0	100.
7	16.1	3.2	00.0	00.0	9.7	3.2	6.5	6.5	19.4	12.9	00.0	3.2	00.0	00.0	3.2	16.1	00.0	100.
8	22.6	3.2	00.0	00.0	00.0	6.5	12.9	3.2	19.4	3.2	6.5	3.2	3.2	3.2	3.2	9.7	00.0	100.
9	29.0	00.0	3.2	3.2	3.2	00.0	16.1	3.2	12.9	9.7	3.2	6.5	00.0	00.0	00.0	9.7	00.0	100.
10	25.8	6.5	00.0	3.2	00.0	6.5	3.2	6.5	19.4	12.9	6.5	00.0	3.2	3.2	00.0	3.2	00.0	100.
11	32.3	00.0	00.0	00.0	6.5	6.5	3.2	9.7	19.4	16.1	3.2	00.0	3.2	00.0	00.0	00.0	00.0	100.
12	22.6	3.2	00.0	00.0	3.2	6.5	6.5	9.7	12.9	19.4	00.0	00.0	6.5	00.0	00.0	9.7	00.0	100.
13	19.4	6.5	00.0	6.5	6.5	00.0	3.2	12.9	12.9	16.1	00.0	00.0	00.0	6.5	00.0	9.7	00.0	100.
14	22.6	3.2	00.0	9.7	3.2	3.2	6.5	9.7	12.9	12.9	3.2	00.0	00.0	6.5	00.0	6.5	00.0	100.
15	19.4	9.7	3.2	00.0	00.0	19.4	3.2	6.5	12.9	9.7	3.2	00.0	00.0	00.0	6.5	6.5	00.0	100.
16	25.8	6.5	00.0	3.2	6.5	6.5	12.9	3.2	9.7	19.4	00.0	00.0	00.0	3.2	3.2	00.0	00.0	100.
17	16.1	6.5	00.0	9.7	00.0	6.5	6.5	12.9	9.7	12.9	3.2	00.0	00.0	00.0	3.2	12.9	00.0	100.
18	19.4	6.5	3.2	6.5	00.0	6.5	9.7	12.9	6.5	9.7	6.5	00.0	3.2	00.0	3.2	6.5	00.0	100.
19	12.9	6.5	3.2	6.5	00.0	12.9	6.5	12.9	12.9	6.5	6.5	00.0	00.0	00.0	00.0	12.9	00.0	100.
20	6.5	3.2	16.1	00.0	6.5	6.5	00.0	29.0	16.1	00.0	3.2	00.0	00.0	00.0	00.0	12.9	00.0	100.
21	3.2	9.7	9.7	9.7	3.2	3.2	9.7	12.9	19.4	6.5	00.0	00.0	3.2	00.0	3.2	6.5	00.0	100.
22	3.2	16.1	3.2	6.5	3.2	9.7	6.5	16.1	16.1	6.5	00.0	3.2	00.0	00.0	6.5	3.2	00.0	100.
23	6.5	12.9	6.5	6.5	00.0	6.5	12.9	9.7	19.4	9.7	00.0	00.0	00.0	00.0	3.2	6.5	00.0	100.
24	6.5	12.9	3.2	9.7	3.2	9.7	3.2	16.1	6.5	16.1	3.2	00.0	00.0	00.0	3.2	6.5	00.0	100.
ALL	16.7	6.0	2.8	4.0	3.2	7.0	8.1	9.5	14.1	11.3	3.0	1.1	1.5	1.5	2.6	7.7	00.0	100.

NUMBER OF OBS = 744

NPPD-COOPER NUCLEAR STATION 100-M WIND DIRECTION 2012

PROGRAM: WINPER
VERSION: PC-1.0

HOURLY WIND ROSES (PERCENT)

SEPTEMBER

WIND DIRECTION

HR. OF DAY	N	NNE	NE	ENE	E	ESE	SE	SSE	S	SSW	SW	WSW	W	WNW	NW	NNW	CALM	TOTAL
1	10.0	20.0	00.0	3.3	3.3	00.0	6.7	16.7	26.7	6.7	00.0	00.0	3.3	00.0	3.3	00.0	00.0	100.
2	10.0	16.7	6.7	3.3	00.0	00.0	3.3	16.7	26.7	6.7	3.3	00.0	3.3	00.0	3.3	00.0	00.0	100.
3	16.7	6.7	3.3	6.7	00.0	00.0	00.0	16.7	30.0	3.3	6.7	00.0	00.0	00.0	6.7	3.3	00.0	100.
4	13.3	3.3	20.0	00.0	00.0	00.0	3.3	6.7	33.3	00.0	3.3	3.3	3.3	00.0	3.3	6.7	00.0	100.
5	16.7	3.3	16.7	3.3	00.0	00.0	00.0	16.7	16.7	6.7	3.3	00.0	3.3	3.3	3.3	6.7	00.0	100.
6	13.3	16.7	3.3	3.3	3.3	3.3	00.0	13.3	16.7	00.0	3.3	3.3	3.3	00.0	6.7	10.0	00.0	100.
7	13.3	6.7	6.7	10.0	3.3	3.3	00.0	16.7	10.0	6.7	00.0	00.0	10.0	00.0	3.3	10.0	00.0	100.
8	10.0	10.0	3.3	3.3	00.0	6.7	16.7	6.7	13.3	00.0	3.3	3.3	3.3	00.0	6.7	13.3	00.0	100.
9	16.7	6.7	00.0	3.3	3.3	6.7	13.3	10.0	10.0	3.3	3.3	00.0	3.3	00.0	10.0	10.0	00.0	100.
10	13.3	10.0	3.3	3.3	3.3	3.3	13.3	6.7	13.3	00.0	3.3	3.3	00.0	6.7	10.0	6.7	00.0	100.
11	13.3	6.7	6.7	00.0	6.7	00.0	13.3	3.3	10.0	6.7	6.7	00.0	00.0	6.7	3.3	16.7	00.0	100.
12	20.0	13.3	00.0	10.0	3.3	00.0	6.7	10.0	16.7	3.3	3.3	00.0	00.0	6.7	3.3	3.3	00.0	100.
13	10.0	16.7	6.7	3.3	6.7	3.3	10.0	3.3	10.0	6.7	3.3	00.0	00.0	3.3	3.3	13.3	00.0	100.
14	13.3	10.0	3.3	6.7	3.3	6.7	16.7	3.3	6.7	3.3	3.3	3.3	00.0	00.0	10.0	10.0	00.0	100.
15	16.7	6.7	3.3	3.3	3.3	6.7	13.3	10.0	13.3	3.3	00.0	00.0	00.0	6.7	00.0	13.3	00.0	100.
16	6.7	10.0	3.3	3.3	3.3	10.0	10.0	10.0	13.3	6.7	00.0	00.0	3.3	6.7	3.3	10.0	00.0	100.
17	6.7	10.0	00.0	6.7	3.3	3.3	10.0	10.0	16.7	00.0	6.7	00.0	00.0	3.3	6.7	16.7	00.0	100.
18	6.7	6.7	3.3	00.0	10.0	00.0	3.3	20.0	16.7	3.3	00.0	00.0	3.3	00.0	6.7	20.0	00.0	100.
19	6.7	6.7	3.3	3.3	6.7	3.3	3.3	26.7	13.3	00.0	3.3	00.0	00.0	3.3	3.3	16.7	00.0	100.
20	10.0	6.7	6.7	00.0	6.7	6.7	10.0	26.7	3.3	3.3	3.3	00.0	3.3	00.0	3.3	10.0	00.0	100.
21	3.3	13.3	00.0	6.7	3.3	6.7	13.3	23.3	6.7	3.3	00.0	3.3	3.3	00.0	00.0	13.3	00.0	100.
22	6.7	6.7	6.7	00.0	3.3	6.7	16.7	16.7	13.3	3.3	00.0	00.0	3.3	3.3	00.0	13.3	00.0	100.
23	6.7	3.3	3.3	6.7	3.3	3.3	16.7	26.7	10.0	00.0	3.3	00.0	00.0	3.3	6.7	6.7	00.0	100.
24	10.0	6.7	00.0	10.0	3.3	3.3	10.0	16.7	20.0	3.3	6.7	00.0	00.0	3.3	3.3	3.3	00.0	100.
ALL	11.2	9.3	4.6	4.2	3.5	3.5	8.7	13.9	15.3	3.3	2.9	.8	2.1	2.4	4.6	9.7	00.0	100.

NUMBER OF OBS = 720

NPPD-COOPER NUCLEAR STATION 100-M WIND DIRECTION 2012

PROGRAM: WINPER
VERSION: PC-1.0

HOURLY WIND ROSES (PERCENT)

JUL-SEP

WIND DIRECTION

HR. OF DAY	N	NNE	NE	ENE	E	ESE	SE	SSE	S	SSW	SW	WSW	W	WNW	NW	NNW	CALM	TOTAL
1	7.6	13.0	3.3	3.3	6.5	4.3	5.4	13.0	21.7	15.2	1.1	00.0	1.1	1.1	2.2	1.1	00.0	100.
2	7.6	10.9	6.5	2.2	3.3	3.3	6.5	12.0	21.7	15.2	2.2	1.1	2.2	1.1	3.3	1.1	00.0	100.
3	10.9	7.6	3.3	4.3	3.3	3.3	4.3	9.8	20.7	14.1	6.5	1.1	1.1	1.1	4.3	4.3	00.0	100.
4	13.0	2.2	8.7	1.1	1.1	6.5	5.4	6.5	20.7	13.0	6.5	2.2	3.3	1.1	2.2	6.5	00.0	100.
5	13.0	3.3	6.5	2.2	1.1	3.3	5.4	12.0	16.3	14.1	6.5	1.1	2.2	4.3	2.2	6.5	00.0	100.
6	12.0	9.8	1.1	2.2	2.2	5.4	5.4	7.6	17.4	14.1	3.3	2.2	2.2	3.3	4.3	7.6	00.0	100.
7	10.9	6.5	3.3	4.3	4.3	3.3	5.4	10.9	14.1	16.3	1.1	1.1	3.3	1.1	4.3	9.8	00.0	100.
8	10.9	6.5	5.4	1.1	00.0	4.3	15.2	4.3	16.3	9.8	6.5	3.3	2.2	1.1	4.3	8.7	00.0	100.
9	17.4	3.3	5.4	3.3	2.2	2.2	13.0	5.4	12.0	15.2	6.5	2.2	1.1	00.0	3.3	7.6	00.0	100.
10	16.3	6.5	5.4	3.3	1.1	4.3	6.5	5.4	16.3	16.3	5.4	1.1	2.2	3.3	3.3	3.3	00.0	100.
11	17.4	5.4	3.3	2.2	4.3	3.3	6.5	7.6	14.1	19.6	6.5	00.0	1.1	2.2	1.1	5.4	00.0	100.
12	15.2	7.6	3.3	3.3	4.3	3.3	5.4	9.8	18.5	13.0	3.3	00.0	2.2	2.2	1.1	7.6	00.0	100.
13	16.3	7.6	4.3	4.3	5.4	3.3	8.7	6.5	18.5	9.8	3.3	00.0	00.0	3.3	1.1	7.6	00.0	100.
14	17.4	4.3	3.3	6.5	3.3	5.4	12.0	7.6	15.2	8.7	3.3	1.1	00.0	2.2	3.3	6.5	00.0	100.
15	13.0	9.8	2.2	3.3	1.1	10.9	8.7	8.7	18.5	8.7	1.1	1.1	00.0	2.2	3.3	7.6	00.0	100.
16	15.2	6.5	3.3	3.3	4.3	8.7	10.9	7.6	13.0	15.2	1.1	1.1	1.1	3.3	2.2	3.3	00.0	100.
17	12.0	7.6	1.1	6.5	1.1	5.4	12.0	9.8	15.2	9.8	4.3	1.1	00.0	1.1	3.3	9.8	00.0	100.
18	10.9	9.8	3.3	2.2	3.3	3.3	12.0	18.5	12.0	5.4	3.3	1.1	3.3	00.0	3.3	8.7	00.0	100.
19	8.7	7.6	5.4	3.3	2.2	6.5	9.8	22.8	13.0	4.3	3.3	00.0	1.1	1.1	1.1	9.8	00.0	100.
20	7.6	6.5	12.0	2.2	4.3	6.5	9.8	28.3	9.8	1.1	2.2	00.0	1.1	00.0	1.1	7.6	00.0	100.
21	4.3	10.9	6.5	7.6	2.2	6.5	12.0	19.6	16.3	3.3	00.0	1.1	2.2	00.0	1.1	6.5	00.0	100.
22	4.3	9.8	6.5	6.5	2.2	5.4	14.1	19.6	16.3	3.3	1.1	1.1	1.1	1.1	2.2	5.4	00.0	100.
23	5.4	7.6	5.4	7.6	3.3	3.3	10.9	22.8	18.5	4.3	1.1	00.0	1.1	1.1	3.3	4.3	00.0	100.
24	5.4	10.9	2.2	8.7	3.3	6.5	5.4	20.7	18.5	8.7	3.3	00.0	00.0	1.1	2.2	3.3	00.0	100.
ALL	11.4	7.6	4.6	3.9	2.9	4.9	8.8	12.4	16.4	10.8	3.4	1.0	1.4	1.6	2.6	6.3	00.0	100.

NUMBER OF OBS = 2208

NPPD-COOPER NUCLEAR STATION 100-M WIND DIRECTION 2012

PROGRAM: WINPER
VERSION: PC-1.0

HOURLY WIND ROSES (PERCENT)

OCTOBER

WIND DIRECTION

HR. OF DAY	N	NNE	NE	ENE	E	ESE	SE	SSE	S	SSW	SW	WSW	W	WNW	NW	NNW	CALM	TOTAL
1	19.4	3.2	9.7	00.0	00.0	6.5	6.5	9.7	6.5	9.7	6.5	00.0	00.0	9.7	6.5	6.5	00.0	100.
2	9.7	3.2	6.5	00.0	00.0	3.2	9.7	9.7	00.0	9.7	9.7	3.2	6.5	6.5	16.1	6.5	00.0	100.
3	6.5	00.0	6.5	00.0	3.2	3.2	6.5	12.9	00.0	12.9	9.7	00.0	3.2	9.7	12.9	12.9	00.0	100.
4	6.5	00.0	6.5	00.0	00.0	3.2	6.5	9.7	6.5	16.1	6.5	00.0	3.2	9.7	9.7	16.1	00.0	100.
5	9.7	00.0	3.2	00.0	3.2	3.2	9.7	9.7	9.7	9.7	6.5	00.0	9.7	00.0	9.7	16.1	00.0	100.
6	3.2	3.2	3.2	3.2	00.0	6.5	6.5	12.9	9.7	9.7	3.2	3.2	9.7	00.0	6.5	19.4	00.0	100.
7	3.2	6.5	00.0	6.5	3.2	6.5	3.2	12.9	9.7	9.7	3.2	3.2	6.5	00.0	9.7	16.1	00.0	100.
8	3.2	3.2	00.0	6.5	00.0	6.5	6.5	16.1	6.5	6.5	6.5	6.5	3.2	00.0	12.9	16.1	00.0	100.
9	3.2	00.0	00.0	3.2	3.2	6.5	3.2	19.4	12.9	3.2	6.5	00.0	9.7	00.0	19.4	9.7	00.0	100.
10	9.7	00.0	00.0	3.2	3.2	3.2	6.5	12.9	12.9	6.5	00.0	9.7	6.5	3.2	12.9	9.7	00.0	100.
11	00.0	00.0	00.0	00.0	3.2	3.2	6.5	9.7	16.1	9.7	00.0	9.7	3.2	6.5	16.1	16.1	00.0	100.
12	6.5	00.0	00.0	00.0	3.2	3.2	6.5	12.9	9.7	6.5	3.2	12.9	3.2	6.5	12.9	12.9	00.0	100.
13	9.7	00.0	00.0	00.0	3.2	3.2	9.7	9.7	12.9	3.2	3.2	12.9	3.2	3.2	12.9	12.9	00.0	100.
14	6.5	00.0	00.0	00.0	3.2	3.2	9.7	9.7	9.7	9.7	3.2	6.5	3.2	3.2	9.7	22.6	00.0	100.
15	6.5	3.2	00.0	00.0	3.2	6.5	9.7	6.5	9.7	9.7	6.5	6.5	00.0	3.2	9.7	19.4	00.0	100.
16	6.5	00.0	3.2	3.2	00.0	3.2	6.5	12.9	6.5	12.9	6.5	3.2	00.0	3.2	9.7	22.6	00.0	100.
17	3.2	3.2	3.2	00.0	3.2	00.0	12.9	3.2	9.7	12.9	6.5	3.2	3.2	3.2	12.9	19.4	00.0	100.
18	00.0	3.2	3.2	00.0	00.0	00.0	16.1	12.9	3.2	12.9	6.5	3.2	00.0	3.2	16.1	19.4	00.0	100.
19	00.0	3.2	3.2	00.0	00.0	3.2	19.4	6.5	12.9	6.5	3.2	00.0	3.2	6.5	12.9	19.4	00.0	100.
20	00.0	6.5	00.0	00.0	00.0	6.5	16.1	3.2	19.4	00.0	6.5	00.0	3.2	00.0	12.9	25.8	00.0	100.
21	3.2	3.2	3.2	00.0	00.0	3.2	9.7	12.9	16.1	00.0	6.5	3.2	00.0	9.7	9.7	19.4	00.0	100.
22	3.2	6.5	00.0	3.2	00.0	3.2	12.9	12.9	12.9	00.0	6.5	3.2	3.2	6.5	6.5	19.4	00.0	100.
23	3.2	6.5	00.0	3.2	00.0	6.5	9.7	6.5	19.4	6.5	6.5	00.0	3.2	6.5	6.5	16.1	00.0	100.
24	12.9	3.2	6.5	00.0	00.0	6.5	9.7	9.7	9.7	12.9	6.5	00.0	00.0	9.7	3.2	9.7	00.0	100.
ALL	5.6	2.4	2.4	1.3	1.5	4.2	9.1	10.6	10.1	8.2	5.4	3.8	3.6	4.6	11.2	16.0	00.0	100.

NUMBER OF OBS = 744

NPPD-COOPER NUCLEAR STATION 100-M WIND DIRECTION 2012

PROGRAM: WINPER
VERSION: PC-1.0

HOURLY WIND ROSES (PERCENT)

NOVEMBER

WIND DIRECTION

HR. OF DAY	N	NNE	NE	ENE	E	ESE	SE	SSE	S	SSW	SW	WSW	W	WNW	NW	NNW	CALM	TOTAL
1	3.3	6.7	00.0	3.3	3.3	00.0	3.3	10.0	26.7	6.7	13.3	00.0	00.0	10.0	10.0	3.3	00.0	100.
2	00.0	6.7	3.3	3.3	00.0	00.0	6.7	10.0	30.0	3.3	10.0	3.3	3.3	3.3	13.3	3.3	00.0	100.
3	00.0	6.7	00.0	00.0	3.3	3.3	00.0	10.0	30.0	6.7	00.0	10.0	3.3	6.7	10.0	10.0	00.0	100.
4	00.0	6.7	00.0	00.0	3.3	00.0	3.3	10.0	30.0	6.7	00.0	6.7	6.7	00.0	16.7	10.0	00.0	100.
5	00.0	6.7	00.0	00.0	00.0	3.3	3.3	6.7	26.7	13.3	6.7	00.0	3.3	3.3	13.3	13.3	00.0	100.
6	3.3	6.7	00.0	00.0	00.0	3.3	3.3	13.3	20.0	16.7	3.3	00.0	3.3	3.3	13.3	10.0	00.0	100.
7	00.0	3.3	6.7	00.0	3.3	00.0	3.3	16.7	23.3	10.0	3.3	00.0	3.3	00.0	16.7	10.0	00.0	100.
8	3.3	6.7	00.0	3.3	00.0	3.3	00.0	23.3	16.7	10.0	3.3	6.7	00.0	00.0	6.7	16.7	00.0	100.
9	3.3	3.3	00.0	3.3	00.0	3.3	3.3	23.3	13.3	13.3	3.3	3.3	00.0	3.3	13.3	10.0	00.0	100.
10	6.7	3.3	00.0	00.0	00.0	10.0	00.0	13.3	23.3	10.0	3.3	00.0	6.7	00.0	10.0	13.3	00.0	100.
11	00.0	13.3	00.0	00.0	00.0	3.3	6.7	16.7	16.7	10.0	6.7	00.0	3.3	00.0	13.3	10.0	00.0	100.
12	6.7	10.0	00.0	00.0	3.3	00.0	6.7	13.3	20.0	6.7	3.3	00.0	6.7	00.0	16.7	6.7	00.0	100.
13	13.3	00.0	6.7	00.0	3.3	00.0	6.7	13.3	20.0	10.0	00.0	00.0	00.0	6.7	13.3	6.7	00.0	100.
14	13.3	00.0	00.0	00.0	6.7	10.0	3.3	10.0	23.3	6.7	00.0	3.3	00.0	3.3	13.3	6.7	00.0	100.
15	16.7	00.0	00.0	3.3	3.3	3.3	3.3	23.3	13.3	10.0	00.0	3.3	00.0	3.3	13.3	3.3	00.0	100.
16	10.0	3.3	3.3	00.0	3.3	6.7	00.0	26.7	13.3	10.0	00.0	00.0	3.3	3.3	13.3	3.3	00.0	100.
17	3.3	10.0	00.0	00.0	6.7	00.0	10.0	16.7	20.0	6.7	00.0	00.0	3.3	3.3	16.7	3.3	00.0	100.
18	3.3	10.0	3.3	00.0	00.0	3.3	13.3	16.7	20.0	3.3	00.0	3.3	00.0	3.3	16.7	3.3	00.0	100.
19	6.7	3.3	00.0	3.3	00.0	3.3	13.3	20.0	16.7	3.3	00.0	00.0	3.3	6.7	10.0	10.0	00.0	100.
20	3.3	10.0	00.0	3.3	00.0	3.3	10.0	23.3	16.7	3.3	00.0	00.0	00.0	10.0	10.0	6.7	00.0	100.
21	3.3	13.3	00.0	00.0	00.0	3.3	3.3	20.0	23.3	6.7	00.0	00.0	00.0	6.7	10.0	10.0	00.0	100.
22	3.3	6.7	10.0	00.0	00.0	3.3	3.3	13.3	23.3	6.7	3.3	00.0	3.3	6.7	6.7	10.0	00.0	100.
23	3.3	6.7	10.0	00.0	00.0	00.0	6.7	13.3	20.0	10.0	3.3	6.7	00.0	3.3	6.7	10.0	00.0	100.
24	6.7	6.7	00.0	6.7	3.3	00.0	6.7	13.3	23.3	6.7	6.7	00.0	3.3	3.3	6.7	6.7	00.0	100.
ALL	4.7	6.3	1.8	1.3	1.8	2.8	5.0	15.7	21.3	8.2	2.9	1.9	2.4	3.8	12.1	8.2	00.0	100.

NUMBER OF OBS = 720

NPPD-COOPER NUCLEAR STATION 100-M WIND DIRECTION 2012

PROGRAM: WINPER
VERSION: PC-1.0

HOURLY WIND ROSES (PERCENT)

DECEMBER

WIND DIRECTION

HR. OF DAY	N	NNE	NE	ENE	E	ESE	SE	SSE	S	SSW	SW	WSW	W	WNW	NW	NNW	CALM	TOTAL
1	3.2	9.7	3.2	00.0	6.5	3.2	12.9	6.5	12.9	3.2	00.0	6.5	00.0	9.7	12.9	9.7	00.0	100.
2	6.5	6.5	3.2	00.0	00.0	6.5	12.9	9.7	9.7	3.2	3.2	6.5	00.0	3.2	19.4	9.7	00.0	100.
3	12.9	3.2	00.0	00.0	00.0	12.9	00.0	16.1	12.9	00.0	3.2	00.0	6.5	3.2	16.1	12.9	00.0	100.
4	6.5	3.2	00.0	00.0	6.5	6.5	00.0	12.9	16.1	3.2	00.0	3.2	3.2	3.2	9.7	25.8	00.0	100.
5	9.7	3.2	00.0	00.0	6.5	6.5	00.0	12.9	16.1	3.2	00.0	3.2	3.2	6.5	16.1	12.9	00.0	100.
6	12.9	3.2	00.0	00.0	00.0	9.7	3.2	12.9	16.1	3.2	3.2	00.0	3.2	3.2	16.1	12.9	00.0	100.
7	12.9	6.5	00.0	00.0	3.2	6.5	3.2	9.7	12.9	6.5	3.2	3.2	00.0	9.7	6.5	16.1	00.0	100.
8	12.9	6.5	00.0	00.0	3.2	3.2	3.2	9.7	19.4	3.2	00.0	6.5	3.2	9.7	9.7	9.7	00.0	100.
9	3.2	6.5	3.2	3.2	3.2	00.0	3.2	6.5	12.9	12.9	00.0	3.2	6.5	9.7	16.1	9.7	00.0	100.
10	6.5	3.2	00.0	6.5	3.2	3.2	3.2	6.5	12.9	12.9	00.0	6.5	6.5	6.5	16.1	6.5	00.0	100.
11	3.2	6.5	00.0	3.2	6.5	6.5	00.0	3.2	16.1	9.7	3.2	6.5	3.2	6.5	12.9	12.9	00.0	100.
12	9.7	6.5	00.0	6.5	3.2	6.5	3.2	3.2	12.9	6.5	6.5	9.7	00.0	12.9	9.7	3.2	00.0	100.
13	3.3	3.3	00.0	3.3	00.0	10.0	00.0	10.0	6.7	10.0	3.3	10.0	6.7	13.3	6.7	13.3	00.0	100.
14	10.0	3.3	00.0	3.3	00.0	6.7	3.3	3.3	13.3	6.7	3.3	10.0	6.7	13.3	6.7	10.0	00.0	100.
15	6.5	9.7	00.0	3.2	3.2	3.2	6.5	3.2	16.1	00.0	6.5	3.2	9.7	12.9	6.5	9.7	00.0	100.
16	9.7	3.2	00.0	3.2	3.2	3.2	6.5	3.2	16.1	6.5	00.0	6.5	9.7	6.5	6.5	16.1	00.0	100.
17	12.9	3.2	00.0	3.2	3.2	3.2	6.5	3.2	9.7	9.7	3.2	6.5	6.5	3.2	12.9	12.9	00.0	100.
18	12.9	9.7	3.2	3.2	00.0	6.5	3.2	9.7	6.5	6.5	3.2	3.2	3.2	9.7	9.7	9.7	00.0	100.
19	6.5	12.9	9.7	3.2	00.0	6.5	6.5	6.5	3.2	9.7	00.0	6.5	3.2	6.5	6.5	12.9	00.0	100.
20	3.2	19.4	3.2	3.2	3.2	3.2	9.7	6.5	3.2	3.2	6.5	3.2	00.0	9.7	9.7	12.9	00.0	100.
21	9.7	12.9	3.2	6.5	00.0	6.5	3.2	12.9	6.5	3.2	00.0	00.0	9.7	6.5	6.5	12.9	00.0	100.
22	16.1	6.5	00.0	9.7	3.2	3.2	9.7	9.7	6.5	00.0	3.2	3.2	3.2	6.5	9.7	9.7	00.0	100.
23	6.5	12.9	00.0	6.5	3.2	3.2	12.9	9.7	6.5	3.2	00.0	00.0	9.7	3.2	6.5	16.1	00.0	100.
24	3.2	12.9	00.0	3.2	3.2	6.5	9.7	9.7	6.5	3.2	3.2	3.2	3.2	12.9	9.7	9.7	00.0	100.
ALL	8.4	7.3	1.2	3.0	2.7	5.5	5.1	8.2	11.3	5.4	2.3	4.6	4.4	7.8	10.8	12.0	00.0	100.

NUMBER OF OBS = 742

NPPD-COOPER NUCLEAR STATION 100-M WIND DIRECTION 2012

PROGRAM: WINPER
VERSION: PC-1.0

HOURLY WIND ROSES (PERCENT)

OCT-DEC

WIND DIRECTION

HR. OF DAY	N	NNE	NE	ENE	E	ESE	SE	SSE	S	SSW	SW	WSW	W	WNW	NW	NNW	CALM	TOTAL
1	8.7	6.5	4.3	1.1	3.3	3.3	7.6	8.7	15.2	6.5	6.5	2.2	00.0	9.8	9.8	6.5	00.0	100.
2	5.4	5.4	4.3	1.1	00.0	3.3	9.8	9.8	13.0	5.4	7.6	4.3	3.3	4.3	16.3	6.5	00.0	100.
3	6.5	3.3	2.2	00.0	2.2	6.5	2.2	13.0	14.1	6.5	4.3	3.3	4.3	6.5	13.0	12.0	00.0	100.
4	4.3	3.3	2.2	00.0	3.3	3.3	3.3	10.9	17.4	8.7	2.2	3.3	4.3	4.3	12.0	17.4	00.0	100.
5	6.5	3.3	1.1	00.0	3.3	4.3	4.3	9.8	17.4	8.7	4.3	1.1	5.4	3.3	13.0	14.1	00.0	100.
6	6.5	4.3	1.1	1.1	00.0	6.5	4.3	13.0	15.2	9.8	3.3	1.1	5.4	2.2	12.0	14.1	00.0	100.
7	5.4	5.4	2.2	2.2	3.3	4.3	3.3	13.0	15.2	8.7	3.3	2.2	3.3	3.3	10.9	14.1	00.0	100.
8	6.5	5.4	00.0	3.3	1.1	4.3	3.3	16.3	14.1	6.5	3.3	6.5	2.2	3.3	9.8	14.1	00.0	100.
9	3.3	3.3	1.1	3.3	2.2	3.3	3.3	16.3	13.0	9.8	3.3	2.2	5.4	4.3	16.3	9.8	00.0	100.
10	7.6	2.2	00.0	3.3	2.2	5.4	3.3	10.9	16.3	9.8	1.1	5.4	6.5	3.3	13.0	9.8	00.0	100.
11	1.1	6.5	00.0	1.1	3.3	4.3	4.3	9.8	16.3	9.8	3.3	5.4	3.3	4.3	14.1	13.0	00.0	100.
12	7.6	5.4	00.0	2.2	3.3	3.3	5.4	9.8	14.1	6.5	4.3	7.6	3.3	6.5	13.0	7.6	00.0	100.
13	8.8	1.1	2.2	1.1	2.2	4.4	5.5	11.0	13.2	7.7	2.2	7.7	3.3	7.7	11.0	11.0	00.0	100.
14	9.9	1.1	00.0	1.1	3.3	6.6	5.5	7.7	15.4	7.7	2.2	6.6	3.3	6.6	9.9	13.2	00.0	100.
15	9.8	4.3	00.0	2.2	3.3	4.3	6.5	10.9	13.0	6.5	4.3	4.3	3.3	6.5	9.8	10.9	00.0	100.
16	8.7	2.2	2.2	2.2	2.2	4.3	4.3	14.1	12.0	9.8	2.2	3.3	4.3	4.3	9.8	14.1	00.0	100.
17	6.5	5.4	1.1	1.1	4.3	1.1	9.8	7.6	13.0	9.8	3.3	3.3	4.3	3.3	14.1	12.0	00.0	100.
18	5.4	7.6	3.3	1.1	00.0	3.3	10.9	13.0	9.8	7.6	3.3	3.3	1.1	5.4	14.1	10.9	00.0	100.
19	4.3	6.5	4.3	2.2	00.0	4.3	13.0	10.9	10.9	6.5	1.1	2.2	3.3	6.5	9.8	14.1	00.0	100.
20	2.2	12.0	1.1	2.2	1.1	4.3	12.0	10.9	13.0	2.2	4.3	1.1	1.1	6.5	10.9	15.2	00.0	100.
21	5.4	9.8	2.2	2.2	00.0	4.3	5.4	15.2	15.2	3.3	2.2	1.1	3.3	7.6	8.7	14.1	00.0	100.
22	7.6	6.5	3.3	4.3	1.1	3.3	8.7	12.0	14.1	2.2	4.3	2.2	3.3	6.5	7.6	13.0	00.0	100.
23	4.3	8.7	3.3	3.3	1.1	3.3	9.8	9.8	15.2	6.5	3.3	2.2	4.3	4.3	6.5	14.1	00.0	100.
24	7.6	7.6	2.2	3.3	2.2	4.3	8.7	10.9	13.0	7.6	5.4	1.1	2.2	8.7	6.5	8.7	00.0	100.
ALL	6.3	5.3	1.8	1.9	2.0	4.2	6.4	11.5	14.1	7.3	3.5	3.4	3.5	5.4	11.3	12.1	00.0	100.

NUMBER OF OBS = 2206

NPPD-COOPER NUCLEAR STATION 100-M WIND DIRECTION 2012

PROGRAM: WINPER
VERSION: PC-1.0

HOURLY WIND ROSES (PERCENT)

JUL-DEC

WIND DIRECTION

HR. OF DAY	N	NNE	NE	ENE	E	ESE	SE	SSE	S	SSW	SW	WSW	W	WNW	NW	NNW	CALM	TOTAL
1	8.2	9.8	3.8	2.2	4.9	3.8	6.5	10.9	18.5	10.9	3.8	1.1	.5	5.4	6.0	3.8	00.0	100.
2	6.5	8.2	5.4	1.6	1.6	3.3	8.2	10.9	17.4	10.3	4.9	2.7	2.7	2.7	9.8	3.8	00.0	100.
3	8.7	5.4	2.7	2.2	2.7	4.9	3.3	11.4	17.4	10.3	5.4	2.2	2.7	3.8	8.7	8.2	00.0	100.
4	8.7	2.7	5.4	.5	2.2	4.9	4.3	8.7	19.0	10.9	4.3	2.7	3.8	2.7	7.1	12.0	00.0	100.
5	9.8	3.3	3.8	1.1	2.2	3.8	4.9	10.9	16.8	11.4	5.4	1.1	3.8	3.8	7.6	10.3	00.0	100.
6	9.2	7.1	1.1	1.6	1.1	6.0	4.9	10.3	16.3	12.0	3.3	1.6	3.8	2.7	8.2	10.9	00.0	100.
7	8.2	6.0	2.7	3.3	3.8	3.8	4.3	12.0	14.7	12.5	2.2	1.6	3.3	2.2	7.6	12.0	00.0	100.
8	8.7	6.0	2.7	2.2	.5	4.3	9.2	10.3	15.2	8.2	4.9	4.9	2.2	2.2	7.1	11.4	00.0	100.
9	10.3	3.3	3.3	3.3	2.2	2.7	8.2	10.9	12.5	12.5	4.9	2.2	3.3	2.2	9.8	8.7	00.0	100.
10	12.0	4.3	2.7	3.3	1.6	4.9	4.9	8.2	16.3	13.0	3.3	3.3	4.3	3.3	8.2	6.5	00.0	100.
11	9.2	6.0	1.6	1.6	3.8	3.8	5.4	8.7	15.2	14.7	4.9	2.7	2.2	3.3	7.6	9.2	00.0	100.
12	11.4	6.5	1.6	2.7	3.8	3.3	5.4	9.8	16.3	9.8	3.8	3.8	2.7	4.3	7.1	7.6	00.0	100.
13	12.6	4.4	3.3	2.7	3.8	3.8	7.1	8.7	15.8	8.7	2.7	3.8	1.6	5.5	6.0	9.3	00.0	100.
14	13.7	2.7	1.6	3.8	3.3	6.0	8.7	7.7	15.3	8.2	2.7	3.8	1.6	4.4	6.6	9.8	00.0	100.
15	11.4	7.1	1.1	2.7	2.2	7.6	7.6	9.8	15.8	7.6	2.7	2.7	1.6	4.3	6.5	9.2	00.0	100.
16	12.0	4.3	2.7	2.7	3.3	6.5	7.6	10.9	12.5	12.5	1.6	2.2	2.7	3.8	6.0	8.7	00.0	100.
17	9.2	6.5	1.1	3.8	2.7	3.3	10.9	8.7	14.1	9.8	3.8	2.2	2.2	2.2	8.7	10.9	00.0	100.
18	8.2	8.7	3.3	1.6	1.6	3.3	11.4	15.8	10.9	6.5	3.3	2.2	2.2	2.7	8.7	9.8	00.0	100.
19	6.5	7.1	4.9	2.7	1.1	5.4	11.4	16.8	12.0	5.4	2.2	1.1	2.2	3.8	5.4	12.0	00.0	100.
20	4.9	9.2	6.5	2.2	2.7	5.4	10.9	19.6	11.4	1.6	3.3	.5	1.1	3.3	6.0	11.4	00.0	100.
21	4.9	10.3	4.3	4.9	1.1	5.4	8.7	17.4	15.8	3.3	1.1	1.1	2.7	3.8	4.9	10.3	00.0	100.
22	6.0	8.2	4.9	5.4	1.6	4.3	11.4	15.8	15.2	2.7	2.7	1.6	2.2	3.8	4.9	9.2	00.0	100.
23	4.9	8.2	4.3	5.4	2.2	3.3	10.3	16.3	16.8	5.4	2.2	1.1	2.7	2.7	4.9	9.2	00.0	100.
24	6.5	9.2	2.2	6.0	2.7	5.4	7.1	15.8	15.8	8.2	4.3	.5	1.1	4.9	4.3	6.0	00.0	100.
ALL	8.8	6.4	3.2	2.9	2.4	4.6	7.6	11.9	15.3	9.0	3.5	2.2	2.5	3.5	7.0	9.2	00.0	100.

NUMBER OF OBS = 4414

NPPD-COOPER NUCLEAR STATION 100-M WIND DIRECTION 2012

PROGRAM: WINPER
VERSION: PC-1.0

HOURLY WIND ROSES (PERCENT)

JAN-DEC

WIND DIRECTION

HR. OF DAY	N	NNE	NE	ENE	E	ESE	SE	SSE	S	SSW	SW	WSW	W	WNW	NW	NNW	CALM	TOTAL
1	8.2	7.1	3.0	2.2	3.3	4.4	8.7	11.2	15.3	10.4	4.6	2.2	2.2	5.5	5.2	6.6	00.0	100.
2	7.1	6.3	4.1	2.5	1.6	3.6	8.2	11.2	15.3	10.9	5.2	2.7	3.6	3.8	8.5	5.5	00.0	100.
3	6.6	6.0	2.2	2.7	2.2	4.1	5.7	10.9	16.4	9.6	6.8	2.5	3.0	4.1	8.5	8.7	00.0	100.
4	7.4	3.6	3.6	1.6	2.2	5.5	4.4	11.2	17.5	7.9	6.3	3.0	2.7	4.9	8.5	9.8	00.0	100.
5	7.4	3.8	2.7	1.1	2.7	4.6	6.3	11.5	15.8	9.6	5.2	1.9	4.1	5.2	9.8	8.2	00.0	100.
6	8.5	5.5	1.4	1.6	1.9	5.5	7.1	10.7	16.1	9.3	4.6	2.5	4.1	4.4	8.5	8.5	00.0	100.
7	6.8	5.5	3.0	2.7	3.0	3.6	6.6	13.7	14.8	9.8	2.7	3.6	3.6	3.8	8.2	8.7	00.0	100.
8	6.0	6.0	2.7	3.0	1.1	3.8	9.6	10.9	15.6	7.9	5.5	3.6	2.7	4.1	8.5	9.0	00.0	100.
9	8.7	3.3	3.0	3.0	3.0	3.0	9.3	9.3	13.7	12.3	4.4	2.5	2.7	4.6	10.4	6.8	00.0	100.
10	8.2	4.4	2.7	3.6	2.2	5.5	5.2	9.3	15.0	11.7	4.9	3.0	3.3	4.9	7.4	8.7	00.0	100.
11	8.5	4.4	2.2	2.2	3.6	3.6	7.4	9.6	14.5	11.5	6.0	3.8	2.5	3.0	8.7	8.7	00.0	100.
12	10.4	4.1	2.5	2.2	3.6	3.8	6.6	9.8	15.0	9.6	5.7	3.6	2.7	4.1	8.5	7.9	00.0	100.
13	11.2	4.7	2.5	2.2	3.8	4.1	7.9	7.7	16.4	7.4	5.2	3.6	2.2	5.2	8.2	7.7	00.0	100.
14	12.1	3.0	1.6	3.3	3.3	4.4	9.0	7.7	16.2	7.4	3.0	4.9	2.7	4.1	7.9	9.3	00.0	100.
15	10.1	5.5	1.4	2.7	2.2	6.6	7.4	7.9	16.9	7.7	3.6	3.3	3.6	4.9	7.1	9.3	00.0	100.
16	11.7	2.7	2.5	2.5	3.6	5.5	7.7	8.5	14.5	8.7	4.6	3.0	3.6	4.9	6.8	9.3	00.0	100.
17	9.6	4.6	1.6	3.6	3.8	2.7	8.7	8.2	15.6	7.4	5.2	3.3	2.2	3.0	9.3	11.2	00.0	100.
18	7.1	6.3	3.0	1.9	3.6	3.0	9.0	11.5	13.1	6.6	4.6	2.5	2.7	3.3	9.0	12.8	00.0	100.
19	8.2	6.0	4.6	2.7	2.7	4.9	9.0	12.8	13.7	5.7	4.1	1.6	2.7	3.6	6.6	10.9	00.0	100.
20	6.6	7.7	4.1	3.6	3.6	4.9	9.6	15.6	12.3	3.6	4.6	1.9	1.9	3.0	6.8	10.4	00.0	100.
21	7.7	7.1	3.3	3.8	3.8	4.9	9.0	14.2	15.6	4.4	3.0	2.2	2.5	3.0	5.7	9.8	00.0	100.
22	7.7	6.0	4.9	4.1	3.6	3.6	11.2	12.3	15.6	4.4	3.6	3.0	2.5	3.0	5.7	9.0	00.0	100.
23	6.3	5.7	4.6	3.6	3.0	4.9	8.7	13.7	17.2	6.0	3.6	1.1	3.8	2.2	6.3	9.3	00.0	100.
24	7.1	6.6	3.0	4.1	3.6	4.9	8.2	13.1	15.0	8.5	5.7	1.6	2.5	3.3	5.5	7.4	00.0	100.
ALL	8.3	5.2	2.9	2.8	2.9	4.4	7.9	10.9	15.3	8.3	4.7	2.8	2.9	4.0	7.7	8.9	00.0	100.

NUMBER OF OBS = 8782

Precipitation

NPPD-COOPER NUCLEAR STATION PRECIPITATION DATA FOR 2012 RAIN VERSION PC-1.0

YR	MON	DAY	1AM 1PM	2AM 2PM	3AM 3PM	4AM 4PM	5AM 5PM	6AM 6PM	7AM 7PM	8AM 8PM	9AM 9PM	10AM 10PM	11AM 11PM	12N 12MDNT	TOTAL
12	1	1	.00	.00	.00	.00	.00	.00	.00	.00	.00	.00	.00	.00	
			.00	.00	.00	.00	.00	.00	.00	.00	.00	.00	.00	.00	.00
12	1	2	.00	.00	.00	.00	.00	.00	.00	.00	.00	.00	.00	.00	
			.00	.00	.00	.00	.00	.00	.00	.00	.00	.00	.00	.00	.00
12	1	3	.00	.00	.00	.00	.00	.00	.00	.00	.00	.00	.00	.00	
			.00	.00	.00	.00	.00	.00	.00	.00	.00	.00	.00	.00	.00
12	1	4	.00	.00	.00	.00	.00	.00	.00	.00	.00	.00	.00	.00	
			.00	.00	.00	.00	.00	.00	.00	.00	.00	.00	.00	.00	.00
12	1	5	.00	.00	.00	.00	.00	.00	.00	.00	.00	.00	.00	.00	
			.00	.00	.00	.00	.00	.00	.00	.00	.00	.00	.00	.00	.00
12	1	6	.00	.00	.00	.00	.00	.00	.00	.00	.00	.00	.00	.00	
			.00	.00	.00	.00	.00	.00	.00	.00	.00	.00	.00	.00	.00
12	1	7	.00	.00	.00	.00	.00	.00	.00	.00	.00	.00	.00	.00	
			.00	.00	.00	.00	.00	.00	.00	.00	.00	.00	.00	.00	.00
12	1	8	.00	.00	.00	.00	.00	.00	.00	.00	.00	.00	.00	.00	
			.00	.00	.00	.00	.00	.00	.00	.00	.00	.00	.00	.00	.00
12	1	9	.00	.00	.00	.00	.00	.00	.00	.00	.00	.00	.00	.00	
			.00	.00	.00	.00	.00	.00	.00	.00	.00	.00	.00	.00	.00
12	1	10	.00	.00	.00	.00	.00	.00	.00	.00	.00	.00	.00	.00	
			.00	.00	.00	.00	.00	.00	.00	.00	.00	.00	.00	.00	.00
12	1	11	.00	.00	.00	.00	.00	.00	.00	.00	.00	.00	.00	.00	
			.00	.00	.00	.00	.00	.00	.00	.00	.00	.00	.00	.00	.00
12	1	12	.00	.00	.00	.00	.00	.00	.00	.00	.00	.00	.00	.00	
			.00	.00	.00	.00	.00	.00	.00	.00	.00	.00	.00	.00	.00
12	1	13	.00	.00	.00	.00	.00	.00	.00	.00	.00	.00	.00	.00	
			.00	.00	.00	.00	.00	.00	.00	.00	.00	.00	.00	.00	.00
12	1	14	.00	.00	.00	.00	.00	.00	.00	.00	.00	.00	.00	.00	
			.00	.00	.00	.00	.00	.00	.00	.00	.00	.00	.00	.00	.00
12	1	15	.00	.00	.00	.00	.00	.00	.00	.00	.00	.00	.00	.00	
			.00	.00	.00	.00	.00	.00	.00	.00	.00	.00	.00	.00	.00
12	1	16	.00	.00	.00	.00	.00	.00	.00	.00	.00	.00	.00	.00	
			.00	.00	.00	.00	.00	.00	.00	.00	.00	.00	.00	.00	.00
12	1	17	.00	.01	.02	.01	.00	.00	.00	.00	.00	.00	.00	.00	
			.00	.00	.00	.00	.00	.00	.00	.00	.00	.00	.00	.00	.04

NPPD-COOPER NUCLEAR STATION PRECIPITATION DATA FOR 2012 RAIN VERSION PC-1.0

YR	MON	DAY	1AM 1PM	2AM 2PM	3AM 3PM	4AM 4PM	5AM 5PM	6AM 6PM	7AM 7PM	8AM 8PM	9AM 9PM	10AM 10PM	11AM 11PM	12N 12MDNT	TOTAL
12	1	18	.00	.00	.00	.00	.00	.00	.00	.00	.00	.00	.00	.00	
			.00	.00	.00	.00	.00	.00	.00	.00	.00	.00	.00	.00	.00
12	1	19	.00	.00	.00	.00	.00	.00	.00	.00	.00	.00	.00	.00	
			.00	.00	.00	.00	.00	.00	.00	.00	.00	.00	.00	.00	.00
12	1	20	.00	.00	.00	.00	.00	.00	.00	.00	.00	.00	.00	.00	
			.00	.00	.00	.00	.00	.00	.00	.00	.00	.00	.00	.00	.00
12	1	21	.00	.00	.00	.00	.00	.00	.00	.00	.00	.00	.00	.00	
			.00	.00	.00	.00	.00	.00	.00	.00	.00	.00	.00	.00	.00
12	1	22	.00	.00	.00	.00	.00	.00	.00	.00	.00	.00	.00	.00	
			.00	.00	.00	.00	.00	.00	.00	.00	.00	.00	.00	.00	.00
12	1	23	.00	.00	.00	.00	.00	.00	.00	.00	.00	.00	.00	.00	
			.00	.00	.00	.00	.00	.00	.00	.00	.00	.00	.00	.00	.00
12	1	24	.00	.00	.00	.00	.00	.00	.00	.00	.00	.00	.00	.00	
			.00	.00	.00	.00	.00	.00	.00	.00	.00	.00	.00	.00	.00
12	1	25	.00	.00	.00	.00	.00	.00	.00	.00	.00	.00	.00	.00	
			.00	.00	.00	.00	.00	.00	.00	.00	.00	.00	.00	.00	.00
12	1	26	.00	.00	.00	.00	.00	.00	.00	.00	.00	.00	.00	.00	
			.00	.00	.00	.00	.00	.00	.00	.00	.00	.00	.00	.00	.00
12	1	27	.00	.00	.00	.00	.00	.00	.00	.00	.00	.00	.00	.00	
			.00	.00	.00	.00	.00	.00	.00	.00	.00	.00	.00	.00	.00
12	1	28	.00	.00	.00	.00	.00	.00	.00	.00	.00	.00	.00	.00	
			.00	.00	.00	.00	.00	.00	.00	.00	.00	.00	.00	.00	.00
12	1	29	.00	.00	.00	.00	.00	.00	.00	.00	.00	.00	.00	.00	
			.00	.00	.00	.00	.00	.00	.00	.00	.00	.00	.00	.00	.00
12	1	30	.00	.00	.00	.00	.00	.00	.00	.00	.00	.00	.00	.00	
			.00	.00	.00	.00	.00	.00	.00	.00	.00	.00	.00	.00	.00
12	1	31	.00	.00	.00	.00	.00	.00	.00	.00	.00	.00	.00	.00	
			.00	.00	.00	.00	.00	.00	.00	.00	.00	.00	.00	.00	.00

NPPD-COOPER NUCLEAR STATION PRECIPITATION DATA FOR 2012 RAIN VERSION PC-1.0

MONTH OF JANUARY

FOR ALL TEMPERATURES

TOTAL NUMBER OF HOURS - 744
NUMBER OF MISSING HOURS - 0
TOTAL HOURS OF PRECIPITATION - 3
TOTAL DAYS WITH PRECIPITATION - 1
TOTAL AMOUNT OF PRECIPITATION - .04 INCHES
MAXIMUM 1-HOUR PRECIPITATION - .02 INCHES
MAXIMUM DAILY PRECIPITATION - .04 INCHES

1 HOUR PERIOD IN MONTH WITH GREATEST AMOUNT PRECIPITATION STARTS DAY 17 HOUR 3 - .02 INCHES
6 HOUR PERIOD IN MONTH WITH GREATEST AMOUNT PRECIPITATION STARTS DAY 17 HOUR 2 - .04 INCHES
12 HOUR PERIOD IN MONTH WITH GREATEST AMOUNT PRECIPITATION STARTS DAY 17 HOUR 2 - .04 INCHES
18 HOUR PERIOD IN MONTH WITH GREATEST AMOUNT PRECIPITATION STARTS DAY 17 HOUR 2 - .04 INCHES
24 HOUR PERIOD IN MONTH WITH GREATEST AMOUNT PRECIPITATION STARTS DAY 17 HOUR 2 - .04 INCHES

FOR TEMPERATURES LESS THAN OR EQUAL TO 32 DEGREES

TOTAL NUMBER OF HOURS - 328
NUMBER OF MISSING HOURS - 0
TOTAL HOURS OF PRECIPITATION - 3
TOTAL DAYS WITH PRECIPITATION - 1
TOTAL AMOUNT OF PRECIPITATION - .04 INCHES
MAXIMUM 1-HOUR PRECIPITATION - .02 INCHES
MAXIMUM DAILY PRECIPITATION - .04 INCHES

NPPD-COOPER NUCLEAR STATION PRECIPITATION DATA FOR 2012 RAIN VERSION PC-1.0

MONTH OF JANUARY

PRECIPITATION INTENSITY - DURATION
(NUMBER OF OCCURRENCES)

AMOUNT INCHES	DURATION (HOURS) 1	6	12	18	24
.01	3	8	14	20	26
.02	1	6	12	18	24
.03	0	6	12	18	24
.04	0	4	10	16	22
.05	0	0	0	0	0
.07	0	0	0	0	0
.10	0	0	0	0	0
.15	0	0	0	0	0
.20	0	0	0	0	0
.25	0	0	0	0	0
.30	0	0	0	0	0
.35	0	0	0	0	0
.40	0	0	0	0	0
.45	0	0	0	0	0
.50	0	0	0	0	0
.60	0	0	0	0	0
.70	0	0	0	0	0
.80	0	0	0	0	0
.90	0	0	0	0	0
1.00	0	0	0	0	0
1.10	0	0	0	0	0
1.20	0	0	0	0	0
1.30	0	0	0	0	0
1.40	0	0	0	0	0
1.50	0	0	0	0	0
1.60	0	0	0	0	0
1.70	0	0	0	0	0
1.80	0	0	0	0	0
1.90	0	0	0	0	0
2.00	0	0	0	0	0

ENTRIES INDICATE NUMBER OF DURATION PERIODS WITH RAINFALL GREATER THAN OR EQUAL TO AMOUNT SHOWN

NPPD-COOPER NUCLEAR STATION PRECIPITATION DATA FOR 2012 RAIN VERSION PC-1.0

YR	MON	DAY	1AM 1PM	2AM 2PM	3AM 3PM	4AM 4PM	5AM 5PM	6AM 6PM	7AM 7PM	8AM 8PM	9AM 9PM	10AM 10PM	11AM 11PM	12N 12MDNT	TOTAL
12	2	1	.00	.00	.00	.00	.00	.00	.00	.00	.00	.00	.00	.00	
			.00	.00	.00	.00	.00	.00	.00	.00	.00	.00	.00	.00	.00
12	2	2	.00	.00	.00	.00	.00	.00	.00	.00	.00	.00	.00	.00	
			.00	.00	.00	.00	.00	.00	.00	.00	.00	.00	.00	.00	.00
12	2	3	.00	.00	.00	.00	.00	.19	.26	.41	.14	.02	.00	.00	
			.00	.00	.00	.00	.00	.00	.00	.00	.00	.00	.00	.01	1.03
12	2	4	.07	.06	.04	.04	.05	.05	.03	.01	.03	.03	.00	.01	
			.01	.01	.01	.03	.01	.02	.03	.03	.02	.01	.01	.00	.61
12	2	5	.00	.00	.00	.00	.00	.00	.00	.00	.00	.00	.00	.00	
			.00	.00	.00	.00	.00	.00	.00	.00	.00	.00	.00	.00	.00
12	2	6	.00	.00	.00	.00	.00	.00	.00	.00	.00	.00	.00	.00	
			.00	.00	.00	.00	.00	.00	.00	.00	.00	.00	.00	.00	.00
12	2	7	.00	.00	.00	.00	.00	.00	.00	.00	.00	.00	.00	.00	
			.00	.00	.00	.00	.00	.00	.00	.00	.00	.00	.00	.00	.00
12	2	8	.00	.00	.00	.00	.00	.00	.00	.00	.00	.00	.00	.00	
			.00	.00	.00	.00	.00	.00	.00	.00	.00	.00	.00	.00	.00
12	2	9	.00	.00	.00	.00	.00	.00	.00	.00	.00	.00	.00	.00	
			.00	.00	.00	.00	.00	.00	.00	.00	.00	.00	.00	.00	.00
12	2	10	.00	.00	.00	.00	.00	.00	.00	.00	.00	.00	.00	.00	
			.00	.00	.00	.00	.00	.00	.00	.00	.00	.00	.00	.00	.00
12	2	11	.00	.00	.00	.00	.00	.00	.00	.00	.00	.00	.00	.00	
			.00	.00	.00	.00	.00	.00	.00	.00	.00	.00	.00	.00	.00
12	2	12	.00	.00	.00	.00	.00	.00	.00	.00	.00	.00	.00	.00	
			.00	.00	.00	.00	.00	.00	.00	.00	.00	.00	.00	.00	.00
12	2	13	.00	.00	.00	.01	.00	.01	.00	.00	.00	.00	.00	.00	
			.00	.00	.00	.00	.00	.00	.00	.00	.00	.00	.00	.00	.02
12	2	14	.00	.00	.00	.00	.00	.00	.00	.00	.00	.00	.00	.00	
			.00	.00	.00	.00	.00	.00	.00	.00	.00	.00	.00	.00	.00
12	2	15	.00	.00	.00	.00	.00	.00	.00	.00	.00	.00	.00	.00	
			.00	.00	.00	.00	.00	.00	.00	.00	.00	.00	.00	.00	.00
12	2	16	.00	.00	.00	.00	.00	.00	.00	.00	.00	.00	.00	.00	
			.00	.00	.00	.00	.00	.00	.00	.00	.00	.00	.00	.00	.00
12	2	17	.00	.00	.00	.00	.00	.00	.00	.00	.00	.00	.00	.00	
			.00	.00	.00	.00	.00	.00	.00	.00	.00	.00	.00	.00	.00

NPPD-COOPER NUCLEAR STATION PRECIPITATION DATA FOR 2012 RAIN VERSION PC-1.0

YR	MON	DAY	1AM 1PM	2AM 2PM	3AM 3PM	4AM 4PM	5AM 5PM	6AM 6PM	7AM 7PM	8AM 8PM	9AM 9PM	10AM 10PM	11AM 11PM	12N 12MDNT	TOTAL
12	2	18	.00	.00	.00	.00	.00	.00	.00	.00	.00	.00	.00	.00	
			.00	.00	.00	.00	.00	.00	.00	.00	.00	.00	.00	.00	.00
12	2	19	.00	.00	.00	.00	.00	.00	.00	.00	.00	.00	.00	.00	
			.00	.00	.00	.00	.00	.00	.00	.00	.00	.00	.00	.00	.00
12	2	20	.00	.00	.00	.00	.00	.00	.00	.00	.00	.00	.00	.00	
			.02	.00	.06	.02	.02	.00	.02	.00	.00	.00	.00	.00	.14
12	2	21	.00	.00	.00	.00	.00	.00	.00	.00	.00	.00	.00	.00	
			.00	.00	.00	.00	.00	.00	.00	.00	.00	.00	.00	.00	.00
12	2	22	.00	.00	.00	.00	.00	.00	.00	.00	.00	.00	.00	.00	
			.00	.00	.00	.00	.00	.00	.00	.00	.00	.00	.00	.00	.00
12	2	23	.00	.00	.00	.00	.00	.00	.00	.00	.00	.00	.00	.00	
			.00	.00	.00	.00	.00	.00	.00	.00	.00	.00	.00	.00	.00
12	2	24	.00	.00	.00	.00	.00	.00	.00	.00	.00	.00	.00	.00	
			.00	.00	.00	.00	.00	.00	.00	.00	.00	.00	.00	.00	.00
12	2	25	.00	.00	.00	.00	.00	.00	.00	.00	.00	.00	.00	.00	
			.00	.00	.00	.00	.00	.00	.00	.00	.00	.00	.00	.00	.00
12	2	26	.00	.00	.00	.00	.00	.00	.00	.00	.00	.00	.00	.00	
			.00	.00	.00	.00	.00	.00	.00	.00	.00	.00	.00	.00	.00
12	2	27	.00	.00	.00	.00	.00	.00	.00	.00	.00	.00	.00	.00	
			.00	.00	.00	.00	.00	.00	.00	.00	.00	.00	.00	.00	.00
12	2	28	.00	.00	.00	.00	.00	.00	.00	.01	.03	.01	.00	.00	
			.00	.02	.00	.00	.00	.00	.00	.00	.02	.17	.13	.00	.39
12	2	29	.00	.00	.00	.00	.00	.00	.00	.00	.00	.00	.00	.00	
			.00	.00	.00	.00	.00	.00	.00	.00	.00	.00	.00	.00	.00

NPPD-COOPER NUCLEAR STATION PRECIPITATION DATA FOR 2012 RAIN VERSION PC-1.0

MONTH OF FEBRUARY

FOR ALL TEMPERATURES

TOTAL NUMBER OF HOURS - 696
NUMBER OF MISSING HOURS - 0
TOTAL HOURS OF PRECIPITATION - 42
TOTAL DAYS WITH PRECIPITATION - 5
TOTAL AMOUNT OF PRECIPITATION - 2.19 INCHES
MAXIMUM 1-HOUR PRECIPITATION - .41 INCHES
MAXIMUM DAILY PRECIPITATION - 1.03 INCHES

1 HOUR PERIOD IN MONTH WITH GREATEST AMOUNT PRECIPITATION STARTS DAY 3 HOUR 8 - .41 INCHES
6 HOUR PERIOD IN MONTH WITH GREATEST AMOUNT PRECIPITATION STARTS DAY 3 HOUR 6 - 1.02 INCHES
12 HOUR PERIOD IN MONTH WITH GREATEST AMOUNT PRECIPITATION STARTS DAY 3 HOUR 6 - 1.02 INCHES
18 HOUR PERIOD IN MONTH WITH GREATEST AMOUNT PRECIPITATION STARTS DAY 3 HOUR 6 - 1.02 INCHES
24 HOUR PERIOD IN MONTH WITH GREATEST AMOUNT PRECIPITATION STARTS DAY 3 HOUR 6 - 1.29 INCHES

FOR TEMPERATURES LESS THAN OR EQUAL TO 32 DEGREES

TOTAL NUMBER OF HOURS - 227
NUMBER OF MISSING HOURS - 0
TOTAL HOURS OF PRECIPITATION - 2
TOTAL DAYS WITH PRECIPITATION - 1
TOTAL AMOUNT OF PRECIPITATION - .02 INCHES
MAXIMUM 1-HOUR PRECIPITATION - .01 INCHES
MAXIMUM DAILY PRECIPITATION - .02 INCHES

NPPD-COOPER NUCLEAR STATION PRECIPITATION DATA FOR 2012 RAIN VERSION PC-1.0

MONTH OF FEBRUARY

PRECIPITATION INTENSITY - DURATION
(NUMBER OF OCCURRENCES)

AMOUNT INCHES	DURATION (HOURS) 1	6	12	18	24
.01	42	79	110	136	160
.02	29	72	103	130	154
.03	20	57	87	109	127
.04	13	56	87	109	127
.05	11	53	84	106	124
.07	7	47	77	101	119
.10	6	38	68	91	109
.15	4	24	52	70	82
.20	2	19	44	65	77
.25	2	15	36	60	74
.30	1	13	33	56	71
.35	1	7	20	41	58
.40	1	7	16	31	46
.45	0	7	13	25	39
.50	0	6	12	20	34
.60	0	5	11	18	28
.70	0	5	11	17	24
.80	0	5	11	17	24
.90	0	3	9	15	23
1.00	0	3	9	15	22
1.10	0	0	0	0	6
1.20	0	0	0	0	3
1.30	0	0	0	0	0
1.40	0	0	0	0	0
1.50	0	0	0	0	0
1.60	0	0	0	0	0
1.70	0	0	0	0	0
1.80	0	0	0	0	0
1.90	0	0	0	0	0
2.00	0	0	0	0	0

ENTRIES INDICATE NUMBER OF DURATION PERIODS WITH RAINFALL GREATER THAN OR EQUAL TO AMOUNT SHOWN

NPPD-COOPER NUCLEAR STATION PRECIPITATION DATA FOR 2012 RAIN VERSION PC-1.0

YR	MON	DAY	1AM 1PM	2AM 2PM	3AM 3PM	4AM 4PM	5AM 5PM	6AM 6PM	7AM 7PM	8AM 8PM	9AM 9PM	10AM 10PM	11AM 11PM	12N 12MDNT	TOTAL
12	3	1	.00	.00	.00	.00	.00	.00	.00	.00	.00	.00	.00	.00	
			.00	.00	.00	.00	.00	.00	.00	.00	.00	.00	.00	.00	.00
12	3	2	.00	.00	.00	.00	.00	.00	.00	.00	.00	.00	.00	.00	
			.00	.00	.00	.00	.00	.00	.00	.00	.00	.00	.00	.00	.00
12	3	3	.00	.00	.00	.00	.00	.00	.00	.00	.00	.00	.00	.00	
			.00	.00	.00	.00	.00	.00	.00	.00	.00	.00	.00	.00	.00
12	3	4	.00	.00	.00	.00	.00	.00	.00	.00	.00	.00	.00	.00	
			.00	.00	.00	.00	.00	.00	.00	.00	.00	.00	.00	.00	.00
12	3	5	.00	.00	.00	.00	.00	.00	.00	.00	.00	.00	.00	.00	
			.00	.00	.00	.00	.00	.00	.00	.00	.00	.00	.00	.00	.00
12	3	6	.00	.00	.00	.00	.00	.00	.00	.00	.00	.00	.00	.00	
			.00	.00	.00	.00	.00	.00	.00	.00	.00	.00	.00	.00	.00
12	3	7	.00	.00	.00	.00	.00	.00	.00	.00	.00	.00	.00	.00	
			.00	.00	.00	.00	.00	.00	.00	.00	.00	.00	.00	.00	.00
12	3	8	.00	.00	.00	.00	.00	.00	.00	.00	.00	.00	.00	.00	
			.00	.00	.00	.00	.00	.00	.00	.00	.00	.00	.00	.00	.00
12	3	9	.00	.00	.00	.00	.00	.00	.00	.00	.00	.00	.00	.00	
			.00	.00	.00	.00	.00	.00	.00	.00	.00	.00	.00	.00	.00
12	3	10	.00	.00	.00	.00	.00	.00	.00	.00	.00	.00	.00	.00	
			.00	.00	.00	.00	.00	.00	.00	.00	.00	.00	.00	.00	.00
12	3	11	.00	.00	.00	.00	.00	.00	.00	.01	.02	.01	.00	.00	
			.00	.01	.01	.05	.02	.00	.00	.00	.00	.01	.02	.00	.16
12	3	12	.00	.00	.00	.00	.00	.00	.00	.00	.00	.00	.00	.00	
			.00	.00	.00	.00	.00	.00	.00	.00	.00	.00	.00	.00	.00
12	3	13	.00	.00	.00	.00	.00	.00	.00	.00	.00	.00	.00	.00	
			.00	.00	.00	.00	.00	.00	.00	.00	.00	.00	.00	.00	.00
12	3	14	.00	.00	.00	.00	.00	.00	.00	.00	.00	.00	.00	.00	
			.00	.00	.00	.00	.00	.00	.00	.00	.00	.00	.00	.00	.00
12	3	15	.00	.00	.00	.00	.00	.00	.00	.00	.00	.00	.00	.00	
			.00	.00	.00	.00	.00	.00	.00	.00	.00	.00	.00	.00	.00
12	3	16	.00	.00	.00	.00	.00	.00	.00	.00	.00	.00	.00	.00	
			.00	.00	.00	.00	.00	.00	.00	.00	.00	.00	.00	.00	.00
12	3	17	.00	.00	.00	.00	.00	.00	.00	.00	.00	.00	.00	.00	
			.00	.00	.00	.00	.00	.00	.00	.00	.00	.00	.00	.00	.00

NPPD-COOPER NUCLEAR STATION PRECIPITATION DATA FOR 2012 RAIN VERSION PC-1.0

YR	MON	DAY	1AM 1PM	2AM 2PM	3AM 3PM	4AM 4PM	5AM 5PM	6AM 6PM	7AM 7PM	8AM 8PM	9AM 9PM	10AM 10PM	11AM 11PM	12N 12MDNT	TOTAL
12	3	18	.00	.00	.00	.00	.00	.00	.00	.00	.00	.00	.00	.00	
			.00	.00	.00	.00	.00	.00	.00	.00	.00	.00	.00	.00	.00
12	3	19	.00	.00	.00	.00	.00	.00	.00	.00	.00	.00	.00	.00	
			.03	.09	.04	.02	.01	.01	.00	.00	.00	.00	.00	.00	.20
12	3	20	.00	.00	.00	.00	.00	.00	.00	.01	.02	.00	.01	.08	
			.08	.02	.05	.07	.01	.00	.04	.00	.00	.01	.00	.00	.40
12	3	21	.00	.00	.00	.00	.01	.00	.00	.00	.00	.00	.00	.00	
			.06	.06	.07	.09	.01	.00	.00	.01	.01	.00	.00	.01	.33
12	3	22	.03	.00	.00	.00	.00	.00	.00	.00	.00	.00	.00	.00	
			.00	.00	.00	.00	.00	.00	.01	.01	.05	.08	.08	.09	.35
12	3	23	.01	.00	.00	.00	.00	.00	.00	.00	.00	.00	.00	.00	
			.00	.00	.00	.00	.00	.00	.00	.00	.00	.00	.00	.00	.01
12	3	24	.00	.00	.00	.00	.00	.00	.00	.00	.00	.00	.00	.00	
			.00	.00	.00	.00	.00	.00	.00	.00	.00	.00	.00	.00	.00
12	3	25	.00	.00	.00	.00	.00	.00	.00	.00	.00	.00	.00	.00	
			.00	.00	.00	.00	.00	.00	.00	.00	.00	.00	.00	.00	.00
12	3	26	.00	.00	.00	.00	.00	.00	.00	.00	.00	.00	.00	.00	
			.00	.00	.00	.00	.00	.00	.00	.00	.00	.00	.00	.00	.00
12	3	27	.00	.00	.00	.00	.00	.00	.00	.00	.00	.00	.00	.00	
			.00	.00	.00	.00	.00	.00	.00	.00	.00	.00	.00	.00	.00
12	3	28	.00	.00	.00	.00	.00	.00	.00	.00	.00	.00	.00	.00	
			.00	.00	.00	.00	.00	.00	.00	.00	.00	.00	.00	.00	.00
12	3	29	.00	.00	.00	.00	.00	.00	.00	.00	.00	.00	.00	.00	
			.00	.00	.00	.00	.00	.00	.00	.01	.09	.00	.00	.00	.10
12	3	30	.00	.00	.00	.00	.00	.00	.00	.00	.00	.00	.00	.00	
			.00	.00	.00	.00	.00	.00	.00	.00	.00	.00	.00	.00	.00
12	3	31	.00	.00	.00	.00	.00	.00	.00	.00	.00	.00	.00	.00	
			.00	.00	.00	.00	.00	.00	.00	.00	.00	.00	.00	.00	.00

NPPD-COOPER NUCLEAR STATION PRECIPITATION DATA FOR 2012 RAIN VERSION PC-1.0

MONTH OF MARCH

FOR ALL TEMPERATURES

TOTAL NUMBER OF HOURS - 744
NUMBER OF MISSING HOURS - 0
TOTAL HOURS OF PRECIPITATION - 45
TOTAL DAYS WITH PRECIPITATION - 7
TOTAL AMOUNT OF PRECIPITATION - 1.55 INCHES
MAXIMUM 1-HOUR PRECIPITATION - .09 INCHES
MAXIMUM DAILY PRECIPITATION - .40 INCHES

1 HOUR PERIOD IN MONTH WITH GREATEST AMOUNT PRECIPITATION STARTS DAY 29 HOUR 21 - .09 INCHES
6 HOUR PERIOD IN MONTH WITH GREATEST AMOUNT PRECIPITATION STARTS DAY 22 HOUR 20 - .32 INCHES
12 HOUR PERIOD IN MONTH WITH GREATEST AMOUNT PRECIPITATION STARTS DAY 20 HOUR 8 - .39 INCHES
18 HOUR PERIOD IN MONTH WITH GREATEST AMOUNT PRECIPITATION STARTS DAY 20 HOUR 8 - .40 INCHES
24 HOUR PERIOD IN MONTH WITH GREATEST AMOUNT PRECIPITATION STARTS DAY 20 HOUR 8 - .41 INCHES

FOR TEMPERATURES LESS THAN OR EQUAL TO 32 DEGREES

TOTAL NUMBER OF HOURS - 41
NUMBER OF MISSING HOURS - 0
TOTAL HOURS OF PRECIPITATION - 0
TOTAL DAYS WITH PRECIPITATION - 0
TOTAL AMOUNT OF PRECIPITATION - .00 INCHES
MAXIMUM 1-HOUR PRECIPITATION - .00 INCHES
MAXIMUM DAILY PRECIPITATION - .00 INCHES

NPPD-COOPER NUCLEAR STATION PRECIPITATION DATA FOR 2012 RAIN VERSION PC-1.0

MONTH OF MARCH

PRECIPITATION INTENSITY - DURATION
(NUMBER OF OCCURRENCES)

AMOUNT INCHES	DURATION (HOURS) 1	6	12	18	24
.01	45	95	128	154	172
.02	25	80	119	150	169
.03	19	76	113	148	168
.04	17	62	103	140	161
.05	15	52	94	133	157
.07	10	46	84	122	152
.10	0	37	79	115	148
.15	0	26	51	79	108
.20	0	16	43	67	92
.25	0	9	30	48	73
.30	0	5	22	43	68
.35	0	0	7	19	37
.40	0	0	0	4	11
.45	0	0	0	0	0
.50	0	0	0	0	0
.60	0	0	0	0	0
.70	0	0	0	0	0
.80	0	0	0	0	0
.90	0	0	0	0	0
1.00	0	0	0	0	0
1.10	0	0	0	0	0
1.20	0	0	0	0	0
1.30	0	0	0	0	0
1.40	0	0	0	0	0
1.50	0	0	0	0	0
1.60	0	0	0	0	0
1.70	0	0	0	0	0
1.80	0	0	0	0	0
1.90	0	0	0	0	0
2.00	0	0	0	0	0

ENTRIES INDICATE NUMBER OF DURATION PERIODS WITH RAINFALL GREATER THAN OR EQUAL TO AMOUNT SHOWN

NPPD-COOPER NUCLEAR STATION PRECIPITATION DATA FOR 2012 RAIN VERSION PC-1.0

JAN-MAR INDEX

FOR ALL TEMPERATURES

TOTAL NUMBER OF HOURS - 2184
NUMBER OF MISSING HOURS - 0
TOTAL HOURS OF PRECIPITATION - 90
TOTAL DAYS WITH PRECIPITATION - 13
TOTAL AMOUNT OF PRECIPITATION - 3.78 INCHES
MAXIMUM 1-HOUR PRECIPITATION - .41 INCHES
MAXIMUM DAILY PRECIPITATION - 1.03 INCHES

1 HOUR PERIOD IN MONTH WITH GREATEST AMOUNT PRECIPITATION STARTS MONTH 2 DAY 3 HOUR 8 - .41 INCHES
6 HOUR PERIOD IN MONTH WITH GREATEST AMOUNT PRECIPITATION STARTS MONTH 2 DAY 3 HOUR 6 - 1.02 INCHES
12 HOUR PERIOD IN MONTH WITH GREATEST AMOUNT PRECIPITATION STARTS MONTH 2 DAY 3 HOUR 6 - 1.02 INCHES
18 HOUR PERIOD IN MONTH WITH GREATEST AMOUNT PRECIPITATION STARTS MONTH 2 DAY 3 HOUR 6 - 1.02 INCHES
24 HOUR PERIOD IN MONTH WITH GREATEST AMOUNT PRECIPITATION STARTS MONTH 2 DAY 3 HOUR 6 - 1.29 INCHES

FOR TEMPERATURES LESS THAN OR EQUAL TO 32 DEGREES

TOTAL NUMBER OF HOURS - 596
NUMBER OF MISSING HOURS - 0
TOTAL HOURS OF PRECIPITATION - 5
TOTAL DAYS WITH PRECIPITATION - 2
TOTAL AMOUNT OF PRECIPITATION - .06 INCHES
MAXIMUM 1-HOUR PRECIPITATION - .02 INCHES
MAXIMUM DAILY PRECIPITATION - .04 INCHES

JAN-MAR INDEX

PRECIPITATION INTENSITY - DURATION
(NUMBER OF OCCURRENCES)

AMOUNT INCHES	DURATION (HOURS) 1	6	12	18	24
.01	90	182	252	310	358
.02	55	158	234	298	347
.03	39	139	212	275	319
.04	30	122	200	265	310
.05	26	105	178	239	281
.07	17	93	161	223	271
.10	6	75	147	206	257
.15	4	50	103	149	190
.20	2	35	87	132	169
.25	2	24	66	108	147
.30	1	18	55	99	139
.35	1	7	27	60	95
.40	1	7	16	35	57
.45	0	7	13	25	39
.50	0	6	12	20	34
.60	0	5	11	18	28
.70	0	5	11	17	24
.80	0	5	11	17	24
.90	0	3	9	15	23
1.00	0	3	9	15	22
1.10	0	0	0	0	6
1.20	0	0	0	0	3
1.30	0	0	0	0	0
1.40	0	0	0	0	0
1.50	0	0	0	0	0
1.60	0	0	0	0	0
1.70	0	0	0	0	0
1.80	0	0	0	0	0
1.90	0	0	0	0	0
2.00	0	0	0	0	0

NPPD-COOPER NUCLEAR STATION PRECIPITATION DATA FOR 2012 RAIN VERSION PC-1.0

YR	MON	DAY	1AM 1PM	2AM 2PM	3AM 3PM	4AM 4PM	5AM 5PM	6AM 6PM	7AM 7PM	8AM 8PM	9AM 9PM	10AM 10PM	11AM 11PM	12N 12MDNT	TOTAL
12	4	1	.00	.00	.00	.00	.00	.00	.00	.00	.00	.00	.00	.00	
			.00	.00	.00	.00	.00	.00	.00	.00	.00	.00	.00	.00	.00
12	4	2	.00	.00	.00	.00	.00	.00	.00	.00	.00	.00	.00	.00	
			.00	.00	.00	.00	.00	.00	.00	.00	.00	.00	.00	.00	.00
12	4	3	.00	.00	.00	.00	.00	.00	.00	.00	.00	.00	.00	.00	
			.00	.00	.00	.00	.00	.00	.00	.00	.00	.00	.00	.00	.00
12	4	4	.00	.00	.00	.00	.00	.00	.00	.00	.00	.00	.00	.00	
			.00	.00	.00	.00	.00	.00	.00	.00	.11	.27	.33	.20	.91
12	4	5	.00	.00	.00	.00	.00	.00	.00	.00	.00	.00	.00	.00	
			.00	.00	.00	.00	.00	.00	.00	.00	.00	.00	.00	.00	.00
12	4	6	.00	.00	.00	.00	.00	.00	.00	.00	.00	.00	.00	.00	
			.00	.00	.00	.00	.00	.00	.00	.00	.00	.00	.00	.00	.00
12	4	7	.00	.00	.00	.00	.00	.07	.16	.02	.00	.00	.00	.00	
			.00	.00	.00	.00	.00	.00	.00	.00	.00	.00	.00	.00	.25
12	4	8	.00	.00	.00	.00	.00	.00	.00	.00	.00	.00	.00	.00	
			.00	.00	.00	.00	.00	.00	.00	.00	.00	.00	.00	.00	.00
12	4	9	.00	.00	.00	.00	.00	.00	.00	.00	.00	.00	.00	.00	
			.00	.00	.00	.00	.00	.00	.00	.00	.00	.00	.00	.00	.00
12	4	10	.00	.00	.00	.00	.00	.00	.00	.00	.00	.00	.00	.00	
			.00	.00	.00	.00	.00	.00	.00	.00	.00	.00	.00	.00	.00
12	4	11	.00	.00	.00	.00	.00	.00	.00	.00	.00	.00	.00	.00	
			.00	.00	.00	.00	.00	.00	.00	.00	.00	.00	.00	.00	.00
12	4	12	.00	.00	.00	.00	.00	.00	.00	.00	.00	.00	.00	.00	
			.07	.25	.01	.00	.00	.00	.00	.00	.00	.00	.02	.15	.50
12	4	13	.04	.00	.16	.16	.00	.00	.00	.00	.00	.00	.00	.00	
			.00	.00	.00	.00	.00	.00	.00	.00	.00	.00	.00	.00	.36
12	4	14	.00	.00	.00	.00	.00	.00	.00	.00	.00	.00	.00	.00	
			.00	.00	.00	.04	.02	.00	.00	.00	.00	.00	.00	.09	.15
12	4	15	.01	.03	.01	.01	.00	.00	.00	.00	.00	.00	.00	.00	
			.00	.00	.00	.00	.00	.00	.00	.00	.00	.00	.00	.00	.06
12	4	16	.00	.00	.00	.00	.00	.00	.00	.00	.00	.00	.00	.00	
			.00	.00	.00	.00	.00	.00	.00	.00	.00	.00	.00	.00	.00
12	4	17	.00	.00	.00	.00	.00	.00	.05	.04	.00	.00	.00	.00	
			.00	.00	.00	.00	.00	.00	.00	.00	.00	.00	.00	.00	.09

NPPD-COOPER NUCLEAR STATION PRECIPITATION DATA FOR 2012 RAIN VERSION PC-1.0

YR	MON	DAY	1AM 1PM	2AM 2PM	3AM 3PM	4AM 4PM	5AM 5PM	6AM 6PM	7AM 7PM	8AM 8PM	9AM 9PM	10AM 10PM	11AM 11PM	12N 12MDNT	TOTAL
12	4	18	.00	.00	.00	.00	.00	.00	.00	.00	.00	.00	.00	.00	
			.00	.00	.00	.00	.00	.00	.00	.00	.00	.00	.00	.00	.00
12	4	19	.00	.00	.00	.00	.00	.00	.00	.01	.00	.00	.00	.00	
			.00	.00	.00	.00	.00	.00	.00	.00	.00	.00	.00	.00	.01
12	4	20	.00	.00	.00	.00	.00	.00	.00	.00	.00	.00	.00	.00	
			.00	.00	.00	.00	.00	.00	.00	.00	.00	.00	.00	.00	.00
12	4	21	.00	.00	.00	.00	.00	.00	.00	.00	.00	.00	.00	.00	
			.00	.00	.00	.00	.00	.00	.00	.00	.00	.00	.00	.00	.00
12	4	22	.00	.00	.00	.00	.00	.00	.00	.00	.00	.00	.00	.00	
			.00	.00	.00	.00	.00	.00	.00	.00	.00	.00	.00	.00	.00
12	4	23	.00	.00	.00	.00	.00	.00	.00	.00	.00	.00	.00	.00	
			.00	.00	.00	.00	.00	.00	.00	.00	.00	.00	.00	.00	.00
12	4	24	.00	.00	.00	.00	.00	.00	.00	.00	.00	.00	.00	.00	
			.00	.00	.00	.00	.00	.00	.00	.00	.00	.00	.00	.00	.00
12	4	25	.00	.00	.00	.00	.00	.00	.00	.00	.00	.00	.00	.00	
			.00	.00	.00	.00	.00	.00	.00	.00	.00	.00	.00	.00	.00
12	4	26	.00	.00	.00	.00	.00	.00	.00	.00	.00	.00	.00	.00	
			.00	.00	.00	.00	.00	.00	.00	.00	.00	.00	.00	.00	.00
12	4	27	.00	.00	.00	.00	.00	.00	.00	.00	.00	.00	.00	.00	
			.00	.00	.00	.00	.00	.00	.06	.00	.06	.00	.00	.00	.12
12	4	28	.00	.00	.00	.00	.01	.00	.00	.00	.00	.00	.00	.00	
			.00	.00	.00	.00	.00	.00	.00	.00	.00	.00	.00	.00	.01
12	4	29	.00	.00	.00	.00	.00	.00	.00	.00	.00	.08	.04	.00	
			.02	.00	.00	.00	.02	.00	.00	.00	.00	.00	.00	.00	.16
12	4	30	.00	.00	.00	.00	.00	.00	.00	.00	.00	.00	.00	.00	
			.00	.00	.00	.00	.00	.00	.00	.00	.00	.00	.00	.00	.00

NPPD-COOPER NUCLEAR STATION PRECIPITATION DATA FOR 2012 RAIN VERSION PC-1.0

MONTH OF APRIL

FOR ALL TEMPERATURES

TOTAL NUMBER OF HOURS - 720
NUMBER OF MISSING HOURS - 0
TOTAL HOURS OF PRECIPITATION - 32
TOTAL DAYS WITH PRECIPITATION - 11
TOTAL AMOUNT OF PRECIPITATION - 2.62 INCHES
MAXIMUM 1-HOUR PRECIPITATION - .33 INCHES
MAXIMUM DAILY PRECIPITATION - .91 INCHES

1 HOUR PERIOD IN MONTH WITH GREATEST AMOUNT PRECIPITATION STARTS DAY 4 HOUR 23 - .33 INCHES
6 HOUR PERIOD IN MONTH WITH GREATEST AMOUNT PRECIPITATION STARTS DAY 4 HOUR 21 - .91 INCHES
12 HOUR PERIOD IN MONTH WITH GREATEST AMOUNT PRECIPITATION STARTS DAY 4 HOUR 21 - .91 INCHES
18 HOUR PERIOD IN MONTH WITH GREATEST AMOUNT PRECIPITATION STARTS DAY 4 HOUR 21 - .91 INCHES
24 HOUR PERIOD IN MONTH WITH GREATEST AMOUNT PRECIPITATION STARTS DAY 4 HOUR 21 - .91 INCHES

FOR TEMPERATURES LESS THAN OR EQUAL TO 32 DEGREES

TOTAL NUMBER OF HOURS - 0
NUMBER OF MISSING HOURS - 0
TOTAL HOURS OF PRECIPITATION - 0
TOTAL DAYS WITH PRECIPITATION - 0
TOTAL AMOUNT OF PRECIPITATION - .00 INCHES
MAXIMUM 1-HOUR PRECIPITATION - .00 INCHES
MAXIMUM DAILY PRECIPITATION - .00 INCHES

NPPD-COOPER NUCLEAR STATION PRECIPITATION DATA FOR 2012 RAIN VERSION PC-1.0

MONTH OF APRIL

PRECIPITATION INTENSITY - DURATION
(NUMBER OF OCCURRENCES)

AMOUNT INCHES	DURATION (HOURS) 1	6	12	18	24
.01	32	93	146	194	242
.02	26	79	125	167	209
.03	21	71	119	161	203
.04	20	71	119	161	203
.05	16	67	115	157	199
.07	13	54	103	145	187
.10	9	45	86	122	158
.15	8	32	69	99	129
.20	4	27	51	75	99
.25	3	23	47	66	84
.30	1	18	37	50	62
.35	0	11	26	39	51
.40	0	8	22	36	48
.45	0	8	22	36	48
.50	0	8	21	36	48
.60	0	5	11	22	34
.70	0	5	11	22	34
.80	0	4	10	19	31
.90	0	3	9	15	21
1.00	0	0	0	0	0
1.10	0	0	0	0	0
1.20	0	0	0	0	0
1.30	0	0	0	0	0
1.40	0	0	0	0	0
1.50	0	0	0	0	0
1.60	0	0	0	0	0
1.70	0	0	0	0	0
1.80	0	0	0	0	0
1.90	0	0	0	0	0
2.00	0	0	0	0	0

ENTRIES INDICATE NUMBER OF DURATION PERIODS WITH RAINFALL GREATER THAN OR EQUAL TO AMOUNT SHOWN

NPPD-COOPER NUCLEAR STATION PRECIPITATION DATA FOR 2012 RAIN VERSION PC-1.0

YR	MON	DAY	1AM 1PM	2AM 2PM	3AM 3PM	4AM 4PM	5AM 5PM	6AM 6PM	7AM 7PM	8AM 8PM	9AM 9PM	10AM 10PM	11AM 11PM	12N 12MDNT	TOTAL
12	5	1	.00	.00	.00	.00	.00	.00	.00	.00	.00	.00	.00	.00	
			.00	.00	.00	.00	.00	.00	.00	.00	.00	.00	.00	.00	.00
12	5	2	.00	.00	.00	.00	.00	.00	.00	.00	.00	.00	.00	.00	
			.00	.00	.00	.00	.00	.00	.00	.00	.00	.00	.00	.00	.00
12	5	3	.00	.00	.13	.19	.05	.00	.00	.00	.00	.00	.00	.00	
			.00	.00	.00	.00	.00	.00	.00	.00	.00	.00	.00	.00	.37
12	5	4	.00	.00	.00	.00	.00	.00	.00	.00	.00	.00	.00	.00	
			.00	.00	.00	.00	.00	.00	.00	.00	.00	.00	.00	.00	.00
12	5	5	.00	.00	.00	.00	.00	.00	.00	.00	.00	.00	.00	.00	
			.00	.00	.00	.00	.00	.00	.00	.00	.00	.00	.00	.00	.00
12	5	6	.00	.00	.00	.00	.00	.00	.00	.00	.00	.00	.00	.00	
			.00	.00	.00	.00	.00	.04	.02	.00	.41	.02	.01	.01	.51
12	5	7	.01	.00	.00	.00	.00	.00	.00	.00	.00	.00	.00	.00	
			.00	.00	.00	.00	.00	.00	.00	.00	.00	.00	.00	.00	.01
12	5	8	.00	.00	.00	.00	.00	.00	.00	.00	.00	.00	.00	.00	
			.00	.00	.00	.00	.00	.00	.00	.00	.00	.00	.00	.00	.00
12	5	9	.00	.00	.00	.00	.00	.00	.00	.00	.00	.00	.00	.00	
			.00	.00	.00	.00	.00	.00	.00	.00	.00	.00	.00	.00	.00
12	5	10	.00	.00	.00	.00	.00	.00	.00	.00	.00	.00	.00	.00	
			.00	.00	.00	.00	.00	.00	.00	.00	.00	.00	.00	.00	.00
12	5	11	.00	.00	.00	.00	.00	.00	.00	.00	.00	.00	.00	.00	
			.00	.00	.00	.00	.00	.00	.00	.00	.00	.00	.00	.00	.00
12	5	12	.00	.00	.00	.00	.00	.00	.00	.00	.00	.00	.00	.00	
			.00	.00	.00	.00	.00	.00	.00	.00	.00	.00	.00	.00	.00
12	5	13	.00	.00	.00	.00	.00	.00	.00	.00	.00	.00	.00	.00	
			.00	.00	.00	.00	.00	.00	.00	.00	.00	.00	.00	.00	.00
12	5	14	.00	.00	.00	.00	.00	.00	.00	.00	.00	.00	.00	.00	
			.00	.00	.00	.00	.00	.00	.00	.00	.00	.00	.00	.00	.00
12	5	15	.00	.00	.00	.00	.00	.00	.00	.00	.00	.00	.00	.00	
			.00	.00	.00	.00	.00	.00	.00	.00	.00	.00	.00	.00	.00
12	5	16	.00	.00	.00	.00	.00	.00	.00	.00	.00	.00	.00	.00	
			.00	.00	.00	.00	.00	.00	.00	.00	.00	.00	.00	.00	.00
12	5	17	.00	.00	.00	.00	.00	.00	.00	.00	.00	.00	.00	.00	
			.00	.00	.00	.00	.00	.00	.00	.00	.00	.00	.00	.00	.00

NPPD-COOPER NUCLEAR STATION PRECIPITATION DATA FOR 2012 RAIN VERSION PC-1.0

YR	MON	DAY	1AM 1PM	2AM 2PM	3AM 3PM	4AM 4PM	5AM 5PM	6AM 6PM	7AM 7PM	8AM 8PM	9AM 9PM	10AM 10PM	11AM 11PM	12N 12MDNT	TOTAL
12	5	18	.00	.00	.00	.00	.00	.00	.00	.00	.00	.00	.00	.00	
			.00	.00	.00	.00	.00	.00	.00	.00	.00	.00	.00	.00	.00
12	5	19	.00	.00	.00	.00	.00	.00	.00	.00	.00	.00	.00	.00	
			.00	.00	.00	.00	.00	.00	.00	.00	.00	.00	.00	.00	.00
12	5	20	.00	.00	.00	.00	.00	.00	.00	.00	.00	.00	.00	.00	
			.00	.00	.00	.00	.00	.00	.00	.00	.00	.00	.00	.00	.00
12	5	21	.00	.00	.00	.00	.00	.00	.00	.00	.00	.00	.00	.00	
			.00	.00	.00	.00	.00	.00	.00	.00	.00	.00	.00	.00	.00
12	5	22	.00	.00	.00	.00	.00	.00	.00	.00	.00	.00	.00	.00	
			.00	.00	.00	.00	.00	.00	.00	.00	.00	.00	.00	.00	.00
12	5	23	.00	.00	.00	.00	.00	.00	.00	.00	.00	.00	.00	.00	
			.00	.00	.00	.00	.00	.00	.00	.00	.00	.00	.00	.00	.00
12	5	24	.00	.00	.00	.00	.00	.00	.00	.00	.00	.00	.00	.00	
			.00	.00	.00	.00	.00	.00	.00	.00	.00	.00	.00	.00	.00
12	5	25	.00	.00	.00	.00	.00	.00	.00	.00	.00	.00	.00	.00	
			.00	.00	.00	.00	.00	.00	.00	.00	.00	.00	.00	.00	.00
12	5	26	.00	.00	.00	.00	.00	.00	.00	.00	.00	.00	.00	.00	
			.00	.00	.00	.00	.00	.00	.00	.00	.00	.00	.00	.00	.00
12	5	27	.00	.00	.00	.00	.00	.00	.00	.00	.00	.00	.00	.00	
			.00	.00	.00	.00	.00	.00	.00	.00	.00	.00	.00	.00	.00
12	5	28	.00	.00	.00	.00	.00	.00	.00	.00	.00	.00	.00	.00	
			.00	.00	.00	.00	.00	.00	.00	.00	.00	.00	.00	.00	.00
12	5	29	.00	.00	.00	.00	.00	.00	.00	.00	.00	.00	.00	.00	
			.00	.00	.00	.00	.00	.00	.00	.00	.00	.00	.00	.00	.00
12	5	30	.00	.00	.00	.00	.00	.00	.00	.00	.00	.00	.00	.00	
			.00	.00	.00	.05	.01	.01	.12	.00	.00	.00	.00	.00	.19
12	5	31	.01	.04	.00	.00	.00	.00	.00	.00	.00	.00	.00	.00	
			.00	.00	.00	.00	.00	.00	.00	.00	.00	.00	.00	.00	.05

NPPD-COOPER NUCLEAR STATION PRECIPITATION DATA FOR 2012 RAIN VERSION PC-1.0

MONTH OF MAY

FOR ALL TEMPERATURES

TOTAL NUMBER OF HOURS - 744
NUMBER OF MISSING HOURS - 0
TOTAL HOURS OF PRECIPITATION - 16
TOTAL DAYS WITH PRECIPITATION - 5
TOTAL AMOUNT OF PRECIPITATION - 1.13 INCHES
MAXIMUM 1-HOUR PRECIPITATION - .41 INCHES
MAXIMUM DAILY PRECIPITATION - .51 INCHES

1 HOUR PERIOD IN MONTH WITH GREATEST AMOUNT PRECIPITATION STARTS DAY 6 HOUR 21 - .41 INCHES
6 HOUR PERIOD IN MONTH WITH GREATEST AMOUNT PRECIPITATION STARTS DAY 6 HOUR 18 - .50 INCHES
12 HOUR PERIOD IN MONTH WITH GREATEST AMOUNT PRECIPITATION STARTS DAY 6 HOUR 18 - .52 INCHES
18 HOUR PERIOD IN MONTH WITH GREATEST AMOUNT PRECIPITATION STARTS DAY 6 HOUR 18 - .52 INCHES
24 HOUR PERIOD IN MONTH WITH GREATEST AMOUNT PRECIPITATION STARTS DAY 6 HOUR 18 - .52 INCHES

FOR TEMPERATURES LESS THAN OR EQUAL TO 32 DEGREES

TOTAL NUMBER OF HOURS - 0
NUMBER OF MISSING HOURS - 0
TOTAL HOURS OF PRECIPITATION - 0
TOTAL DAYS WITH PRECIPITATION - 0
TOTAL AMOUNT OF PRECIPITATION - .00 INCHES
MAXIMUM 1-HOUR PRECIPITATION - .00 INCHES
MAXIMUM DAILY PRECIPITATION - .00 INCHES

NPPD-COOPER NUCLEAR STATION PRECIPITATION DATA FOR 2012 RAIN VERSION PC-1.0

MONTH OF MAY

PRECIPITATION INTENSITY - DURATION
(NUMBER OF OCCURRENCES)

AMOUNT INCHES	DURATION (HOURS) 1	6	12	18	24
.01	16	37	55	73	90
.02	10	35	54	72	89
.03	8	34	53	71	88
.04	8	33	52	70	87
.05	6	31	50	68	86
.07	4	20	38	56	74
.10	4	19	37	55	73
.15	2	15	36	54	72
.20	1	12	27	45	63
.25	1	11	23	35	47
.30	1	11	23	35	47
.35	1	10	22	34	46
.40	1	6	12	18	24
.45	0	6	12	18	24
.50	0	1	7	13	19
.60	0	0	0	0	0
.70	0	0	0	0	0
.80	0	0	0	0	0
.90	0	0	0	0	0
1.00	0	0	0	0	0
1.10	0	0	0	0	0
1.20	0	0	0	0	0
1.30	0	0	0	0	0
1.40	0	0	0	0	0
1.50	0	0	0	0	0
1.60	0	0	0	0	0
1.70	0	0	0	0	0
1.80	0	0	0	0	0
1.90	0	0	0	0	0
2.00	0	0	0	0	0

ENTRIES INDICATE NUMBER OF DURATION PERIODS WITH RAINFALL GREATER THAN OR EQUAL TO AMOUNT SHOWN

NPPD-COOPER NUCLEAR STATION PRECIPITATION DATA FOR 2012 RAIN VERSION PC-1.0

YR	MON	DAY	1AM 1PM	2AM 2PM	3AM 3PM	4AM 4PM	5AM 5PM	6AM 6PM	7AM 7PM	8AM 8PM	9AM 9PM	10AM 10PM	11AM 11PM	12N 12MDNT	TOTAL
12	6	1	.00	.00	.00	.00	.00	.00	.00	.00	.00	.00	.00	.00	
			.00	.00	.00	.00	.00	.00	.00	.00	.00	.00	.00	.00	.00
12	6	2	.00	.00	.00	.00	.00	.00	.00	.00	.00	.00	.00	.00	
			.00	.00	.00	.00	.00	.00	.00	.00	.00	.00	.00	.00	.00
12	6	3	.00	.00	.00	.00	.00	.00	.00	.00	.00	.00	.00	.00	
			.00	.00	.00	.00	.00	.00	.00	.00	.00	.00	.00	.00	.00
12	6	4	.00	.00	.00	.00	.00	.00	.00	.00	.00	.00	.00	.00	
			.00	.00	.00	.00	.00	.00	.00	.00	.00	.00	.00	.00	.00
12	6	5	.00	.00	.00	.00	.00	.00	.00	.00	.00	.00	.00	.00	
			.00	.00	.00	.00	.00	.00	.00	.00	.00	.00	.00	.00	.00
12	6	6	.00	.00	.00	.00	.00	.00	.00	.00	.00	.00	.00	.00	
			.00	.00	.00	.00	.00	.00	.00	.00	.00	.00	.00	.00	.00
12	6	7	.00	.00	.00	.00	.00	.00	.00	.00	.00	.00	.00	.00	
			.00	.00	.00	.00	.00	.00	.00	.00	.00	.00	.00	.00	.00
12	6	8	.00	.00	.00	.00	.00	.00	.00	.00	.00	.00	.00	.00	
			.00	.00	.00	.00	.00	.00	.00	.00	.00	.00	.00	.00	.00
12	6	9	.00	.00	.00	.00	.00	.00	.00	.00	.00	.00	.00	.00	
			.00	.00	.00	.00	.00	.00	.00	.00	.00	.00	.00	.00	.00
12	6	10	.00	.00	.00	.00	.00	.00	.00	.00	.00	.00	.00	.00	
			.00	.00	.00	.00	.00	.00	.00	.00	.01	.00	.01	.00	.02
12	6	11	.06	.00	.00	.00	.00	.00	.00	.00	.00	.00	.00	.00	
			.00	.00	.00	.00	.00	.00	.00	.00	.00	.00	.00	.00	.06
12	6	12	.00	.00	.00	.00	.00	.00	.00	.00	.00	.00	.00	.00	
			.00	.00	.00	.00	.00	.00	.00	.00	.00	.00	.00	.00	.00
12	6	13	.00	.00	.00	.00	.00	.00	.00	.00	.00	.00	.00	.00	
			.00	.00	.00	.00	.00	.00	.00	.00	.00	.00	.00	.00	.00
12	6	14	.00	.00	.00	.00	.00	.00	.00	.00	.00	.00	.00	.00	
			.00	.00	.00	.00	.00	.00	.00	.00	.00	.07	.17	.49	.73
12	6	15	.21	.05	.00	.00	.01	.00	.00	.00	.00	.00	.00	.00	
			.00	.00	.00	.00	.00	.00	.00	.00	.00	.00	.00	.00	.27
12	6	16	.00	.00	.00	.00	.00	.00	.00	.00	.00	.00	.00	.00	
			.14	.06	.01	.00	.00	.00	.00	.00	.00	.00	.00	.00	.21
12	6	17	.00	.00	.00	.00	.00	.00	.00	.00	.00	.00	.00	.00	
			.00	.00	.00	.00	.00	.00	.00	.00	.00	.00	.00	.00	.00

NPPD-COOPER NUCLEAR STATION PRECIPITATION DATA FOR 2012 RAIN VERSION PC-1.0

YR	MON	DAY	1AM 1PM	2AM 2PM	3AM 3PM	4AM 4PM	5AM 5PM	6AM 6PM	7AM 7PM	8AM 8PM	9AM 9PM	10AM 10PM	11AM 11PM	12N 12MDNT	TOTAL
12	6	18	.00	.00	.00	.00	.00	.00	.00	.00	.00	.00	.00	.00	
			.00	.00	.00	.00	.00	.00	.00	.00	.00	.00	.00	.00	.00
12	6	19	.00	.00	.00	.00	.00	.00	.00	.00	.00	.00	.00	.00	
			.00	.00	.00	.00	.00	.00	.00	.00	.00	.00	.00	.00	.00
12	6	20	.00	.00	.00	.00	.00	.00	.00	.00	.00	.00	.00	.00	
			.00	.00	.00	.00	.00	.00	.00	.52	.10	.02	.12	.02	.78
12	6	21	.01	.00	.00	.00	.00	.00	.00	.00	.00	.00	.00	.00	
			.00	.00	.00	.00	.00	.00	.00	.00	.00	.00	.00	.00	.01
12	6	22	.00	.00	.00	.00	.00	.00	.00	.00	.00	.00	.00	.00	
			.00	.00	.00	.00	.00	.00	.00	.00	.00	.00	.00	.00	.00
12	6	23	.00	.00	.00	.01	.08	.09	.01	.03	.00	.12	.01	.00	
			.00	.00	.00	.00	.00	.00	.00	.00	.00	.00	.00	.00	.35
12	6	24	.00	.00	.00	.00	.00	.00	.00	.00	.00	.00	.00	.00	
			.00	.00	.00	.00	.00	.00	.00	.00	.00	.00	.00	.00	.00
12	6	25	.00	.00	.00	.00	.00	.00	.00	.00	.00	.00	.00	.00	
			.00	.00	.00	.00	.00	.00	.00	.00	.00	.00	.00	.00	.00
12	6	26	.00	.00	.00	.00	.00	.00	.00	.00	.00	.00	.00	.00	
			.00	.00	.00	.00	.00	.00	.00	.00	.00	.00	.00	.00	.00
12	6	27	.00	.00	.00	.00	.00	.00	.00	.00	.00	.00	.00	.00	
			.00	.00	.00	.00	.00	.00	.00	.00	.00	.00	.00	.00	.00
12	6	28	.00	.00	.00	.00	.00	.00	.00	.00	.00	.00	.00	.00	
			.00	.00	.00	.00	.00	.00	.00	.00	.00	.00	.00	.00	.00
12	6	29	.00	.00	.00	.00	.00	.00	.00	.00	.00	.00	.00	.00	
			.00	.00	.00	.00	.00	.00	.00	.00	.00	.00	.00	.00	.00
12	6	30	.00	.00	.00	.00	.00	.00	.00	.00	.00	.00	.00	.00	
			.00	.00	.00	.00	.00	.00	.00	.00	.00	.00	.00	.00	.00

NPPD-COOPER NUCLEAR STATION PRECIPITATION DATA FOR 2012 RAIN VERSION PC-1.0

MONTH OF JUNE

FOR ALL TEMPERATURES

TOTAL NUMBER OF HOURS - 720
NUMBER OF MISSING HOURS - 0
TOTAL HOURS OF PRECIPITATION - 25
TOTAL DAYS WITH PRECIPITATION - 8
TOTAL AMOUNT OF PRECIPITATION - 2.43 INCHES
MAXIMUM 1-HOUR PRECIPITATION - .52 INCHES
MAXIMUM DAILY PRECIPITATION - .78 INCHES

1 HOUR PERIOD IN MONTH WITH GREATEST AMOUNT PRECIPITATION STARTS DAY 20 HOUR 20 - .52 INCHES
6 HOUR PERIOD IN MONTH WITH GREATEST AMOUNT PRECIPITATION STARTS DAY 14 HOUR 22 - .99 INCHES
12 HOUR PERIOD IN MONTH WITH GREATEST AMOUNT PRECIPITATION STARTS DAY 14 HOUR 22 - 1.00 INCHES
18 HOUR PERIOD IN MONTH WITH GREATEST AMOUNT PRECIPITATION STARTS DAY 14 HOUR 22 - 1.00 INCHES
24 HOUR PERIOD IN MONTH WITH GREATEST AMOUNT PRECIPITATION STARTS DAY 14 HOUR 22 - 1.00 INCHES

FOR TEMPERATURES LESS THAN OR EQUAL TO 32 DEGREES

TOTAL NUMBER OF HOURS - 0
NUMBER OF MISSING HOURS - 0
TOTAL HOURS OF PRECIPITATION - 0
TOTAL DAYS WITH PRECIPITATION - 0
TOTAL AMOUNT OF PRECIPITATION - .00 INCHES
MAXIMUM 1-HOUR PRECIPITATION - .00 INCHES
MAXIMUM DAILY PRECIPITATION - .00 INCHES

NPPD-COOPER NUCLEAR STATION PRECIPITATION DATA FOR 2012 RAIN VERSION PC-1.0

MONTH OF JUNE

PRECIPITATION INTENSITY - DURATION
(NUMBER OF OCCURRENCES)

AMOUNT INCHES	DURATION (HOURS) 1	6	12	18	24
.01	25	55	85	115	145
.02	17	46	76	106	136
.03	15	44	74	104	134
.04	14	43	73	103	133
.05	14	43	73	103	133
.07	11	40	70	100	130
.10	8	33	57	81	105
.15	4	30	54	78	102
.20	3	24	48	72	96
.25	2	16	34	52	70
.30	2	13	31	49	67
.35	2	12	29	47	65
.40	2	12	24	36	48
.45	2	12	24	36	48
.50	1	12	24	36	48
.60	0	11	23	35	47
.70	0	9	21	33	45
.80	0	4	10	16	22
.90	0	4	10	16	22
1.00	0	0	5	11	17
1.10	0	0	0	0	0
1.20	0	0	0	0	0
1.30	0	0	0	0	0
1.40	0	0	0	0	0
1.50	0	0	0	0	0
1.60	0	0	0	0	0
1.70	0	0	0	0	0
1.80	0	0	0	0	0
1.90	0	0	0	0	0
2.00	0	0	0	0	0

ENTRIES INDICATE NUMBER OF DURATION PERIODS WITH RAINFALL GREATER THAN OR EQUAL TO AMOUNT SHOWN

NPPD-COOPER NUCLEAR STATION PRECIPITATION DATA FOR 2012 RAIN VERSION PC-1.0

APR-JUN INDEX

FOR ALL TEMPERATURES

TOTAL NUMBER OF HOURS - 2184
NUMBER OF MISSING HOURS - 0
TOTAL HOURS OF PRECIPITATION - 73
TOTAL DAYS WITH PRECIPITATION - 24
TOTAL AMOUNT OF PRECIPITATION - 6.18 INCHES
MAXIMUM 1-HOUR PRECIPITATION - .52 INCHES
MAXIMUM DAILY PRECIPITATION - .91 INCHES

1 HOUR PERIOD IN MONTH WITH GREATEST AMOUNT PRECIPITATION STARTS MONTH 6 DAY 20 HOUR 20 - .52 INCHES
6 HOUR PERIOD IN MONTH WITH GREATEST AMOUNT PRECIPITATION STARTS MONTH 6 DAY 14 HOUR 22 - .99 INCHES
12 HOUR PERIOD IN MONTH WITH GREATEST AMOUNT PRECIPITATION STARTS MONTH 6 DAY 14 HOUR 22 - 1.00 INCHES
18 HOUR PERIOD IN MONTH WITH GREATEST AMOUNT PRECIPITATION STARTS MONTH 6 DAY 14 HOUR 22 - 1.00 INCHES
24 HOUR PERIOD IN MONTH WITH GREATEST AMOUNT PRECIPITATION STARTS MONTH 6 DAY 14 HOUR 22 - 1.00 INCHES

FOR TEMPERATURES LESS THAN OR EQUAL TO 32 DEGREES

TOTAL NUMBER OF HOURS - 0
NUMBER OF MISSING HOURS - 0
TOTAL HOURS OF PRECIPITATION - 0
TOTAL DAYS WITH PRECIPITATION - 0
TOTAL AMOUNT OF PRECIPITATION - .00 INCHES
MAXIMUM 1-HOUR PRECIPITATION - .00 INCHES
MAXIMUM DAILY PRECIPITATION - .00 INCHES

NPPD-COOPER NUCLEAR STATION PRECIPITATION DATA FOR 2012 RAIN VERSION PC-1.0

APR-JUN INDEX

PRECIPITATION INTENSITY - DURATION
(NUMBER OF OCCURRENCES)

AMOUNT INCHES	DURATION (HOURS) 1	6	12	18	24
.01	73	185	286	382	478
.02	53	160	255	345	435
.03	44	149	246	336	426
.04	42	147	244	334	424
.05	36	141	238	328	418
.07	28	114	211	301	391
.10	21	97	180	258	336
.15	14	77	159	231	303
.20	8	63	126	192	258
.25	6	50	104	153	201
.30	4	42	91	134	176
.35	3	33	77	120	162
.40	3	26	58	90	120
.45	2	26	58	90	120
.50	1	21	52	85	115
.60	0	16	34	57	81
.70	0	14	32	55	79
.80	0	8	20	35	53
.90	0	7	19	31	43
1.00	0	0	5	11	17
1.10	0	0	0	0	0
1.20	0	0	0	0	0
1.30	0	0	0	0	0
1.40	0	0	0	0	0
1.50	0	0	0	0	0
1.60	0	0	0	0	0
1.70	0	0	0	0	0
1.80	0	0	0	0	0
1.90	0	0	0	0	0
2.00	0	0	0	0	0

NPPD-COOPER NUCLEAR STATION PRECIPITATION DATA FOR 2012 RAIN VERSION PC-1.0

JAN-JUN INDEX

FOR ALL TEMPERATURES

TOTAL NUMBER OF HOURS - 4368
NUMBER OF MISSING HOURS - 0
TOTAL HOURS OF PRECIPITATION - 163
TOTAL DAYS WITH PRECIPITATION - 37
TOTAL AMOUNT OF PRECIPITATION - 9.96 INCHES
MAXIMUM 1-HOUR PRECIPITATION - .52 INCHES
MAXIMUM DAILY PRECIPITATION - 1.03 INCHES

1 HOUR PERIOD IN MONTH WITH GREATEST AMOUNT PRECIPITATION STARTS MONTH 6 DAY 20 HOUR 20 - .52 INCHES
6 HOUR PERIOD IN MONTH WITH GREATEST AMOUNT PRECIPITATION STARTS MONTH 2 DAY 3 HOUR 6 - 1.02 INCHES
12 HOUR PERIOD IN MONTH WITH GREATEST AMOUNT PRECIPITATION STARTS MONTH 2 DAY 3 HOUR 6 - 1.02 INCHES
18 HOUR PERIOD IN MONTH WITH GREATEST AMOUNT PRECIPITATION STARTS MONTH 2 DAY 3 HOUR 6 - 1.02 INCHES
24 HOUR PERIOD IN MONTH WITH GREATEST AMOUNT PRECIPITATION STARTS MONTH 2 DAY 3 HOUR 6 - 1.29 INCHES

FOR TEMPERATURES LESS THAN OR EQUAL TO 32 DEGREES

TOTAL NUMBER OF HOURS - 596
NUMBER OF MISSING HOURS - 0
TOTAL HOURS OF PRECIPITATION - 5
TOTAL DAYS WITH PRECIPITATION - 2
TOTAL AMOUNT OF PRECIPITATION - .06 INCHES
MAXIMUM 1-HOUR PRECIPITATION - .02 INCHES
MAXIMUM DAILY PRECIPITATION - .04 INCHES

NPPD-COOPER NUCLEAR STATION PRECIPITATION DATA FOR 2012 RAIN VERSION PC-1.0

JAN-JUN INDEX

PRECIPITATION INTENSITY - DURATION
(NUMBER OF OCCURRENCES)

AMOUNT INCHES	DURATION (HOURS) 1	6	12	18	24
.01	163	367	538	692	836
.02	108	318	489	643	782
.03	83	288	458	611	745
.04	72	269	444	599	734
.05	62	246	416	567	699
.07	45	207	372	524	662
.10	27	172	327	464	593
.15	18	127	262	380	493
.20	10	98	213	324	427
.25	8	74	170	261	348
.30	5	60	146	233	315
.35	4	40	104	180	257
.40	4	33	74	125	177
.45	2	33	71	115	159
.50	1	27	64	105	149
.60	0	21	45	75	109
.70	0	19	43	72	103
.80	0	13	31	52	77
.90	0	10	28	46	66
1.00	0	3	14	26	39
1.10	0	0	0	0	6
1.20	0	0	0	0	3
1.30	0	0	0	0	0
1.40	0	0	0	0	0
1.50	0	0	0	0	0
1.60	0	0	0	0	0
1.70	0	0	0	0	0
1.80	0	0	0	0	0
1.90	0	0	0	0	0
2.00	0	0	0	0	0

NPPD-COOPER NUCLEAR STATION PRECIPITATION DATA FOR 2012 RAIN VERSION PC-1.0

YR	MON	DAY	1AM 1PM	2AM 2PM	3AM 3PM	4AM 4PM	5AM 5PM	6AM 6PM	7AM 7PM	8AM 8PM	9AM 9PM	10AM 10PM	11AM 11PM	12N 12MDNT	TOTAL
12	7	1	.00	.00	.00	.00	.00	.00	.00	.00	.00	.00	.00	.00	
			.00	.00	.00	.00	.00	.00	.00	.00	.00	.00	.00	.00	.00
12	7	2	.00	.00	.00	.00	.00	.00	.00	.00	.00	.00	.00	.00	
			.00	.00	.00	.00	.00	.00	.00	.00	.00	.00	.00	.00	.00
12	7	3	.00	.00	.00	.00	.00	.00	.00	.00	.00	.00	.00	.00	
			.00	.00	.00	.00	.00	.00	.00	.00	.00	.00	.00	.00	.00
12	7	4	.00	.00	.00	.00	.00	.00	.00	.00	.00	.00	.00	.00	
			.00	.00	.00	.00	.00	.00	.00	.00	.00	.00	.00	.00	.00
12	7	5	.00	.00	.00	.00	.00	.00	.00	.00	.00	.00	.00	.00	
			.00	.00	.00	.00	.00	.00	.00	.00	.00	.00	.00	.00	.00
12	7	6	.00	.00	.00	.00	.00	.00	.00	.00	.00	.00	.00	.00	
			.00	.00	.00	.00	.00	.00	.00	.00	.00	.00	.00	.00	.00
12	7	7	.00	.00	.00	.00	.00	.00	.00	.00	.00	.00	.00	.00	
			.00	.00	.00	.00	.00	.00	.00	.00	.00	.00	.00	.00	.00
12	7	8	.00	.00	.00	.00	.00	.00	.00	.00	.00	.00	.00	.00	
			.00	.00	.00	.00	.00	.00	.00	.00	.00	.00	.00	.00	.00
12	7	9	.00	.00	.00	.00	.00	.00	.00	.00	.00	.00	.00	.00	
			.00	.00	.00	.00	.00	.00	.00	.00	.00	.00	.00	.00	.00
12	7	10	.00	.00	.00	.00	.00	.00	.00	.00	.00	.00	.00	.00	
			.00	.00	.00	.00	.00	.00	.00	.00	.00	.00	.00	.00	.00
12	7	11	.00	.00	.00	.00	.00	.00	.00	.00	.00	.00	.00	.00	
			.00	.00	.00	.00	.00	.00	.00	.00	.00	.00	.00	.00	.00
12	7	12	.00	.00	.00	.00	.00	.00	.00	.00	.00	.00	.00	.00	
			.00	.00	.00	.00	.00	.00	.00	.00	.00	.00	.00	.00	.00
12	7	13	.00	.00	.00	.00	.00	.00	.00	.00	.00	.00	.00	.00	
			.00	.00	.00	.00	.00	.00	.00	.00	.00	.00	.00	.00	.00
12	7	14	.00	.00	.00	.00	.00	.00	.00	.00	.00	.00	.00	.00	
			.00	.00	.00	.00	.00	.00	.00	.00	.00	.00	.00	.00	.00
12	7	15	.00	.00	.00	.00	.00	.00	.00	.00	.00	.00	.00	.00	
			.00	.00	.00	.00	.00	.00	.00	.00	.00	.00	.00	.00	.00
12	7	16	.00	.00	.00	.00	.00	.00	.00	.00	.00	.00	.00	.00	
			.00	.00	.00	.00	.00	.00	.00	.00	.00	.00	.00	.00	.00
12	7	17	.00	.00	.00	.00	.00	.00	.00	.00	.00	.00	.00	.00	
			.00	.00	.00	.00	.00	.00	.00	.00	.00	.00	.00	.00	.00

NPPD-COOPER NUCLEAR STATION PRECIPITATION DATA FOR 2012 RAIN VERSION PC-1.0

YR	MON	DAY	1AM 1PM	2AM 2PM	3AM 3PM	4AM 4PM	5AM 5PM	6AM 6PM	7AM 7PM	8AM 8PM	9AM 9PM	10AM 10PM	11AM 11PM	12N 12MDNT	TOTAL
12	7	18	.00	.00	.00	.00	.00	.00	.00	.00	.00	.00	.00	.00	
			.00	.00	.00	.00	.00	.00	.00	.00	.00	.00	.00	.00	.00
12	7	19	.00	.00	.00	.00	.00	.00	.00	.00	.00	.00	.00	.00	
			.00	.00	.00	.00	.00	.00	.00	.00	.00	.00	.00	.00	.00
12	7	20	.00	.00	.00	.00	.00	.00	.00	.00	.00	.00	.00	.00	
			.00	.00	.00	.00	.00	.00	.00	.00	.00	.00	.00	.00	.00
12	7	21	.00	.00	.00	.00	.00	.00	.00	.00	.00	.00	.00	.00	
			.00	.00	.00	.00	.00	.00	.00	.00	.00	.00	.00	.00	.00
12	7	22	.00	.00	.00	.00	.00	.00	.00	.00	.00	.00	.00	.00	
			.00	.00	.00	.00	.00	.00	.00	.00	.00	.00	.00	.00	.00
12	7	23	.00	.00	.00	.00	.00	.00	.00	.00	.00	.00	.00	.00	
			.00	.00	.00	.00	.00	.00	.00	.00	.00	.00	.00	.00	.00
12	7	24	.00	.00	.00	.00	.00	.00	.00	.00	.00	.00	.00	.00	
			.00	.00	.00	.00	.00	.00	.00	.00	.00	.00	.00	.00	.00
12	7	25	.00	.00	.00	.00	.00	.00	.00	.00	.00	.00	.00	.00	
			.00	.00	.00	.00	.00	.00	.00	.14	.19	.04	.01	.00	.38
12	7	26	.12	.02	.00	.00	.00	.00	.00	.00	.00	.00	.00	.00	
			.00	.00	.00	.00	.00	.00	.00	.00	.00	.00	.00	.00	.14
12	7	27	.00	.00	.00	.00	.00	.00	.00	.00	.00	.00	.00	.00	
			.00	.00	.00	.00	.00	.00	.00	.00	.00	.00	.00	.00	.00
12	7	28	.00	.00	.00	.00	.00	.00	.00	.00	.00	.00	.00	.00	
			.00	.00	.00	.00	.00	.00	.00	.00	.00	.00	.00	.00	.00
12	7	29	.00	.00	.00	.00	.00	.00	.00	.00	.00	.00	.00	.00	
			.00	.00	.00	.00	.00	.00	.00	.00	.00	.00	.00	.00	.00
12	7	30	.00	.00	.00	.00	.01	.02	.00	.01	.00	.00	.00	.00	
			.00	.00	.00	.00	.00	.00	.00	.00	.00	.00	.00	.00	.04
12	7	31	.00	.00	.00	.00	.00	.00	.00	.00	.00	.00	.00	.00	
			.00	.00	.00	.00	.00	.00	.00	.00	.00	.00	.00	.00	.00

NPPD-COOPER NUCLEAR STATION PRECIPITATION DATA FOR 2012 RAIN VERSION PC-1.0

MONTH OF JULY

FOR ALL TEMPERATURES

TOTAL NUMBER OF HOURS - 744
NUMBER OF MISSING HOURS - 0
TOTAL HOURS OF PRECIPITATION - 9
TOTAL DAYS WITH PRECIPITATION - 3
TOTAL AMOUNT OF PRECIPITATION - .56 INCHES
MAXIMUM 1-HOUR PRECIPITATION - .19 INCHES
MAXIMUM DAILY PRECIPITATION - .38 INCHES

1 HOUR PERIOD IN MONTH WITH GREATEST AMOUNT PRECIPITATION STARTS DAY 25 HOUR 21 - .19 INCHES
6 HOUR PERIOD IN MONTH WITH GREATEST AMOUNT PRECIPITATION STARTS DAY 25 HOUR 20 - .50 INCHES
12 HOUR PERIOD IN MONTH WITH GREATEST AMOUNT PRECIPITATION STARTS DAY 25 HOUR 20 - .52 INCHES
18 HOUR PERIOD IN MONTH WITH GREATEST AMOUNT PRECIPITATION STARTS DAY 25 HOUR 20 - .52 INCHES
24 HOUR PERIOD IN MONTH WITH GREATEST AMOUNT PRECIPITATION STARTS DAY 25 HOUR 20 - .52 INCHES

FOR TEMPERATURES LESS THAN OR EQUAL TO 32 DEGREES

TOTAL NUMBER OF HOURS - 0
NUMBER OF MISSING HOURS - 0
TOTAL HOURS OF PRECIPITATION - 0
TOTAL DAYS WITH PRECIPITATION - 0
TOTAL AMOUNT OF PRECIPITATION - .00 INCHES
MAXIMUM 1-HOUR PRECIPITATION - .00 INCHES
MAXIMUM DAILY PRECIPITATION - .00 INCHES

NPPD-COOPER NUCLEAR STATION PRECIPITATION DATA FOR 2012 RAIN VERSION PC-1.0

MONTH OF JULY

PRECIPITATION INTENSITY - DURATION
(NUMBER OF OCCURRENCES)

AMOUNT INCHES	DURATION (HOURS) 1	6	12	18	24
.01	9	21	33	45	57
.02	6	18	30	42	54
.03	4	17	29	41	53
.04	4	14	26	38	50
.05	3	11	17	23	29
.07	3	11	17	23	29
.10	3	11	17	23	29
.15	1	8	14	20	26
.20	0	6	12	18	24
.25	0	6	12	18	24
.30	0	6	12	18	24
.35	0	5	11	17	23
.40	0	1	7	13	19
.45	0	1	7	13	19
.50	0	1	7	13	19
.60	0	0	0	0	0
.70	0	0	0	0	0
.80	0	0	0	0	0
.90	0	0	0	0	0
1.00	0	0	0	0	0
1.10	0	0	0	0	0
1.20	0	0	0	0	0
1.30	0	0	0	0	0
1.40	0	0	0	0	0
1.50	0	0	0	0	0
1.60	0	0	0	0	0
1.70	0	0	0	0	0
1.80	0	0	0	0	0
1.90	0	0	0	0	0
2.00	0	0	0	0	0

ENTRIES INDICATE NUMBER OF DURATION PERIODS WITH RAINFALL GREATER THAN OR EQUAL TO AMOUNT SHOWN

NPPD-COOPER NUCLEAR STATION PRECIPITATION DATA FOR 2012 RAIN VERSION PC-1.0

YR	MON	DAY	1AM 1PM	2AM 2PM	3AM 3PM	4AM 4PM	5AM 5PM	6AM 6PM	7AM 7PM	8AM 8PM	9AM 9PM	10AM 10PM	11AM 11PM	12N 12MDNT	TOTAL
12	8	1	.00	.00	.00	.00	.00	.00	.00	.00	.00	.00	.00	.00	
			.00	.00	.00	.00	.00	.00	.00	.00	.00	.00	.00	.00	.00
12	8	2	.00	.00	.00	.00	.02	.04	.03	.00	.00	.00	.00	.00	
			.00	.00	.00	.00	.00	.00	.00	.00	.00	.00	.00	.00	.09
12	8	3	.00	.00	.00	.00	.00	.00	.00	.00	.00	.00	.00	.00	
			.00	.00	.00	.00	.00	.00	.00	.00	.00	.00	.00	.00	.00
12	8	4	.00	.00	.00	.00	.00	.00	.00	.65	.00	.00	.00	.00	
			.00	.00	.00	.00	.00	.00	.00	.00	.00	.00	.00	.00	.65
12	8	5	.00	.00	.00	.00	.00	.00	.00	.00	.00	.00	.00	.00	
			.00	.00	.00	.00	.00	.00	.00	.00	.00	.00	.00	.00	.00
12	8	6	.00	.00	.00	.00	.00	.00	.00	.00	.00	.00	.00	.00	
			.00	.00	.00	.00	.00	.00	.00	.00	.00	.00	.00	.00	.00
12	8	7	.00	.00	.00	.00	.00	.00	.00	.00	.00	.00	.00	.00	
			.00	.00	.00	.00	.00	.00	.00	.00	.00	.00	.00	.00	.00
12	8	8	.00	.00	.00	.00	.00	.00	.00	.00	.00	.00	.00	.00	
			.00	.00	.00	.00	.03	.00	.01	.01	.00	.00	.00	.00	.05
12	8	9	.00	.00	.00	.00	.00	.00	.00	.00	.00	.00	.00	.00	
			.00	.00	.00	.00	.00	.00	.00	.00	.00	.00	.00	.00	.00
12	8	10	.00	.00	.00	.00	.00	.00	.00	.00	.00	.00	.00	.00	
			.00	.00	.00	.00	.00	.00	.00	.00	.00	.00	.00	.00	.00
12	8	11	.00	.00	.00	.00	.00	.00	.00	.00	.00	.00	.00	.00	
			.00	.00	.00	.00	.00	.00	.00	.00	.02	.00	.00	.00	.02
12	8	12	.00	.00	.00	.00	.00	.00	.00	.00	.00	.00	.00	.00	
			.00	.00	.00	.00	.00	.00	.00	.00	.00	.00	.00	.00	.00
12	8	13	.00	.00	.00	.00	.00	.00	.00	.00	.00	.00	.00	.00	
			.00	.00	.00	.00	.00	.00	.00	.00	.00	.00	.00	.00	.00
12	8	14	.00	.00	.00	.00	.00	.00	.00	.00	.00	.00	.00	.00	
			.00	.00	.00	.00	.00	.00	.00	.00	.00	.00	.00	.00	.00
12	8	15	.00	.00	.00	.00	.00	.00	.00	.00	.00	.00	.00	.00	
			.00	.00	.00	.00	.00	.00	.00	.00	.00	.00	.00	.00	.00
12	8	16	.00	.00	.00	.00	.00	.00	.00	.00	.00	.00	.00	.00	
			.00	.00	.00	.00	.00	.00	.00	.00	.00	.00	.00	.00	.00
12	8	17	.00	.00	.00	.00	.00	.00	.00	.00	.00	.00	.00	.00	
			.00	.00	.00	.00	.00	.00	.00	.00	.00	.00	.00	.00	.00

NPPD-COOPER NUCLEAR STATION PRECIPITATION DATA FOR 2012 RAIN VERSION PC-1.0

YR	MON	DAY	1AM 1PM	2AM 2PM	3AM 3PM	4AM 4PM	5AM 5PM	6AM 6PM	7AM 7PM	8AM 8PM	9AM 9PM	10AM 10PM	11AM 11PM	12N 12MDNT	TOTAL
12	8	18	.00	.00	.00	.00	.00	.00	.00	.00	.00	.00	.00	.00	
			.00	.00	.00	.00	.00	.00	.00	.00	.00	.00	.00	.00	.00
12	8	19	.00	.00	.00	.00	.00	.00	.00	.00	.00	.00	.00	.00	
			.00	.00	.00	.00	.00	.00	.00	.00	.00	.00	.00	.00	.00
12	8	20	.00	.00	.00	.00	.00	.00	.00	.00	.00	.00	.00	.00	
			.00	.00	.00	.00	.00	.00	.00	.00	.00	.00	.00	.00	.00
12	8	21	.00	.00	.00	.00	.00	.00	.00	.00	.00	.00	.00	.00	
			.00	.00	.00	.00	.00	.00	.00	.00	.00	.00	.00	.00	.00
12	8	22	.00	.00	.00	.00	.00	.00	.00	.00	.00	.00	.00	.00	
			.00	.00	.00	.00	.00	.00	.00	.00	.00	.00	.00	.00	.00
12	8	23	.00	.00	.00	.00	.00	.00	.00	.00	.00	.00	.00	.00	
			.00	.00	.00	.00	.00	.00	.00	.00	.00	.00	.00	.00	.00
12	8	24	.00	.00	.00	.00	.00	.00	.00	.00	.00	.00	.00	.00	
			.00	.00	.00	.00	.00	.00	.00	.00	.03	.06	.00	.04	.13
12	8	25	.02	.00	.00	.00	.00	.00	.00	.00	.00	.19	.05	.04	
			.01	.02	.01	.02	.04	.17	.73	.84	.18	.05	.01	.00	2.38
12	8	26	.01	.00	.00	.00	.00	.00	.00	.00	.00	.00	.00	.00	
			.00	.00	.00	.00	.00	.00	.00	.00	.00	.00	.00	.00	.01
12	8	27	.00	.00	.00	.00	.00	.00	.00	.00	.00	.00	.00	.00	
			.00	.00	.00	.00	.00	.00	.00	.00	.00	.00	.00	.00	.00
12	8	28	.00	.00	.00	.00	.00	.00	.00	.00	.00	.00	.00	.00	
			.00	.00	.00	.00	.00	.00	.00	.00	.00	.00	.00	.00	.00
12	8	29	.00	.00	.00	.00	.00	.00	.00	.00	.00	.00	.00	.00	
			.00	.00	.00	.00	.00	.00	.00	.00	.00	.00	.00	.00	.00
12	8	30	.00	.00	.00	.00	.00	.00	.00	.00	.00	.00	.00	.00	
			.00	.00	.00	.00	.00	.00	.00	.00	.00	.00	.00	.00	.00
12	8	31	.00	.00	.00	.00	.00	.00	.00	.00	.00	.00	.00	.00	
			.00	.00	.00	.00	.00	.00	.00	.00	.00	.00	.00	.00	.00

NPPD-COOPER NUCLEAR STATION PRECIPITATION DATA FOR 2012 RAIN VERSION PC-1.0

MONTH OF AUGUST

FOR ALL TEMPERATURES

TOTAL NUMBER OF HOURS - 744
NUMBER OF MISSING HOURS - 0
TOTAL HOURS OF PRECIPITATION - 27
TOTAL DAYS WITH PRECIPITATION - 7
TOTAL AMOUNT OF PRECIPITATION - 3.33 INCHES
MAXIMUM 1-HOUR PRECIPITATION - .84 INCHES
MAXIMUM DAILY PRECIPITATION - 2.38 INCHES

1 HOUR PERIOD IN MONTH WITH GREATEST AMOUNT PRECIPITATION STARTS DAY 25 HOUR 20 - .84 INCHES
6 HOUR PERIOD IN MONTH WITH GREATEST AMOUNT PRECIPITATION STARTS DAY 25 HOUR 17 - 2.01 INCHES
12 HOUR PERIOD IN MONTH WITH GREATEST AMOUNT PRECIPITATION STARTS DAY 25 HOUR 10 - 2.30 INCHES
18 HOUR PERIOD IN MONTH WITH GREATEST AMOUNT PRECIPITATION STARTS DAY 25 HOUR 10 - 2.37 INCHES
24 HOUR PERIOD IN MONTH WITH GREATEST AMOUNT PRECIPITATION STARTS DAY 24 HOUR 24 - 2.42 INCHES

FOR TEMPERATURES LESS THAN OR EQUAL TO 32 DEGREES

TOTAL NUMBER OF HOURS - 0
NUMBER OF MISSING HOURS - 0
TOTAL HOURS OF PRECIPITATION - 0
TOTAL DAYS WITH PRECIPITATION - 0
TOTAL AMOUNT OF PRECIPITATION - .00 INCHES
MAXIMUM 1-HOUR PRECIPITATION - .00 INCHES
MAXIMUM DAILY PRECIPITATION - .00 INCHES

NPPD-COOPER NUCLEAR STATION PRECIPITATION DATA FOR 2012 RAIN VERSION PC-1.0

MONTH OF AUGUST

PRECIPITATION INTENSITY - DURATION
(NUMBER OF OCCURRENCES)

AMOUNT INCHES	DURATION (HOURS) 1	6	12	18	24
.01	27	60	93	123	153
.02	21	57	90	120	150
.03	16	46	74	98	122
.04	13	42	70	94	118
.05	9	41	69	93	117
.07	6	35	59	77	95
.10	6	27	45	57	69
.15	6	24	43	56	68
.20	3	20	35	47	59
.25	3	19	35	47	59
.30	3	15	32	46	58
.35	3	13	27	45	57
.40	3	13	26	44	56
.45	3	13	26	39	54
.50	3	13	26	38	51
.60	3	13	25	37	50
.70	2	7	13	19	26
.80	1	7	13	19	25
.90	0	7	13	19	25
1.00	0	6	13	19	25
1.10	0	5	12	18	24
1.20	0	5	12	18	24
1.30	0	5	11	17	24
1.40	0	5	11	17	24
1.50	0	5	11	17	23
1.60	0	5	11	17	23
1.70	0	5	11	17	23
1.80	0	5	11	17	23
1.90	0	3	10	16	22
2.00	0	1	9	15	21

ENTRIES INDICATE NUMBER OF DURATION PERIODS WITH RAINFALL GREATER THAN OR EQUAL TO AMOUNT SHOWN

NPPD-COOPER NUCLEAR STATION PRECIPITATION DATA FOR 2012 RAIN VERSION PC-1.0

YR	MON	DAY	1AM 1PM	2AM 2PM	3AM 3PM	4AM 4PM	5AM 5PM	6AM 6PM	7AM 7PM	8AM 8PM	9AM 9PM	10AM 10PM	11AM 11PM	12N 12MDNT	TOTAL
12	9	1	.00	.00	.00	.00	.00	.00	.00	.00	.00	.00	.00	.00	
			.00	.00	.00	.00	.00	.00	.00	.00	.00	.00	.00	.00	.00
12	9	2	.00	.00	.00	.00	.00	.00	.00	.00	.00	.00	.00	.00	
			.00	.00	.00	.00	.00	.00	.00	.00	.00	.00	.00	.00	.00
12	9	3	.00	.00	.00	.00	.00	.00	.00	.00	.00	.00	.00	.00	
			.00	.00	.00	.00	.00	.00	.00	.00	.00	.00	.00	.00	.00
12	9	4	.00	.00	.00	.00	.00	.00	.00	.00	.00	.00	.00	.00	
			.00	.00	.00	.00	.00	.00	.00	.00	.00	.00	.00	.00	.00
12	9	5	.00	.00	.00	.00	.00	.00	.00	.00	.00	.00	.00	.00	
			.00	.00	.00	.00	.00	.00	.00	.00	.00	.00	.00	.00	.00
12	9	6	.00	.00	.00	.00	.00	.00	.00	.00	.00	.00	.00	.00	
			.00	.00	.00	.00	.00	.00	.00	.00	.00	.00	.00	.00	.00
12	9	7	.00	.00	.00	.00	.00	.00	.00	.00	.00	.00	.00	.02	
			.01	.00	.00	.00	.00	.00	.00	.00	.00	.00	.00	.00	.03
12	9	8	.00	.00	.00	.00	.00	.00	.00	.00	.00	.00	.00	.00	
			.00	.00	.00	.00	.00	.00	.00	.00	.00	.00	.00	.00	.00
12	9	9	.00	.00	.00	.00	.00	.00	.00	.00	.00	.00	.00	.00	
			.00	.00	.00	.00	.00	.00	.00	.00	.00	.00	.00	.00	.00
12	9	10	.00	.00	.00	.00	.00	.00	.00	.00	.00	.00	.00	.00	
			.00	.00	.00	.00	.00	.00	.00	.00	.00	.00	.00	.00	.00
12	9	11	.00	.00	.00	.00	.00	.00	.00	.00	.00	.00	.00	.00	
			.00	.00	.00	.00	.00	.00	.00	.00	.00	.00	.00	.00	.00
12	9	12	.00	.00	.00	.00	.00	.00	.00	.00	.00	.00	.00	.00	
			.00	.00	.00	.00	.00	.00	.00	.00	.00	.00	.00	.19	.19
12	9	13	.30	.14	.11	.14	.03	.04	.02	.02	.02	.00	.01	.00	
			.00	.00	.00	.00	.00	.00	.00	.00	.00	.00	.00	.00	.83
12	9	14	.00	.00	.00	.00	.00	.00	.00	.00	.00	.00	.00	.00	
			.00	.00	.00	.00	.00	.00	.00	.00	.00	.00	.00	.00	.00
12	9	15	.00	.00	.00	.00	.00	.00	.00	.00	.00	.00	.00	.00	
			.00	.00	.00	.00	.00	.00	.00	.00	.00	.00	.00	.00	.00
12	9	16	.00	.00	.00	.00	.00	.00	.00	.00	.00	.00	.00	.00	
			.00	.00	.00	.00	.00	.00	.00	.00	.00	.00	.00	.00	.00
12	9	17	.00	.00	.00	.00	.00	.00	.00	.00	.00	.00	.00	.00	
			.00	.00	.00	.00	.00	.00	.00	.00	.00	.00	.00	.00	.00

NPPD-COOPER NUCLEAR STATION PRECIPITATION DATA FOR 2012 RAIN VERSION PC-1.0

YR	MON	DAY	1AM 1PM	2AM 2PM	3AM 3PM	4AM 4PM	5AM 5PM	6AM 6PM	7AM 7PM	8AM 8PM	9AM 9PM	10AM 10PM	11AM 11PM	12N 12MDNT	TOTAL
12	9	18	.00	.00	.00	.00	.00	.00	.00	.00	.00	.00	.00	.00	
			.00	.00	.00	.00	.00	.00	.00	.00	.00	.00	.00	.00	.00
12	9	19	.00	.00	.00	.00	.00	.00	.00	.00	.00	.00	.00	.00	
			.00	.00	.00	.00	.00	.00	.00	.00	.00	.00	.00	.00	.00
12	9	20	.00	.00	.00	.00	.00	.00	.00	.00	.00	.00	.00	.00	
			.00	.00	.00	.00	.00	.00	.00	.00	.00	.00	.00	.00	.00
12	9	21	.00	.00	.00	.00	.00	.00	.00	.00	.00	.00	.00	.00	
			.00	.00	.00	.00	.00	.00	.00	.00	.00	.00	.00	.00	.00
12	9	22	.00	.00	.00	.00	.00	.00	.00	.00	.00	.00	.00	.00	
			.00	.00	.00	.00	.00	.00	.00	.00	.00	.00	.00	.00	.00
12	9	23	.00	.00	.00	.00	.00	.00	.00	.00	.00	.00	.00	.00	
			.00	.00	.00	.00	.00	.00	.00	.00	.00	.00	.00	.00	.00
12	9	24	.00	.00	.00	.00	.00	.00	.00	.00	.00	.00	.00	.00	
			.00	.00	.00	.00	.00	.00	.00	.00	.00	.00	.00	.00	.00
12	9	25	.00	.00	.00	.00	.00	.00	.00	.00	.00	.00	.00	.00	
			.00	.00	.00	.00	.00	.00	.00	.00	.00	.00	.00	.00	.00
12	9	26	.00	.00	.00	.00	.00	.00	.00	.00	.00	.00	.00	.00	
			.00	.00	.00	.00	.00	.00	.00	.00	.00	.00	.00	.00	.00
12	9	27	.00	.00	.00	.00	.00	.00	.00	.00	.00	.00	.00	.00	
			.00	.00	.00	.00	.00	.00	.00	.00	.00	.00	.00	.00	.00
12	9	28	.00	.00	.00	.00	.00	.00	.00	.00	.00	.00	.00	.00	
			.00	.00	.00	.00	.00	.00	.00	.00	.00	.00	.00	.00	.00
12	9	29	.00	.00	.00	.00	.00	.00	.00	.00	.00	.00	.00	.00	
			.00	.00	.00	.00	.00	.00	.00	.00	.00	.00	.00	.00	.00
12	9	30	.00	.00	.00	.00	.00	.00	.00	.00	.00	.00	.00	.00	
			.00	.00	.00	.00	.00	.00	.00	.00	.00	.00	.00	.00	.00

NPPD-COOPER NUCLEAR STATION PRECIPITATION DATA FOR 2012 RAIN VERSION PC-1.0

MONTH OF SEPTEMBER

FOR ALL TEMPERATURES

TOTAL NUMBER OF HOURS - 720
NUMBER OF MISSING HOURS - 0
TOTAL HOURS OF PRECIPITATION - 13
TOTAL DAYS WITH PRECIPITATION - 3
TOTAL AMOUNT OF PRECIPITATION - 1.05 INCHES
MAXIMUM 1-HOUR PRECIPITATION - .30 INCHES
MAXIMUM DAILY PRECIPITATION - .83 INCHES

1 HOUR PERIOD IN MONTH WITH GREATEST AMOUNT PRECIPITATION STARTS DAY 13 HOUR 1 - .30 INCHES
6 HOUR PERIOD IN MONTH WITH GREATEST AMOUNT PRECIPITATION STARTS DAY 12 HOUR 24 - .91 INCHES
12 HOUR PERIOD IN MONTH WITH GREATEST AMOUNT PRECIPITATION STARTS DAY 12 HOUR 24 - 1.02 INCHES
18 HOUR PERIOD IN MONTH WITH GREATEST AMOUNT PRECIPITATION STARTS DAY 12 HOUR 24 - 1.02 INCHES
24 HOUR PERIOD IN MONTH WITH GREATEST AMOUNT PRECIPITATION STARTS DAY 12 HOUR 24 - 1.02 INCHES

FOR TEMPERATURES LESS THAN OR EQUAL TO 32 DEGREES

TOTAL NUMBER OF HOURS - 0
NUMBER OF MISSING HOURS - 0
TOTAL HOURS OF PRECIPITATION - 0
TOTAL DAYS WITH PRECIPITATION - 0
TOTAL AMOUNT OF PRECIPITATION - .00 INCHES
MAXIMUM 1-HOUR PRECIPITATION - .00 INCHES
MAXIMUM DAILY PRECIPITATION - .00 INCHES

NPPD-COOPER NUCLEAR STATION PRECIPITATION DATA FOR 2012 RAIN VERSION PC-1.0

MONTH OF SEPTEMBER

PRECIPITATION INTENSITY - DURATION
(NUMBER OF OCCURRENCES)

AMOUNT INCHES	DURATION (HOURS) 1	6	12	18	24
.01	13	24	36	48	60
.02	11	21	33	45	57
.03	7	20	32	44	56
.04	6	14	20	26	32
.05	5	14	20	26	32
.07	5	13	19	25	31
.10	5	12	18	24	30
.15	2	10	16	22	28
.20	1	9	15	21	27
.25	1	9	15	21	27
.30	1	8	14	20	26
.35	0	8	14	20	26
.40	0	7	13	19	25
.45	0	7	13	19	25
.50	0	5	12	18	24
.60	0	5	11	17	23
.70	0	4	10	16	22
.80	0	2	9	15	21
.90	0	1	7	13	19
1.00	0	0	3	9	15
1.10	0	0	0	0	0
1.20	0	0	0	0	0
1.30	0	0	0	0	0
1.40	0	0	0	0	0
1.50	0	0	0	0	0
1.60	0	0	0	0	0
1.70	0	0	0	0	0
1.80	0	0	0	0	0
1.90	0	0	0	0	0
2.00	0	0	0	0	0

ENTRIES INDICATE NUMBER OF DURATION PERIODS WITH RAINFALL GREATER THAN OR EQUAL TO AMOUNT SHOWN

NPPD-COOPER NUCLEAR STATION PRECIPITATION DATA FOR 2012 RAIN VERSION PC-1.0

JUL-SEP INDEX

FOR ALL TEMPERATURES

TOTAL NUMBER OF HOURS - 2208
NUMBER OF MISSING HOURS - 0
TOTAL HOURS OF PRECIPITATION - 49
TOTAL DAYS WITH PRECIPITATION - 13
TOTAL AMOUNT OF PRECIPITATION - 4.94 INCHES
MAXIMUM 1-HOUR PRECIPITATION - .84 INCHES
MAXIMUM DAILY PRECIPITATION - 2.38 INCHES

1 HOUR PERIOD IN MONTH WITH GREATEST AMOUNT PRECIPITATION STARTS MONTH 8 DAY 25 HOUR 20 - .84 INCHES
6 HOUR PERIOD IN MONTH WITH GREATEST AMOUNT PRECIPITATION STARTS MONTH 8 DAY 25 HOUR 17 - 2.01 INCHES
12 HOUR PERIOD IN MONTH WITH GREATEST AMOUNT PRECIPITATION STARTS MONTH 8 DAY 25 HOUR 10 - 2.30 INCHES
18 HOUR PERIOD IN MONTH WITH GREATEST AMOUNT PRECIPITATION STARTS MONTH 8 DAY 25 HOUR 10 - 2.37 INCHES
24 HOUR PERIOD IN MONTH WITH GREATEST AMOUNT PRECIPITATION STARTS MONTH 8 DAY 24 HOUR 24 - 2.42 INCHES

FOR TEMPERATURES LESS THAN OR EQUAL TO 32 DEGREES

TOTAL NUMBER OF HOURS - 0
NUMBER OF MISSING HOURS - 0
TOTAL HOURS OF PRECIPITATION - 0
TOTAL DAYS WITH PRECIPITATION - 0
TOTAL AMOUNT OF PRECIPITATION - .00 INCHES
MAXIMUM 1-HOUR PRECIPITATION - .00 INCHES
MAXIMUM DAILY PRECIPITATION - .00 INCHES

NPPD-COOPER NUCLEAR STATION PRECIPITATION DATA FOR 2012 RAIN VERSION PC-1.0

JUL-SEP INDEX

PRECIPITATION INTENSITY - DURATION
(NUMBER OF OCCURRENCES)

AMOUNT INCHES	DURATION (HOURS) 1	6	12	18	24
.01	49	105	162	216	270
.02	38	96	153	207	261
.03	27	83	135	183	231
.04	23	70	116	158	200
.05	17	66	106	142	178
.07	14	59	95	125	155
.10	14	50	80	104	128
.15	9	42	73	98	122
.20	4	35	62	86	110
.25	4	34	62	86	110
.30	4	29	58	84	108
.35	3	26	52	82	106
.40	3	21	46	76	100
.45	3	21	46	71	98
.50	3	19	45	69	94
.60	3	18	36	54	73
.70	2	11	23	35	48
.80	1	9	22	34	46
.90	0	8	20	32	44
1.00	0	6	16	28	40
1.10	0	5	12	18	24
1.20	0	5	12	18	24
1.30	0	5	11	17	24
1.40	0	5	11	17	24
1.50	0	5	11	17	23
1.60	0	5	11	17	23
1.70	0	5	11	17	23
1.80	0	5	11	17	23
1.90	0	3	10	16	22
2.00	0	1	9	15	21

NPPD-COOPER NUCLEAR STATION PRECIPITATION DATA FOR 2012 RAIN VERSION PC-1.0

YR	MON	DAY	1AM 1PM	2AM 2PM	3AM 3PM	4AM 4PM	5AM 5PM	6AM 6PM	7AM 7PM	8AM 8PM	9AM 9PM	10AM 10PM	11AM 11PM	12N 12MDNT	TOTAL
12	10	1	.00	.00	.00	.00	.00	.00	.00	.00	.00	.00	.00	.00	
			.00	.00	.00	.00	.00	.00	.00	.00	.00	.00	.00	.00	.00
12	10	2	.00	.00	.00	.00	.00	.00	.00	.00	.00	.00	.00	.00	
			.00	.00	.00	.00	.00	.00	.00	.00	.00	.00	.00	.00	.00
12	10	3	.00	.00	.00	.00	.00	.00	.00	.00	.00	.00	.00	.00	
			.00	.00	.00	.00	.00	.00	.00	.00	.00	.00	.00	.00	.00
12	10	4	.00	.00	.00	.00	.00	.00	.00	.01	.09	.01	.00	.00	
			.00	.00	.00	.00	.00	.00	.00	.00	.00	.00	.00	.00	.11
12	10	5	.00	.00	.00	.00	.00	.00	.00	.00	.00	.00	.00	.00	
			.00	.00	.00	.00	.00	.00	.00	.00	.00	.00	.00	.00	.00
12	10	6	.00	.00	.00	.00	.00	.00	.00	.00	.00	.00	.00	.00	
			.00	.00	.00	.00	.00	.00	.00	.00	.00	.00	.00	.00	.00
12	10	7	.00	.00	.00	.00	.00	.00	.00	.00	.00	.00	.00	.00	
			.00	.00	.00	.00	.00	.00	.00	.00	.00	.00	.00	.00	.00
12	10	8	.00	.00	.00	.00	.00	.00	.00	.00	.00	.00	.00	.00	
			.00	.00	.00	.00	.00	.00	.00	.00	.00	.00	.00	.00	.00
12	10	9	.00	.00	.00	.00	.00	.00	.00	.00	.00	.00	.00	.00	
			.00	.00	.00	.00	.00	.00	.00	.00	.00	.00	.00	.00	.00
12	10	10	.00	.00	.00	.00	.00	.00	.00	.00	.00	.00	.00	.00	
			.00	.00	.00	.00	.00	.00	.00	.00	.00	.00	.00	.00	.00
12	10	11	.00	.00	.00	.00	.00	.00	.00	.00	.00	.00	.00	.00	
			.00	.00	.00	.00	.00	.00	.00	.00	.00	.00	.00	.00	.00
12	10	12	.00	.00	.00	.00	.00	.00	.00	.00	.00	.00	.00	.00	
			.00	.00	.00	.00	.00	.00	.00	.00	.13	.02	.00	.00	.15
12	10	13	.02	.01	.05	.00	.12	.00	.00	.00	.02	.00	.00	.00	
			.00	.00	.04	.00	.00	.02	.01	.00	.27	.01	.00	.00	.57
12	10	14	.00	.00	.00	.03	.76	.19	.00	.00	.00	.00	.00	.00	
			.00	.00	.00	.00	.00	.00	.00	.00	.00	.00	.00	.00	.98
12	10	15	.00	.00	.00	.00	.00	.00	.00	.00	.00	.00	.00	.00	
			.00	.00	.00	.00	.00	.00	.00	.00	.00	.00	.00	.00	.00
12	10	16	.00	.00	.00	.00	.00	.00	.00	.00	.00	.00	.00	.00	
			.00	.00	.00	.00	.00	.00	.00	.00	.00	.00	.00	.00	.00
12	10	17	.00	.00	.00	.00	.00	.00	.00	.00	.01	.01	.00	.00	
			.00	.00	.00	.00	.00	.00	.00	.00	.00	.00	.00	.00	.02

NPPD-COOPER NUCLEAR STATION PRECIPITATION DATA FOR 2012 RAIN VERSION PC-1.0

YR	MON	DAY	1AM 1PM	2AM 2PM	3AM 3PM	4AM 4PM	5AM 5PM	6AM 6PM	7AM 7PM	8AM 8PM	9AM 9PM	10AM 10PM	11AM 11PM	12N 12MDNT	TOTAL
12	10	18	.00	.00	.00	.00	.00	.00	.00	.00	.00	.00	.00	.00	
			.00	.00	.00	.03	.03	.00	.00	.00	.00	.01	.02	.04	.13
12	10	19	.00	.00	.00	.00	.00	.00	.00	.01	.00	.00	.00	.00	
			.00	.00	.00	.00	.00	.00	.00	.00	.00	.00	.00	.00	.01
12	10	20	.00	.00	.00	.00	.00	.00	.00	.00	.00	.00	.00	.00	
			.00	.00	.00	.00	.00	.00	.00	.00	.00	.00	.00	.00	.00
12	10	21	.00	.00	.00	.00	.00	.00	.00	.00	.00	.00	.00	.00	
			.00	.00	.00	.00	.00	.00	.00	.00	.00	.00	.00	.00	.00
12	10	22	.00	.00	.00	.00	.00	.00	.00	.00	.00	.00	.00	.00	
			.00	.00	.00	.00	.00	.00	.00	.00	.00	.00	.00	.00	.00
12	10	23	.00	.00	.00	.00	.00	.00	.00	.00	.00	.00	.00	.00	
			.00	.00	.00	.00	.00	.00	.00	.00	.00	.00	.00	.00	.00
12	10	24	.00	.00	.00	.00	.00	.00	.00	.00	.00	.00	.00	.00	
			.00	.00	.00	.00	.00	.00	.00	.00	.00	.00	.00	.00	.00
12	10	25	.00	.03	.04	.03	.00	.00	.01	.00	.00	.00	.00	.00	
			.00	.00	.00	.00	.00	.00	.00	.00	.00	.00	.00	.00	.11
12	10	26	.00	.00	.00	.00	.00	.00	.00	.00	.00	.00	.00	.00	
			.00	.00	.00	.00	.00	.00	.00	.00	.00	.00	.00	.00	.00
12	10	27	.00	.00	.00	.00	.00	.00	.00	.00	.00	.00	.00	.00	
			.00	.00	.00	.00	.00	.00	.00	.00	.00	.00	.00	.00	.00
12	10	28	.00	.00	.00	.00	.00	.00	.00	.00	.00	.00	.00	.00	
			.00	.00	.00	.00	.00	.00	.00	.00	.00	.00	.00	.00	.00
12	10	29	.00	.00	.00	.00	.00	.00	.00	.00	.00	.00	.00	.00	
			.00	.00	.00	.00	.00	.00	.00	.00	.00	.00	.00	.00	.00
12	10	30	.00	.00	.00	.00	.00	.00	.00	.00	.00	.00	.00	.00	
			.00	.00	.00	.00	.00	.00	.00	.00	.00	.00	.00	.00	.00
12	10	31	.00	.00	.00	.00	.00	.00	.00	.00	.00	.00	.00	.00	
			.00	.00	.00	.00	.00	.00	.00	.00	.00	.00	.00	.00	.00

NPPD-COOPER NUCLEAR STATION PRECIPITATION DATA FOR 2012 RAIN VERSION PC-1.0

MONTH OF OCTOBER

FOR ALL TEMPERATURES

TOTAL NUMBER OF HOURS - 744
NUMBER OF MISSING HOURS - 0
TOTAL HOURS OF PRECIPITATION - 30
TOTAL DAYS WITH PRECIPITATION - 8
TOTAL AMOUNT OF PRECIPITATION - 2.08 INCHES
MAXIMUM 1-HOUR PRECIPITATION - .76 INCHES
MAXIMUM DAILY PRECIPITATION - .98 INCHES

1 HOUR PERIOD IN MONTH WITH GREATEST AMOUNT PRECIPITATION STARTS DAY 14 HOUR 5 - .76 INCHES
6 HOUR PERIOD IN MONTH WITH GREATEST AMOUNT PRECIPITATION STARTS DAY 14 HOUR 4 - .98 INCHES
12 HOUR PERIOD IN MONTH WITH GREATEST AMOUNT PRECIPITATION STARTS DAY 13 HOUR 19 - 1.27 INCHES
18 HOUR PERIOD IN MONTH WITH GREATEST AMOUNT PRECIPITATION STARTS DAY 13 HOUR 15 - 1.33 INCHES
24 HOUR PERIOD IN MONTH WITH GREATEST AMOUNT PRECIPITATION STARTS DAY 13 HOUR 9 - 1.35 INCHES

FOR TEMPERATURES LESS THAN OR EQUAL TO 32 DEGREES

TOTAL NUMBER OF HOURS - 21
NUMBER OF MISSING HOURS - 0
TOTAL HOURS OF PRECIPITATION - 0
TOTAL DAYS WITH PRECIPITATION - 0
TOTAL AMOUNT OF PRECIPITATION - .00 INCHES
MAXIMUM 1-HOUR PRECIPITATION - .00 INCHES
MAXIMUM DAILY PRECIPITATION - .00 INCHES

NPPD-COOPER NUCLEAR STATION PRECIPITATION DATA FOR 2012 RAIN VERSION PC-1.0

MONTH OF OCTOBER

PRECIPITATION INTENSITY - DURATION
(NUMBER OF OCCURRENCES)

AMOUNT INCHES	DURATION (HOURS) 1	6	12	18	24
.01	30	85	117	147	177
.02	20	71	102	132	162
.03	15	62	91	115	139
.04	10	58	89	113	137
.05	7	52	88	112	136
.07	6	45	81	106	130
.10	5	36	68	96	120
.15	3	22	40	50	56
.20	2	14	31	44	50
.25	2	12	24	42	48
.30	1	9	24	36	48
.35	1	6	21	36	48
.40	1	6	12	20	38
.45	1	6	12	20	32
.50	1	6	12	18	31
.60	1	6	12	18	24
.70	1	6	12	18	24
.80	0	5	12	18	24
.90	0	5	12	18	24
1.00	0	0	4	10	16
1.10	0	0	4	10	16
1.20	0	0	3	9	15
1.30	0	0	0	3	9
1.40	0	0	0	0	0
1.50	0	0	0	0	0
1.60	0	0	0	0	0
1.70	0	0	0	0	0
1.80	0	0	0	0	0
1.90	0	0	0	0	0
2.00	0	0	0	0	0

ENTRIES INDICATE NUMBER OF DURATION PERIODS WITH RAINFALL GREATER THAN OR EQUAL TO AMOUNT SHOWN

NPPD-COOPER NUCLEAR STATION PRECIPITATION DATA FOR 2012 RAIN VERSION PC-1.0

YR	MON	DAY	1AM 1PM	2AM 2PM	3AM 3PM	4AM 4PM	5AM 5PM	6AM 6PM	7AM 7PM	8AM 8PM	9AM 9PM	10AM 10PM	11AM 11PM	12N 12MDNT	TOTAL
12	11	1	.00	.00	.00	.00	.00	.00	.00	.00	.00	.00	.00	.00	
			.00	.00	.00	.00	.00	.00	.00	.00	.00	.00	.00	.00	.00
12	11	2	.00	.00	.00	.00	.00	.00	.00	.00	.00	.00	.00	.00	
			.00	.00	.00	.00	.00	.00	.00	.00	.00	.00	.00	.00	.00
12	11	3	.00	.00	.00	.00	.00	.00	.00	.00	.00	.00	.00	.00	
			.00	.00	.00	.00	.00	.00	.00	.00	.00	.00	.00	.00	.00
12	11	4	.00	.00	.00	.00	.00	.00	.00	.00	.00	.00	.00	.00	
			.00	.00	.00	.00	.00	.00	.00	.00	.01	.01	.00	.01	.03
12	11	5	.00	.00	.00	.00	.00	.00	.00	.00	.00	.00	.00	.00	
			.00	.00	.00	.00	.00	.00	.00	.00	.00	.00	.00	.00	.00
12	11	6	.00	.00	.00	.00	.00	.00	.00	.00	.00	.00	.00	.00	
			.00	.00	.00	.00	.00	.00	.00	.00	.00	.00	.00	.00	.00
12	11	7	.00	.00	.00	.00	.00	.00	.00	.00	.00	.00	.00	.00	
			.00	.00	.00	.00	.00	.00	.00	.00	.00	.00	.00	.00	.00
12	11	8	.00	.00	.00	.00	.00	.00	.00	.00	.00	.00	.00	.00	
			.00	.00	.00	.00	.00	.00	.00	.00	.00	.00	.00	.00	.00
12	11	9	.00	.00	.00	.00	.00	.00	.00	.00	.00	.00	.00	.00	
			.00	.00	.00	.00	.00	.00	.00	.00	.00	.00	.00	.00	.00
12	11	10	.00	.00	.00	.00	.00	.00	.00	.00	.00	.00	.00	.00	
			.00	.00	.00	.00	.00	.00	.00	.00	.00	.00	.07	.21	.28
12	11	11	.23	.06	.01	.01	.02	.00	.00	.00	.00	.00	.00	.00	
			.00	.00	.00	.00	.00	.00	.00	.00	.00	.00	.00	.00	.33
12	11	12	.00	.00	.00	.00	.00	.00	.00	.00	.00	.00	.00	.00	
			.00	.00	.00	.00	.00	.00	.00	.00	.00	.00	.00	.00	.00
12	11	13	.00	.00	.00	.00	.00	.00	.00	.00	.00	.00	.00	.00	
			.00	.00	.00	.00	.00	.00	.00	.00	.00	.00	.00	.00	.00
12	11	14	.00	.00	.00	.00	.00	.00	.00	.00	.00	.00	.00	.00	
			.00	.00	.00	.00	.00	.00	.00	.00	.00	.00	.00	.00	.00
12	11	15	.00	.00	.00	.00	.00	.00	.00	.00	.00	.00	.00	.00	
			.00	.00	.00	.00	.00	.00	.00	.00	.00	.00	.00	.00	.00
12	11	16	.00	.00	.00	.00	.00	.00	.00	.00	.00	.00	.00	.00	
			.00	.00	.00	.00	.00	.00	.00	.00	.00	.00	.00	.00	.00
12	11	17	.00	.00	.00	.00	.00	.00	.00	.00	.00	.00	.00	.00	
			.00	.00	.00	.00	.00	.00	.00	.00	.00	.00	.00	.00	.00

NPPD-COOPER NUCLEAR STATION PRECIPITATION DATA FOR 2012 RAIN VERSION PC-1.0

YR	MON	DAY	1AM 1PM	2AM 2PM	3AM 3PM	4AM 4PM	5AM 5PM	6AM 6PM	7AM 7PM	8AM 8PM	9AM 9PM	10AM 10PM	11AM 11PM	12N 12MDNT	TOTAL
12	11	18	.00	.00	.00	.00	.00	.00	.00	.00	.00	.00	.00	.00	
			.00	.00	.00	.00	.00	.00	.00	.00	.00	.00	.00	.00	.00
12	11	19	.00	.00	.00	.00	.00	.00	.00	.00	.00	.00	.00	.00	
			.00	.00	.00	.00	.00	.00	.00	.00	.00	.00	.00	.00	.00
12	11	20	.00	.00	.00	.00	.00	.00	.00	.00	.00	.00	.00	.00	
			.00	.00	.00	.00	.00	.00	.00	.00	.00	.00	.00	.00	.00
12	11	21	.00	.00	.00	.00	.00	.00	.00	.00	.00	.00	.00	.00	
			.00	.00	.00	.00	.00	.00	.00	.00	.00	.00	.00	.00	.00
12	11	22	.00	.00	.00	.00	.00	.00	.00	.00	.00	.00	.00	.00	
			.00	.00	.00	.00	.00	.00	.00	.00	.00	.00	.00	.00	.00
12	11	23	.00	.00	.00	.00	.00	.00	.00	.00	.00	.00	.00	.00	
			.00	.00	.00	.00	.00	.00	.00	.00	.00	.00	.00	.00	.00
12	11	24	.00	.00	.00	.00	.00	.00	.00	.00	.00	.00	.00	.00	
			.00	.00	.00	.00	.00	.00	.00	.00	.00	.00	.00	.00	.00
12	11	25	.00	.00	.00	.00	.00	.00	.00	.00	.00	.00	.00	.00	
			.00	.00	.00	.00	.00	.00	.00	.00	.00	.00	.00	.00	.00
12	11	26	.00	.00	.00	.00	.00	.00	.00	.00	.00	.00	.00	.00	
			.00	.00	.00	.00	.00	.00	.00	.00	.00	.00	.00	.00	.00
12	11	27	.00	.00	.00	.00	.00	.00	.00	.00	.00	.00	.00	.00	
			.00	.00	.00	.00	.00	.00	.00	.00	.00	.00	.00	.00	.00
12	11	28	.00	.00	.00	.00	.00	.00	.00	.00	.00	.00	.00	.00	
			.00	.00	.00	.00	.00	.00	.00	.00	.00	.00	.00	.00	.00
12	11	29	.00	.00	.00	.00	.00	.00	.00	.00	.00	.00	.00	.00	
			.00	.00	.00	.00	.00	.00	.00	.00	.00	.00	.00	.00	.00
12	11	30	.00	.00	.00	.00	.00	.00	.00	.00	.00	.00	.00	.00	
			.00	.00	.00	.00	.00	.00	.00	.00	.00	.00	.00	.00	.00

NPPD-COOPER NUCLEAR STATION PRECIPITATION DATA FOR 2012 RAIN VERSION PC-1.0

MONTH OF NOVEMBER

FOR ALL TEMPERATURES

TOTAL NUMBER OF HOURS - 720
NUMBER OF MISSING HOURS - 0
TOTAL HOURS OF PRECIPITATION - 10
TOTAL DAYS WITH PRECIPITATION - 3
TOTAL AMOUNT OF PRECIPITATION - .64 INCHES
MAXIMUM 1-HOUR PRECIPITATION - .23 INCHES
MAXIMUM DAILY PRECIPITATION - .33 INCHES

1 HOUR PERIOD IN MONTH WITH GREATEST AMOUNT PRECIPITATION STARTS DAY 11 HOUR 1 - .23 INCHES
6 HOUR PERIOD IN MONTH WITH GREATEST AMOUNT PRECIPITATION STARTS DAY 10 HOUR 23 - .59 INCHES
12 HOUR PERIOD IN MONTH WITH GREATEST AMOUNT PRECIPITATION STARTS DAY 10 HOUR 23 - .61 INCHES
18 HOUR PERIOD IN MONTH WITH GREATEST AMOUNT PRECIPITATION STARTS DAY 10 HOUR 23 - .61 INCHES
24 HOUR PERIOD IN MONTH WITH GREATEST AMOUNT PRECIPITATION STARTS DAY 10 HOUR 23 - .61 INCHES

FOR TEMPERATURES LESS THAN OR EQUAL TO 32 DEGREES

TOTAL NUMBER OF HOURS - 108
NUMBER OF MISSING HOURS - 0
TOTAL HOURS OF PRECIPITATION - 0
TOTAL DAYS WITH PRECIPITATION - 0
TOTAL AMOUNT OF PRECIPITATION - .00 INCHES
MAXIMUM 1-HOUR PRECIPITATION - .00 INCHES
MAXIMUM DAILY PRECIPITATION - .00 INCHES

NPPD-COOPER NUCLEAR STATION PRECIPITATION DATA FOR 2012 RAIN VERSION PC-1.0

MONTH OF NOVEMBER

PRECIPITATION INTENSITY - DURATION
(NUMBER OF OCCURRENCES)

AMOUNT INCHES	DURATION (HOURS) 1	6	12	18	24
.01	10	21	33	45	57
.02	5	18	30	42	54
.03	4	14	26	38	50
.04	4	10	16	22	28
.05	4	9	15	21	27
.07	3	9	15	21	27
.10	2	8	14	20	26
.15	2	7	13	19	25
.20	2	7	13	19	25
.25	0	7	13	19	25
.30	0	6	12	18	24
.35	0	5	11	17	23
.40	0	5	11	17	23
.45	0	5	11	17	23
.50	0	5	11	17	23
.60	0	0	6	12	18
.70	0	0	0	0	0
.80	0	0	0	0	0
.90	0	0	0	0	0
1.00	0	0	0	0	0
1.10	0	0	0	0	0
1.20	0	0	0	0	0
1.30	0	0	0	0	0
1.40	0	0	0	0	0
1.50	0	0	0	0	0
1.60	0	0	0	0	0
1.70	0	0	0	0	0
1.80	0	0	0	0	0
1.90	0	0	0	0	0
2.00	0	0	0	0	0

ENTRIES INDICATE NUMBER OF DURATION PERIODS WITH RAINFALL GREATER THAN OR EQUAL TO AMOUNT SHOWN

NPPD-COOPER NUCLEAR STATION PRECIPITATION DATA FOR 2012 RAIN VERSION PC-1.0

YR	MON	DAY	1AM 1PM	2AM 2PM	3AM 3PM	4AM 4PM	5AM 5PM	6AM 6PM	7AM 7PM	8AM 8PM	9AM 9PM	10AM 10PM	11AM 11PM	12N 12MDNT	TOTAL
12	12	1	.00	.00	.00	.00	.00	.00	.00	.00	.00	.00	.00	.00	
			.00	.00	.00	.00	.00	.00	.00	.00	.00	.00	.00	.00	.00
12	12	2	.00	.00	.00	.00	.00	.00	.00	.00	.00	.00	.00	.00	
			.00	.00	.00	.00	.00	.00	.00	.00	.00	.00	.00	.00	.00
12	12	3	.00	.00	.00	.00	.00	.00	.00	.00	.00	.00	.00	.00	
			.00	.00	.00	.00	.00	.00	.00	.00	.00	.00	.00	.00	.00
12	12	4	.00	.00	.00	.00	.00	.00	.00	.00	.00	.00	.00	.00	
			.00	.00	.00	.00	.00	.00	.00	.00	.00	.00	.00	.00	.00
12	12	5	.00	.00	.00	.00	.00	.00	.00	.00	.00	.00	.00	.00	
			.00	.00	.00	.00	.00	.00	.00	.00	.00	.00	.00	.00	.00
12	12	6	.00	.00	.00	.00	.00	.00	.00	.00	.00	.00	.00	.00	
			.00	.01	.00	.00	.00	.00	.00	.00	.00	.00	.00	.00	.01
12	12	7	.00	.00	.00	.00	.00	.00	.00	.00	.00	.00	.00	.00	
			.00	.00	.00	.00	.00	.00	.00	.00	.00	.00	.00	.00	.00
12	12	8	.00	.00	.00	.00	.00	.00	.00	.00	.00	.00	.00	.00	
			.00	.00	.00	.00	.00	.00	.00	.00	.00	.00	.00	.00	.00
12	12	9	.00	.00	.00	.00	.00	.00	.01	.00	.00	.00	.00	.00	
			.00	.00	.00	.00	.00	.00	.00	.00	.00	.00	.00	.00	.01
12	12	10	.00	.00	.00	.00	.00	.00	.00	.00	.00	.00	.00	.00	
			.00	.00	.00	.00	.00	.00	.00	.00	.00	.00	.00	.00	.00
12	12	11	.00	.00	.00	.00	.00	.00	.00	.00	.00	.00	.00	.00	
			.00	.00	.00	.00	.00	.00	.00	.00	.00	.00	.00	.00	.00
12	12	12	.00	.00	.00	.00	.00	.00	.00	.00	.00	.00	.00	.00	
			.00	.00	.00	.00	.00	.00	.00	.00	.00	.00	.00	.00	.00
12	12	13	.00	.00	.00	.00	.00	.00	.00	.00	.00	.00	.00	.00	
			.00	.00	.00	.00	.00	.00	.00	.00	.00	.00	.00	.00	.00
12	12	14	.00	.00	.00	.00	.00	.00	.00	.00	.00	.00	.00	.00	
			.00	.00	.00	.00	.00	.00	.00	.00	.00	.00	.03	.15	.18
12	12	15	.09	.05	.01	.00	.00	.00	.00	.00	.00	.00	.00	.00	
			.00	.00	.00	.00	.00	.00	.00	.00	.00	.00	.00	.00	.15
12	12	16	.00	.00	.00	.00	.00	.00	.00	.00	.00	.00	.00	.00	
			.00	.00	.00	.00	.00	.00	.00	.00	.00	.00	.00	.00	.00
12	12	17	.00	.00	.00	.00	.00	.00	.00	.00	.00	.00	.00	.00	
			.00	.00	.00	.00	.00	.00	.00	.00	.00	.00	.00	.00	.00

NPPD-COOPER NUCLEAR STATION PRECIPITATION DATA FOR 2012 RAIN VERSION PC-1.0

YR	MON	DAY	1AM 1PM	2AM 2PM	3AM 3PM	4AM 4PM	5AM 5PM	6AM 6PM	7AM 7PM	8AM 8PM	9AM 9PM	10AM 10PM	11AM 11PM	12N 12MDNT	TOTAL
12	12	18	.00	.00	.00	.00	.00	.00	.00	.00	.00	.00	.00	.00	
			.00	.00	.00	.00	.00	.00	.00	.00	.00	.00	.00	.00	.00
12	12	19	.00	.00	.00	.00	.00	.00	.00	.00	.00	.00	.00	.00	
			.00	.00	.00	.00	.01	.00	.00	.00	.00	.00	.00	.00	.01
12	12	20	.00	.00	.00	.00	.00	.00	.00	.00	.00	.00	.00	.00	
			.00	.00	.00	.00	.00	.00	.00	.00	.00	.00	.00	.00	.00
12	12	21	.00	.00	.00	.00	.00	.00	.00	.00	.00	.00	.00	.00	
			.00	.00	.00	.00	.00	.00	.00	.00	.00	.00	.00	.00	.00
12	12	22	.00	.00	.00	.00	.00	.00	.00	.00	.00	.00	.00	.00	
			.00	.00	.00	.00	.00	.00	.00	.00	.00	.00	.00	.00	.00
12	12	23	.00	.00	.00	.00	.00	.00	.00	.00	.00	.00	.00	.00	
			.00	.00	.00	.00	.00	.00	.00	.00	.00	.00	.00	.00	.00
12	12	24	.00	.00	.00	.00	.00	.00	.00	.00	.00	.00	.00	.00	
			.00	.00	.00	.00	.00	.00	.00	.00	.00	.00	.00	.00	.00
12	12	25	.00	.00	.00	.00	.00	.00	.00	.00	.00	.00	.00	.00	
			.00	.00	.00	.00	.00	.00	.00	.00	.00	.00	.00	.00	.00
12	12	26	.00	.00	.00	.00	.00	.00	.00	.00	.00	.00	.00	.00	
			.00	.00	.00	.00	.00	.00	.00	.00	.00	.00	.00	.00	.00
12	12	27	.00	.00	.00	.00	.00	.00	.00	.00	.00	.00	.00	.00	
			.00	.00	.00	.00	.00	.00	.00	.00	.00	.00	.00	.00	.00
12	12	28	.00	.00	.00	.00	.00	.00	.00	.00	.00	.00	.00	.00	
			.00	.00	.00	.00	.00	.00	.00	.00	.00	.00	.00	.00	.00
12	12	29	.00	.00	.00	.00	.00	.00	.00	.00	.00	.00	.00	.00	
			.00	.00	.00	.00	.00	.00	.00	.00	.00	.00	.00	.00	.00
12	12	30	.00	.00	.00	.00	.00	.00	.00	.00	.00	.00	.00	.00	
			.00	.00	.00	.00	.00	.00	.00	.00	.00	.00	.00	.00	.00
12	12	31	.00	.00	.00	.00	.00	.00	.00	.00	.00	.00	.00	.00	
			.00	.00	.00	.00	.00	.00	.00	.00	.00	.00	.00	.00	.00

NPPD-COOPER NUCLEAR STATION PRECIPITATION DATA FOR 2012 RAIN VERSION PC-1.0

MONTH OF DECEMBER

FOR ALL TEMPERATURES

TOTAL NUMBER OF HOURS - 744
NUMBER OF MISSING HOURS - 0
TOTAL HOURS OF PRECIPITATION - 8
TOTAL DAYS WITH PRECIPITATION - 5
TOTAL AMOUNT OF PRECIPITATION - .36 INCHES
MAXIMUM 1-HOUR PRECIPITATION - .15 INCHES
MAXIMUM DAILY PRECIPITATION - .18 INCHES

1 HOUR PERIOD IN MONTH WITH GREATEST AMOUNT PRECIPITATION STARTS DAY 14 HOUR 24 - .15 INCHES
6 HOUR PERIOD IN MONTH WITH GREATEST AMOUNT PRECIPITATION STARTS DAY 14 HOUR 23 - .33 INCHES
12 HOUR PERIOD IN MONTH WITH GREATEST AMOUNT PRECIPITATION STARTS DAY 14 HOUR 23 - .33 INCHES
18 HOUR PERIOD IN MONTH WITH GREATEST AMOUNT PRECIPITATION STARTS DAY 14 HOUR 23 - .33 INCHES
24 HOUR PERIOD IN MONTH WITH GREATEST AMOUNT PRECIPITATION STARTS DAY 14 HOUR 23 - .33 INCHES

FOR TEMPERATURES LESS THAN OR EQUAL TO 32 DEGREES

TOTAL NUMBER OF HOURS - 350
NUMBER OF MISSING HOURS - 0
TOTAL HOURS OF PRECIPITATION - 0
TOTAL DAYS WITH PRECIPITATION - 0
TOTAL AMOUNT OF PRECIPITATION - .00 INCHES
MAXIMUM 1-HOUR PRECIPITATION - .00 INCHES
MAXIMUM DAILY PRECIPITATION - .00 INCHES

NPPD-COOPER NUCLEAR STATION PRECIPITATION DATA FOR 2012 RAIN VERSION PC-1.0

MONTH OF DECEMBER

PRECIPITATION INTENSITY - DURATION
(NUMBER OF OCCURRENCES)

AMOUNT INCHES	DURATION (HOURS) 1	6	12	18	24
.01	8	28	52	76	100
.02	4	9	15	21	27
.03	4	9	15	21	27
.04	3	8	14	20	26
.05	3	8	14	20	26
.07	2	7	13	19	25
.10	1	7	13	19	25
.15	1	7	13	19	25
.20	0	5	11	17	23
.25	0	5	11	17	23
.30	0	4	10	16	22
.35	0	0	0	0	0
.40	0	0	0	0	0
.45	0	0	0	0	0
.50	0	0	0	0	0
.60	0	0	0	0	0
.70	0	0	0	0	0
.80	0	0	0	0	0
.90	0	0	0	0	0
1.00	0	0	0	0	0
1.10	0	0	0	0	0
1.20	0	0	0	0	0
1.30	0	0	0	0	0
1.40	0	0	0	0	0
1.50	0	0	0	0	0
1.60	0	0	0	0	0
1.70	0	0	0	0	0
1.80	0	0	0	0	0
1.90	0	0	0	0	0
2.00	0	0	0	0	0

ENTRIES INDICATE NUMBER OF DURATION PERIODS WITH RAINFALL GREATER THAN OR EQUAL TO AMOUNT SHOWN

NPPD-COOPER NUCLEAR STATION PRECIPITATION DATA FOR 2012 RAIN VERSION PC-1.0

OCT-DEC INDEX

FOR ALL TEMPERATURES

```
TOTAL NUMBER OF HOURS - 2208
NUMBER OF MISSING HOURS -    0
TOTAL HOURS OF PRECIPITATION -   48
TOTAL DAYS WITH PRECIPITATION -   16
TOTAL AMOUNT OF PRECIPITATION -   3.08 INCHES
MAXIMUM 1-HOUR PRECIPITATION -    .76 INCHES
MAXIMUM DAILY PRECIPITATION -  .98 INCHES

1  HOUR PERIOD IN MONTH WITH GREATEST AMOUNT PRECIPITATION STARTS MONTH 10 DAY 14 HOUR  5 -    .76 INCHES
6  HOUR PERIOD IN MONTH WITH GREATEST AMOUNT PRECIPITATION STARTS MONTH 10 DAY 14 HOUR  4 -    .98 INCHES
12 HOUR PERIOD IN MONTH WITH GREATEST AMOUNT PRECIPITATION STARTS MONTH 10 DAY 13 HOUR 19 -   1.27 INCHES
18 HOUR PERIOD IN MONTH WITH GREATEST AMOUNT PRECIPITATION STARTS MONTH 10 DAY 13 HOUR 15 -   1.33 INCHES
24 HOUR PERIOD IN MONTH WITH GREATEST AMOUNT PRECIPITATION STARTS MONTH 10 DAY 13 HOUR  9 -   1.35 INCHES
```

FOR TEMPERATURES LESS THAN OR EQUAL TO 32 DEGREES

```
TOTAL NUMBER OF HOURS -  479
NUMBER OF MISSING HOURS -    0
TOTAL HOURS OF PRECIPITATION -    0
TOTAL DAYS WITH PRECIPITATION -    0
TOTAL AMOUNT OF PRECIPITATION -    .00 INCHES
MAXIMUM 1-HOUR PRECIPITATION -    .00 INCHES
MAXIMUM DAILY PRECIPITATION -  .00 INCHES
```

NPPD-COOPER NUCLEAR STATION PRECIPITATION DATA FOR 2012 RAIN VERSION PC-1.0

OCT-DEC INDEX

PRECIPITATION INTENSITY - DURATION
(NUMBER OF OCCURRENCES)

AMOUNT INCHES	DURATION (HOURS) 1	6	12	18	24
.01	48	134	202	268	334
.02	29	98	147	195	243
.03	23	85	132	174	216
.04	17	76	119	155	191
.05	14	69	117	153	189
.07	11	61	109	146	182
.10	8	51	95	135	171
.15	6	36	66	88	106
.20	4	26	55	80	98
.25	2	24	48	78	96
.30	1	19	46	70	94
.35	1	11	32	53	71
.40	1	11	23	37	61
.45	1	11	23	37	55
.50	1	11	23	35	54
.60	1	6	18	30	42
.70	1	6	12	18	24
.80	0	5	12	18	24
.90	0	5	12	18	24
1.00	0	0	4	10	16
1.10	0	0	4	10	16
1.20	0	0	3	9	15
1.30	0	0	0	3	9
1.40	0	0	0	0	0
1.50	0	0	0	0	0
1.60	0	0	0	0	0
1.70	0	0	0	0	0
1.80	0	0	0	0	0
1.90	0	0	0	0	0
2.00	0	0	0	0	0

NPPD-COOPER NUCLEAR STATION PRECIPITATION DATA FOR 2012 RAIN VERSION PC-1.0

JUL-DEC INDEX

FOR ALL TEMPERATURES

TOTAL NUMBER OF HOURS - 4416
NUMBER OF MISSING HOURS - 0
TOTAL HOURS OF PRECIPITATION - 97
TOTAL DAYS WITH PRECIPITATION - 29
TOTAL AMOUNT OF PRECIPITATION - 8.02 INCHES
MAXIMUM 1-HOUR PRECIPITATION - .84 INCHES
MAXIMUM DAILY PRECIPITATION - 2.38 INCHES

1 HOUR PERIOD IN MONTH WITH GREATEST AMOUNT PRECIPITATION STARTS MONTH 8 DAY 25 HOUR 20 - .84 INCHES
6 HOUR PERIOD IN MONTH WITH GREATEST AMOUNT PRECIPITATION STARTS MONTH 8 DAY 25 HOUR 17 - 2.01 INCHES
12 HOUR PERIOD IN MONTH WITH GREATEST AMOUNT PRECIPITATION STARTS MONTH 8 DAY 25 HOUR 10 - 2.30 INCHES
18 HOUR PERIOD IN MONTH WITH GREATEST AMOUNT PRECIPITATION STARTS MONTH 8 DAY 25 HOUR 10 - 2.37 INCHES
24 HOUR PERIOD IN MONTH WITH GREATEST AMOUNT PRECIPITATION STARTS MONTH 8 DAY 24 HOUR 24 - 2.42 INCHES

FOR TEMPERATURES LESS THAN OR EQUAL TO 32 DEGREES

TOTAL NUMBER OF HOURS - 479
NUMBER OF MISSING HOURS - 0
TOTAL HOURS OF PRECIPITATION - 0
TOTAL DAYS WITH PRECIPITATION - 0
TOTAL AMOUNT OF PRECIPITATION - .00 INCHES
MAXIMUM 1-HOUR PRECIPITATION - .00 INCHES
MAXIMUM DAILY PRECIPITATION - .00 INCHES

NPPD-COOPER NUCLEAR STATION PRECIPITATION DATA FOR 2012 RAIN VERSION PC-1.0

JUL-DEC INDEX

PRECIPITATION INTENSITY - DURATION
(NUMBER OF OCCURRENCES)

AMOUNT INCHES	DURATION (HOURS) 1	6	12	18	24
.01	97	239	364	484	604
.02	67	194	300	402	504
.03	50	168	267	357	447
.04	40	146	235	313	391
.05	31	135	223	295	367
.07	25	120	204	271	337
.10	22	101	175	239	299
.15	15	78	139	186	228
.20	8	61	117	166	208
.25	6	58	110	164	206
.30	5	48	104	154	202
.35	4	37	84	135	177
.40	4	32	69	113	161
.45	4	32	69	108	153
.50	4	30	68	104	148
.60	4	24	54	84	115
.70	3	17	35	53	72
.80	1	14	34	52	70
.90	0	13	32	50	68
1.00	0	6	20	38	56
1.10	0	5	16	28	40
1.20	0	5	15	27	39
1.30	0	5	11	20	33
1.40	0	5	11	17	24
1.50	0	5	11	17	23
1.60	0	5	11	17	23
1.70	0	5	11	17	23
1.80	0	5	11	17	23
1.90	0	3	10	16	22
2.00	0	1	9	15	21

NPPD-COOPER NUCLEAR STATION PRECIPITATION DATA FOR 2012 RAIN VERSION PC-1.0

JAN-DEC INDEX

FOR ALL TEMPERATURES

TOTAL NUMBER OF HOURS - 8784
NUMBER OF MISSING HOURS - 0
TOTAL HOURS OF PRECIPITATION - 260
TOTAL DAYS WITH PRECIPITATION - 66
TOTAL AMOUNT OF PRECIPITATION - 17.98 INCHES
MAXIMUM 1-HOUR PRECIPITATION - .84 INCHES
MAXIMUM DAILY PRECIPITATION - 2.38 INCHES

1 HOUR PERIOD IN MONTH WITH GREATEST AMOUNT PRECIPITATION STARTS MONTH 8 DAY 25 HOUR 20 - .84 INCHES
6 HOUR PERIOD IN MONTH WITH GREATEST AMOUNT PRECIPITATION STARTS MONTH 8 DAY 25 HOUR 17 - 2.01 INCHES
12 HOUR PERIOD IN MONTH WITH GREATEST AMOUNT PRECIPITATION STARTS MONTH 8 DAY 25 HOUR 10 - 2.30 INCHES
18 HOUR PERIOD IN MONTH WITH GREATEST AMOUNT PRECIPITATION STARTS MONTH 8 DAY 25 HOUR 10 - 2.37 INCHES
24 HOUR PERIOD IN MONTH WITH GREATEST AMOUNT PRECIPITATION STARTS MONTH 8 DAY 24 HOUR 24 - 2.42 INCHES

FOR TEMPERATURES LESS THAN OR EQUAL TO 32 DEGREES

TOTAL NUMBER OF HOURS - 1075
NUMBER OF MISSING HOURS - 0
TOTAL HOURS OF PRECIPITATION - 5
TOTAL DAYS WITH PRECIPITATION - 2
TOTAL AMOUNT OF PRECIPITATION - .06 INCHES
MAXIMUM 1-HOUR PRECIPITATION - .02 INCHES
MAXIMUM DAILY PRECIPITATION - .04 INCHES

NPPD-COOPER NUCLEAR STATION PRECIPITATION DATA FOR 2012 RAIN VERSION PC-1.0

JAN-DEC INDEX

PRECIPITATION INTENSITY - DURATION
(NUMBER OF OCCURRENCES)

AMOUNT INCHES	DURATION (HOURS) 1	6	12	18	24
.01	260	606	902	1176	1440
.02	175	512	789	1045	1286
.03	133	456	725	968	1192
.04	112	415	679	912	1125
.05	93	381	639	862	1066
.07	70	327	576	795	999
.10	49	273	502	703	892
.15	33	205	401	566	721
.20	18	159	330	490	635
.25	14	132	280	425	554
.30	10	108	250	387	517
.35	8	77	188	315	434
.40	8	65	143	238	338
.45	6	65	140	223	312
.50	5	57	132	209	297
.60	4	45	99	159	224
.70	3	36	78	125	175
.80	1	27	65	104	147
.90	0	23	60	96	134
1.00	0	9	34	64	95
1.10	0	5	16	28	46
1.20	0	5	15	27	42
1.30	0	5	11	20	33
1.40	0	5	11	17	24
1.50	0	5	11	17	23
1.60	0	5	11	17	23
1.70	0	5	11	17	23
1.80	0	5	11	17	23
1.90	0	3	10	16	22
2.00	0	1	9	15	21

JOINT FREQUENCY DISTRIBUTION TABLES

The tables presented in this section are results obtained from processing of the hourly meteorological data collected at the Cooper Nuclear Station (CNS). The joint frequency distribution (JFD) tables represent the frequency of occurrence, in number of observations, that a particular wind speed, wind direction, and stability category occurred simultaneously. On a quarterly and semiannual basis, the JFDs were produced for wind speed and wind direction by atmospheric stability corresponding to the seven Pasquill stability classes, and for wind speed and wind direction for all stability categories combined. Atmospheric stability was classified per Regulatory Guide 1.23, using the 100-meter to 10-meter temperature difference (delta T) for the 100-meter JFDs and the 60-meter to 10-meter delta T for the 10-meter JFDs.

JFDs of 10-Meter Wind vs. Delta T

January-March 2012

PROGRAM: JFD VERSION: PC-1.2
NPPD-COOPER NUCLEAR STATION JFD:10M WIND VS 10M DELTA T - JAN-MAR 2012
SITE IDENTIFIER: NPPD
DATA PERIOD EXAMINED: 1/ 1/12 - 3/31/12

*** JAN-MAR 2012 ***

STABILITY CLASS A

STABILITY BASED ON: DELTA T BETWEEN 60.0 AND 10.0 METERS
WIND MEASURED AT: 10.0 METERS
WIND THRESHOLD AT: 1.00 MPH
JOINT FREQUENCY DISTRIBUTION OF WIND SPEED AND DIRECTION IN HOURS AT 10.00 METERS

SPEED (MPH)	N	NNE	NE	ENE	E	ESE	SE	SSE	S	SSW	SW	WSW	W	WNW	NW	NNW	TOTAL
CALM																	0
1.01- 3.50	0	0	0	0	0	0	0	0	0	0	0	0	0	0	0	0	0
3.51- 7.50	0	0	0	0	0	0	1	0	0	0	0	1	0	0	0	0	2
7.51-12.50	2	1	0	0	0	1	6	2	6	7	1	0	2	0	0	0	28
12.51-18.50	1	0	0	0	0	0	1	8	10	7	2	2	2	1	1	1	36
18.51-24.00	0	0	0	0	0	0	0	0	13	3	4	1	0	0	5	4	30
>24.00	0	0	0	0	0	0	0	0	0	0	0	0	0	0	0	0	0
TOTAL	3	1	0	0	0	1	8	10	29	17	7	4	4	1	6	5	96

STABILITY CLASS B

STABILITY BASED ON: DELTA T BETWEEN 60.0 AND 10.0 METERS
WIND MEASURED AT: 10.0 METERS
WIND THRESHOLD AT: 1.00 MPH
JOINT FREQUENCY DISTRIBUTION OF WIND SPEED AND DIRECTION IN HOURS AT 10.00 METERS

SPEED (MPH)	N	NNE	NE	ENE	E	ESE	SE	SSE	S	SSW	SW	WSW	W	WNW	NW	NNW	TOTAL
CALM																	0
1.01- 3.50	0	0	0	0	0	0	0	0	0	0	0	0	0	0	0	0	0
3.51- 7.50	1	1	1	1	0	0	2	0	1	0	0	0	1	2	0	0	10
7.51-12.50	8	1	0	0	6	5	7	0	6	5	2	2	3	10	3	2	60
12.51-18.50	3	0	0	0	0	0	2	3	6	6	1	4	2	3	3	1	34
18.51-24.00	0	0	0	0	0	0	0	0	1	0	1	1	0	1	3	0	7
>24.00	0	0	0	0	0	0	0	0	0	0	0	0	1	0	0	0	1
TOTAL	12	2	1	1	6	5	11	3	14	11	4	7	7	16	9	3	112

PROGRAM: JFD VERSION: PC-1.2
NPPD-COOPER NUCLEAR STATION JFD:10M WIND VS 10M DELTA T - JAN-MAR 2012
SITE IDENTIFIER: NPPD
DATA PERIOD EXAMINED: 1/ 1/12 - 3/31/12

*** JAN-MAR 2012 ***

STABILITY CLASS C

STABILITY BASED ON: DELTA T BETWEEN 60.0 AND 10.0 METERS
WIND MEASURED AT: 10.0 METERS
WIND THRESHOLD AT: 1.00 MPH
JOINT FREQUENCY DISTRIBUTION OF WIND SPEED AND DIRECTION IN HOURS AT 10.00 METERS

SPEED (MPH)	N	NNE	NE	ENE	E	ESE	SE	SSE	S	SSW	SW	WSW	W	WNW	NW	NNW	TOTAL
CALM																	0
1.01- 3.50	0	0	0	0	0	0	2	1	0	0	0	0	0	0	0	0	3
3.51- 7.50	7	6	2	0	1	5	6	1	3	3	2	1	3	3	1	1	45
7.51-12.50	8	2	0	0	1	7	6	2	5	3	2	5	4	5	6	3	59
12.51-18.50	2	1	0	0	0	0	1	2	4	1	4	1	4	2	6	5	33
18.51-24.00	0	0	0	0	0	0	0	0	2	2	1	0	1	2	5	1	14
>24.00	0	0	0	0	0	0	0	0	0	0	0	0	3	0	0	2	5
TOTAL	17	9	2	0	2	12	15	6	14	9	9	7	15	12	18	12	159

STABILITY CLASS D

STABILITY BASED ON: DELTA T BETWEEN 60.0 AND 10.0 METERS
WIND MEASURED AT: 10.0 METERS
WIND THRESHOLD AT: 1.00 MPH
JOINT FREQUENCY DISTRIBUTION OF WIND SPEED AND DIRECTION IN HOURS AT 10.00 METERS

SPEED (MPH)	N	NNE	NE	ENE	E	ESE	SE	SSE	S	SSW	SW	WSW	W	WNW	NW	NNW	TOTAL
CALM																	0
1.01- 3.50	1	2	3	3	4	1	3	1	1	1	0	1	2	0	0	1	24
3.51- 7.50	14	18	5	9	14	23	26	12	19	10	5	8	6	12	10	9	200
7.51-12.50	49	4	5	4	21	12	26	18	35	16	17	6	10	22	28	32	305
12.51-18.50	24	5	5	1	10	1	21	37	29	13	8	9	5	25	46	46	285
18.51-24.00	1	0	0	1	0	0	1	5	6	0	0	4	2	4	22	19	65
>24.00	0	0	0	0	0	0	0	0	0	0	0	0	5	3	8	5	21
TOTAL	89	29	18	18	49	37	77	73	90	40	30	28	30	66	114	112	900

PROGRAM: JFD VERSION: PC-1.2
NPPD-COOPER NUCLEAR STATION JFD:10M WIND VS 10M DELTA T - JAN-MAR 2012
SITE IDENTIFIER: NPPD
DATA PERIOD EXAMINED: 1/ 1/12 - 3/31/12

*** JAN-MAR 2012 ***

STABILITY CLASS E

STABILITY BASED ON: DELTA T BETWEEN 60.0 AND 10.0 METERS
WIND MEASURED AT: 10.0 METERS
WIND THRESHOLD AT: 1.00 MPH
JOINT FREQUENCY DISTRIBUTION OF WIND SPEED AND DIRECTION IN HOURS AT 10.00 METERS

SPEED (MPH)	N	NNE	NE	ENE	E	ESE	SE	SSE	S	SSW	SW	WSW	W	WNW	NW	NNW	TOTAL
CALM																	0
1.01- 3.50	3	4	0	2	3	2	4	7	11	7	5	4	5	7	7	6	77
3.51- 7.50	15	9	5	4	5	10	12	19	33	12	6	3	7	17	15	9	181
7.51-12.50	2	6	0	0	1	0	11	20	37	28	23	9	13	15	28	7	200
12.51-18.50	0	1	1	0	1	0	4	9	1	10	7	1	3	2	6	0	46
18.51-24.00	0	0	0	0	0	0	0	0	1	0	0	0	0	0	0	0	1
>24.00	0	0	0	0	0	0	0	0	0	0	0	0	0	0	0	0	0
TOTAL	20	20	6	6	10	12	31	55	83	57	41	17	28	41	56	22	505

STABILITY CLASS F

STABILITY BASED ON: DELTA T BETWEEN 60.0 AND 10.0 METERS
WIND MEASURED AT: 10.0 METERS
WIND THRESHOLD AT: 1.00 MPH
JOINT FREQUENCY DISTRIBUTION OF WIND SPEED AND DIRECTION IN HOURS AT 10.00 METERS

SPEED (MPH)	N	NNE	NE	ENE	E	ESE	SE	SSE	S	SSW	SW	WSW	W	WNW	NW	NNW	TOTAL
CALM																	0
1.01- 3.50	4	5	1	2	0	4	5	17	22	9	9	6	3	1	6	3	97
3.51- 7.50	1	0	0	0	0	0	0	8	34	14	0	2	6	2	7	4	78
7.51-12.50	3	0	0	0	0	1	0	0	1	15	7	5	7	1	1	2	43
12.51-18.50	7	0	0	0	0	0	0	0	0	0	2	2	1	0	0	1	13
18.51-24.00	0	0	0	0	0	0	0	0	0	0	0	0	0	0	0	0	0
>24.00	0	0	0	0	0	0	0	0	0	0	0	0	0	0	0	0	0
TOTAL	15	5	1	2	0	5	5	25	57	38	18	15	17	4	14	10	231

PROGRAM: JFD VERSION: PC-1.2
NPPD-COOPER NUCLEAR STATION JFD:10M WIND VS 10M DELTA T - JAN-MAR 2012
SITE IDENTIFIER: NPPD
DATA PERIOD EXAMINED: 1/ 1/12 - 3/31/12

*** JAN-MAR 2012 ***

STABILITY CLASS G

STABILITY BASED ON: DELTA T BETWEEN 60.0 AND 10.0 METERS
WIND MEASURED AT: 10.0 METERS
WIND THRESHOLD AT: 1.00 MPH
JOINT FREQUENCY DISTRIBUTION OF WIND SPEED AND DIRECTION IN HOURS AT 10.00 METERS

SPEED (MPH)	N	NNE	NE	ENE	E	ESE	SE	SSE	S	SSW	SW	WSW	W	WNW	NW	NNW	TOTAL
CALM																	1
1.01- 3.50	14	5	3	2	3	6	9	28	29	15	4	4	1	3	3	9	138
3.51- 7.50	0	1	0	0	0	0	0	8	13	4	0	0	3	1	1	0	31
7.51-12.50	0	0	0	0	0	0	0	0	1	0	1	1	1	1	0	0	5
12.51-18.50	5	0	0	0	0	0	0	0	0	0	0	0	0	0	0	1	6
18.51-24.00	0	0	0	0	0	0	0	0	0	0	0	0	0	0	0	0	0
>24.00	0	0	0	0	0	0	0	0	0	0	0	0	0	0	0	0	0
TOTAL	19	6	3	2	3	6	9	36	43	19	5	5	5	5	4	10	181

STABILITY CLASS ALL

STABILITY BASED ON: DELTA T BETWEEN 60.0 AND 10.0 METERS
WIND MEASURED AT: 10.0 METERS
WIND THRESHOLD AT: 1.00 MPH
JOINT FREQUENCY DISTRIBUTION OF WIND SPEED AND DIRECTION IN HOURS AT 10.00 METERS

SPEED (MPH)	N	NNE	NE	ENE	E	ESE	SE	SSE	S	SSW	SW	WSW	W	WNW	NW	NNW	TOTAL
CALM																	1
1.01- 3.50	22	16	7	9	10	13	23	54	63	32	18	15	11	11	16	19	339
3.51- 7.50	38	35	13	14	20	38	47	48	103	43	13	15	26	37	34	23	547
7.51-12.50	72	14	5	4	29	26	56	42	91	74	53	28	40	54	66	46	700
12.51-18.50	42	7	6	1	11	1	29	59	50	37	24	19	17	33	62	55	453
18.51-24.00	1	0	0	1	0	0	1	5	23	5	6	6	3	7	35	24	117
>24.00	0	0	0	0	0	0	0	0	0	0	0	0	9	3	8	7	27
TOTAL	175	72	31	29	70	78	156	208	330	191	114	83	106	145	221	174	2184

PROGRAM: JFD VERSION: PC-1.2
NPPD-COOPER NUCLEAR STATION JFD:10M WIND VS 10M DELTA T - JAN-MAR 2012
SITE IDENTIFIER: NPPD
DATA PERIOD EXAMINED: 1/ 1/12 - 3/31/12

*** JAN-MAR 2012 ***

STABILITY BASED ON: DELTA T BETWEEN 60.0 AND 10.0 METERS
WIND MEASURED AT: 10.0 METERS
WIND THRESHOLD AT: 1.00 MPH

TOTAL NUMBER OF OBSERVATIONS: 2184

TOTAL NUMBER OF VALID OBSERVATIONS: 2184

TOTAL NUMBER OF MISSING OBSERVATIONS: 0

PERCENT DATA RECOVERY FOR THIS PERIOD: 100.0 %

MEAN WIND SPEED FOR THIS PERIOD: 9.5 MPH

TOTAL NUMBER OF OBSERVATIONS WITH BACKUP DATA: 0

PERCENTAGE OCCURRENCE OF STABILITY CLASSES

A	B	C	D	E	F	G
4.40	5.13	7.28	41.21	23.12	10.58	8.29

DISTRIBUTION OF WIND DIRECTION VS STABILITY

	N	NNE	NE	ENE	E	ESE	SE	SSE	S	SSW	SW	WSW	W	WNW	NW	NNW	CALM
A	3	1	0	0	0	1	8	10	29	17	7	4	4	1	6	5	0
B	12	2	1	1	6	5	11	3	14	11	4	7	7	16	9	3	0
C	17	9	2	0	2	12	15	6	14	9	9	7	15	12	18	12	0
D	89	29	18	18	49	37	77	73	90	40	30	28	30	66	114	112	0
E	20	20	6	6	10	12	31	55	83	57	41	17	28	41	56	22	0
F	15	5	1	2	0	5	5	25	57	38	18	15	17	4	14	10	0
G	19	6	3	2	3	6	9	36	43	19	5	5	5	5	4	10	1
TOTAL	175	72	31	29	70	78	156	208	330	191	114	83	106	145	221	174	1

JFDs of 10-Meter Wind vs. Delta T

April-June 2012

PROGRAM: JFD VERSION: PC-1.2
NPPD-COOPER NUCLEAR STATION JFD:10M WIND VS 10M DELTA T - APR-JUN 2012
SITE IDENTIFIER: NPPD
DATA PERIOD EXAMINED: 4/ 1/12 - 6/30/12

*** APR-JUN 2012 ***

STABILITY CLASS A

STABILITY BASED ON: DELTA T BETWEEN 60.0 AND 10.0 METERS
WIND MEASURED AT: 10.0 METERS
WIND THRESHOLD AT: 1.00 MPH
JOINT FREQUENCY DISTRIBUTION OF WIND SPEED AND DIRECTION IN HOURS AT 10.00 METERS

SPEED (MPH)	N	NNE	NE	ENE	E	ESE	SE	SSE	S	SSW	SW	WSW	W	WNW	NW	NNW	TOTAL
CALM																	0
1.01- 3.50	0	0	0	0	0	0	0	0	0	0	0	0	0	0	0	0	0
3.51- 7.50	1	0	2	1	3	2	2	1	0	1	0	1	0	0	0	0	14
7.51-12.50	6	1	1	1	2	1	23	30	20	7	1	0	0	1	1	2	97
12.51-18.50	5	0	1	0	0	0	17	26	64	7	3	1	1	5	3	12	145
18.51-24.00	0	0	0	0	0	0	0	7	27	0	0	0	0	0	0	0	34
>24.00	0	0	0	0	0	0	0	1	2	0	0	0	0	0	0	0	3
TOTAL	12	1	4	2	5	3	42	65	113	15	4	2	1	6	4	14	293

STABILITY CLASS B

STABILITY BASED ON: DELTA T BETWEEN 60.0 AND 10.0 METERS
WIND MEASURED AT: 10.0 METERS
WIND THRESHOLD AT: 1.00 MPH
JOINT FREQUENCY DISTRIBUTION OF WIND SPEED AND DIRECTION IN HOURS AT 10.00 METERS

SPEED (MPH)	N	NNE	NE	ENE	E	ESE	SE	SSE	S	SSW	SW	WSW	W	WNW	NW	NNW	TOTAL
CALM																	0
1.01- 3.50	0	0	0	0	0	0	0	0	0	0	0	0	0	0	0	0	0
3.51- 7.50	2	9	7	5	3	3	4	3	2	4	1	1	0	0	0	2	46
7.51-12.50	14	5	3	8	3	4	9	4	8	1	6	4	2	2	6	4	83
12.51-18.50	5	3	2	2	1	0	3	2	11	4	1	2	1	8	6	15	66
18.51-24.00	0	0	0	0	0	0	0	0	6	1	0	0	0	0	0	0	7
>24.00	0	0	0	0	0	0	0	0	3	0	0	0	0	0	0	0	3
TOTAL	21	17	12	15	7	7	16	9	30	10	8	7	3	10	12	21	205

PROGRAM: JFD VERSION: PC-1.2
NPPD-COOPER NUCLEAR STATION JFD:10M WIND VS 10M DELTA T - APR-JUN 2012
SITE IDENTIFIER: NPPD
DATA PERIOD EXAMINED: 4/ 1/12 - 6/30/12

*** APR-JUN 2012 ***

STABILITY CLASS C

STABILITY BASED ON: DELTA T BETWEEN 60.0 AND 10.0 METERS
WIND MEASURED AT: 10.0 METERS
WIND THRESHOLD AT: 1.00 MPH
JOINT FREQUENCY DISTRIBUTION OF WIND SPEED AND DIRECTION IN HOURS AT 10.00 METERS

SPEED (MPH)	N	NNE	NE	ENE	E	ESE	SE	SSE	S	SSW	SW	WSW	W	WNW	NW	NNW	TOTAL
CALM																	0
1.01- 3.50	0	0	1	0	0	0	1	0	0	0	0	0	0	1	0	0	3
3.51- 7.50	8	4	4	3	5	2	5	5	3	4	1	2	1	2	2	2	53
7.51-12.50	11	4	4	12	1	1	6	2	4	6	5	3	0	5	3	11	78
12.51-18.50	6	1	1	1	0	2	3	5	8	8	2	1	0	1	8	7	54
18.51-24.00	0	0	0	0	0	3	0	1	1	1	0	0	0	0	0	1	7
>24.00	0	0	0	0	0	0	0	0	0	0	0	0	0	0	0	0	0
TOTAL	25	9	10	16	6	8	15	13	16	19	8	6	1	9	13	21	195

STABILITY CLASS D

STABILITY BASED ON: DELTA T BETWEEN 60.0 AND 10.0 METERS
WIND MEASURED AT: 10.0 METERS
WIND THRESHOLD AT: 1.00 MPH
JOINT FREQUENCY DISTRIBUTION OF WIND SPEED AND DIRECTION IN HOURS AT 10.00 METERS

SPEED (MPH)	N	NNE	NE	ENE	E	ESE	SE	SSE	S	SSW	SW	WSW	W	WNW	NW	NNW	TOTAL
CALM																	0
1.01- 3.50	2	0	1	1	1	2	0	0	3	1	1	2	3	2	0	3	22
3.51- 7.50	6	20	16	24	5	17	25	10	8	4	7	6	3	6	8	6	171
7.51-12.50	28	23	12	23	15	15	49	34	37	14	16	2	1	6	15	23	313
12.51-18.50	21	5	2	5	1	8	24	41	46	8	5	2	6	3	12	37	226
18.51-24.00	1	0	0	0	0	2	0	1	3	0	0	3	3	3	2	2	20
>24.00	0	0	0	0	0	0	0	0	0	3	2	0	0	0	0	0	5
TOTAL	58	48	31	53	22	44	98	86	97	30	31	15	16	20	37	71	757

PROGRAM: JFD VERSION: PC-1.2
NPPD-COOPER NUCLEAR STATION JFD:10M WIND VS 10M DELTA T - APR-JUN 2012
SITE IDENTIFIER: NPPD
DATA PERIOD EXAMINED: 4/ 1/12 - 6/30/12

*** APR-JUN 2012 ***

STABILITY CLASS E

STABILITY BASED ON: DELTA T BETWEEN 60.0 AND 10.0 METERS
WIND MEASURED AT: 10.0 METERS
WIND THRESHOLD AT: 1.00 MPH
JOINT FREQUENCY DISTRIBUTION OF WIND SPEED AND DIRECTION IN HOURS AT 10.00 METERS

SPEED (MPH)	N	NNE	NE	ENE	E	ESE	SE	SSE	S	SSW	SW	WSW	W	WNW	NW	NNW	TOTAL
CALM																	0
1.01- 3.50	6	0	2	2	1	4	3	5	9	7	4	4	4	2	5	3	61
3.51- 7.50	49	7	10	11	8	4	24	22	32	16	6	3	2	2	12	32	240
7.51-12.50	15	2	2	0	2	0	11	26	40	8	7	4	1	1	9	10	138
12.51-18.50	2	0	0	0	0	0	1	3	12	3	1	0	1	1	0	6	30
18.51-24.00	1	0	0	0	0	0	0	1	1	0	0	0	0	0	0	0	3
>24.00	0	0	0	0	0	0	0	1	2	0	0	0	0	0	0	0	3
TOTAL	73	9	14	13	11	8	39	58	96	34	18	11	8	6	26	51	475

STABILITY CLASS F

STABILITY BASED ON: DELTA T BETWEEN 60.0 AND 10.0 METERS
WIND MEASURED AT: 10.0 METERS
WIND THRESHOLD AT: 1.00 MPH
JOINT FREQUENCY DISTRIBUTION OF WIND SPEED AND DIRECTION IN HOURS AT 10.00 METERS

SPEED (MPH)	N	NNE	NE	ENE	E	ESE	SE	SSE	S	SSW	SW	WSW	W	WNW	NW	NNW	TOTAL
CALM																	0
1.01- 3.50	8	5	0	1	2	0	3	8	15	19	7	4	2	5	11	14	104
3.51- 7.50	9	0	1	0	0	0	1	3	22	13	1	0	0	0	2	8	60
7.51-12.50	1	0	0	0	0	0	0	0	0	2	0	1	0	0	2	1	7
12.51-18.50	0	0	0	0	0	0	0	0	0	0	0	0	0	0	0	0	0
18.51-24.00	0	0	0	0	0	0	0	0	0	0	0	0	0	0	0	0	0
>24.00	0	0	0	0	0	0	0	0	0	0	0	0	0	0	0	0	0
TOTAL	18	5	1	1	2	0	4	11	37	34	8	5	2	5	15	23	171

PROGRAM: JFD VERSION: PC-1.2
NPPD-COOPER NUCLEAR STATION JFD:10M WIND VS 10M DELTA T - APR-JUN 2012
SITE IDENTIFIER: NPPD
DATA PERIOD EXAMINED: 4/ 1/12 - 6/30/12

*** APR-JUN 2012 ***

STABILITY CLASS G

STABILITY BASED ON: DELTA T BETWEEN 60.0 AND 10.0 METERS
WIND MEASURED AT: 10.0 METERS
WIND THRESHOLD AT: 1.00 MPH
JOINT FREQUENCY DISTRIBUTION OF WIND SPEED AND DIRECTION IN HOURS AT 10.00 METERS

SPEED (MPH)	N	NNE	NE	ENE	E	ESE	SE	SSE	S	SSW	SW	WSW	W	WNW	NW	NNW	TOTAL
CALM																	0
1.01- 3.50	8	2	1	0	0	2	1	12	17	6	4	4	3	6	5	12	83
3.51- 7.50	0	0	0	0	0	0	0	0	3	0	0	0	0	0	1	1	5
7.51-12.50	0	0	0	0	0	0	0	0	0	0	0	0	0	0	0	0	0
12.51-18.50	0	0	0	0	0	0	0	0	0	0	0	0	0	0	0	0	0
18.51-24.00	0	0	0	0	0	0	0	0	0	0	0	0	0	0	0	0	0
>24.00	0	0	0	0	0	0	0	0	0	0	0	0	0	0	0	0	0
TOTAL	8	2	1	0	0	2	1	12	20	6	4	4	3	6	6	13	88

STABILITY CLASS ALL

STABILITY BASED ON: DELTA T BETWEEN 60.0 AND 10.0 METERS
WIND MEASURED AT: 10.0 METERS
WIND THRESHOLD AT: 1.00 MPH
JOINT FREQUENCY DISTRIBUTION OF WIND SPEED AND DIRECTION IN HOURS AT 10.00 METERS

SPEED (MPH)	N	NNE	NE	ENE	E	ESE	SE	SSE	S	SSW	SW	WSW	W	WNW	NW	NNW	TOTAL
CALM																	0
1.01- 3.50	24	7	5	4	4	8	8	25	44	33	16	14	12	16	21	32	273
3.51- 7.50	75	40	40	44	24	28	61	44	70	42	16	13	6	10	25	51	589
7.51-12.50	75	35	22	44	23	21	98	96	109	38	35	14	4	15	36	51	716
12.51-18.50	39	9	6	8	2	10	48	77	141	30	12	6	9	18	29	77	521
18.51-24.00	2	0	0	0	0	5	0	10	38	2	0	3	3	3	2	3	71
>24.00	0	0	0	0	0	0	0	2	7	3	2	0	0	0	0	0	14
TOTAL	215	91	73	100	53	72	215	254	409	148	81	50	34	62	113	214	2184

PROGRAM: JFD VERSION: PC-1.2
NPPD-COOPER NUCLEAR STATION JFD:10M WIND VS 10M DELTA T - APR-JUN 2012
SITE IDENTIFIER: NPPD
DATA PERIOD EXAMINED: 4/ 1/12 - 6/30/12

*** APR-JUN 2012 ***

STABILITY BASED ON: DELTA T BETWEEN 60.0 AND 10.0 METERS
WIND MEASURED AT: 10.0 METERS
WIND THRESHOLD AT: 1.00 MPH

TOTAL NUMBER OF OBSERVATIONS: 2184

TOTAL NUMBER OF VALID OBSERVATIONS: 2184

TOTAL NUMBER OF MISSING OBSERVATIONS: 0

PERCENT DATA RECOVERY FOR THIS PERIOD: 100.0 %

MEAN WIND SPEED FOR THIS PERIOD: 9.5 MPH

TOTAL NUMBER OF OBSERVATIONS WITH BACKUP DATA: 0

PERCENTAGE OCCURRENCE OF STABILITY CLASSES

A	B	C	D	E	F	G
13.42	9.39	8.93	34.66	21.75	7.83	4.03

DISTRIBUTION OF WIND DIRECTION VS STABILITY

	N	NNE	NE	ENE	E	ESE	SE	SSE	S	SSW	SW	WSW	W	WNW	NW	NNW	CALM
A	12	1	4	2	5	3	42	65	113	15	4	2	1	6	4	14	0
B	21	17	12	15	7	7	16	9	30	10	8	7	3	10	12	21	0
C	25	9	10	16	6	8	15	13	16	19	8	6	1	9	13	21	0
D	58	48	31	53	22	44	98	86	97	30	31	15	16	20	37	71	0
E	73	9	14	13	11	8	39	58	96	34	18	11	8	6	26	51	0
F	18	5	1	1	2	0	4	11	37	34	8	5	2	5	15	23	0
G	8	2	1	0	0	2	1	12	20	6	4	4	3	6	6	13	0
TOTAL	215	91	73	100	53	72	215	254	409	148	81	50	34	62	113	214	0

JFDs of 10-Meter Wind vs. Delta T

January-June 2012

PROGRAM: JFD VERSION: PC-1.2
NPPD-COOPER NUCLEAR STATION JFD:10M WIND VS 10M DELTA T - JAN-JUN 2012
SITE IDENTIFIER: NPPD
DATA PERIOD EXAMINED: 1/ 1/12 - 6/30/12

*** JAN-JUN 2012 ***

STABILITY CLASS A

STABILITY BASED ON: DELTA T BETWEEN 60.0 AND 10.0 METERS
WIND MEASURED AT: 10.0 METERS
WIND THRESHOLD AT: 1.00 MPH
JOINT FREQUENCY DISTRIBUTION OF WIND SPEED AND DIRECTION IN HOURS AT 10.00 METERS

SPEED (MPH)	N	NNE	NE	ENE	E	ESE	SE	SSE	S	SSW	SW	WSW	W	WNW	NW	NNW	TOTAL
CALM																	0
1.01- 3.50	0	0	0	0	0	0	0	0	0	0	0	0	0	0	0	0	0
3.51- 7.50	1	0	2	1	3	2	3	1	0	1	0	2	0	0	0	0	16
7.51-12.50	8	2	1	1	2	2	29	32	26	14	2	0	2	1	1	2	125
12.51-18.50	6	0	1	0	0	0	18	34	74	14	5	3	3	6	4	13	181
18.51-24.00	0	0	0	0	0	0	0	7	40	3	4	1	0	0	5	4	64
>24.00	0	0	0	0	0	0	0	1	2	0	0	0	0	0	0	0	3
TOTAL	15	2	4	2	5	4	50	75	142	32	11	6	5	7	10	19	389

STABILITY CLASS B

STABILITY BASED ON: DELTA T BETWEEN 60.0 AND 10.0 METERS
WIND MEASURED AT: 10.0 METERS
WIND THRESHOLD AT: 1.00 MPH
JOINT FREQUENCY DISTRIBUTION OF WIND SPEED AND DIRECTION IN HOURS AT 10.00 METERS

SPEED (MPH)	N	NNE	NE	ENE	E	ESE	SE	SSE	S	SSW	SW	WSW	W	WNW	NW	NNW	TOTAL
CALM																	0
1.01- 3.50	0	0	0	0	0	0	0	0	0	0	0	0	0	0	0	0	0
3.51- 7.50	3	10	8	6	3	3	6	3	3	4	1	1	1	2	0	2	56
7.51-12.50	22	6	3	8	9	9	16	4	14	6	8	6	5	12	9	6	143
12.51-18.50	8	3	2	2	1	0	5	5	17	10	2	6	3	11	9	16	100
18.51-24.00	0	0	0	0	0	0	0	0	7	1	1	1	0	1	3	0	14
>24.00	0	0	0	0	0	0	0	0	3	0	0	0	1	0	0	0	4
TOTAL	33	19	13	16	13	12	27	12	44	21	12	14	10	26	21	24	317

PROGRAM: JFD VERSION: PC-1.2
NPPD-COOPER NUCLEAR STATION JFD:10M WIND VS 10M DELTA T - JAN-JUN 2012
SITE IDENTIFIER: NPPD
DATA PERIOD EXAMINED: 1/ 1/12 - 6/30/12

*** JAN-JUN 2012 ***

STABILITY CLASS C

STABILITY BASED ON: DELTA T BETWEEN 60.0 AND 10.0 METERS
WIND MEASURED AT: 10.0 METERS
WIND THRESHOLD AT: 1.00 MPH
JOINT FREQUENCY DISTRIBUTION OF WIND SPEED AND DIRECTION IN HOURS AT 10.00 METERS

SPEED (MPH)	N	NNE	NE	ENE	E	ESE	SE	SSE	S	SSW	SW	WSW	W	WNW	NW	NNW	TOTAL
CALM																	0
1.01- 3.50	0	0	1	0	0	0	3	1	0	0	0	0	0	1	0	0	6
3.51- 7.50	15	10	6	3	6	7	11	6	6	7	3	3	4	5	3	3	98
7.51-12.50	19	6	4	12	2	8	12	4	9	9	7	8	4	10	9	14	137
12.51-18.50	8	2	1	1	0	2	4	7	12	9	6	2	4	3	14	12	87
18.51-24.00	0	0	0	0	0	3	0	1	3	3	1	0	1	2	5	2	21
>24.00	0	0	0	0	0	0	0	0	0	0	0	0	3	0	0	2	5
TOTAL	42	18	12	16	8	20	30	19	30	28	17	13	16	21	31	33	354

STABILITY CLASS D

STABILITY BASED ON: DELTA T BETWEEN 60.0 AND 10.0 METERS
WIND MEASURED AT: 10.0 METERS
WIND THRESHOLD AT: 1.00 MPH
JOINT FREQUENCY DISTRIBUTION OF WIND SPEED AND DIRECTION IN HOURS AT 10.00 METERS

SPEED (MPH)	N	NNE	NE	ENE	E	ESE	SE	SSE	S	SSW	SW	WSW	W	WNW	NW	NNW	TOTAL
CALM																	0
1.01- 3.50	3	2	4	4	5	3	3	1	4	2	1	3	5	2	0	4	46
3.51- 7.50	20	38	21	33	19	40	51	22	27	14	12	14	9	18	18	15	371
7.51-12.50	77	27	17	27	36	27	75	52	72	30	33	8	11	28	43	55	618
12.51-18.50	45	10	7	6	11	9	45	78	75	21	13	11	11	28	58	83	511
18.51-24.00	2	0	0	1	0	2	1	6	9	0	0	7	5	7	24	21	85
>24.00	0	0	0	0	0	0	0	0	0	3	2	0	5	3	8	5	26
TOTAL	147	77	49	71	71	81	175	159	187	70	61	43	46	86	151	183	1657

PROGRAM: JFD VERSION: PC-1.2
NPPD-COOPER NUCLEAR STATION JFD:10M WIND VS 10M DELTA T - JAN-JUN 2012
SITE IDENTIFIER: NPPD
DATA PERIOD EXAMINED: 1/ 1/12 - 6/30/12

*** JAN-JUN 2012 ***

STABILITY CLASS E

STABILITY BASED ON: DELTA T BETWEEN 60.0 AND 10.0 METERS
WIND MEASURED AT: 10.0 METERS
WIND THRESHOLD AT: 1.00 MPH
JOINT FREQUENCY DISTRIBUTION OF WIND SPEED AND DIRECTION IN HOURS AT 10.00 METERS

SPEED (MPH)	N	NNE	NE	ENE	E	ESE	SE	SSE	S	SSW	SW	WSW	W	WNW	NW	NNW	TOTAL
CALM																	0
1.01- 3.50	9	4	2	4	4	6	7	12	20	14	9	8	9	9	12	9	138
3.51- 7.50	64	16	15	15	13	14	36	41	65	28	12	6	9	19	27	41	421
7.51-12.50	17	8	2	0	3	0	22	46	77	36	30	13	14	16	37	17	338
12.51-18.50	2	1	1	0	1	0	5	12	13	13	8	1	4	3	6	6	76
18.51-24.00	1	0	0	0	0	0	0	1	2	0	0	0	0	0	0	0	4
>24.00	0	0	0	0	0	0	0	1	2	0	0	0	0	0	0	0	3
TOTAL	93	29	20	19	21	20	70	113	179	91	59	28	36	47	82	73	980

STABILITY CLASS F

STABILITY BASED ON: DELTA T BETWEEN 60.0 AND 10.0 METERS
WIND MEASURED AT: 10.0 METERS
WIND THRESHOLD AT: 1.00 MPH
JOINT FREQUENCY DISTRIBUTION OF WIND SPEED AND DIRECTION IN HOURS AT 10.00 METERS

SPEED (MPH)	N	NNE	NE	ENE	E	ESE	SE	SSE	S	SSW	SW	WSW	W	WNW	NW	NNW	TOTAL
CALM																	0
1.01- 3.50	12	10	1	3	2	4	8	25	37	28	16	10	5	6	17	17	201
3.51- 7.50	10	0	1	0	0	0	1	11	56	27	1	2	6	2	9	12	138
7.51-12.50	4	0	0	0	0	1	0	0	1	17	7	6	7	1	3	3	50
12.51-18.50	7	0	0	0	0	0	0	0	0	0	2	2	1	0	0	1	13
18.51-24.00	0	0	0	0	0	0	0	0	0	0	0	0	0	0	0	0	0
>24.00	0	0	0	0	0	0	0	0	0	0	0	0	0	0	0	0	0
TOTAL	33	10	2	3	2	5	9	36	94	72	26	20	19	9	29	33	402

PROGRAM: JFD VERSION: PC-1.2
NPPD-COOPER NUCLEAR STATION JFD:10M WIND VS 10M DELTA T - JAN-JUN 2012
SITE IDENTIFIER: NPPD
DATA PERIOD EXAMINED: 1/ 1/12 - 6/30/12

*** JAN-JUN 2012 ***

STABILITY CLASS G

STABILITY BASED ON: DELTA T BETWEEN 60.0 AND 10.0 METERS
WIND MEASURED AT: 10.0 METERS
WIND THRESHOLD AT: 1.00 MPH
JOINT FREQUENCY DISTRIBUTION OF WIND SPEED AND DIRECTION IN HOURS AT 10.00 METERS

SPEED (MPH)	N	NNE	NE	ENE	E	ESE	SE	SSE	S	SSW	SW	WSW	W	WNW	NW	NNW	TOTAL
CALM																	1
1.01- 3.50	22	7	4	2	3	8	10	40	46	21	8	8	4	9	8	21	221
3.51- 7.50	0	1	0	0	0	0	0	8	16	4	0	0	3	1	2	1	36
7.51-12.50	0	0	0	0	0	0	0	0	1	0	1	1	1	1	0	0	5
12.51-18.50	5	0	0	0	0	0	0	0	0	0	0	0	0	0	0	1	6
18.51-24.00	0	0	0	0	0	0	0	0	0	0	0	0	0	0	0	0	0
>24.00	0	0	0	0	0	0	0	0	0	0	0	0	0	0	0	0	0
TOTAL	27	8	4	2	3	8	10	48	63	25	9	9	8	11	10	23	269

STABILITY CLASS ALL

STABILITY BASED ON: DELTA T BETWEEN 60.0 AND 10.0 METERS
WIND MEASURED AT: 10.0 METERS
WIND THRESHOLD AT: 1.00 MPH
JOINT FREQUENCY DISTRIBUTION OF WIND SPEED AND DIRECTION IN HOURS AT 10.00 METERS

SPEED (MPH)	N	NNE	NE	ENE	E	ESE	SE	SSE	S	SSW	SW	WSW	W	WNW	NW	NNW	TOTAL
CALM																	1
1.01- 3.50	46	23	12	13	14	21	31	79	107	65	34	29	23	27	37	51	612
3.51- 7.50	113	75	53	58	44	66	108	92	173	85	29	28	32	47	59	74	1136
7.51-12.50	147	49	27	48	52	47	154	138	200	112	88	42	44	69	102	97	1416
12.51-18.50	81	16	12	9	13	11	77	136	191	67	36	25	26	51	91	132	974
18.51-24.00	3	0	0	1	0	5	1	15	61	7	6	9	6	10	37	27	188
>24.00	0	0	0	0	0	0	0	2	7	3	2	0	9	3	8	7	41
TOTAL	390	163	104	129	123	150	371	462	739	339	195	133	140	207	334	388	4368

PROGRAM: JFD VERSION: PC-1.2
NPPD-COOPER NUCLEAR STATION JFD:10M WIND VS 10M DELTA T - JAN-JUN 2012
SITE IDENTIFIER: NPPD
DATA PERIOD EXAMINED: 1/ 1/12 - 6/30/12

*** JAN-JUN 2012 ***

STABILITY BASED ON: DELTA T BETWEEN 60.0 AND 10.0 METERS
WIND MEASURED AT: 10.0 METERS
WIND THRESHOLD AT: 1.00 MPH

TOTAL NUMBER OF OBSERVATIONS: 4368

TOTAL NUMBER OF VALID OBSERVATIONS: 4368

TOTAL NUMBER OF MISSING OBSERVATIONS: 0

PERCENT DATA RECOVERY FOR THIS PERIOD: 100.0 %

MEAN WIND SPEED FOR THIS PERIOD: 9.5 MPH

TOTAL NUMBER OF OBSERVATIONS WITH BACKUP DATA: 0

PERCENTAGE OCCURRENCE OF STABILITY CLASSES

A	B	C	D	E	F	G
8.91	7.26	8.10	37.93	22.44	9.20	6.16

DISTRIBUTION OF WIND DIRECTION VS STABILITY

	N	NNE	NE	ENE	E	ESE	SE	SSE	S	SSW	SW	WSW	W	WNW	NW	NNW	CALM
A	15	2	4	2	5	4	50	75	142	32	11	6	5	7	10	19	0
B	33	19	13	16	13	12	27	12	44	21	12	14	10	26	21	24	0
C	42	18	12	16	8	20	30	19	30	28	17	13	16	21	31	33	0
D	147	77	49	71	71	81	175	159	187	70	61	43	46	86	151	183	0
E	93	29	20	19	21	20	70	113	179	91	59	28	36	47	82	73	0
F	33	10	2	3	2	5	9	36	94	72	26	20	19	9	29	33	0
G	27	8	4	2	3	8	10	48	63	25	9	9	8	11	10	23	1
TOTAL	390	163	104	129	123	150	371	462	739	339	195	133	140	207	334	388	1

Stability Classes by Hour of Day

10-Meter Wind vs. Delta T

January-June 2012

PROGRAM: JFD VERSION: PC-1.2
NPPD-COOPER NUCLEAR STATION JFD:10M WIND VS 10M DELTA T - JAN-JUN 2012
SITE IDENTIFIER: NPPD
DATA PERIOD EXAMINED: 1/ 1/12 - 6/30/12
STABILITY BASED ON: DELTA T BETWEEN 60.0 AND 10.0 METERS

HOURLY STABILITIES

YR	MN	DY	HOURS 1	2	3	4	5	6	7	8	9	10	11	12	13	14	15	16	17	18	19	20	21	22	23	24
12	1	1	D	D	D	D	D	D	D	E	D	D	D	D	D	D	D	D	D	E	E	E	E	E	E	E
12	1	2	E	E	E	E	D	E	E	E	D	D	D	C	C	C	D	D	D	E	E	E	E	F	G	G
12	1	3	G	F	F	F	E	E	E	D	D	D	C	C	B	B	D	D	E	E	E	E	E	E	E	E
12	1	4	E	F	E	E	E	E	E	E	E	D	D	D	C	C	D	D	D	F	G	F	F	F	E	F
12	1	5	E	F	F	E	F	F	G	G	E	E	D	D	D	D	D	D	E	E	F	F	F	E	E	E
12	1	6	E	E	E	F	F	F	E	F	F	D	D	D	C	C	D	D	D	E	E	E	E	F	F	E
12	1	7	E	F	F	F	F	F	G	G	F	E	D	D	D	D	D	D	D	E	F	G	G	G	G	G
12	1	8	G	G	G	G	G	F	F	F	E	E	D	D	C	C	D	D	D	E	G	F	G	G	G	G
12	1	9	F	G	F	F	E	E	G	F	F	E	D	C	C	D	D	D	D	E	F	F	E	E	F	F
12	1	10	G	G	G	G	F	F	F	G	G	E	E	D	D	B	C	D	D	E	F	G	G	G	G	G
12	1	11	G	G	G	G	G	G	G	F	E	D	D	D	D	D	D	D	D	D	D	D	D	D	D	D
12	1	12	D	D	D	D	D	D	D	D	D	D	D	D	D	D	D	D	D	D	D	D	D	D	D	D
12	1	13	D	D	D	D	E	D	D	D	D	D	C	C	C	C	C	D	D	E	F	F	E	E	E	E
12	1	14	E	D	E	F	D	D	E	E	D	D	D	D	C	D	D	D	D	E	G	G	G	G	F	G
12	1	15	F	G	G	E	E	E	E	E	D	D	D	C	B	B	C	D	D	E	F	F	F	F	F	E
12	1	16	E	E	F	G	G	G	G	G	E	D	C	C	C	D	D	D	D	D	D	D	D	D	D	D
12	1	17	D	D	D	D	D	D	D	D	D	D	D	D	D	D	D	D	D	E	F	G	G	G	F	F
12	1	18	F	F	F	F	G	E	E	D	D	D	D	D	D	D	D	D	D	E	E	E	D	D	D	D
12	1	19	D	D	D	D	D	D	D	D	D	D	C	B	B	B	B	C	D	D	D	D	D	D	D	D
12	1	20	D	D	D	D	D	D	D	D	D	D	D	D	D	D	C	C	D	D	D	D	D	D	D	D
12	1	21	D	D	D	D	D	D	D	D	D	D	D	D	C	C	C	C	D	D	D	D	D	D	D	D
12	1	22	D	D	D	D	D	D	D	D	D	D	D	D	D	D	D	D	D	D	D	D	D	D	D	D
12	1	23	D	D	D	D	D	D	D	D	D	D	D	D	D	D	D	D	D	D	E	E	F	G	G	G
12	1	24	G	G	G	G	G	G	F	E	E	D	D	C	C	D	D	D	D	D	E	E	E	D	D	D
12	1	25	D	E	D	D	E	E	E	E	E	E	D	D	C	C	C	D	D	D	F	F	G	G	G	G
12	1	26	G	G	G	G	G	F	E	E	F	E	D	D	C	C	C	D	D	E	E	E	E	F	E	F
12	1	27	G	G	G	G	G	F	E	E	D	D	D	D	D	D	D	D	D	D	D	D	E	E	E	E
12	1	28	E	E	E	E	E	F	F	F	E	D	D	B	B	B	C	C	D	E	E	F	F	E	E	E
12	1	29	E	E	F	F	F	F	E	F	E	D	D	D	C	C	C	C	D	D	E	F	F	E	E	F
12	1	30	E	E	E	E	E	E	E	E	D	D	C	B	A	A	A	C	D	F	G	F	F	F	F	E
12	1	31	F	F	F	G	G	G	F	F	E	D	D	B	C	B	C	C	D	D	E	G	G	G	G	G
12	2	1	G	G	G	G	G	G	G	G	G	G	E	D	B	B	D	D	D	E	E	F	F	F	G	G
12	2	2	G	G	G	G	G	G	G	G	F	E	D	D	D	C	D	D	D	D	E	E	E	E	E	E
12	2	3	E	D	D	D	D	E	E	D	D	D	D	D	D	D	D	D	D	D	D	D	D	D	D	D
12	2	4	D	E	E	E	E	F	F	F	F	F	F	F	F	F	F	G	G	G	G	G	G	F	F	F
12	2	5	E	E	E	E	E	E	E	E	E	D	D	D	D	D	C	D	D	D	D	D	E	E	E	E
12	2	6	E	E	D	D	E	E	E	E	E	D	D	D	D	A	A	C	D	E	G	G	G	G	G	G
12	2	7	E	F	F	E	D	D	D	D	D	D	D	D	D	D	D	D	D	D	D	D	D	D	D	D
12	2	8	D	D	D	D	D	D	D	D	D	D	D	D	C	C	C	C	D	D	D	D	D	D	D	D
12	2	9	D	D	D	D	D	D	D	D	D	D	D	D	C	C	D	D	D	D	E	E	E	E	E	E
12	2	10	D	E	D	D	D	D	D	D	D	C	A	A	A	A	A	A	C	D	D	D	D	D	D	D
12	2	11	D	D	D	D	D	D	D	D	D	D	B	B	B	B	B	B	B	D	D	E	E	E	E	E
12	2	12	E	E	E	E	E	F	F	F	E	D	B	A	A	A	A	A	B	C	D	D	D	D	D	D
12	2	13	D	D	D	D	D	D	D	D	D	D	D	D	D	D	D	D	D	D	E	E	E	E	E	E
12	2	14	E	E	E	E	E	E	E	E	E	D	C	A	B	B	B	D	D	E	E	E	E	E	E	F

PROGRAM: JFD VERSION: PC-1.2
NPPD-COOPER NUCLEAR STATION JFD:10M WIND VS 10M DELTA T - JAN-JUN 2012
SITE IDENTIFIER: NPPD
DATA PERIOD EXAMINED: 1/ 1/12 - 6/30/12
STABILITY BASED ON: DELTA T BETWEEN 60.0 AND 10.0 METERS

HOURLY STABILITIES

YR	MN	DY	1	2	3	4	5	6	7	8	9	10	11	12	13	14	15	16	17	18	19	20	21	22	23	24
			HOURS																							
12	2	15	E	F	F	F	F	F	F	F	F	E	D	D	D	C	D	C	D	D	E	D	D	D	E	E
12	2	16	E	E	E	E	E	E	D	E	D	D	C	B	B	B	B	C	C	D	E	F	G	G	F	F
12	2	17	E	E	E	E	E	E	E	E	D	D	D	C	B	B	C	B	C	D	D	E	E	D	D	D
12	2	18	D	D	D	D	D	E	E	F	E	D	C	C	B	B	B	B	C	D	D	D	E	E	E	F
12	2	19	F	F	F	F	F	F	F	E	E	C	D	A	A	A	B	B	C	D	E	E	E	E	D	E
12	2	20	D	D	D	D	E	D	D	D	D	D	D	D	D	D	D	E	E	E	E	E	E	E	E	E
12	2	21	D	D	D	D	D	D	D	E	D	D	D	C	C	B	C	C	D	D	E	F	F	F	E	E
12	2	22	E	E	E	D	E	E	E	E	E	D	C	C	C	B	C	D	D	D	E	F	E	E	E	E
12	2	23	E	D	D	D	D	D	E	D	D	D	C	C	C	C	D	D	D	D	D	D	D	D	D	D
12	2	24	D	D	D	D	D	D	D	D	D	D	C	B	A	A	B	B	D	D	D	E	E	E	E	D
12	2	25	D	D	D	D	D	E	E	E	D	C	C	B	A	A	A	A	B	D	D	D	E	D	D	E
12	2	26	D	E	E	E	E	E	E	E	D	D	C	B	A	A	B	B	C	D	E	E	F	F	F	D
12	2	27	D	D	D	D	D	D	E	E	D	B	A	B	A	B	A	B	C	C	D	D	D	D	D	D
12	2	28	D	D	D	D	D	D	D	D	D	D	D	D	D	D	D	D	D	E	E	E	E	E	E	E
12	2	29	D	D	D	D	D	D	D	D	D	D	D	D	C	D	C	C	D	D	D	E	E	E	E	E
12	3	1	F	G	G	F	F	F	F	E	D	C	B	B	B	B	B	C	D	D	E	D	D	D	D	D
12	3	2	D	D	D	D	D	D	D	D	D	D	C	D	B	B	B	C	D	D	D	E	E	D	D	D
12	3	3	D	E	D	D	D	D	D	D	D	C	B	A	A	B	A	B	C	D	E	E	F	F	F	F
12	3	4	F	F	F	F	F	F	F	E	D	D	C	B	B	A	B	C	C	D	D	D	D	D	D	D
12	3	5	E	F	F	G	G	F	G	F	E	C	A	A	A	A	A	A	B	D	E	E	E	F	E	E
12	3	6	E	E	E	E	E	E	E	E	D	B	A	A	A	A	A	A	C	D	D	E	D	D	D	D
12	3	7	D	D	E	D	D	D	E	D	D	C	D	D	D	C	D	D	D	D	D	D	D	D	D	D
12	3	8	D	D	D	D	E	E	E	E	D	C	B	B	A	A	B	C	C	D	E	F	G	G	G	G
12	3	9	F	F	F	E	E	F	F	E	D	C	B	B	A	B	A	A	B	D	E	F	F	F	F	F
12	3	10	F	F	F	F	F	F	F	F	D	C	A	A	A	A	A	A	B	D	E	E	E	F	F	F
12	3	11	F	F	E	E	E	D	D	D	D	D	D	D	D	D	D	E	E	E	E	E	E	E	E	E
12	3	12	E	E	E	F	E	E	E	E	E	D	D	D	C	C	C	C	D	D	F	G	G	G	G	G
12	3	13	G	G	G	G	F	G	F	G	F	D	B	A	A	A	A	B	D	D	E	E	E	E	E	E
12	3	14	E	E	E	E	E	E	E	E	D	D	B	A	A	A	A	B	C	D	E	F	G	G	G	F
12	3	15	G	G	G	G	F	F	G	F	E	D	C	A	B	B	A	C	C	D	E	E	F	E	E	F
12	3	16	F	F	F	E	F	E	E	E	D	C	B	A	A	A	A	A	A	D	E	E	E	E	E	E
12	3	17	E	D	E	D	D	D	D	D	D	B	A	A	A	A	A	A	B	D	D	D	D	D	D	D
12	3	18	E	E	D	D	D	D	D	D	D	B	A	A	A	A	A	A	C	D	D	D	D	D	D	D
12	3	19	D	D	D	D	D	D	D	D	D	D	B	D	D	D	D	D	D	D	D	D	D	D	D	D
12	3	20	D	D	D	D	D	D	D	D	D	D	D	D	D	D	D	E	E	E	E	E	E	E	E	E
12	3	21	E	E	E	E	E	E	E	E	E	D	D	D	D	D	E	E	E	D	D	D	D	D	D	D
12	3	22	D	D	D	D	E	E	E	E	D	C	B	B	B	A	B	B	C	D	D	D	E	E	D	D
12	3	23	E	E	E	E	E	E	E	E	D	D	D	C	C	C	C	C	C	D	E	G	G	G	G	F
12	3	24	F	F	F	F	G	F	F	E	D	D	D	C	C	C	D	D	D	D	E	G	G	G	G	G
12	3	25	G	G	G	G	G	G	G	G	F	D	C	C	C	C	C	B	C	D	E	F	F	F	F	F
12	3	26	F	F	F	E	E	D	E	E	D	D	C	B	A	A	A	B	C	D	D	E	D	D	D	D
12	3	27	D	E	E	E	E	E	E	E	D	C	B	A	B	B	B	B	C	D	E	F	F	G	G	F
12	3	28	G	G	G	G	G	G	G	G	E	D	B	A	B	B	B	C	D	D	D	D	D	D	D	D
12	3	29	D	D	D	D	D	D	D	D	D	D	D	D	C	B	C	C	D	D	E	E	E	E	D	E
12	3	30	E	D	D	E	E	E	E	E	D	D	D	B	C	C	C	C	C	D	D	E	E	E	E	E

PROGRAM: JFD VERSION: PC-1.2
NPPD-COOPER NUCLEAR STATION JFD:10M WIND VS 10M DELTA T - JAN-JUN 2012
SITE IDENTIFIER: NPPD
DATA PERIOD EXAMINED: 1/ 1/12 - 6/30/12
STABILITY BASED ON: DELTA T BETWEEN 60.0 AND 10.0 METERS

HOURLY STABILITIES

YR	MN	DY	1	2	3	4	5	6	7	8	9	10	11	12	13	14	15	16	17	18	19	20	21	22	23	24
			HOURS																							
12	3	31	E	F	E	E	E	E	E	D	D	D	B	A	A	A	A	B	C	D	E	F	E	E	E	E
12	4	1	E	F	F	F	F	F	F	E	D	B	A	A	A	A	A	A	A	D	E	E	E	E	E	E
12	4	2	E	E	E	E	D	E	E	D	C	A	A	A	A	A	A	A	A	C	D	E	F	E	D	D
12	4	3	D	D	D	D	D	D	D	D	D	B	B	B	B	A	B	B	D	D	D	D	D	D	D	D
12	4	4	D	D	D	D	D	D	D	D	D	D	C	C	C	B	A	C	D	D	D	D	D	D	E	E
12	4	5	D	D	D	D	D	D	D	D	D	D	C	B	B	B	B	B	C	D	D	D	E	E	E	F
12	4	6	F	F	E	D	D	D	D	D	C	B	A	A	A	A	A	B	B	C	D	D	D	D	D	D
12	4	7	D	D	D	E	D	D	D	D	D	D	D	D	C	C	D	D	D	D	E	E	F	F	F	G
12	4	8	G	G	G	G	G	G	G	G	E	D	B	A	A	B	B	C	D	D	D	E	E	E	E	F
12	4	9	G	G	G	G	G	G	G	F	D	D	C	B	B	B	C	D	D	D	D	E	E	E	E	D
12	4	10	D	E	E	E	E	E	E	E	D	C	D	C	C	B	B	B	C	D	D	E	E	E	E	E
12	4	11	D	D	D	D	D	D	D	D	C	C	B	B	B	B	B	B	D	D	D	D	E	E	E	E
12	4	12	E	E	D	D	D	D	D	D	D	D	D	D	D	D	D	D	D	D	D	D	D	D	D	D
12	4	13	D	D	D	E	D	D	D	D	D	D	D	B	D	D	D	D	D	D	E	F	F	G	F	F
12	4	14	G	G	G	G	G	F	G	F	E	D	D	D	D	D	D	D	E	E	E	E	E	E	E	E
12	4	15	E	E	E	D	E	E	E	D	D	D	B	B	B	B	D	D	D	D	D	D	D	D	D	D
12	4	16	D	D	D	D	D	D	D	D	D	C	B	C	B	C	D	D	D	D	D	E	E	E	E	E
12	4	17	E	E	E	E	E	E	E	E	D	D	C	A	A	A	A	C	B	D	D	E	E	E	E	E
12	4	18	E	E	E	E	E	E	E	E	C	C	B	B	B	A	A	C	D	D	E	F	G	G	G	G
12	4	19	E	E	E	E	D	D	D	D	D	D	A	D	D	D	D	D	D	D	D	D	D	D	D	D
12	4	20	D	D	D	D	D	D	D	D	C	B	B	A	A	A	A	B	C	D	D	E	E	F	F	G
12	4	21	G	G	G	G	F	F	E	D	D	B	A	A	B	A	B	B	C	D	D	E	E	E	E	E
12	4	22	E	D	D	D	D	D	D	D	D	C	B	B	A	A	A	B	C	D	D	D	E	E	E	E
12	4	23	F	F	F	G	F	G	F	D	C	C	B	B	B	B	B	C	C	D	D	F	F	F	E	F
12	4	24	F	F	F	F	F	F	F	D	D	B	C	B	B	C	B	C	D	D	E	E	E	F	G	F
12	4	25	F	F	G	F	E	F	F	E	C	B	D	D	A	B	B	B	D	D	E	E	F	F	F	F
12	4	26	F	G	G	G	G	G	E	D	C	C	B	A	B	C	C	C	D	D	D	D	D	D	D	D
12	4	27	D	D	D	D	D	D	D	D	C	C	C	D	C	D	C	D	D	D	D	D	D	D	D	D
12	4	28	D	E	D	E	D	D	D	D	D	D	C	C	A	B	B	C	C	D	D	D	D	D	D	D
12	4	29	D	D	D	D	D	D	D	D	D	E	E	D	D	D	D	D	D	D	D	E	E	E	E	D
12	4	30	E	E	E	E	E	E	E	D	D	D	D	B	C	B	B	B	B	B	C	D	D	D	D	D
12	5	1	D	D	D	D	E	E	E	D	C	B	B	A	A	A	A	A	C	D	D	D	D	D	D	D
12	5	2	E	E	E	E	F	E	E	D	D	D	D	D	C	B	A	B	D	D	D	D	E	D	D	D
12	5	3	D	D	E	E	E	E	D	D	C	A	A	A	A	B	C	D	D	D	D	E	E	E	E	E
12	5	4	E	F	E	F	E	D	D	D	D	C	A	A	A	A	A	A	A	B	D	D	E	D	E	E
12	5	5	E	E	E	E	E	D	D	D	D	B	A	A	A	A	A	A	B	C	D	D	D	D	E	E
12	5	6	E	D	D	D	D	D	D	D	D	C	B	B	B	A	C	D	D	D	D	D	D	D	E	D
12	5	7	E	D	D	D	D	D	E	D	D	C	B	B	B	B	B	C	D	D	D	E	E	E	E	F
12	5	8	F	G	E	E	E	E	D	D	D	C	B	B	B	A	B	B	C	D	D	E	E	E	E	E
12	5	9	E	E	E	E	E	E	E	D	C	B	B	B	B	A	B	C	C	C	D	F	G	G	F	F
12	5	10	E	F	F	F	F	F	E	D	B	A	A	A	A	A	A	A	A	A	D	D	D	D	E	E
12	5	11	E	E	E	F	F	F	F	D	C	B	B	B	B	B	C	C	C	C	D	E	D	D	D	D
12	5	12	D	D	D	D	D	D	D	D	C	C	C	C	D	D	D	D	D	D	E	E	F	F	F	E
12	5	13	E	E	E	E	E	F	E	D	D	C	B	B	C	B	B	C	C	D	D	F	F	G	G	G
12	5	14	G	G	G	G	G	G	G	E	C	C	A	B	B	A	B	B	C	D	D	E	F	F	E	E

PROGRAM: JFD VERSION: PC-1.2
NPPD-COOPER NUCLEAR STATION JFD:10M WIND VS 10M DELTA T - JAN-JUN 2012
SITE IDENTIFIER: NPPD
DATA PERIOD EXAMINED: 1/ 1/12 - 6/30/12
STABILITY BASED ON: DELTA T BETWEEN 60.0 AND 10.0 METERS

HOURLY STABILITIES
HOURS

YR	MN	DY	1	2	3	4	5	6	7	8	9	10	11	12	13	14	15	16	17	18	19	20	21	22	23	24
12	5	15	E	E	E	E	E	E	D	D	C	B	A	A	A	B	B	C	D	D	E	E	E	E	E	E
12	5	16	E	E	E	E	E	E	E	D	C	B	A	B	A	C	C	B	B	B	D	D	E	E	E	E
12	5	17	F	F	E	E	E	E	D	C	A	A	A	A	A	A	A	A	A	C	D	D	D	D	D	D
12	5	18	D	D	E	E	E	E	D	D	B	A	A	A	A	A	A	A	A	C	D	D	D	E	E	E
12	5	19	D	D	D	D	D	D	D	D	C	A	A	A	A	A	A	A	A	D	D	D	D	D	D	D
12	5	20	D	D	D	D	D	D	D	D	C	C	B	A	A	A	A	B	D	D	D	E	E	E	E	E
12	5	21	E	E	E	E	F	G	F	D	C	A	A	A	B	B	B	B	C	C	C	E	F	F	F	F
12	5	22	F	E	E	E	E	E	D	D	D	A	A	A	A	A	A	A	A	B	D	D	D	D	D	D
12	5	23	D	D	D	D	D	D	D	C	B	A	A	A	A	A	A	A	B	B	D	D	D	D	D	D
12	5	24	D	D	D	D	D	D	D	D	D	C	C	A	B	A	A	A	C	C	D	E	E	D	E	E
12	5	25	F	F	E	F	F	E	D	D	B	B	B	B	C	D	D	D	D	D	D	D	D	D	D	D
12	5	26	D	D	D	D	D	D	D	D	C	A	A	A	A	A	A	A	B	B	D	D	D	D	D	D
12	5	27	E	E	E	E	D	D	D	C	A	A	A	A	A	A	A	A	A	B	C	D	D	D	D	D
12	5	28	D	D	D	E	D	E	D	C	B	A	B	A	A	A	B	B	C	C	D	E	F	F	G	F
12	5	29	G	F	G	F	F	F	E	D	C	B	A	A	A	A	A	A	B	C	D	E	E	F	F	F
12	5	30	F	E	E	E	E	E	D	D	C	B	B	A	A	C	A	E	E	E	E	D	D	E	E	E
12	5	31	D	E	D	D	D	D	D	D	D	C	D	C	C	B	C	D	D	D	D	D	E	E	E	F
12	6	1	F	F	E	E	E	F	E	D	D	C	D	C	C	C	B	B	C	D	D	D	D	D	E	E
12	6	2	E	E	E	F	E	F	E	D	C	D	B	B	B	B	A	B	B	D	D	E	G	G	G	G
12	6	3	F	F	F	G	F	F	E	E	C	A	A	B	A	A	A	C	C	D	D	E	F	F	F	E
12	6	4	E	E	E	E	E	E	D	D	C	B	B	A	B	A	A	B	C	D	D	E	F	F	F	E
12	6	5	E	E	F	F	G	G	F	C	B	A	A	A	A	A	A	A	B	C	D	D	F	F	F	E
12	6	6	F	F	E	E	F	F	E	C	B	A	A	A	A	A	A	A	A	A	B	D	D	D	D	D
12	6	7	D	D	E	F	E	E	D	C	A	A	A	A	A	A	A	A	A	A	B	D	E	F	F	F
12	6	8	E	E	E	E	E	E	D	C	B	A	A	A	A	A	A	A	A	A	B	D	E	F	F	F
12	6	9	F	E	E	F	E	E	D	B	A	A	A	A	A	A	A	A	A	B	D	D	D	E	E	E
12	6	10	D	D	D	D	D	D	D	C	A	A	A	A	A	A	C	C	B	C	D	D	D	E	D	D
12	6	11	E	E	E	E	E	E	E	D	C	B	B	B	A	A	A	B	B	C	D	E	F	F	G	F
12	6	12	E	G	G	G	G	G	F	D	C	C	B	B	A	A	B	B	B	B	C	D	E	E	F	F
12	6	13	F	F	E	E	E	D	D	C	A	A	A	A	A	A	A	A	A	A	C	D	D	D	D	D
12	6	14	D	D	D	D	D	D	D	B	A	A	A	A	A	A	A	A	A	D	D	D	D	D	E	E
12	6	15	E	E	E	D	D	E	E	E	D	D	D	C	D	D	C	D	C	D	D	D	E	E	F	F
12	6	16	E	E	F	F	F	F	E	D	D	D	D	D	D	D	D	D	C	D	D	D	E	G	G	G
12	6	17	F	F	G	G	F	F	E	D	B	A	A	A	A	A	A	A	D	D	D	E	E	E	E	E
12	6	18	E	E	E	E	E	D	D	D	D	C	B	C	C	B	C	C	C	D	D	E	E	E	E	E
12	6	19	E	E	E	E	E	D	D	C	A	A	A	A	A	A	A	A	A	B	D	D	E	E	E	E
12	6	20	E	E	D	D	D	D	D	C	B	A	C	D	A	A	D	D	D	D	E	E	E	D	E	E
12	6	21	E	E	E	E	E	E	D	D	D	C	C	C	C	B	C	C	D	D	D	E	G	G	G	G
12	6	22	G	G	G	G	G	G	F	D	D	B	B	B	A	A	A	A	A	A	C	E	E	E	E	E
12	6	23	E	E	E	E	F	E	D	D	D	E	E	D	B	A	A	A	A	B	D	D	D	D	D	D
12	6	24	E	E	E	E	E	E	E	D	D	C	C	C	D	C	C	C	C	D	D	E	E	E	E	E
12	6	25	D	D	D	D	D	D	D	D	C	B	B	B	B	B	C	B	C	C	D	D	D	D	D	D
12	6	26	D	D	D	D	D	D	D	C	A	A	A	A	A	A	A	A	A	A	C	D	D	E	E	E
12	6	27	E	E	E	E	F	E	E	D	D	D	C	C	C	A	A	A	A	D	D	E	E	E	E	E
12	6	28	E	E	E	E	E	F	E	D	C	D	D	C	D	C	D	D	D	D	E	E	E	F	E	F

PROGRAM: JFD VERSION: PC-1.2
NPPD-COOPER NUCLEAR STATION JFD:10M WIND VS 10M DELTA T - JAN-JUN 2012
SITE IDENTIFIER: NPPD
DATA PERIOD EXAMINED: 1/ 1/12 - 6/30/12
STABILITY BASED ON: DELTA T BETWEEN 60.0 AND 10.0 METERS

HOURLY STABILITIES

YR	MN	DY	1	2	3	4	5	6	7	8	9	10	11	12	13	14	15	16	17	18	19	20	21	22	23	24
			HOURS																							
12	6	29	F	F	E	E	F	G	F	E	D	D	D	D	E	D	D	D	D	D	D	E	E	E	E	E
12	6	30	E	F	G	F	F	F	E	D	D	B	D	C	C	A	B	C	D	D	E	E	E	D	E	E

JFDs of 10-Meter Wind vs. Delta T

July-September 2012

PROGRAM: JFD VERSION: PC-1.2
NPPD-COOPER NUCLEAR STATION JFD:10M WIND VS 10M DELTA T - JUL-SEP 2012
SITE IDENTIFIER: NPPD
DATA PERIOD EXAMINED: 7/ 1/12 - 9/30/12

*** JUL-SEP 2012 ***

STABILITY CLASS A

STABILITY BASED ON: DELTA T BETWEEN 60.0 AND 10.0 METERS
WIND MEASURED AT: 10.0 METERS
WIND THRESHOLD AT: 1.00 MPH
JOINT FREQUENCY DISTRIBUTION OF WIND SPEED AND DIRECTION IN HOURS AT 10.00 METERS

SPEED (MPH)	N	NNE	NE	ENE	E	ESE	SE	SSE	S	SSW	SW	WSW	W	WNW	NW	NNW	TOTAL
CALM																	0
1.01- 3.50	0	0	0	0	0	0	0	0	0	0	0	0	0	0	0	0	0
3.51- 7.50	0	1	5	2	5	3	7	5	5	3	0	0	0	1	0	0	37
7.51-12.50	14	0	0	1	0	8	22	29	56	25	1	1	0	5	0	0	162
12.51-18.50	0	0	0	0	0	0	5	0	28	5	0	0	0	3	1	3	45
18.51-24.00	0	0	0	0	0	0	0	0	0	0	0	0	0	0	3	0	3
>24.00	0	0	0	0	0	0	0	0	0	0	0	0	0	0	0	0	0
TOTAL	14	1	5	3	5	11	34	34	89	33	1	1	0	9	4	3	247

STABILITY CLASS B

STABILITY BASED ON: DELTA T BETWEEN 60.0 AND 10.0 METERS
WIND MEASURED AT: 10.0 METERS
WIND THRESHOLD AT: 1.00 MPH
JOINT FREQUENCY DISTRIBUTION OF WIND SPEED AND DIRECTION IN HOURS AT 10.00 METERS

SPEED (MPH)	N	NNE	NE	ENE	E	ESE	SE	SSE	S	SSW	SW	WSW	W	WNW	NW	NNW	TOTAL
CALM																	0
1.01- 3.50	0	0	0	1	0	0	0	0	0	0	0	1	0	0	0	0	2
3.51- 7.50	5	2	7	2	2	11	9	12	10	3	2	2	1	2	0	5	75
7.51-12.50	19	7	4	0	4	5	10	8	12	33	0	0	1	2	1	9	115
12.51-18.50	3	0	0	0	0	0	0	0	0	1	0	0	0	0	1	2	7
18.51-24.00	0	0	0	0	0	0	0	0	0	0	0	0	0	0	1	0	1
>24.00	0	0	0	0	0	0	0	0	0	0	0	0	0	0	0	0	0
TOTAL	27	9	11	3	6	16	19	20	22	37	2	3	2	4	3	16	200

PROGRAM: JFD VERSION: PC-1.2
NPPD-COOPER NUCLEAR STATION JFD:10M WIND VS 10M DELTA T - JUL-SEP 2012
SITE IDENTIFIER: NPPD
DATA PERIOD EXAMINED: 7/ 1/12 - 9/30/12

*** JUL-SEP 2012 ***

STABILITY CLASS C

STABILITY BASED ON: DELTA T BETWEEN 60.0 AND 10.0 METERS
WIND MEASURED AT: 10.0 METERS
WIND THRESHOLD AT: 1.00 MPH
JOINT FREQUENCY DISTRIBUTION OF WIND SPEED AND DIRECTION IN HOURS AT 10.00 METERS

SPEED (MPH)	N	NNE	NE	ENE	E	ESE	SE	SSE	S	SSW	SW	WSW	W	WNW	NW	NNW	TOTAL
CALM																	0
1.01- 3.50	0	1	1	3	0	0	0	0	0	0	0	0	0	0	0	0	5
3.51- 7.50	11	12	10	10	2	7	16	10	10	4	3	0	0	2	0	1	98
7.51-12.50	17	8	2	1	1	2	4	7	8	15	2	0	0	0	1	6	74
12.51-18.50	4	0	0	0	0	0	0	0	1	1	0	0	0	0	1	6	13
18.51-24.00	0	0	0	0	0	0	0	0	0	0	0	0	0	0	0	0	0
>24.00	0	0	0	0	0	0	0	0	0	0	0	0	0	0	0	0	0
TOTAL	32	21	13	14	3	9	20	17	19	20	5	0	0	2	2	13	190

STABILITY CLASS D

STABILITY BASED ON: DELTA T BETWEEN 60.0 AND 10.0 METERS
WIND MEASURED AT: 10.0 METERS
WIND THRESHOLD AT: 1.00 MPH
JOINT FREQUENCY DISTRIBUTION OF WIND SPEED AND DIRECTION IN HOURS AT 10.00 METERS

SPEED (MPH)	N	NNE	NE	ENE	E	ESE	SE	SSE	S	SSW	SW	WSW	W	WNW	NW	NNW	TOTAL
CALM																	0
1.01- 3.50	4	1	9	6	3	1	2	1	3	2	1	0	0	0	1	0	34
3.51- 7.50	31	20	16	9	10	14	28	18	15	12	6	3	2	1	4	7	196
7.51-12.50	46	14	4	0	1	1	18	15	14	13	6	1	0	0	8	10	151
12.51-18.50	10	6	0	0	0	0	2	1	2	0	1	0	0	0	5	23	50
18.51-24.00	1	0	0	0	0	0	0	0	0	0	0	0	0	0	0	1	2
>24.00	0	0	0	0	0	0	0	0	0	0	0	0	0	0	0	0	0
TOTAL	92	41	29	15	14	16	50	35	34	27	14	4	2	1	18	41	433

PROGRAM: JFD VERSION: PC-1.2
NPPD-COOPER NUCLEAR STATION JFD:10M WIND VS 10M DELTA T - JUL-SEP 2012
SITE IDENTIFIER: NPPD
DATA PERIOD EXAMINED: 7/ 1/12 - 9/30/12

*** JUL-SEP 2012 ***

STABILITY CLASS E

STABILITY BASED ON: DELTA T BETWEEN 60.0 AND 10.0 METERS
WIND MEASURED AT: 10.0 METERS
WIND THRESHOLD AT: 1.00 MPH
JOINT FREQUENCY DISTRIBUTION OF WIND SPEED AND DIRECTION IN HOURS AT 10.00 METERS

SPEED (MPH)	N	NNE	NE	ENE	E	ESE	SE	SSE	S	SSW	SW	WSW	W	WNW	NW	NNW	TOTAL
CALM																	0
1.01- 3.50	7	3	8	0	2	2	5	10	31	5	2	3	2	3	9	5	97
3.51- 7.50	61	13	11	10	3	10	18	41	77	18	6	2	2	0	2	18	292
7.51-12.50	31	4	1	0	0	0	3	15	17	0	3	0	0	0	3	16	93
12.51-18.50	3	2	0	0	0	0	1	4	1	0	0	0	0	1	1	1	14
18.51-24.00	0	0	0	0	0	0	0	0	0	0	0	0	0	0	0	0	0
>24.00	0	0	0	0	0	0	0	0	0	0	0	0	0	0	0	1	1
TOTAL	102	22	20	10	5	12	27	70	126	23	11	5	4	4	15	41	497

STABILITY CLASS F

STABILITY BASED ON: DELTA T BETWEEN 60.0 AND 10.0 METERS
WIND MEASURED AT: 10.0 METERS
WIND THRESHOLD AT: 1.00 MPH
JOINT FREQUENCY DISTRIBUTION OF WIND SPEED AND DIRECTION IN HOURS AT 10.00 METERS

SPEED (MPH)	N	NNE	NE	ENE	E	ESE	SE	SSE	S	SSW	SW	WSW	W	WNW	NW	NNW	TOTAL
CALM																	1
1.01- 3.50	14	2	3	2	3	0	4	11	36	26	14	8	9	10	21	19	182
3.51- 7.50	15	8	1	0	0	0	1	7	44	22	2	1	2	2	13	12	130
7.51-12.50	4	0	0	0	0	0	1	0	0	0	1	1	0	0	0	4	11
12.51-18.50	0	0	0	1	0	0	0	0	0	0	0	0	0	0	0	0	1
18.51-24.00	0	0	0	0	0	0	0	0	0	0	0	0	0	0	0	0	0
>24.00	0	0	0	0	0	0	0	0	0	0	0	0	0	0	0	0	0
TOTAL	33	10	4	3	3	0	6	18	80	48	17	10	11	12	34	35	325

PROGRAM: JFD VERSION: PC-1.2
NPPD-COOPER NUCLEAR STATION JFD:10M WIND VS 10M DELTA T - JUL-SEP 2012
SITE IDENTIFIER: NPPD
DATA PERIOD EXAMINED: 7/ 1/12 - 9/30/12

*** JUL-SEP 2012 ***

STABILITY CLASS G

STABILITY BASED ON: DELTA T BETWEEN 60.0 AND 10.0 METERS
WIND MEASURED AT: 10.0 METERS
WIND THRESHOLD AT: 1.00 MPH
JOINT FREQUENCY DISTRIBUTION OF WIND SPEED AND DIRECTION IN HOURS AT 10.00 METERS

SPEED (MPH)	N	NNE	NE	ENE	E	ESE	SE	SSE	S	SSW	SW	WSW	W	WNW	NW	NNW	TOTAL
CALM																	5
1.01- 3.50	23	5	2	2	2	1	9	51	59	26	14	11	9	17	25	30	286
3.51- 7.50	3	2	1	0	0	0	0	0	5	6	0	1	0	0	3	2	23
7.51-12.50	0	0	0	0	0	0	0	0	0	1	0	0	1	0	0	0	2
12.51-18.50	0	0	0	0	0	0	0	0	0	0	0	0	0	0	0	0	0
18.51-24.00	0	0	0	0	0	0	0	0	0	0	0	0	0	0	0	0	0
>24.00	0	0	0	0	0	0	0	0	0	0	0	0	0	0	0	0	0
TOTAL	26	7	3	2	2	1	9	51	64	33	14	12	10	17	28	32	316

STABILITY CLASS ALL

STABILITY BASED ON: DELTA T BETWEEN 60.0 AND 10.0 METERS
WIND MEASURED AT: 10.0 METERS
WIND THRESHOLD AT: 1.00 MPH
JOINT FREQUENCY DISTRIBUTION OF WIND SPEED AND DIRECTION IN HOURS AT 10.00 METERS

SPEED (MPH)	N	NNE	NE	ENE	E	ESE	SE	SSE	S	SSW	SW	WSW	W	WNW	NW	NNW	TOTAL
CALM																	6
1.01- 3.50	48	12	23	14	10	4	20	73	129	59	31	23	20	30	56	54	606
3.51- 7.50	126	58	51	33	22	45	79	93	166	68	19	9	7	8	22	45	851
7.51-12.50	131	33	11	2	6	16	58	74	107	87	13	3	2	7	13	45	608
12.51-18.50	20	8	0	1	0	0	8	5	32	7	1	0	0	4	9	35	130
18.51-24.00	1	0	0	0	0	0	0	0	0	0	0	0	0	0	4	1	6
>24.00	0	0	0	0	0	0	0	0	0	0	0	0	0	0	0	1	1
TOTAL	326	111	85	50	38	65	165	245	434	221	64	35	29	49	104	181	2208

PROGRAM: JFD VERSION: PC-1.2
NPPD-COOPER NUCLEAR STATION JFD:10M WIND VS 10M DELTA T - JUL-SEP 2012
SITE IDENTIFIER: NPPD
DATA PERIOD EXAMINED: 7/ 1/12 - 9/30/12

*** JUL-SEP 2012 ***

STABILITY BASED ON: DELTA T BETWEEN 60.0 AND 10.0 METERS
WIND MEASURED AT: 10.0 METERS
WIND THRESHOLD AT: 1.00 MPH

TOTAL NUMBER OF OBSERVATIONS: 2208

TOTAL NUMBER OF VALID OBSERVATIONS: 2208

TOTAL NUMBER OF MISSING OBSERVATIONS: 0

PERCENT DATA RECOVERY FOR THIS PERIOD: 100.0 %

MEAN WIND SPEED FOR THIS PERIOD: 6.3 MPH

TOTAL NUMBER OF OBSERVATIONS WITH BACKUP DATA: 0

PERCENTAGE OCCURRENCE OF STABILITY CLASSES

A	B	C	D	E	F	G
11.19	9.06	8.61	19.61	22.51	14.72	14.31

DISTRIBUTION OF WIND DIRECTION VS STABILITY

	N	NNE	NE	ENE	E	ESE	SE	SSE	S	SSW	SW	WSW	W	WNW	NW	NNW	CALM
A	14	1	5	3	5	11	34	34	89	33	1	1	0	9	4	3	0
B	27	9	11	3	6	16	19	20	22	37	2	3	2	4	3	16	0
C	32	21	13	14	3	9	20	17	19	20	5	0	0	2	2	13	0
D	92	41	29	15	14	16	50	35	34	27	14	4	2	1	18	41	0
E	102	22	20	10	5	12	27	70	126	23	11	5	4	4	15	41	0
F	33	10	4	3	3	0	6	18	80	48	17	10	11	12	34	35	1
G	26	7	3	2	2	1	9	51	64	33	14	12	10	17	28	32	5
TOTAL	326	111	85	50	38	65	165	245	434	221	64	35	29	49	104	181	6

JFDs of 10-Meter Wind vs. Delta T

October-December 2012

PROGRAM: JFD VERSION: PC-1.2
NPPD-COOPER NUCLEAR STATION JFD:10M WIND VS 10M DELTA T - OCT-DEC 2012
SITE IDENTIFIER: NPPD
DATA PERIOD EXAMINED: 10/ 1/12 -12/31/12

*** OCT-DEC 2012 ***

STABILITY CLASS A

STABILITY BASED ON: DELTA T BETWEEN 60.0 AND 10.0 METERS
WIND MEASURED AT: 10.0 METERS
WIND THRESHOLD AT: 1.00 MPH
JOINT FREQUENCY DISTRIBUTION OF WIND SPEED AND DIRECTION IN HOURS AT 10.00 METERS

SPEED (MPH)	N	NNE	NE	ENE	E	ESE	SE	SSE	S	SSW	SW	WSW	W	WNW	NW	NNW	TOTAL
CALM																	0
1.01- 3.50	0	0	0	0	0	0	0	0	0	0	0	0	0	0	0	0	0
3.51- 7.50	0	0	0	0	0	0	0	0	0	0	0	0	0	0	0	0	0
7.51-12.50	0	0	0	0	1	0	0	0	1	1	1	1	0	0	0	0	5
12.51-18.50	1	0	0	0	0	0	1	2	5	4	0	0	0	0	0	0	13
18.51-24.00	1	0	0	0	0	0	0	0	0	0	0	0	0	0	0	0	1
>24.00	0	0	0	0	0	0	0	0	1	0	0	0	0	0	0	0	1
TOTAL	2	0	0	0	1	0	1	2	7	5	1	1	0	0	0	0	20

STABILITY CLASS B

STABILITY BASED ON: DELTA T BETWEEN 60.0 AND 10.0 METERS
WIND MEASURED AT: 10.0 METERS
WIND THRESHOLD AT: 1.00 MPH
JOINT FREQUENCY DISTRIBUTION OF WIND SPEED AND DIRECTION IN HOURS AT 10.00 METERS

SPEED (MPH)	N	NNE	NE	ENE	E	ESE	SE	SSE	S	SSW	SW	WSW	W	WNW	NW	NNW	TOTAL
CALM																	0
1.01- 3.50	0	0	0	0	0	0	0	0	0	0	0	0	0	0	0	0	0
3.51- 7.50	0	0	0	0	0	2	1	1	0	1	3	1	0	0	0	1	10
7.51-12.50	2	0	0	0	1	2	5	4	4	2	0	2	1	0	0	1	24
12.51-18.50	5	0	0	0	0	1	0	4	7	2	0	0	0	0	0	1	20
18.51-24.00	0	0	0	0	0	0	0	0	4	2	0	0	0	0	0	0	6
>24.00	0	0	0	0	0	0	0	0	0	0	0	0	0	0	0	0	0
TOTAL	7	0	0	0	1	5	6	9	15	7	3	3	1	0	0	3	60

PROGRAM: JFD VERSION: PC-1.2
NPPD-COOPER NUCLEAR STATION JFD:10M WIND VS 10M DELTA T - OCT-DEC 2012
SITE IDENTIFIER: NPPD
DATA PERIOD EXAMINED: 10/ 1/12 -12/31/12

*** OCT-DEC 2012 ***

STABILITY CLASS C

STABILITY BASED ON: DELTA T BETWEEN 60.0 AND 10.0 METERS
WIND MEASURED AT: 10.0 METERS
WIND THRESHOLD AT: 1.00 MPH
JOINT FREQUENCY DISTRIBUTION OF WIND SPEED AND DIRECTION IN HOURS AT 10.00 METERS

SPEED (MPH)	N	NNE	NE	ENE	E	ESE	SE	SSE	S	SSW	SW	WSW	W	WNW	NW	NNW	TOTAL
CALM																	0
1.01- 3.50	0	0	0	0	0	1	0	3	0	0	0	0	0	0	0	0	4
3.51- 7.50	2	3	1	1	0	4	4	2	4	1	1	3	0	0	0	1	27
7.51-12.50	10	2	0	0	4	5	7	3	5	3	2	2	0	2	1	8	54
12.51-18.50	6	0	0	0	0	0	1	10	5	4	1	0	0	0	5	10	42
18.51-24.00	0	0	0	0	0	0	0	0	6	2	0	0	0	0	3	2	13
>24.00	0	0	0	0	0	0	0	0	2	1	0	0	0	0	1	0	4
TOTAL	18	5	1	1	4	10	12	18	22	11	4	5	0	2	10	21	144

STABILITY CLASS D

STABILITY BASED ON: DELTA T BETWEEN 60.0 AND 10.0 METERS
WIND MEASURED AT: 10.0 METERS
WIND THRESHOLD AT: 1.00 MPH
JOINT FREQUENCY DISTRIBUTION OF WIND SPEED AND DIRECTION IN HOURS AT 10.00 METERS

SPEED (MPH)	N	NNE	NE	ENE	E	ESE	SE	SSE	S	SSW	SW	WSW	W	WNW	NW	NNW	TOTAL
CALM																	1
1.01- 3.50	1	0	3	4	6	5	7	4	4	2	2	3	0	1	1	1	44
3.51- 7.50	32	13	12	6	4	15	25	7	11	4	7	13	10	6	23	33	221
7.51-12.50	49	26	4	6	3	20	18	29	16	15	7	11	9	24	41	51	329
12.51-18.50	17	8	2	1	0	0	2	20	13	11	5	6	3	12	44	33	177
18.51-24.00	3	0	0	0	0	0	0	1	3	4	0	0	4	10	40	10	75
>24.00	6	0	0	0	0	0	0	0	9	2	0	0	1	4	3	0	25
TOTAL	108	47	21	17	13	40	52	61	56	38	21	33	27	57	152	128	872

PROGRAM: JFD VERSION: PC-1.2
NPPD-COOPER NUCLEAR STATION JFD:10M WIND VS 10M DELTA T - OCT-DEC 2012
SITE IDENTIFIER: NPPD
DATA PERIOD EXAMINED: 10/ 1/12 -12/31/12

*** OCT-DEC 2012 ***

STABILITY CLASS E

STABILITY BASED ON: DELTA T BETWEEN 60.0 AND 10.0 METERS
WIND MEASURED AT: 10.0 METERS
WIND THRESHOLD AT: 1.00 MPH
JOINT FREQUENCY DISTRIBUTION OF WIND SPEED AND DIRECTION IN HOURS AT 10.00 METERS

SPEED (MPH)	N	NNE	NE	ENE	E	ESE	SE	SSE	S	SSW	SW	WSW	W	WNW	NW	NNW	TOTAL
CALM																	0
1.01- 3.50	11	4	1	1	6	2	8	8	9	9	7	3	2	5	5	6	87
3.51- 7.50	44	4	2	2	8	13	35	24	33	21	3	6	12	10	12	22	251
7.51-12.50	16	3	0	0	0	1	18	32	57	16	7	7	2	15	7	16	197
12.51-18.50	0	0	0	0	0	0	0	14	14	1	0	0	7	1	3	4	44
18.51-24.00	0	0	0	0	0	0	0	0	7	2	0	0	0	0	1	0	10
>24.00	0	0	0	0	0	0	0	0	5	0	0	0	0	0	1	0	6
TOTAL	71	11	3	3	14	16	61	78	125	49	17	16	23	31	29	48	595

STABILITY CLASS F

STABILITY BASED ON: DELTA T BETWEEN 60.0 AND 10.0 METERS
WIND MEASURED AT: 10.0 METERS
WIND THRESHOLD AT: 1.00 MPH
JOINT FREQUENCY DISTRIBUTION OF WIND SPEED AND DIRECTION IN HOURS AT 10.00 METERS

SPEED (MPH)	N	NNE	NE	ENE	E	ESE	SE	SSE	S	SSW	SW	WSW	W	WNW	NW	NNW	TOTAL
CALM																	5
1.01- 3.50	7	2	1	2	4	2	5	24	24	13	11	4	3	11	8	7	128
3.51- 7.50	5	0	0	1	0	1	5	9	38	10	3	2	1	4	14	7	100
7.51-12.50	0	0	0	0	0	0	0	1	17	2	1	0	0	6	6	0	33
12.51-18.50	0	0	0	0	0	0	0	0	2	0	0	0	0	0	0	0	2
18.51-24.00	0	0	0	0	0	0	0	0	0	0	0	0	0	0	0	0	0
>24.00	0	0	0	0	0	0	0	0	0	0	0	0	0	0	0	0	0
TOTAL	12	2	1	3	4	3	10	34	81	25	15	6	4	21	28	14	268

PROGRAM: JFD VERSION: PC-1.2
NPPD-COOPER NUCLEAR STATION JFD:10M WIND VS 10M DELTA T - OCT-DEC 2012
SITE IDENTIFIER: NPPD
DATA PERIOD EXAMINED: 10/ 1/12 -12/31/12

*** OCT-DEC 2012 ***

STABILITY CLASS G

STABILITY BASED ON: DELTA T BETWEEN 60.0 AND 10.0 METERS
WIND MEASURED AT: 10.0 METERS
WIND THRESHOLD AT: 1.00 MPH
JOINT FREQUENCY DISTRIBUTION OF WIND SPEED AND DIRECTION IN HOURS AT 10.00 METERS

SPEED (MPH)	N	NNE	NE	ENE	E	ESE	SE	SSE	S	SSW	SW	WSW	W	WNW	NW	NNW	TOTAL
CALM																	26
1.01- 3.50	6	7	3	2	0	4	7	25	49	21	13	11	12	6	17	22	205
3.51- 7.50	0	0	0	0	0	0	0	2	5	1	0	0	0	1	2	1	12
7.51-12.50	0	0	0	0	0	0	0	0	0	0	0	0	0	0	0	0	0
12.51-18.50	0	0	0	0	0	0	0	0	1	0	0	0	0	0	0	1	2
18.51-24.00	0	0	0	0	0	0	0	0	0	0	0	0	0	0	1	0	1
>24.00	0	0	0	0	0	0	0	0	0	0	0	0	0	0	0	0	0
TOTAL	6	7	3	2	0	4	7	27	55	22	13	11	12	7	20	24	246

STABILITY CLASS ALL

STABILITY BASED ON: DELTA T BETWEEN 60.0 AND 10.0 METERS
WIND MEASURED AT: 10.0 METERS
WIND THRESHOLD AT: 1.00 MPH
JOINT FREQUENCY DISTRIBUTION OF WIND SPEED AND DIRECTION IN HOURS AT 10.00 METERS

SPEED (MPH)	N	NNE	NE	ENE	E	ESE	SE	SSE	S	SSW	SW	WSW	W	WNW	NW	NNW	TOTAL
CALM																	32
1.01- 3.50	25	13	8	9	16	14	27	64	86	45	33	21	17	23	31	36	468
3.51- 7.50	83	20	15	10	12	35	70	45	91	38	17	25	23	21	51	65	621
7.51-12.50	77	31	4	6	9	28	48	69	100	39	18	23	12	47	55	76	642
12.51-18.50	29	8	2	1	0	1	4	50	47	22	6	6	10	13	52	49	300
18.51-24.00	4	0	0	0	0	0	0	1	20	10	0	0	4	10	45	12	106
>24.00	6	0	0	0	0	0	0	0	17	3	0	0	1	4	5	0	36
TOTAL	224	72	29	26	37	78	149	229	361	157	74	75	67	118	239	238	2205

PROGRAM: JFD VERSION: PC-1.2
NPPD-COOPER NUCLEAR STATION JFD:10M WIND VS 10M DELTA T - OCT-DEC 2012
SITE IDENTIFIER: NPPD
DATA PERIOD EXAMINED: 10/ 1/12 - 12/31/12

*** OCT-DEC 2012 ***

STABILITY BASED ON: DELTA T BETWEEN 60.0 AND 10.0 METERS
WIND MEASURED AT: 10.0 METERS
WIND THRESHOLD AT: 1.00 MPH

TOTAL NUMBER OF OBSERVATIONS: 2208

TOTAL NUMBER OF VALID OBSERVATIONS: 2205

TOTAL NUMBER OF MISSING OBSERVATIONS: 3

PERCENT DATA RECOVERY FOR THIS PERIOD: 99.9 %

MEAN WIND SPEED FOR THIS PERIOD: 8.4 MPH

TOTAL NUMBER OF OBSERVATIONS WITH BACKUP DATA: 0

PERCENTAGE OCCURRENCE OF STABILITY CLASSES

A	B	C	D	E	F	G
.91	2.72	6.53	39.55	26.98	12.15	11.16

DISTRIBUTION OF WIND DIRECTION VS STABILITY

	N	NNE	NE	ENE	E	ESE	SE	SSE	S	SSW	SW	WSW	W	WNW	NW	NNW	CALM
A	2	0	0	0	1	0	1	2	7	5	1	1	0	0	0	0	0
B	7	0	0	0	1	5	6	9	15	7	3	3	1	0	0	3	0
C	18	5	1	1	4	10	12	18	22	11	4	5	0	2	10	21	0
D	108	47	21	17	13	40	52	61	56	38	21	33	27	57	152	128	1
E	71	11	3	3	14	16	61	78	125	49	17	16	23	31	29	48	0
F	12	2	1	3	4	3	10	34	81	25	15	6	4	21	28	14	5
G	6	7	3	2	0	4	7	27	55	22	13	11	12	7	20	24	26
TOTAL	224	72	29	26	37	78	149	229	361	157	74	75	67	118	239	238	32

JFDs of 10-Meter Wind vs. Delta T

July-December 2012

PROGRAM: JFD VERSION: PC-1.2
NPPD-COOPER NUCLEAR STATION JFD:10M WIND VS 10M DELTA T - JUL-DEC 2012
SITE IDENTIFIER: NPPD
DATA PERIOD EXAMINED: 7/ 1/12 -12/31/12

*** JUL-DEC 2012 ***

STABILITY CLASS A

STABILITY BASED ON: DELTA T BETWEEN 60.0 AND 10.0 METERS
WIND MEASURED AT: 10.0 METERS
WIND THRESHOLD AT: 1.00 MPH
JOINT FREQUENCY DISTRIBUTION OF WIND SPEED AND DIRECTION IN HOURS AT 10.00 METERS

SPEED (MPH)	N	NNE	NE	ENE	E	ESE	SE	SSE	S	SSW	SW	WSW	W	WNW	NW	NNW	TOTAL
CALM																	0
1.01- 3.50	0	0	0	0	0	0	0	0	0	0	0	0	0	0	0	0	0
3.51- 7.50	0	1	5	2	5	3	7	5	5	3	0	0	0	1	0	0	37
7.51-12.50	14	0	0	1	1	8	22	29	57	26	2	2	0	5	0	0	167
12.51-18.50	1	0	0	0	0	0	6	2	33	9	0	0	0	3	1	3	58
18.51-24.00	1	0	0	0	0	0	0	0	0	0	0	0	0	0	3	0	4
>24.00	0	0	0	0	0	0	0	0	1	0	0	0	0	0	0	0	1
TOTAL	16	1	5	3	6	11	35	36	96	38	2	2	0	9	4	3	267

STABILITY CLASS B

STABILITY BASED ON: DELTA T BETWEEN 60.0 AND 10.0 METERS
WIND MEASURED AT: 10.0 METERS
WIND THRESHOLD AT: 1.00 MPH
JOINT FREQUENCY DISTRIBUTION OF WIND SPEED AND DIRECTION IN HOURS AT 10.00 METERS

SPEED (MPH)	N	NNE	NE	ENE	E	ESE	SE	SSE	S	SSW	SW	WSW	W	WNW	NW	NNW	TOTAL
CALM																	0
1.01- 3.50	0	0	0	1	0	0	0	0	0	0	0	1	0	0	0	0	2
3.51- 7.50	5	2	7	2	2	13	10	13	10	4	5	3	1	2	0	6	85
7.51-12.50	21	7	4	0	5	7	15	12	16	35	0	2	2	2	1	10	139
12.51-18.50	8	0	0	0	0	1	0	4	7	3	0	0	0	0	1	3	27
18.51-24.00	0	0	0	0	0	0	0	0	4	2	0	0	0	0	1	0	7
>24.00	0	0	0	0	0	0	0	0	0	0	0	0	0	0	0	0	0
TOTAL	34	9	11	3	7	21	25	29	37	44	5	6	3	4	3	19	260

PROGRAM: JFD VERSION: PC-1.2
NPPD-COOPER NUCLEAR STATION JFD:10M WIND VS 10M DELTA T - JUL-DEC 2012
SITE IDENTIFIER: NPPD
DATA PERIOD EXAMINED: 7/ 1/12 -12/31/12

*** JUL-DEC 2012 ***

STABILITY CLASS C

STABILITY BASED ON: DELTA T BETWEEN 60.0 AND 10.0 METERS
WIND MEASURED AT: 10.0 METERS
WIND THRESHOLD AT: 1.00 MPH
JOINT FREQUENCY DISTRIBUTION OF WIND SPEED AND DIRECTION IN HOURS AT 10.00 METERS

SPEED (MPH)	N	NNE	NE	ENE	E	ESE	SE	SSE	S	SSW	SW	WSW	W	WNW	NW	NNW	TOTAL
CALM																	0
1.01- 3.50	0	1	1	3	0	1	0	3	0	0	0	0	0	0	0	0	9
3.51- 7.50	13	15	11	11	2	11	20	12	14	5	4	3	0	2	0	2	125
7.51-12.50	27	10	2	1	5	7	11	10	13	18	4	2	0	2	2	14	128
12.51-18.50	10	0	0	0	0	0	1	10	6	5	1	0	0	0	6	16	55
18.51-24.00	0	0	0	0	0	0	0	0	6	2	0	0	0	0	3	2	13
>24.00	0	0	0	0	0	0	0	0	2	1	0	0	0	0	1	0	4
TOTAL	50	26	14	15	7	19	32	35	41	31	9	5	0	4	12	34	334

STABILITY CLASS D

STABILITY BASED ON: DELTA T BETWEEN 60.0 AND 10.0 METERS
WIND MEASURED AT: 10.0 METERS
WIND THRESHOLD AT: 1.00 MPH
JOINT FREQUENCY DISTRIBUTION OF WIND SPEED AND DIRECTION IN HOURS AT 10.00 METERS

SPEED (MPH)	N	NNE	NE	ENE	E	ESE	SE	SSE	S	SSW	SW	WSW	W	WNW	NW	NNW	TOTAL
CALM																	1
1.01- 3.50	5	1	12	10	9	6	9	5	7	4	3	3	0	1	2	1	78
3.51- 7.50	63	33	28	15	14	29	53	25	26	16	13	16	12	7	27	40	417
7.51-12.50	95	40	8	6	4	21	36	44	30	28	13	12	9	24	49	61	480
12.51-18.50	27	14	2	1	0	0	4	21	15	11	6	6	3	12	49	56	227
18.51-24.00	4	0	0	0	0	0	0	1	3	4	0	0	4	10	40	11	77
>24.00	6	0	0	0	0	0	0	0	9	2	0	0	1	4	3	0	25
TOTAL	200	88	50	32	27	56	102	96	90	65	35	37	29	58	170	169	1305

PROGRAM: JFD VERSION: PC-1.2
NPPD-COOPER NUCLEAR STATION JFD:10M WIND VS 10M DELTA T - JUL-DEC 2012
SITE IDENTIFIER: NPPD
DATA PERIOD EXAMINED: 7/ 1/12 -12/31/12

*** JUL-DEC 2012 ***

STABILITY CLASS E

STABILITY BASED ON: DELTA T BETWEEN 60.0 AND 10.0 METERS
WIND MEASURED AT: 10.0 METERS
WIND THRESHOLD AT: 1.00 MPH
JOINT FREQUENCY DISTRIBUTION OF WIND SPEED AND DIRECTION IN HOURS AT 10.00 METERS

SPEED (MPH)	N	NNE	NE	ENE	E	ESE	SE	SSE	S	SSW	SW	WSW	W	WNW	NW	NNW	TOTAL
CALM																	0
1.01- 3.50	18	7	9	1	8	4	13	18	40	14	9	6	4	8	14	11	184
3.51- 7.50	105	17	13	12	11	23	53	65	110	39	9	8	14	10	14	40	543
7.51-12.50	47	7	1	0	0	1	21	47	74	16	10	7	2	15	10	32	290
12.51-18.50	3	2	0	0	0	0	1	18	15	1	0	0	7	2	4	5	58
18.51-24.00	0	0	0	0	0	0	0	0	7	2	0	0	0	0	1	0	10
>24.00	0	0	0	0	0	0	0	0	5	0	0	0	0	0	1	1	7
TOTAL	173	33	23	13	19	28	88	148	251	72	28	21	27	35	44	89	1092

STABILITY CLASS F

STABILITY BASED ON: DELTA T BETWEEN 60.0 AND 10.0 METERS
WIND MEASURED AT: 10.0 METERS
WIND THRESHOLD AT: 1.00 MPH
JOINT FREQUENCY DISTRIBUTION OF WIND SPEED AND DIRECTION IN HOURS AT 10.00 METERS

SPEED (MPH)	N	NNE	NE	ENE	E	ESE	SE	SSE	S	SSW	SW	WSW	W	WNW	NW	NNW	TOTAL
CALM																	6
1.01- 3.50	21	4	4	4	7	2	9	35	60	39	25	12	12	21	29	26	310
3.51- 7.50	20	8	1	1	0	1	6	16	82	32	5	3	3	6	27	19	230
7.51-12.50	4	0	0	0	0	0	1	1	17	2	2	1	0	6	6	4	44
12.51-18.50	0	0	0	1	0	0	0	0	2	0	0	0	0	0	0	0	3
18.51-24.00	0	0	0	0	0	0	0	0	0	0	0	0	0	0	0	0	0
>24.00	0	0	0	0	0	0	0	0	0	0	0	0	0	0	0	0	0
TOTAL	45	12	5	6	7	3	16	52	161	73	32	16	15	33	62	49	593

PROGRAM: JFD VERSION: PC-1.2
NPPD-COOPER NUCLEAR STATION JFD:10M WIND VS 10M DELTA T - JUL-DEC 2012
SITE IDENTIFIER: NPPD
DATA PERIOD EXAMINED: 7/ 1/12 -12/31/12

*** JUL-DEC 2012 ***

STABILITY CLASS G

STABILITY BASED ON: DELTA T BETWEEN 60.0 AND 10.0 METERS
WIND MEASURED AT: 10.0 METERS
WIND THRESHOLD AT: 1.00 MPH
JOINT FREQUENCY DISTRIBUTION OF WIND SPEED AND DIRECTION IN HOURS AT 10.00 METERS

SPEED (MPH)	N	NNE	NE	ENE	E	ESE	SE	SSE	S	SSW	SW	WSW	W	WNW	NW	NNW	TOTAL
CALM																	31
1.01- 3.50	29	12	5	4	2	5	16	76	108	47	27	22	21	23	42	52	491
3.51- 7.50	3	2	1	0	0	0	0	2	10	7	0	1	0	1	5	3	35
7.51-12.50	0	0	0	0	0	0	0	0	0	1	0	0	1	0	0	0	2
12.51-18.50	0	0	0	0	0	0	0	0	1	0	0	0	0	0	0	1	2
18.51-24.00	0	0	0	0	0	0	0	0	0	0	0	0	0	0	1	0	1
>24.00	0	0	0	0	0	0	0	0	0	0	0	0	0	0	0	0	0
TOTAL	32	14	6	4	2	5	16	78	119	55	27	23	22	24	48	56	562

STABILITY CLASS ALL

STABILITY BASED ON: DELTA T BETWEEN 60.0 AND 10.0 METERS
WIND MEASURED AT: 10.0 METERS
WIND THRESHOLD AT: 1.00 MPH
JOINT FREQUENCY DISTRIBUTION OF WIND SPEED AND DIRECTION IN HOURS AT 10.00 METERS

SPEED (MPH)	N	NNE	NE	ENE	E	ESE	SE	SSE	S	SSW	SW	WSW	W	WNW	NW	NNW	TOTAL
CALM																	38
1.01- 3.50	73	25	31	23	26	18	47	137	215	104	64	44	37	53	87	90	1074
3.51- 7.50	209	78	66	43	34	80	149	138	257	106	36	34	30	29	73	110	1472
7.51-12.50	208	64	15	8	15	44	106	143	207	126	31	26	14	54	68	121	1250
12.51-18.50	49	16	2	2	0	1	12	55	79	29	7	6	10	17	61	84	430
18.51-24.00	5	0	0	0	0	0	0	1	20	10	0	0	4	10	49	13	112
>24.00	6	0	0	0	0	0	0	0	17	3	0	0	1	4	5	1	37
TOTAL	550	183	114	76	75	143	314	474	795	378	138	110	96	167	343	419	4413

PROGRAM: JFD VERSION: PC-1.2
NPPD-COOPER NUCLEAR STATION JFD:10M WIND VS 10M DELTA T - JUL-DEC 2012
SITE IDENTIFIER: NPPD
DATA PERIOD EXAMINED: 7/ 1/12 -12/31/12

*** JUL-DEC 2012 ***

STABILITY BASED ON: DELTA T BETWEEN 60.0 AND 10.0 METERS
WIND MEASURED AT: 10.0 METERS
WIND THRESHOLD AT: 1.00 MPH

TOTAL NUMBER OF OBSERVATIONS: 4416

TOTAL NUMBER OF VALID OBSERVATIONS: 4413

TOTAL NUMBER OF MISSING OBSERVATIONS: 3

PERCENT DATA RECOVERY FOR THIS PERIOD: 99.9 %

MEAN WIND SPEED FOR THIS PERIOD: 7.3 MPH

TOTAL NUMBER OF OBSERVATIONS WITH BACKUP DATA: 0

PERCENTAGE OCCURRENCE OF STABILITY CLASSES

A	B	C	D	E	F	G
6.05	5.89	7.57	29.57	24.75	13.44	12.74

DISTRIBUTION OF WIND DIRECTION VS STABILITY

	N	NNE	NE	ENE	E	ESE	SE	SSE	S	SSW	SW	WSW	W	WNW	NW	NNW	CALM
A	16	1	5	3	6	11	35	36	96	38	2	2	0	9	4	3	0
B	34	9	11	3	7	21	25	29	37	44	5	6	3	4	3	19	0
C	50	26	14	15	7	19	32	35	41	31	9	5	0	4	12	34	0
D	200	88	50	32	27	56	102	96	90	65	35	37	29	58	170	169	1
E	173	33	23	13	19	28	88	148	251	72	28	21	27	35	44	89	0
F	45	12	5	6	7	3	16	52	161	73	32	16	15	33	62	49	6
G	32	14	6	4	2	5	16	78	119	55	27	23	22	24	48	56	31
TOTAL	550	183	114	76	75	143	314	474	795	378	138	110	96	167	343	419	38

Stability Classes by Hour of Day

10-Meter Wind vs. Delta T

July-December 2012

PROGRAM: JFD VERSION: PC-1.2
NPPD-COOPER NUCLEAR STATION JFD:10M WIND VS 10M DELTA T - JUL-DEC 2012
SITE IDENTIFIER: NPPD
DATA PERIOD EXAMINED: 7/ 1/12 - 12/31/12
STABILITY BASED ON: DELTA T BETWEEN 60.0 AND 10.0 METERS

HOURLY STABILITIES

YR	MN	DY	1	2	3	4	5	6	7	8	9	10	11	12	13	14	15	16	17	18	19	20	21	22	23	24
			HOURS																							
12	7	1	E	E	G	F	F	F	F	D	D	B	D	B	A	A	A	A	A	B	C	E	E	F	F	E
12	7	2	E	E	E	E	E	E	E	D	C	A	A	A	A	A	A	A	A	B	D	E	F	F	E	E
12	7	3	E	E	E	E	E	E	E	D	D	B	B	A	A	A	A	A	D	D	D	E	E	F	F	F
12	7	4	F	F	F	F	F	E	D	D	C	B	A	A	A	A	A	A	B	C	D	E	F	F	E	E
12	7	5	E	E	E	E	E	F	E	D	C	B	A	A	A	A	A	A	A	B	D	E	E	F	E	F
12	7	6	E	F	F	F	F	F	E	D	D	C	A	A	A	A	A	A	A	B	D	E	F	F	G	G
12	7	7	F	F	F	F	F	F	G	E	D	D	D	C	A	B	D	B	C	D	D	D	D	D	D	D
12	7	8	D	D	E	D	D	D	D	C	B	B	D	D	B	D	D	D	C	C	D	D	E	E	E	E
12	7	9	E	E	E	D	D	E	D	D	C	C	B	B	C	C	B	B	C	C	D	E	E	E	E	E
12	7	10	E	E	E	E	E	E	E	D	C	C	B	B	A	A	A	B	B	C	D	E	E	E	E	E
12	7	11	E	E	E	E	F	E	E	D	C	C	A	A	A	A	B	B	C	C	D	E	G	G	G	G
12	7	12	G	G	G	F	F	E	D	D	C	A	A	B	A	A	A	B	B	A	C	E	E	E	E	F
12	7	13	F	G	G	F	F	F	E	D	B	B	B	A	A	A	A	A	C	B	B	D	E	E	E	E
12	7	14	E	E	E	E	F	E	E	D	C	B	A	B	B	A	A	A	B	D	E	E	F	F	G	G
12	7	15	F	F	E	E	E	E	E	C	B	A	A	A	A	A	A	A	A	A	C	D	E	E	F	E
12	7	16	E	F	E	E	F	E	E	D	B	A	A	A	A	A	A	A	A	A	B	D	E	E	F	E
12	7	17	E	E	E	E	E	E	E	C	A	A	A	A	A	A	A	A	A	B	D	E	F	F	F	F
12	7	18	F	E	E	E	F	E	E	C	A	B	D	D	D	A	C	D	D	D	E	E	F	F	G	G
12	7	19	G	G	G	G	F	G	F	D	D	B	A	A	B	A	B	B	C	C	D	E	F	F	F	G
12	7	20	F	E	E	E	E	E	D	C	B	B	A	A	A	A	A	A	A	C	D	E	G	G	G	G
12	7	21	F	F	E	F	E	E	E	D	A	A	B	A	A	A	A	A	A	B	D	E	F	G	F	F
12	7	22	E	E	E	E	F	F	E	D	D	B	B	A	B	C	B	B	A	C	D	F	F	F	F	F
12	7	23	F	F	F	G	G	G	G	E	C	C	C	A	C	A	A	A	A	B	D	E	F	F	F	F
12	7	24	F	F	F	F	E	E	E	D	B	C	B	A	A	A	A	A	A	B	D	E	E	E	E	E
12	7	25	E	E	E	E	E	E	E	D	C	A	B	B	A	C	C	B	D	E	E	F	F	E	G	E
12	7	26	E	E	E	E	E	E	E	D	D	D	C	C	C	B	B	B	D	D	D	D	E	F	F	G
12	7	27	G	E	E	E	E	E	E	D	D	C	B	B	A	B	A	C	C	D	D	E	E	F	F	F
12	7	28	F	E	E	E	E	E	D	D	C	B	A	A	A	A	A	A	A	C	D	D	D	D	D	D
12	7	29	E	D	E	E	E	E	D	D	B	B	B	B	A	C	B	C	C	D	D	E	F	G	F	E
12	7	30	E	F	F	E	E	E	E	G	D	D	D	D	D	C	C	D	D	D	C	E	F	G	G	G
12	7	31	G	G	G	G	G	G	G	E	E	D	B	C	B	B	B	C	C	C	E	F	G	G	G	F
12	8	1	E	E	E	E	E	E	D	D	D	C	C	C	B	A	A	A	B	B	D	F	G	G	G	G
12	8	2	F	F	E	E	D	E	E	E	D	D	C	C	B	B	A	C	C	D	D	E	G	G	G	G
12	8	3	G	G	G	F	F	F	E	D	D	D	C	C	C	B	A	A	A	A	D	E	F	F	E	E
12	8	4	E	E	E	F	E	E	D	E	D	D	C	C	B	C	C	C	D	E	D	E	F	F	F	G
12	8	5	G	G	G	F	F	F	F	D	D	D	B	B	B	B	B	B	D	D	D	E	F	F	F	G
12	8	6	G	G	G	G	F	F	F	D	D	A	A	A	A	A	A	A	A	B	D	F	F	G	G	F
12	8	7	F	F	F	F	F	F	F	E	C	A	A	C	C	B	C	C	D	D	E	F	G	F	E	E
12	8	8	D	E	E	E	D	E	F	E	D	B	B	A	A	A	B	C	F	G	F	F	E	F	F	F
12	8	9	E	F	F	F	E	E	D	D	D	D	C	C	B	B	B	C	C	D	E	E	F	E	E	E
12	8	10	E	E	E	E	E	E	E	D	D	C	B	A	A	B	A	B	C	C	D	E	E	F	F	G
12	8	11	G	G	G	G	G	G	G	E	D	B	A	A	B	A	B	B	C	D	E	E	E	F	E	E
12	8	12	D	E	D	E	E	D	D	D	D	A	A	A	A	A	C	D	D	D	D	D	D	D	E	D
12	8	13	D	D	D	D	D	D	D	D	D	D	D	D	C	B	B	B	C	D	D	F	G	G	G	G

PROGRAM: JFD VERSION: PC-1.2
NPPD-COOPER NUCLEAR STATION JFD:10M WIND VS 10M DELTA T - JUL-DEC 2012
SITE IDENTIFIER: NPPD
DATA PERIOD EXAMINED: 7/ 1/12 - 12/31/12
STABILITY BASED ON: DELTA T BETWEEN 60.0 AND 10.0 METERS

HOURLY STABILITIES

YR	MN	DY	1	2	3	4	5	6	7	8	9	10	11	12	13	14	15	16	17	18	19	20	21	22	23	24
			HOURS																							
12	8	14	G	G	G	F	G	G	F	E	E	D	B	A	A	A	A	A	A	A	D	D	E	E	E	E
12	8	15	D	E	E	E	E	E	E	D	A	A	A	A	A	A	A	A	A	C	D	E	F	F	E	E
12	8	16	F	F	E	D	D	D	D	D	D	D	C	D	D	D	C	C	D	D	E	E	F	G	G	G
12	8	17	G	G	G	G	G	G	G	E	D	D	B	B	B	B	B	C	C	D	D	F	G	F	G	G
12	8	18	G	G	G	G	G	G	G	F	D	D	C	D	D	B	C	C	D	D	D	D	D	D	E	E
12	8	19	E	D	E	E	E	E	E	D	C	B	B	A	A	A	A	B	C	D	E	F	G	G	G	G
12	8	20	G	G	G	G	G	G	G	F	E	C	B	B	A	B	D	B	D	D	E	F	F	F	G	F
12	8	21	E	E	E	F	F	F	E	D	C	C	B	B	B	B	C	C	D	C	D	F	G	G	G	G
12	8	22	F	G	G	G	G	G	F	F	D	B	A	A	A	A	A	B	D	D	E	F	G	F	F	G
12	8	23	G	G	F	G	F	F	F	E	C	A	A	A	A	A	B	D	D	D	E	E	E	E	E	D
12	8	24	E	E	E	D	D	D	D	D	D	C	B	A	A	B	D	D	D	D	D	E	E	E	D	D
12	8	25	E	D	D	D	D	D	D	D	D	E	E	E	E	D	E	E	E	E	E	E	E	F	F	F
12	8	26	F	F	F	F	F	F	F	F	F	F	D	D	D	D	D	D	D	D	E	F	G	G	G	G
12	8	27	G	G	G	G	G	G	G	F	D	D	D	D	D	C	B	C	C	D	E	G	G	G	G	G
12	8	28	G	G	G	G	G	G	G	F	E	D	B	B	B	B	B	B	C	D	E	F	F	F	G	G
12	8	29	F	F	F	F	F	G	F	F	E	D	B	A	A	A	B	B	C	D	E	F	F	G	F	F
12	8	30	F	F	F	F	F	F	F	E	D	C	B	B	B	B	B	A	B	D	F	G	G	G	G	G
12	8	31	G	G	G	G	G	G	G	F	D	D	D	C	B	B	B	B	C	D	D	E	E	E	E	E
12	9	1	E	E	E	E	E	E	E	D	D	C	D	D	D	C	C	D	D	D	D	E	E	E	E	F
12	9	2	F	F	F	F	G	G	F	E	D	D	D	C	C	B	B	B	A	C	D	F	F	F	E	E
12	9	3	E	E	F	F	F	E	F	E	D	C	D	C	C	B	B	D	D	D	D	D	D	E	D	D
12	9	4	E	E	E	E	E	E	E	D	D	B	A	A	B	A	A	A	A	C	E	E	E	E	F	F
12	9	5	G	G	F	F	F	G	G	F	D	B	B	C	B	C	C	D	D	E	F	F	F	F	F	F
12	9	6	F	F	E	E	F	G	G	F	D	D	B	A	A	A	A	A	A	C	D	E	E	E	E	E
12	9	7	E	E	E	E	E	E	E	D	D	D	D	D	E	E	D	D	D	D	E	F	F	F	F	E
12	9	8	E	F	F	G	G	F	E	D	D	A	A	A	A	A	A	A	D	D	F	G	G	G	F	E
12	9	9	E	E	E	E	E	E	E	D	D	C	B	C	B	B	C	B	C	D	D	F	F	G	G	G
12	9	10	G	F	G	F	F	F	F	E	C	A	A	A	A	A	A	A	A	C	E	E	E	E	E	E
12	9	11	E	E	E	E	E	E	E	D	B	A	A	A	A	A	A	A	C	D	D	E	E	E	E	E
12	9	12	D	E	D	D	D	D	E	E	D	C	C	C	C	D	D	D	D	D	D	D	D	D	D	D
12	9	13	E	E	E	E	E	E	E	E	E	E	D	D	D	D	D	D	D	D	E	F	F	F	G	G
12	9	14	G	G	G	G	G	G	G	G	E	D	D	C	C	B	B	B	C	D	E	F	F	G	G	G
12	9	15	G	G	G	G	G	G	G	F	D	D	C	B	B	A	A	B	C	D	D	E	E	E	E	F
12	9	16	F	E	F	F	E	E	F	F	E	C	C	D	D	C	B	B	B	D	E	E	E	E	E	E
12	9	17	F	F	F	G	G	F	F	F	F	F	E	E	D	D	D	D	D	D	E	F	G	G	G	F
12	9	18	E	E	E	E	F	F	F	F	D	C	C	C	B	C	C	C	D	D	E	F	E	E	F	E
12	9	19	E	E	E	E	E	E	E	D	D	B	A	A	B	B	B	B	D	E	E	E	E	E	E	E
12	9	20	F	G	G	G	G	G	G	G	E	D	D	B	B	B	B	C	D	D	F	F	F	E	F	F
12	9	21	F	G	G	F	F	G	F	E	D	C	B	A	A	A	A	B	C	D	F	G	G	G	G	G
12	9	22	G	G	F	E	E	E	E	D	C	B	B	B	A	A	B	B	C	D	E	F	G	G	G	G
12	9	23	G	G	G	G	G	G	G	F	D	D	D	C	C	C	B	C	C	D	F	G	G	G	G	G
12	9	24	G	F	F	E	F	G	F	E	D	D	B	B	B	C	C	D	D	D	E	F	E	E	E	F
12	9	25	E	E	E	E	F	E	E	E	D	D	C	C	C	C	D	C	D	E	F	G	G	G	G	G
12	9	26	G	F	F	E	E	E	E	E	D	D	D	C	D	D	D	D	D	E	E	F	F	G	G	G
12	9	27	G	G	G	G	G	G	G	G	D	D	D	C	C	D	D	D	D	D	G	G	G	G	G	G

PROGRAM: JFD VERSION: PC-1.2
NPPD-COOPER NUCLEAR STATION JFD:10M WIND VS 10M DELTA T - JUL-DEC 2012
SITE IDENTIFIER: NPPD
DATA PERIOD EXAMINED: 7/ 1/12 - 12/31/12
STABILITY BASED ON: DELTA T BETWEEN 60.0 AND 10.0 METERS

HOURLY STABILITIES

YR	MN	DY	1	2	3	4	5	6	7	8	9	10	11	12	13	14	15	16	17	18	19	20	21	22	23	24
			HOURS																							
12	9	28	G	G	G	G	G	G	G	G	E	D	D	C	C	B	C	C	D	D	E	F	G	F	G	G
12	9	29	G	G	G	G	G	G	G	G	E	D	D	D	D	C	D	D	C	D	G	G	G	G	G	G
12	9	30	G	G	G	G	G	G	G	G	F	D	D	D	D	C	D	D	D	E	G	G	G	G	G	G
12	10	1	G	G	G	G	G	G	G	G	E	D	C	B	B	B	C	D	D	D	E	E	E	E	E	E
12	10	2	E	F	E	E	F	F	G	G	D	D	D	C	C	C	C	D	D	E	G	G	G	G	G	G
12	10	3	G	G	G	G	G	G	G	G	E	D	A	A	A	A	A	A	C	D	E	E	E	E	E	E
12	10	4	D	D	D	D	D	D	D	D	D	D	D	D	C	B	C	C	D	D	E	E	D	E	E	E
12	10	5	D	D	D	D	D	D	E	E	D	D	D	D	D	D	C	C	D	D	F	G	G	G	G	E
12	10	6	E	E	F	F	F	F	E	E	D	D	C	C	D	C	C	C	D	D	E	E	F	F	F	F
12	10	7	F	F	F	F	F	F	G	D	D	D	B	A	B	B	A	C	D	D	E	E	F	F	E	E
12	10	8	E	E	E	E	E	E	E	E	D	B	A	A	A	A	A	B	D	E	F	E	E	E	E	E
12	10	9	E	D	D	D	E	E	E	E	E	D	D	C	C	C	C	C	D	D	E	G	G	F	F	G
12	10	10	G	G	G	G	G	F	F	E	E	D	D	B	B	B	B	C	D	E	F	F	F	F	F	F
12	10	11	E	E	E	E	F	E	E	E	D	C	B	C	C	B	D	D	D	D	D	D	D	D	D	D
12	10	12	D	D	D	D	D	D	D	D	D	C	C	C	C	D	D	D	D	D	D	D	D	E	D	D
12	10	13	D	E	E	E	F	F	F	F	E	D	D	C	C	D	D	D	D	D	E	E	E	E	F	F
12	10	14	F	E	E	D	E	E	E	D	D	D	D	D	D	D	D	D	D	E	F	G	G	F	F	G
12	10	15	G	G	G	G	G	G	G	G	E	D	C	C	B	C	C	C	D	D	E	E	E	F	F	E
12	10	16	E	F	F	F	F	G	F	E	D	D	D	D	D	D	D	D	D	E	F	F	F	F	F	F
12	10	17	E	E	E	E	D	D	D	D	D	D	D	D	D	C	D	D	D	D	E	E	E	E	E	E
12	10	18	E	E	E	E	E	D	D	D	D	D	D	D	D	D	D	D	D	D	D	D	D	D	D	D
12	10	19	D	D	D	D	D	D	D	D	D	D	D	D	D	D	D	D	D	D	D	D	E	E	F	G
12	10	20	G	F	G	G	F	F	F	G	E	E	D	C	B	B	B	C	D	E	E	F	E	E	E	E
12	10	21	E	E	E	E	E	E	E	E	D	D	C	B	B	B	B	C	D	D	E	D	D	D	E	E
12	10	22	E	E	E	F	E	E	E	E	D	D	B	B	B	B	B	C	D	D	D	D	E	E	E	E
12	10	23	E	E	F	F	F	F	E	E	E	E	D	D	C	B	B	D	D	E	E	E	E	E	E	E
12	10	24	F	F	F	G	F	G	G	G	E	C	C	D	D	C	D	D	D	D	D	D	D	E	E	E
12	10	25	E	E	E	E	E	D	D	D	D	D	D	D	D	C	C	D	D	D	D	D	D	D	D	D
12	10	26	D	E	E	E	E	E	E	E	D	D	C	D	C	C	D	D	D	D	E	F	E	F	G	G
12	10	27	G	G	G	F	G	G	G	G	F	D	C	C	C	C	C	C	D	D	E	E	F	F	F	F
12	10	28	E	E	E	E	F	F	F	F	E	D	C	B	C	C	B	C	C	D	E	E	E	D	D	D
12	10	29	D	D	D	D	D	D	D	D	D	D	D	A	A	A	B	C	D	E	E	E	E	E	E	E
12	10	30	E	E	E	E	E	E	E	E	D	D	D	C	C	B	B	C	D	E	F	F	F	G	G	G
12	10	31	G	G	G	G	G	G	G	G	F	D	D	D	C	D	D	D	E	F	G	G	G	G	G	G
12	11	1	G	G	G	G	G	G	G	G	F	D	C	B	B	B	B	C	D	E	E	E	E	E	E	F
12	11	2	F	E	E	D	E	E	E	D	D	C	B	B	A	C	C	D	D	E	E	F	E	E	E	E
12	11	3	E	E	E	E	E	E	E	E	D	D	C	C	C	C	C	D	D	F	G	G	G	G	G	G
12	11	4	G	G	G	G	G	F	F	F	E	D	C	B	B	C	D	D	D	D	E	E	E	E	E	E
12	11	5	D	D	D	D	D	D	D	D	D	D	D	D	D	D	D	D	D	D	D	D	D	D	D	D
12	11	6	D	D	D	D	D	D	D	E	D	D	D	C	C	C	D	D	D	E	E	E	E	F	F	F
12	11	7	F	F	F	F	F	E	E	E	D	D	C	C	D	D	C	D	D	F	F	F	F	F	F	F
12	11	8	F	F	E	E	E	E	E	E	D	D	C	B	B	B	C	D	E	F	F	G	G	F	E	F
12	11	9	F	E	F	F	E	E	E	F	E	D	C	D	B	B	C	D	D	E	E	E	E	E	E	E
12	11	10	E	E	E	E	E	E	E	E	D	D	D	D	C	A	C	D	D	E	E	E	E	D	E	E
12	11	11	E	D	D	D	D	D	D	D	D	D	D	D	D	D	D	D	D	D	D	D	E	E	E	E

PROGRAM: JFD VERSION: PC-1.2
NPPD-COOPER NUCLEAR STATION JFD:10M WIND VS 10M DELTA T - JUL-DEC 2012
SITE IDENTIFIER: NPPD
DATA PERIOD EXAMINED: 7/ 1/12 - 12/31/12
STABILITY BASED ON: DELTA T BETWEEN 60.0 AND 10.0 METERS

HOURLY STABILITIES

YR	MN	DY	1	2	3	4	5	6	7	8	9	10	11	12	13	14	15	16	17	18	19	20	21	22	23	24
			HOURS																							
12	11	12	E	E	E	E	E	E	E	E	D	D	D	D	D	D	D	D	D	F	G	G	G	G	G	G
12	11	13	G	G	G	F	F	F	F	F	E	D	D	D	D	D	D	D	E	E	E	F	F	F	F	E
12	11	14	E	F	F	F	F	F	F	F	E	D	D	D	D	D	D	D	E	F	F	F	E	E	E	E
12	11	15	E	E	E	E	E	E	E	E	E	D	D	D	D	D	D	D	E	F	G	G	G	G	G	G
12	11	16	F	E	E	E	E	E	F	F	E	D	D	D	C	B	C	D	D	E	F	F	G	F	G	F
12	11	17	F	E	E	E	F	F	F	F	E	D	D	C	C	B	D	D	E	E	E	E	E	E	E	E
12	11	18	E	E	E	E	E	E	E	E	D	D	C	C	C	B	D	D	D	D	E	D	E	E	E	E
12	11	19	E	E	E	E	E	E	E	E	D	D	C	C	B	D	D	D	E	E	F	G	F	G	F	E
12	11	20	F	F	E	E	G	E	E	E	D	D	D	D	D	D	D	D	E	F	G	G	G	G	G	F
12	11	21	F	G	F	F	G	F	G	G	G	E	D	C	D	C	D	D	E	E	F	F	E	E	E	E
12	11	22	E	F	F	E	E	F	E	E	E	E	D	D	E	G	D	D	D	D	E	F	E	E	E	E
12	11	23	E	D	D	D	D	D	D	D	D	C	C	C	C	C	C	D	D	E	E	E	F	F	F	G
12	11	24	G	G	G	F	F	F	F	F	D	D	C	C	C	B	C	D	E	E	E	E	E	E	E	E
12	11	25	F	G	G	G	F	E	E	E	D	D	D	C	C	D	C	C	D	E	E	E	E	F	E	E
12	11	26	E	E	E	E	E	D	D	D	D	D	D	D	C	C	D	D	D	E	E	E	E	E	F	G
12	11	27	G	G	G	G	G	G	F	F	E	D	C	B	B	B	C	D	D	E	F	G	G	F	E	E
12	11	28	E	F	G	G	G	G	G	G	F	D	D	C	C	B	D	D	E	F	F	F	E	E	E	E
12	11	29	F	E	F	F	F	E	E	F	F	D	D	C	C	C	D	D	E	F	G	G	G	G	G	G
12	11	30	G	G	G	F	F	E	E	E	D	D	D	D	D	D	D	D	D	F	G	G	G	F	F	F
12	12	1	F	E	F	F	F	E	E	E	E	E	E	D	D	D	D	D	E	F	G	G	G	F	F	G
12	12	2	G	G	G	G	G	F	F	G	G	E	D	D	D	D	D	D	E	E	E	E	F	E	E	E
12	12	3	F	E	F	F	G	E	E	E	E	D	D	D	D	D	D	D	D	E	E	F	F	F	F	F
12	12	4	F	F	G	G	G	G	G	G	G	E	D	D	D	D	D	D	E	G	G	G	G	G	G	G
12	12	5	G	G	G	F	F	E	E	E	E	D	D	D	C	C	D	D	E	E	E	E	E	E	E	E
12	12	6	E	E	E	E	E	E	E	E	E	D	D	D	D	D	D	D	D	E	E	D	D	D	E	E
12	12	7	D	D	D	D	E	E	E	E	E	D	C	C	C	D	D	D	D	D	E	E	E	E	E	E
12	12	8	E	F	F	E	E	E	E	E	D	D	D	D	D	D	D	D	D	D	D	D	D	D	D	D
12	12	9	D	D	D	D	D	D	D	E	D	D	D	D	D	D	D	D	D	D	D	D	D	D	D	D
12	12	10	D	D	D	D	D	D	D	D	D	D	D	C	C	C	D	D	E	E	E	E	E	F	E	E
12	12	11	E	E	E	E	F	F	E	E	E	D	D	D	C	D	D	D	E	E	F	E	E	E	E	F
12	12	12	F	F	F	F	F	F	E	F	E	D	D	C	B	B	C	D	E	E	E	E	E	E	E	E
12	12	13	E	E	E	E	F	E	F	F	E	E	D	D	C	D	D	D	E	G	G	G	G	G	G	G
12	12	14	G	G	G	G	G	G	G	G	G	D	D	D	D	D	D	D	D	D	D	D	D	D	D	D
12	12	15	D	D	D	D	D	D	D	E	E	D	D	D	D	D	D	D	D	D	D	D	D	D	D	E
12	12	16	E	D	D	D	D	D	D	D	D	D	D	D	D	D	D	D	D	D	D	D	E	E	E	E
12	12	17	E	F	E	E	E	F	E	E	D	D	-	-	-	C	D	D	D	E	E	F	E	E	E	E
12	12	18	E	F	F	G	F	E	E	F	E	D	D	D	D	D	D	D	E	F	G	G	G	G	G	G
12	12	19	G	G	F	E	E	E	E	E	E	D	D	D	D	D	D	D	D	D	D	D	D	D	D	D
12	12	20	D	D	D	D	D	D	D	D	D	D	D	D	D	D	D	D	D	D	D	E	E	E	E	E
12	12	21	E	E	F	F	F	G	G	G	G	E	E	D	D	D	D	D	D	E	F	E	F	G	F	F
12	12	22	E	F	F	G	F	F	F	G	F	E	D	D	D	D	D	D	E	G	G	E	E	D	D	D
12	12	23	D	D	D	D	D	D	D	D	D	D	D	D	D	D	D	D	D	D	D	D	D	D	D	D
12	12	24	D	D	D	D	D	D	D	D	D	D	D	C	C	D	D	D	D	D	D	D	D	D	D	D
12	12	25	D	D	D	D	D	D	D	D	D	D	C	A	A	B	C	D	D	D	D	D	D	D	D	D
12	12	26	D	D	D	D	D	D	D	D	D	D	D	D	D	D	D	D	D	E	E	D	E	E	E	E

PROGRAM: JFD VERSION: PC-1.2
NPPD-COOPER NUCLEAR STATION JFD:10M WIND VS 10M DELTA T - JUL-DEC 2012
SITE IDENTIFIER: NPPD
DATA PERIOD EXAMINED: 7/ 1/12 - 12/31/12
STABILITY BASED ON: DELTA T BETWEEN 60.0 AND 10.0 METERS

HOURLY STABILITIES

YR	MN	DY	1	2	3	4	5	6	7	8	9	10	11	12	13	14	15	16	17	18	19	20	21	22	23	24
			HOURS																							
12	12	27	E	E	E	E	E	E	D	D	D	D	D	D	D	D	D	D	D	D	D	D	D	D	D	D
12	12	28	D	D	D	D	D	D	D	D	D	D	D	D	D	D	D	D	D	D	D	D	D	D	D	D
12	12	29	D	D	D	D	D	D	D	E	D	D	D	D	D	D	D	D	D	E	F	F	G	G	G	G
12	12	30	G	G	G	G	G	G	G	G	G	F	D	D	D	D	D	D	E	E	E	E	D	D	E	E
12	12	31	D	D	D	D	D	D	D	D	D	D	D	D	D	D	D	D	D	D	D	D	D	D	E	D

JFDs of 10-Meter Wind vs. Delta T

January-December 2012

PROGRAM: JFD VERSION: PC-1.2
NPPD-COOPER NUCLEAR STATION JFD:10M WIND VS 10M DELTA T - JAN-DEC 2012
SITE IDENTIFIER: NPPD
DATA PERIOD EXAMINED: 1/ 1/12 -12/31/12

*** JAN-DEC 2012 ***

STABILITY CLASS A

STABILITY BASED ON: DELTA T BETWEEN 60.0 AND 10.0 METERS
WIND MEASURED AT: 10.0 METERS
WIND THRESHOLD AT: 1.00 MPH
JOINT FREQUENCY DISTRIBUTION OF WIND SPEED AND DIRECTION IN HOURS AT 10.00 METERS

SPEED (MPH)	N	NNE	NE	ENE	E	ESE	SE	SSE	S	SSW	SW	WSW	W	WNW	NW	NNW	TOTAL
CALM																	0
1.01- 3.50	0	0	0	0	0	0	0	0	0	0	0	0	0	0	0	0	0
3.51- 7.50	1	1	7	3	8	5	10	6	5	4	0	2	0	1	0	0	53
7.51-12.50	22	2	1	2	3	10	51	61	83	40	4	2	2	6	1	2	292
12.51-18.50	7	0	1	0	0	0	24	36	107	23	5	3	3	9	5	16	239
18.51-24.00	1	0	0	0	0	0	0	7	40	3	4	1	0	0	8	4	68
>24.00	0	0	0	0	0	0	0	1	3	0	0	0	0	0	0	0	4
TOTAL	31	3	9	5	11	15	85	111	238	70	13	8	5	16	14	22	656

STABILITY CLASS B

STABILITY BASED ON: DELTA T BETWEEN 60.0 AND 10.0 METERS
WIND MEASURED AT: 10.0 METERS
WIND THRESHOLD AT: 1.00 MPH
JOINT FREQUENCY DISTRIBUTION OF WIND SPEED AND DIRECTION IN HOURS AT 10.00 METERS

SPEED (MPH)	N	NNE	NE	ENE	E	ESE	SE	SSE	S	SSW	SW	WSW	W	WNW	NW	NNW	TOTAL
CALM																	0
1.01- 3.50	0	0	0	1	0	0	0	0	0	0	0	1	0	0	0	0	2
3.51- 7.50	8	12	15	8	5	16	16	16	13	8	6	4	2	4	0	8	141
7.51-12.50	43	13	7	8	14	16	31	16	30	41	8	8	7	14	10	16	282
12.51-18.50	16	3	2	2	1	1	5	9	24	13	2	6	3	11	10	19	127
18.51-24.00	0	0	0	0	0	0	0	0	11	3	1	1	0	1	4	0	21
>24.00	0	0	0	0	0	0	0	0	3	0	0	0	1	0	0	0	4
TOTAL	67	28	24	19	20	33	52	41	81	65	17	20	13	30	24	43	577

PROGRAM: JFD VERSION: PC-1.2
NPPD-COOPER NUCLEAR STATION JFD:10M WIND VS 10M DELTA T - JAN-DEC 2012
SITE IDENTIFIER: NPPD
DATA PERIOD EXAMINED: 1/ 1/12 - 12/31/12

*** JAN-DEC 2012 ***

STABILITY CLASS C

STABILITY BASED ON: DELTA T BETWEEN 60.0 AND 10.0 METERS
WIND MEASURED AT: 10.0 METERS
WIND THRESHOLD AT: 1.00 MPH
JOINT FREQUENCY DISTRIBUTION OF WIND SPEED AND DIRECTION IN HOURS AT 10.00 METERS

SPEED (MPH)	N	NNE	NE	ENE	E	ESE	SE	SSE	S	SSW	SW	WSW	W	WNW	NW	NNW	TOTAL
CALM																	0
1.01- 3.50	0	1	2	3	0	1	3	4	0	0	0	0	0	1	0	0	15
3.51- 7.50	28	25	17	14	8	18	31	18	20	12	7	6	4	7	3	5	223
7.51-12.50	46	16	6	13	7	15	23	14	22	27	11	10	4	12	11	28	265
12.51-18.50	18	2	1	1	0	2	5	17	18	14	7	2	4	3	20	28	142
18.51-24.00	0	0	0	0	0	3	0	1	9	5	1	0	1	2	8	4	34
>24.00	0	0	0	0	0	0	0	0	2	1	0	0	3	0	1	2	9
TOTAL	92	44	26	31	15	39	62	54	71	59	26	18	16	25	43	67	688

STABILITY CLASS D

STABILITY BASED ON: DELTA T BETWEEN 60.0 AND 10.0 METERS
WIND MEASURED AT: 10.0 METERS
WIND THRESHOLD AT: 1.00 MPH
JOINT FREQUENCY DISTRIBUTION OF WIND SPEED AND DIRECTION IN HOURS AT 10.00 METERS

SPEED (MPH)	N	NNE	NE	ENE	E	ESE	SE	SSE	S	SSW	SW	WSW	W	WNW	NW	NNW	TOTAL
CALM																	1
1.01- 3.50	8	3	16	14	14	9	12	6	11	6	4	6	5	3	2	5	124
3.51- 7.50	83	71	49	48	33	69	104	47	53	30	25	30	21	25	45	55	788
7.51-12.50	172	67	25	33	40	48	111	96	102	58	46	20	20	52	92	116	1098
12.51-18.50	72	24	9	7	11	9	49	99	90	32	19	17	14	40	107	139	738
18.51-24.00	6	0	0	1	0	2	1	7	12	4	0	7	9	17	64	32	162
>24.00	6	0	0	0	0	0	0	0	9	5	2	0	6	7	11	5	51
TOTAL	347	165	99	103	98	137	277	255	277	135	96	80	75	144	321	352	2962

PROGRAM: JFD VERSION: PC-1.2
NPPD-COOPER NUCLEAR STATION JFD:10M WIND VS 10M DELTA T - JAN-DEC 2012
SITE IDENTIFIER: NPPD
DATA PERIOD EXAMINED: 1/ 1/12 -12/31/12

*** JAN-DEC 2012 ***

STABILITY CLASS E

STABILITY BASED ON: DELTA T BETWEEN 60.0 AND 10.0 METERS
WIND MEASURED AT: 10.0 METERS
WIND THRESHOLD AT: 1.00 MPH
JOINT FREQUENCY DISTRIBUTION OF WIND SPEED AND DIRECTION IN HOURS AT 10.00 METERS

SPEED (MPH)	N	NNE	NE	ENE	E	ESE	SE	SSE	S	SSW	SW	WSW	W	WNW	NW	NNW	TOTAL
CALM																	0
1.01- 3.50	27	11	11	5	12	10	20	30	60	28	18	14	13	17	26	20	322
3.51- 7.50	169	33	28	27	24	37	89	106	175	67	21	14	23	29	41	81	964
7.51-12.50	64	15	3	0	3	1	43	93	151	52	40	20	16	31	47	49	628
12.51-18.50	5	3	1	0	1	0	6	30	28	14	8	1	11	5	10	11	134
18.51-24.00	1	0	0	0	0	0	0	1	9	2	0	0	0	0	1	0	14
>24.00	0	0	0	0	0	0	0	1	7	0	0	0	0	0	1	1	10
TOTAL	266	62	43	32	40	48	158	261	430	163	87	49	63	82	126	162	2072

STABILITY CLASS F

STABILITY BASED ON: DELTA T BETWEEN 60.0 AND 10.0 METERS
WIND MEASURED AT: 10.0 METERS
WIND THRESHOLD AT: 1.00 MPH
JOINT FREQUENCY DISTRIBUTION OF WIND SPEED AND DIRECTION IN HOURS AT 10.00 METERS

SPEED (MPH)	N	NNE	NE	ENE	E	ESE	SE	SSE	S	SSW	SW	WSW	W	WNW	NW	NNW	TOTAL
CALM																	6
1.01- 3.50	33	14	5	7	9	6	17	60	97	67	41	22	17	27	46	43	511
3.51- 7.50	30	8	2	1	0	1	7	27	138	59	6	5	9	8	36	31	368
7.51-12.50	8	0	0	0	0	1	1	1	18	19	9	7	7	7	9	7	94
12.51-18.50	7	0	0	1	0	0	0	0	2	0	2	2	1	0	0	1	16
18.51-24.00	0	0	0	0	0	0	0	0	0	0	0	0	0	0	0	0	0
>24.00	0	0	0	0	0	0	0	0	0	0	0	0	0	0	0	0	0
TOTAL	78	22	7	9	9	8	25	88	255	145	58	36	34	42	91	82	995

PROGRAM: JFD VERSION: PC-1.2
NPPD-COOPER NUCLEAR STATION JFD:10M WIND VS 10M DELTA T - JAN-DEC 2012
SITE IDENTIFIER: NPPD
DATA PERIOD EXAMINED: 1/ 1/12 -12/31/12

*** JAN-DEC 2012 ***

STABILITY CLASS G

STABILITY BASED ON: DELTA T BETWEEN 60.0 AND 10.0 METERS
WIND MEASURED AT: 10.0 METERS
WIND THRESHOLD AT: 1.00 MPH
JOINT FREQUENCY DISTRIBUTION OF WIND SPEED AND DIRECTION IN HOURS AT 10.00 METERS

SPEED (MPH)	N	NNE	NE	ENE	E	ESE	SE	SSE	S	SSW	SW	WSW	W	WNW	NW	NNW	TOTAL
CALM																	32
1.01- 3.50	51	19	9	6	5	13	26	116	154	68	35	30	25	32	50	73	712
3.51- 7.50	3	3	1	0	0	0	0	10	26	11	0	1	3	2	7	4	71
7.51-12.50	0	0	0	0	0	0	0	0	1	1	1	1	2	1	0	0	7
12.51-18.50	5	0	0	0	0	0	0	0	1	0	0	0	0	0	0	2	8
18.51-24.00	0	0	0	0	0	0	0	0	0	0	0	0	0	0	1	0	1
>24.00	0	0	0	0	0	0	0	0	0	0	0	0	0	0	0	0	0
TOTAL	59	22	10	6	5	13	26	126	182	80	36	32	30	35	58	79	831

STABILITY CLASS ALL

STABILITY BASED ON: DELTA T BETWEEN 60.0 AND 10.0 METERS
WIND MEASURED AT: 10.0 METERS
WIND THRESHOLD AT: 1.00 MPH
JOINT FREQUENCY DISTRIBUTION OF WIND SPEED AND DIRECTION IN HOURS AT 10.00 METERS

SPEED (MPH)	N	NNE	NE	ENE	E	ESE	SE	SSE	S	SSW	SW	WSW	W	WNW	NW	NNW	TOTAL
CALM																	39
1.01- 3.50	119	48	43	36	40	39	78	216	322	169	98	73	60	80	124	141	1686
3.51- 7.50	322	153	119	101	78	146	257	230	430	191	65	62	62	76	132	184	2608
7.51-12.50	355	113	42	56	67	91	260	281	407	238	119	68	58	123	170	218	2666
12.51-18.50	130	32	14	11	13	12	89	191	270	96	43	31	36	68	152	216	1404
18.51-24.00	8	0	0	1	0	5	1	16	81	17	6	9	10	20	86	40	300
>24.00	6	0	0	0	0	0	0	2	24	6	2	0	10	7	13	8	78
TOTAL	940	346	218	205	198	293	685	936	1534	717	333	243	236	374	677	807	8781

PROGRAM: JFD VERSION: PC-1.2
NPPD-COOPER NUCLEAR STATION JFD:10M WIND VS 10M DELTA T - JAN-DEC 2012
SITE IDENTIFIER: NPPD
DATA PERIOD EXAMINED: 1/ 1/12 - 12/31/12

*** JAN-DEC 2012 ***

STABILITY BASED ON: DELTA T BETWEEN 60.0 AND 10.0 METERS
WIND MEASURED AT: 10.0 METERS
WIND THRESHOLD AT: 1.00 MPH

TOTAL NUMBER OF OBSERVATIONS: 8784

TOTAL NUMBER OF VALID OBSERVATIONS: 8781

TOTAL NUMBER OF MISSING OBSERVATIONS: 3

PERCENT DATA RECOVERY FOR THIS PERIOD: 100.0 %

MEAN WIND SPEED FOR THIS PERIOD: 8.4 MPH

TOTAL NUMBER OF OBSERVATIONS WITH BACKUP DATA: 0

PERCENTAGE OCCURRENCE OF STABILITY CLASSES

A	B	C	D	E	F	G
7.47	6.57	7.84	33.73	23.60	11.33	9.46

DISTRIBUTION OF WIND DIRECTION VS STABILITY

	N	NNE	NE	ENE	E	ESE	SE	SSE	S	SSW	SW	WSW	W	WNW	NW	NNW	CALM
A	31	3	9	5	11	15	85	111	238	70	13	8	5	16	14	22	0
B	67	28	24	19	20	33	52	41	81	65	17	20	13	30	24	43	0
C	92	44	26	31	15	39	62	54	71	59	26	18	16	25	43	67	0
D	347	165	99	103	98	137	277	255	277	135	96	80	75	144	321	352	1
E	266	62	43	32	40	48	158	261	430	163	87	49	63	82	126	162	0
F	78	22	7	9	9	8	25	88	255	145	58	36	34	42	91	82	6
G	59	22	10	6	5	13	26	126	182	80	36	32	30	35	58	79	32
TOTAL	940	346	218	205	198	293	685	936	1534	717	333	243	236	374	677	807	39

JFDs of 100-Meter Wind vs. Delta T

January-March 2012

PROGRAM: JFD VERSION: PC-1.2
NPPD-COOPER NUCLEAR STATION JFD:100M WIND VS 10M DELTA T JAN-MAR 2012
SITE IDENTIFIER: NPPD
DATA PERIOD EXAMINED: 1/ 1/12 - 3/31/12

*** JAN-MAR 2012 ***

STABILITY CLASS A

STABILITY BASED ON: DELTA T BETWEEN 100.0 AND 10.0 METERS
WIND MEASURED AT: 100.0 METERS
WIND THRESHOLD AT: 1.00 MPH
JOINT FREQUENCY DISTRIBUTION OF WIND SPEED AND DIRECTION IN HOURS AT 100.00 METERS

SPEED (MPH)	N	NNE	NE	ENE	E	ESE	SE	SSE	S	SSW	SW	WSW	W	WNW	NW	NNW	TOTAL
CALM																	0
1.01- 3.50	0	0	0	0	0	0	0	0	0	0	0	0	0	0	0	0	0
3.51- 7.50	0	0	0	0	0	0	0	0	0	0	0	0	0	0	0	0	0
7.51-12.50	0	0	0	0	0	0	0	0	0	0	0	1	0	0	0	0	1
12.51-18.50	0	0	0	0	0	0	0	0	0	0	0	0	0	0	0	0	0
18.51-24.00	0	0	0	0	0	0	0	0	0	1	0	0	0	0	0	0	1
>24.00	0	0	0	0	0	0	0	0	3	0	0	0	0	0	0	0	3
TOTAL	0	0	0	0	0	0	0	0	3	1	0	1	0	0	0	0	5

STABILITY CLASS B

STABILITY BASED ON: DELTA T BETWEEN 100.0 AND 10.0 METERS
WIND MEASURED AT: 100.0 METERS
WIND THRESHOLD AT: 1.00 MPH
JOINT FREQUENCY DISTRIBUTION OF WIND SPEED AND DIRECTION IN HOURS AT 100.00 METERS

SPEED (MPH)	N	NNE	NE	ENE	E	ESE	SE	SSE	S	SSW	SW	WSW	W	WNW	NW	NNW	TOTAL
CALM																	0
1.01- 3.50	0	0	0	0	0	0	0	0	0	0	0	0	0	0	0	0	0
3.51- 7.50	0	0	0	0	0	0	0	0	0	0	0	1	0	0	0	0	1
7.51-12.50	0	0	0	0	0	0	0	0	0	1	0	1	0	0	0	0	2
12.51-18.50	0	0	0	0	0	0	0	1	5	2	0	0	0	0	0	0	8
18.51-24.00	0	0	0	0	0	0	0	0	1	1	2	0	0	0	0	0	4
>24.00	0	0	0	0	0	0	0	1	4	0	0	0	0	0	0	0	5
TOTAL	0	0	0	0	0	0	0	2	10	4	2	2	0	0	0	0	20

PROGRAM: JFD VERSION: PC-1.2
NPPD-COOPER NUCLEAR STATION JFD:100M WIND VS 10M DELTA T JAN-MAR 2012
SITE IDENTIFIER: NPPD
DATA PERIOD EXAMINED: 1/ 1/12 - 3/31/12

*** JAN-MAR 2012 ***

STABILITY CLASS C

STABILITY BASED ON: DELTA T BETWEEN 100.0 AND 10.0 METERS
WIND MEASURED AT: 100.0 METERS
WIND THRESHOLD AT: 1.00 MPH
JOINT FREQUENCY DISTRIBUTION OF WIND SPEED AND DIRECTION IN HOURS AT 100.00 METERS

SPEED (MPH)	N	NNE	NE	ENE	E	ESE	SE	SSE	S	SSW	SW	WSW	W	WNW	NW	NNW	TOTAL
CALM																	0
1.01- 3.50	0	0	0	0	0	0	0	0	0	0	0	0	0	0	0	0	0
3.51- 7.50	0	0	0	0	1	0	0	0	1	0	0	0	0	0	0	0	2
7.51-12.50	0	1	0	0	0	1	0	2	3	4	0	0	1	0	0	0	12
12.51-18.50	1	0	0	0	0	0	3	3	1	2	3	2	1	0	0	1	17
18.51-24.00	0	0	0	0	0	0	1	2	1	5	2	3	0	0	0	2	16
>24.00	0	0	0	0	0	0	0	0	10	0	1	0	0	0	0	3	14
TOTAL	1	1	0	0	1	1	4	7	16	11	6	5	2	0	0	6	61

STABILITY CLASS D

STABILITY BASED ON: DELTA T BETWEEN 100.0 AND 10.0 METERS
WIND MEASURED AT: 100.0 METERS
WIND THRESHOLD AT: 1.00 MPH
JOINT FREQUENCY DISTRIBUTION OF WIND SPEED AND DIRECTION IN HOURS AT 100.00 METERS

SPEED (MPH)	N	NNE	NE	ENE	E	ESE	SE	SSE	S	SSW	SW	WSW	W	WNW	NW	NNW	TOTAL
CALM																	0
1.01- 3.50	0	1	0	1	1	2	2	0	0	0	3	0	0	0	1	1	12
3.51- 7.50	17	7	3	2	7	5	8	6	8	10	5	6	4	4	6	11	109
7.51-12.50	25	9	7	4	10	29	23	10	19	22	14	6	7	20	31	11	247
12.51-18.50	45	5	0	0	9	15	14	11	22	13	23	11	15	9	36	35	263
18.51-24.00	23	4	1	1	10	4	13	20	37	7	4	5	6	22	48	37	242
>24.00	1	0	1	1	12	0	8	29	35	4	0	8	12	10	50	37	208
TOTAL	111	26	12	9	49	55	68	76	121	56	49	36	44	65	172	132	1081

PROGRAM: JFD VERSION: PC-1.2
NPPD-COOPER NUCLEAR STATION JFD:100M WIND VS 10M DELTA T JAN-MAR 2012
SITE IDENTIFIER: NPPD
DATA PERIOD EXAMINED: 1/ 1/12 - 3/31/12

*** JAN-MAR 2012 ***

STABILITY CLASS E

STABILITY BASED ON: DELTA T BETWEEN 100.0 AND 10.0 METERS
WIND MEASURED AT: 100.0 METERS
WIND THRESHOLD AT: 1.00 MPH
JOINT FREQUENCY DISTRIBUTION OF WIND SPEED AND DIRECTION IN HOURS AT 100.00 METERS

SPEED (MPH)	N	NNE	NE	ENE	E	ESE	SE	SSE	S	SSW	SW	WSW	W	WNW	NW	NNW	TOTAL
CALM																	0
1.01- 3.50	1	1	0	1	0	1	0	0	1	1	2	1	1	0	1	0	11
3.51- 7.50	6	4	3	3	1	2	1	2	3	2	3	2	3	2	3	2	42
7.51-12.50	13	9	8	0	4	7	12	6	9	16	2	3	5	7	17	9	127
12.51-18.50	2	4	1	1	2	10	20	19	37	29	13	6	6	12	35	16	213
18.51-24.00	5	0	2	0	1	7	10	15	32	6	20	6	12	14	20	1	151
>24.00	0	0	4	0	0	0	13	11	9	1	8	4	7	6	8	0	71
TOTAL	27	18	18	5	8	27	56	53	91	55	48	22	34	41	84	28	615

STABILITY CLASS F

STABILITY BASED ON: DELTA T BETWEEN 100.0 AND 10.0 METERS
WIND MEASURED AT: 100.0 METERS
WIND THRESHOLD AT: 1.00 MPH
JOINT FREQUENCY DISTRIBUTION OF WIND SPEED AND DIRECTION IN HOURS AT 100.00 METERS

SPEED (MPH)	N	NNE	NE	ENE	E	ESE	SE	SSE	S	SSW	SW	WSW	W	WNW	NW	NNW	TOTAL
CALM																	0
1.01- 3.50	0	0	1	1	0	0	1	2	0	1	1	1	1	3	1	0	13
3.51- 7.50	3	4	3	8	3	3	1	5	5	4	2	2	5	2	1	0	51
7.51-12.50	1	3	2	0	1	3	11	12	10	19	7	5	5	7	4	3	93
12.51-18.50	1	0	0	0	0	0	2	6	3	15	8	4	3	5	6	7	60
18.51-24.00	0	3	0	0	0	0	0	1	5	0	8	3	7	3	2	1	33
>24.00	0	0	0	0	0	0	0	0	0	0	1	5	4	3	0	0	13
TOTAL	5	10	6	9	4	6	15	26	23	39	27	20	25	23	14	11	263

PROGRAM: JFD VERSION: PC-1.2
NPPD-COOPER NUCLEAR STATION JFD:100M WIND VS 10M DELTA T JAN-MAR 2012
SITE IDENTIFIER: NPPD
DATA PERIOD EXAMINED: 1/ 1/12 - 3/31/12

*** JAN-MAR 2012 ***

STABILITY CLASS G

STABILITY BASED ON: DELTA T BETWEEN 100.0 AND 10.0 METERS
WIND MEASURED AT: 100.0 METERS
WIND THRESHOLD AT: 1.00 MPH
JOINT FREQUENCY DISTRIBUTION OF WIND SPEED AND DIRECTION IN HOURS AT 100.00 METERS

SPEED (MPH)	N	NNE	NE	ENE	E	ESE	SE	SSE	S	SSW	SW	WSW	W	WNW	NW	NNW	TOTAL
CALM																	0
1.01- 3.50	0	1	0	1	1	0	0	2	0	1	0	1	0	0	1	1	9
3.51- 7.50	1	0	1	4	1	2	0	3	2	5	6	2	1	3	3	2	36
7.51-12.50	1	2	0	0	1	1	0	0	3	9	7	9	5	6	2	1	47
12.51-18.50	0	0	0	0	0	0	2	1	2	0	9	2	3	1	0	1	21
18.51-24.00	7	3	0	0	0	0	0	0	1	0	0	5	0	0	1	3	20
>24.00	5	0	0	0	0	0	0	0	0	0	1	0	0	0	0	0	6
TOTAL	14	6	1	5	3	3	2	6	8	15	23	19	9	10	7	8	139

STABILITY CLASS ALL

STABILITY BASED ON: DELTA T BETWEEN 100.0 AND 10.0 METERS
WIND MEASURED AT: 100.0 METERS
WIND THRESHOLD AT: 1.00 MPH
JOINT FREQUENCY DISTRIBUTION OF WIND SPEED AND DIRECTION IN HOURS AT 100.00 METERS

SPEED (MPH)	N	NNE	NE	ENE	E	ESE	SE	SSE	S	SSW	SW	WSW	W	WNW	NW	NNW	TOTAL
CALM																	0
1.01- 3.50	1	3	1	4	2	3	3	4	1	3	6	3	2	3	4	2	45
3.51- 7.50	27	15	10	17	13	12	10	16	19	21	16	13	13	11	13	15	241
7.51-12.50	40	24	17	4	16	41	46	30	44	71	30	25	23	40	54	24	529
12.51-18.50	49	9	1	1	11	25	41	41	70	61	56	25	28	27	77	60	582
18.51-24.00	35	10	3	1	11	11	24	38	77	20	36	22	25	39	71	44	467
>24.00	6	0	5	1	12	0	21	41	61	5	11	17	23	19	58	40	320
TOTAL	158	61	37	28	65	92	145	170	272	181	155	105	114	139	277	185	2184

NPPD-COOPER NUCLEAR STATION JFD:100M WIND VS 10M DELTA T JAN-MAR 2012
SITE IDENTIFIER: NPPD
DATA PERIOD EXAMINED: 1/ 1/12 - 3/31/12

*** JAN-MAR 2012 ***

STABILITY BASED ON: DELTA T BETWEEN 100.0 AND 10.0 METERS
WIND MEASURED AT: 100.0 METERS
WIND THRESHOLD AT: 1.00 MPH

TOTAL NUMBER OF OBSERVATIONS: 2184

TOTAL NUMBER OF VALID OBSERVATIONS: 2184

TOTAL NUMBER OF MISSING OBSERVATIONS: 0

PERCENT DATA RECOVERY FOR THIS PERIOD: 100.0 %

MEAN WIND SPEED FOR THIS PERIOD: 15.9 MPH

TOTAL NUMBER OF OBSERVATIONS WITH BACKUP DATA: 0

PERCENTAGE OCCURRENCE OF STABILITY CLASSES

A	B	C	D	E	F	G
.23	.92	2.79	49.50	28.16	12.04	6.36

DISTRIBUTION OF WIND DIRECTION VS STABILITY

	N	NNE	NE	ENE	E	ESE	SE	SSE	S	SSW	SW	WSW	W	WNW	NW	NNW	CALM
A	0	0	0	0	0	0	0	0	3	1	0	1	0	0	0	0	0
B	0	0	0	0	0	0	0	2	10	4	2	2	0	0	0	0	0
C	1	1	0	0	1	1	4	7	16	11	6	5	2	0	0	6	0
D	111	26	12	9	49	55	68	76	121	56	49	36	44	65	172	132	0
E	27	18	18	5	8	27	56	53	91	55	48	22	34	41	84	28	0
F	5	10	6	9	4	6	15	26	23	39	27	20	25	23	14	11	0
G	14	6	1	5	3	3	2	6	8	15	23	19	9	10	7	8	0
TOTAL	158	61	37	28	65	92	145	170	272	181	155	105	114	139	277	185	0

JFDs of 100-Meter Wind vs. Delta T

April-June 2012

PROGRAM: JFD VERSION: PC-1.2
NPPD-COOPER NUCLEAR STATION JFD:100M WIND VS 10M DELTA T APR-JUN 2012
SITE IDENTIFIER: NPPD
DATA PERIOD EXAMINED: 4/ 1/12 - 6/30/12

*** APR-JUN 2012 ***

STABILITY CLASS A

STABILITY BASED ON: DELTA T BETWEEN 100.0 AND 10.0 METERS
WIND MEASURED AT: 100.0 METERS
WIND THRESHOLD AT: 1.00 MPH
JOINT FREQUENCY DISTRIBUTION OF WIND SPEED AND DIRECTION IN HOURS AT 100.00 METERS

SPEED (MPH)	N	NNE	NE	ENE	E	ESE	SE	SSE	S	SSW	SW	WSW	W	WNW	NW	NNW	TOTAL
CALM																	0
1.01- 3.50	0	0	0	0	0	0	0	0	0	0	0	0	0	0	0	0	0
3.51- 7.50	0	0	0	0	0	0	0	0	0	0	0	0	0	0	0	0	0
7.51-12.50	0	0	0	0	0	0	0	1	0	0	0	0	0	0	0	0	1
12.51-18.50	0	0	0	0	0	0	1	1	4	0	0	0	0	0	0	0	6
18.51-24.00	0	0	0	0	0	0	2	2	17	2	0	0	0	0	0	0	23
>24.00	0	0	0	0	0	0	0	1	9	0	0	0	0	0	0	0	10
TOTAL	0	0	0	0	0	0	3	5	30	2	0	0	0	0	0	0	40

STABILITY CLASS B

STABILITY BASED ON: DELTA T BETWEEN 100.0 AND 10.0 METERS
WIND MEASURED AT: 100.0 METERS
WIND THRESHOLD AT: 1.00 MPH
JOINT FREQUENCY DISTRIBUTION OF WIND SPEED AND DIRECTION IN HOURS AT 100.00 METERS

SPEED (MPH)	N	NNE	NE	ENE	E	ESE	SE	SSE	S	SSW	SW	WSW	W	WNW	NW	NNW	TOTAL
CALM																	0
1.01- 3.50	0	0	0	0	0	0	0	0	0	0	0	0	0	0	0	0	0
3.51- 7.50	0	0	0	0	0	0	0	0	0	0	0	0	0	0	0	0	0
7.51-12.50	0	0	0	0	0	0	4	6	0	1	0	0	0	0	0	0	11
12.51-18.50	0	0	0	0	0	0	5	7	7	3	0	0	0	0	0	0	22
18.51-24.00	0	0	0	0	0	0	2	7	13	1	0	0	0	0	0	0	23
>24.00	0	0	0	0	0	0	0	4	26	0	0	0	0	0	0	0	30
TOTAL	0	0	0	0	0	0	11	24	46	5	0	0	0	0	0	0	86

PROGRAM: JFD VERSION: PC-1.2
NPPD-COOPER NUCLEAR STATION JFD:100M WIND VS 10M DELTA T APR-JUN 2012
SITE IDENTIFIER: NPPD
DATA PERIOD EXAMINED: 4/ 1/12 - 6/30/12

*** APR-JUN 2012 ***

STABILITY CLASS C

STABILITY BASED ON: DELTA T BETWEEN 100.0 AND 10.0 METERS
WIND MEASURED AT: 100.0 METERS
WIND THRESHOLD AT: 1.00 MPH
JOINT FREQUENCY DISTRIBUTION OF WIND SPEED AND DIRECTION IN HOURS AT 100.00 METERS

SPEED (MPH)	N	NNE	NE	ENE	E	ESE	SE	SSE	S	SSW	SW	WSW	W	WNW	NW	NNW	TOTAL
CALM																	0
1.01- 3.50	0	0	0	0	0	0	0	0	0	0	0	0	0	0	0	0	0
3.51- 7.50	1	1	1	0	0	1	1	0	0	1	0	0	0	0	0	0	6
7.51-12.50	1	1	0	2	3	2	10	4	3	7	3	1	0	0	0	1	38
12.51-18.50	5	0	0	0	0	0	11	14	11	2	1	2	0	1	3	8	58
18.51-24.00	3	0	0	1	0	0	3	2	17	2	1	1	0	5	0	5	40
>24.00	0	0	0	0	0	0	2	4	17	0	0	0	0	0	0	0	23
TOTAL	10	2	1	3	3	3	27	24	48	12	5	4	0	6	3	14	165

STABILITY CLASS D

STABILITY BASED ON: DELTA T BETWEEN 100.0 AND 10.0 METERS
WIND MEASURED AT: 100.0 METERS
WIND THRESHOLD AT: 1.00 MPH
JOINT FREQUENCY DISTRIBUTION OF WIND SPEED AND DIRECTION IN HOURS AT 100.00 METERS

SPEED (MPH)	N	NNE	NE	ENE	E	ESE	SE	SSE	S	SSW	SW	WSW	W	WNW	NW	NNW	TOTAL
CALM																	0
1.01- 3.50	1	1	0	0	2	0	1	1	0	0	0	2	1	3	0	1	13
3.51- 7.50	15	13	10	9	7	7	7	7	5	8	7	5	1	1	4	5	111
7.51-12.50	21	14	22	18	17	10	14	11	6	13	20	10	3	10	12	30	231
12.51-18.50	38	20	16	27	28	19	33	21	21	19	17	5	4	15	28	38	349
18.51-24.00	18	7	1	6	1	5	19	39	46	14	3	1	3	4	18	40	225
>24.00	5	1	0	0	0	14	8	21	60	4	2	3	3	3	2	6	132
TOTAL	98	56	49	60	55	55	82	100	138	58	49	26	15	36	64	120	1061

PROGRAM: JFD VERSION: PC-1.2
NPPD-COOPER NUCLEAR STATION JFD:100M WIND VS 10M DELTA T APR-JUN 2012
SITE IDENTIFIER: NPPD
DATA PERIOD EXAMINED: 4/ 1/12 - 6/30/12

*** APR-JUN 2012 ***

STABILITY CLASS E

STABILITY BASED ON: DELTA T BETWEEN 100.0 AND 10.0 METERS
WIND MEASURED AT: 100.0 METERS
WIND THRESHOLD AT: 1.00 MPH
JOINT FREQUENCY DISTRIBUTION OF WIND SPEED AND DIRECTION IN HOURS AT 100.00 METERS

SPEED (MPH)	N	NNE	NE	ENE	E	ESE	SE	SSE	S	SSW	SW	WSW	W	WNW	NW	NNW	TOTAL
CALM																	0
1.01- 3.50	0	2	0	0	0	1	0	0	0	0	0	0	0	0	1	0	4
3.51- 7.50	3	7	1	2	2	1	3	3	5	3	3	3	7	1	2	3	49
7.51-12.50	11	27	15	7	12	6	13	20	10	13	10	1	7	6	10	6	174
12.51-18.50	26	15	3	8	11	5	28	31	37	14	13	4	2	4	8	16	225
18.51-24.00	9	1	0	0	0	3	20	18	36	10	5	1	1	1	2	11	118
>24.00	0	0	0	0	0	0	4	5	17	0	1	0	0	0	0	3	30
TOTAL	49	52	19	17	25	16	68	77	105	40	32	9	17	12	23	39	600

STABILITY CLASS F

STABILITY BASED ON: DELTA T BETWEEN 100.0 AND 10.0 METERS
WIND MEASURED AT: 100.0 METERS
WIND THRESHOLD AT: 1.00 MPH
JOINT FREQUENCY DISTRIBUTION OF WIND SPEED AND DIRECTION IN HOURS AT 100.00 METERS

SPEED (MPH)	N	NNE	NE	ENE	E	ESE	SE	SSE	S	SSW	SW	WSW	W	WNW	NW	NNW	TOTAL
CALM																	0
1.01- 3.50	0	0	1	0	0	1	0	1	0	0	0	1	0	0	0	0	4
3.51- 7.50	2	1	3	2	1	2	2	1	1	6	3	0	1	0	0	1	26
7.51-12.50	5	3	4	2	2	8	13	19	8	15	4	1	0	0	2	5	91
12.51-18.50	3	0	0	0	0	3	3	11	11	4	2	1	0	3	1	8	50
18.51-24.00	1	0	0	0	0	0	0	0	2	0	1	0	0	1	1	1	7
>24.00	0	0	0	0	0	0	0	0	0	0	0	0	0	0	0	0	0
TOTAL	11	4	8	4	3	14	18	32	22	25	10	3	1	4	4	15	178

PROGRAM: JFD VERSION: PC-1.2
NPPD-COOPER NUCLEAR STATION JFD:100M WIND VS 10M DELTA T APR-JUN 2012
SITE IDENTIFIER: NPPD
DATA PERIOD EXAMINED: 4/ 1/12 - 6/30/12

*** APR-JUN 2012 ***

STABILITY CLASS G

STABILITY BASED ON: DELTA T BETWEEN 100.0 AND 10.0 METERS
WIND MEASURED AT: 100.0 METERS
WIND THRESHOLD AT: 1.00 MPH
JOINT FREQUENCY DISTRIBUTION OF WIND SPEED AND DIRECTION IN HOURS AT 100.00 METERS

SPEED (MPH)	N	NNE	NE	ENE	E	ESE	SE	SSE	S	SSW	SW	WSW	W	WNW	NW	NNW	TOTAL
CALM																	0
1.01- 3.50	1	0	0	0	0	1	0	0	0	0	1	0	0	0	0	0	3
3.51- 7.50	4	1	1	2	0	2	2	1	2	2	2	0	0	0	0	2	21
7.51-12.50	8	0	0	1	0	1	3	1	5	2	5	0	0	0	0	1	27
12.51-18.50	0	0	0	0	0	0	2	0	0	0	0	0	0	0	0	1	3
18.51-24.00	0	0	0	0	0	0	0	0	0	0	0	0	0	0	0	0	0
>24.00	0	0	0	0	0	0	0	0	0	0	0	0	0	0	0	0	0
TOTAL	13	1	1	3	0	4	7	2	7	4	8	0	0	0	0	4	54

STABILITY CLASS ALL

STABILITY BASED ON: DELTA T BETWEEN 100.0 AND 10.0 METERS
WIND MEASURED AT: 100.0 METERS
WIND THRESHOLD AT: 1.00 MPH
JOINT FREQUENCY DISTRIBUTION OF WIND SPEED AND DIRECTION IN HOURS AT 100.00 METERS

SPEED (MPH)	N	NNE	NE	ENE	E	ESE	SE	SSE	S	SSW	SW	WSW	W	WNW	NW	NNW	TOTAL
CALM																	0
1.01- 3.50	2	3	1	0	2	3	1	2	0	0	1	3	1	3	1	1	24
3.51- 7.50	25	23	16	15	10	13	15	12	13	20	15	8	9	2	6	11	213
7.51-12.50	46	45	41	30	34	27	57	62	32	51	42	13	10	16	24	43	573
12.51-18.50	72	35	19	35	39	27	83	85	91	42	33	12	6	23	40	71	713
18.51-24.00	31	8	1	7	1	8	46	68	131	29	10	3	4	11	21	57	436
>24.00	5	1	0	0	0	14	14	35	129	4	3	3	3	3	2	9	225
TOTAL	181	115	78	87	86	92	216	264	396	146	104	42	33	58	94	192	2184

PROGRAM: JFD VERSION: PC-1.2
NPPD-COOPER NUCLEAR STATION JFD:100M WIND VS 10M DELTA T APR-JUN 2012
SITE IDENTIFIER: NPPD
DATA PERIOD EXAMINED: 4/ 1/12 - 6/30/12

*** APR-JUN 2012 ***

STABILITY BASED ON: DELTA T BETWEEN 100.0 AND 10.0 METERS
WIND MEASURED AT: 100.0 METERS
WIND THRESHOLD AT: 1.00 MPH

TOTAL NUMBER OF OBSERVATIONS: 2184

TOTAL NUMBER OF VALID OBSERVATIONS: 2184

TOTAL NUMBER OF MISSING OBSERVATIONS: 0

PERCENT DATA RECOVERY FOR THIS PERIOD: 100.0 %

MEAN WIND SPEED FOR THIS PERIOD: 15.5 MPH

TOTAL NUMBER OF OBSERVATIONS WITH BACKUP DATA: 0

PERCENTAGE OCCURRENCE OF STABILITY CLASSES

A	B	C	D	E	F	G
1.83	3.94	7.55	48.58	27.47	8.15	2.47

DISTRIBUTION OF WIND DIRECTION VS STABILITY

	N	NNE	NE	ENE	E	ESE	SE	SSE	S	SSW	SW	WSW	W	WNW	NW	NNW	CALM
A	0	0	0	0	0	0	3	5	30	2	0	0	0	0	0	0	0
B	0	0	0	0	0	0	11	24	46	5	0	0	0	0	0	0	0
C	10	2	1	3	3	3	27	24	48	12	5	4	0	6	3	14	0
D	98	56	49	60	55	55	82	100	138	58	49	26	15	36	64	120	0
E	49	52	19	17	25	16	68	77	105	40	32	9	17	12	23	39	0
F	11	4	8	4	3	14	18	32	22	25	10	3	1	4	4	15	0
G	13	1	1	3	0	4	7	2	7	4	8	0	0	0	0	4	0
TOTAL	181	115	78	87	86	92	216	264	396	146	104	42	33	58	94	192	0

JFDs of 100-Meter Wind vs. Delta T

January-June 2012

PROGRAM: JFD VERSION: PC-1.2
NPPD-COOPER NUCLEAR STATION JFD:100M WIND VS 10M DELTA T JAN-JUN 2012
SITE IDENTIFIER: NPPD
DATA PERIOD EXAMINED: 1/ 1/12 - 6/30/12

*** JAN-JUN 2012 ***

STABILITY CLASS A

STABILITY BASED ON: DELTA T BETWEEN 100.0 AND 10.0 METERS
WIND MEASURED AT: 100.0 METERS
WIND THRESHOLD AT: 1.00 MPH
JOINT FREQUENCY DISTRIBUTION OF WIND SPEED AND DIRECTION IN HOURS AT 100.00 METERS

SPEED (MPH)	N	NNE	NE	ENE	E	ESE	SE	SSE	S	SSW	SW	WSW	W	WNW	NW	NNW	TOTAL
CALM																	0
1.01- 3.50	0	0	0	0	0	0	0	0	0	0	0	0	0	0	0	0	0
3.51- 7.50	0	0	0	0	0	0	0	0	0	0	0	0	0	0	0	0	0
7.51-12.50	0	0	0	0	0	0	0	1	0	0	0	1	0	0	0	0	2
12.51-18.50	0	0	0	0	0	0	1	1	4	0	0	0	0	0	0	0	6
18.51-24.00	0	0	0	0	0	0	2	2	17	3	0	0	0	0	0	0	24
>24.00	0	0	0	0	0	0	0	1	12	0	0	0	0	0	0	0	13
TOTAL	0	0	0	0	0	0	3	5	33	3	0	1	0	0	0	0	45

STABILITY CLASS B

STABILITY BASED ON: DELTA T BETWEEN 100.0 AND 10.0 METERS
WIND MEASURED AT: 100.0 METERS
WIND THRESHOLD AT: 1.00 MPH
JOINT FREQUENCY DISTRIBUTION OF WIND SPEED AND DIRECTION IN HOURS AT 100.00 METERS

SPEED (MPH)	N	NNE	NE	ENE	E	ESE	SE	SSE	S	SSW	SW	WSW	W	WNW	NW	NNW	TOTAL
CALM																	0
1.01- 3.50	0	0	0	0	0	0	0	0	0	0	0	0	0	0	0	0	0
3.51- 7.50	0	0	0	0	0	0	0	0	0	0	0	1	0	0	0	0	1
7.51-12.50	0	0	0	0	0	0	4	6	0	2	0	1	0	0	0	0	13
12.51-18.50	0	0	0	0	0	0	5	8	12	5	0	0	0	0	0	0	30
18.51-24.00	0	0	0	0	0	0	2	7	14	2	2	0	0	0	0	0	27
>24.00	0	0	0	0	0	0	0	5	30	0	0	0	0	0	0	0	35
TOTAL	0	0	0	0	0	0	11	26	56	9	2	2	0	0	0	0	106

PROGRAM: JFD VERSION: PC-1.2
NPPD-COOPER NUCLEAR STATION JFD:100M WIND VS 10M DELTA T JAN-JUN 2012
SITE IDENTIFIER: NPPD
DATA PERIOD EXAMINED: 1/ 1/12 - 6/30/12

*** JAN-JUN 2012 ***

STABILITY CLASS C

STABILITY BASED ON: DELTA T BETWEEN 100.0 AND 10.0 METERS
WIND MEASURED AT: 100.0 METERS
WIND THRESHOLD AT: 1.00 MPH
JOINT FREQUENCY DISTRIBUTION OF WIND SPEED AND DIRECTION IN HOURS AT 100.00 METERS

SPEED (MPH)	N	NNE	NE	ENE	E	ESE	SE	SSE	S	SSW	SW	WSW	W	WNW	NW	NNW	TOTAL
CALM																	0
1.01- 3.50	0	0	0	0	0	0	0	0	0	0	0	0	0	0	0	0	0
3.51- 7.50	1	1	1	0	1	1	1	0	1	1	0	0	0	0	0	0	8
7.51-12.50	1	2	0	2	3	3	10	6	6	11	3	1	1	0	0	1	50
12.51-18.50	6	0	0	0	0	0	14	17	12	4	4	4	1	1	3	9	75
18.51-24.00	3	0	0	1	0	0	4	4	18	7	3	4	0	5	0	7	56
>24.00	0	0	0	0	0	0	2	4	27	0	1	0	0	0	0	3	37
TOTAL	11	3	1	3	4	4	31	31	64	23	11	9	2	6	3	20	226

STABILITY CLASS D

STABILITY BASED ON: DELTA T BETWEEN 100.0 AND 10.0 METERS
WIND MEASURED AT: 100.0 METERS
WIND THRESHOLD AT: 1.00 MPH
JOINT FREQUENCY DISTRIBUTION OF WIND SPEED AND DIRECTION IN HOURS AT 100.00 METERS

SPEED (MPH)	N	NNE	NE	ENE	E	ESE	SE	SSE	S	SSW	SW	WSW	W	WNW	NW	NNW	TOTAL
CALM																	0
1.01- 3.50	1	2	0	1	3	2	3	1	0	0	3	2	1	3	1	2	25
3.51- 7.50	32	20	13	11	14	12	15	13	13	18	12	11	5	5	10	16	220
7.51-12.50	46	23	29	22	27	39	37	21	25	35	34	16	10	30	43	41	478
12.51-18.50	83	25	16	27	37	34	47	32	43	32	40	16	19	24	64	73	612
18.51-24.00	41	11	2	7	11	9	32	59	83	21	7	6	9	26	66	77	467
>24.00	6	1	1	1	12	14	16	50	95	8	2	11	15	13	52	43	340
TOTAL	209	82	61	69	104	110	150	176	259	114	98	62	59	101	236	252	2142

PROGRAM: JFD VERSION: PC-1.2
NPPD-COOPER NUCLEAR STATION JFD:100M WIND VS 10M DELTA T JAN-JUN 2012
SITE IDENTIFIER: NPPD
DATA PERIOD EXAMINED: 1/ 1/12 - 6/30/12

*** JAN-JUN 2012 ***

STABILITY CLASS E

STABILITY BASED ON: DELTA T BETWEEN 100.0 AND 10.0 METERS
WIND MEASURED AT: 100.0 METERS
WIND THRESHOLD AT: 1.00 MPH
JOINT FREQUENCY DISTRIBUTION OF WIND SPEED AND DIRECTION IN HOURS AT 100.00 METERS

SPEED (MPH)	N	NNE	NE	ENE	E	ESE	SE	SSE	S	SSW	SW	WSW	W	WNW	NW	NNW	TOTAL
CALM																	0
1.01- 3.50	1	3	0	1	0	2	0	0	1	1	2	1	1	0	2	0	15
3.51- 7.50	9	11	4	5	3	3	4	5	8	5	6	5	10	3	5	5	91
7.51-12.50	24	36	23	7	16	13	25	26	19	29	12	4	12	13	27	15	301
12.51-18.50	28	19	4	9	13	15	48	50	74	43	26	10	8	16	43	32	438
18.51-24.00	14	1	2	0	1	10	30	33	68	16	25	7	13	15	22	12	269
>24.00	0	0	4	0	0	0	17	16	26	1	9	4	7	6	8	3	101
TOTAL	76	70	37	22	33	43	124	130	196	95	80	31	51	53	107	67	1215

STABILITY CLASS F

STABILITY BASED ON: DELTA T BETWEEN 100.0 AND 10.0 METERS
WIND MEASURED AT: 100.0 METERS
WIND THRESHOLD AT: 1.00 MPH
JOINT FREQUENCY DISTRIBUTION OF WIND SPEED AND DIRECTION IN HOURS AT 100.00 METERS

SPEED (MPH)	N	NNE	NE	ENE	E	ESE	SE	SSE	S	SSW	SW	WSW	W	WNW	NW	NNW	TOTAL
CALM																	0
1.01- 3.50	0	0	2	1	0	1	1	3	0	1	1	2	1	3	1	0	17
3.51- 7.50	5	5	6	10	4	5	3	6	6	10	5	2	6	2	1	1	77
7.51-12.50	6	6	6	2	3	11	24	31	18	34	11	6	5	7	6	8	184
12.51-18.50	4	0	0	0	0	3	5	17	14	19	10	5	3	8	7	15	110
18.51-24.00	1	3	0	0	0	0	0	1	7	0	9	3	7	4	3	2	40
>24.00	0	0	0	0	0	0	0	0	0	0	1	5	4	3	0	0	13
TOTAL	16	14	14	13	7	20	33	58	45	64	37	23	26	27	18	26	441

PROGRAM: JFD VERSION: PC-1.2
NPPD-COOPER NUCLEAR STATION JFD:100M WIND VS 10M DELTA T JAN-JUN 2012
SITE IDENTIFIER: NPPD
DATA PERIOD EXAMINED: 1/ 1/12 - 6/30/12

*** JAN-JUN 2012 ***

STABILITY CLASS G

STABILITY BASED ON: DELTA T BETWEEN 100.0 AND 10.0 METERS
WIND MEASURED AT: 100.0 METERS
WIND THRESHOLD AT: 1.00 MPH
JOINT FREQUENCY DISTRIBUTION OF WIND SPEED AND DIRECTION IN HOURS AT 100.00 METERS

SPEED (MPH)	N	NNE	NE	ENE	E	ESE	SE	SSE	S	SSW	SW	WSW	W	WNW	NW	NNW	TOTAL
CALM																	0
1.01- 3.50	1	1	0	1	1	1	0	2	0	1	1	1	0	0	1	1	12
3.51- 7.50	5	1	2	6	1	4	2	4	4	7	8	2	1	3	3	4	57
7.51-12.50	9	2	0	1	1	2	3	1	8	11	12	9	5	6	2	2	74
12.51-18.50	0	0	0	0	0	0	4	1	2	0	9	2	3	1	0	2	24
18.51-24.00	7	3	0	0	0	0	0	0	1	0	0	5	0	0	1	3	20
>24.00	5	0	0	0	0	0	0	0	0	0	1	0	0	0	0	0	6
TOTAL	27	7	2	8	3	7	9	8	15	19	31	19	9	10	7	12	193

STABILITY CLASS ALL

STABILITY BASED ON: DELTA T BETWEEN 100.0 AND 10.0 METERS
WIND MEASURED AT: 100.0 METERS
WIND THRESHOLD AT: 1.00 MPH
JOINT FREQUENCY DISTRIBUTION OF WIND SPEED AND DIRECTION IN HOURS AT 100.00 METERS

SPEED (MPH)	N	NNE	NE	ENE	E	ESE	SE	SSE	S	SSW	SW	WSW	W	WNW	NW	NNW	TOTAL
CALM																	0
1.01- 3.50	3	6	2	4	4	6	4	6	1	3	7	6	3	6	5	3	69
3.51- 7.50	52	38	26	32	23	25	25	28	32	41	31	21	22	13	19	26	454
7.51-12.50	86	69	58	34	50	68	103	92	76	122	72	38	33	56	78	67	1102
12.51-18.50	121	44	20	36	50	52	124	126	161	103	89	37	34	50	117	131	1295
18.51-24.00	66	18	4	8	12	19	70	106	208	49	46	25	29	50	92	101	903
>24.00	11	1	5	1	12	14	35	76	190	9	14	20	26	22	60	49	545
TOTAL	339	176	115	115	151	184	361	434	668	327	259	147	147	197	371	377	4368

PROGRAM: JFD VERSION: PC-1.2
NPPD-COOPER NUCLEAR STATION JFD:100M WIND VS 10M DELTA T JAN-JUN 2012
SITE IDENTIFIER: NPPD
DATA PERIOD EXAMINED: 1/ 1/12 - 6/30/12

*** JAN-JUN 2012 ***

STABILITY BASED ON: DELTA T BETWEEN 100.0 AND 10.0 METERS
WIND MEASURED AT: 100.0 METERS
WIND THRESHOLD AT: 1.00 MPH

TOTAL NUMBER OF OBSERVATIONS: 4368

TOTAL NUMBER OF VALID OBSERVATIONS: 4368

TOTAL NUMBER OF MISSING OBSERVATIONS: 0

PERCENT DATA RECOVERY FOR THIS PERIOD: 100.0 %

MEAN WIND SPEED FOR THIS PERIOD: 15.7 MPH

TOTAL NUMBER OF OBSERVATIONS WITH BACKUP DATA: 0

PERCENTAGE OCCURRENCE OF STABILITY CLASSES

A	B	C	D	E	F	G
1.03	2.43	5.17	49.04	27.82	10.10	4.42

DISTRIBUTION OF WIND DIRECTION VS STABILITY

	N	NNE	NE	ENE	E	ESE	SE	SSE	S	SSW	SW	WSW	W	WNW	NW	NNW	CALM
A	0	0	0	0	0	0	3	5	33	3	0	1	0	0	0	0	0
B	0	0	0	0	0	0	11	26	56	9	2	2	0	0	0	0	0
C	11	3	1	3	4	4	31	31	64	23	11	9	2	6	3	20	0
D	209	82	61	69	104	110	150	176	259	114	98	62	59	101	236	252	0
E	76	70	37	22	33	43	124	130	196	95	80	31	51	53	107	67	0
F	16	14	14	13	7	20	33	58	45	64	37	23	26	27	18	26	0
G	27	7	2	8	3	7	9	8	15	19	31	19	9	10	7	12	0
TOTAL	339	176	115	115	151	184	361	434	668	327	259	147	147	197	371	377	0

Stability Classes by Hour of Day

100-Meter Wind vs. Delta T

January-June 2012

PROGRAM: JFD VERSION: PC-1.2
NPPD-COOPER NUCLEAR STATION JFD:100M WIND VS 10M DELTA T JAN-JUN 2012
SITE IDENTIFIER: NPPD
DATA PERIOD EXAMINED: 1/ 1/12 - 6/30/12
STABILITY BASED ON: DELTA T BETWEEN 100.0 AND 10.0 METERS

HOURLY STABILITIES

YR	MN	DY	1	2	3	4	5	6	7	8	9	10	11	12	13	14	15	16	17	18	19	20	21	22	23	24
			HOURS																							
12	1	1	D	D	D	D	D	D	D	E	E	D	D	D	D	D	D	D	D	D	E	E	E	E	E	E
12	1	2	E	E	E	E	E	E	E	E	E	D	D	D	D	D	D	D	D	E	E	E	E	E	F	F
12	1	3	F	F	F	F	E	E	E	E	D	D	D	D	D	D	D	D	E	E	E	E	E	E	E	E
12	1	4	F	F	E	E	E	E	E	E	E	D	D	D	D	D	D	D	D	F	F	G	F	F	E	F
12	1	5	E	F	F	E	F	F	F	G	E	E	D	D	D	D	D	D	D	E	F	F	F	E	E	E
12	1	6	E	E	E	F	F	E	F	F	F	E	D	D	D	D	D	D	D	E	E	E	E	E	F	E
12	1	7	E	E	F	F	F	F	G	G	F	E	D	D	D	D	D	D	D	E	E	F	F	F	F	F
12	1	8	F	F	F	F	F	F	F	F	F	E	E	D	D	D	D	D	D	E	F	F	F	G	G	G
12	1	9	G	G	G	F	F	F	G	G	F	E	D	D	D	D	D	D	D	E	F	F	F	F	F	F
12	1	10	F	F	F	G	G	F	G	G	G	F	E	D	D	D	D	D	D	E	F	F	G	G	G	G
12	1	11	G	G	G	G	G	G	F	F	E	D	D	D	D	D	D	D	D	D	D	D	D	D	D	D
12	1	12	D	D	D	D	D	D	D	D	D	D	D	D	D	D	D	D	D	D	D	D	D	D	D	D
12	1	13	D	D	D	D	E	E	D	E	E	D	D	D	D	D	D	D	D	E	F	F	F	E	E	E
12	1	14	E	D	E	E	E	D	E	E	E	D	D	D	D	D	D	D	D	E	F	G	G	G	G	G
12	1	15	F	G	G	F	E	E	E	E	D	D	D	D	D	D	D	D	D	E	F	F	F	E	E	E
12	1	16	E	E	E	F	F	F	G	G	F	D	D	D	D	D	D	D	D	D	D	D	D	D	D	D
12	1	17	D	D	D	D	D	D	D	D	D	D	D	D	D	D	D	D	D	E	E	F	G	G	F	F
12	1	18	F	F	F	F	G	E	E	D	D	D	D	D	D	D	D	D	D	E	E	E	D	E	D	D
12	1	19	D	D	D	D	D	D	D	D	D	D	D	D	D	D	D	D	D	D	D	D	D	D	D	D
12	1	20	D	D	D	D	D	D	D	D	D	D	D	D	D	D	D	D	D	D	D	D	D	D	D	D
12	1	21	D	D	D	D	D	D	D	D	D	D	D	D	D	D	D	D	D	D	D	D	D	D	D	D
12	1	22	D	D	D	D	D	E	D	D	E	D	D	D	D	D	D	D	D	D	D	D	D	D	D	D
12	1	23	D	D	D	D	D	D	D	D	D	D	D	D	D	D	D	D	D	D	E	E	F	F	F	F
12	1	24	F	F	G	G	F	F	F	E	E	D	D	D	D	D	D	D	D	D	E	E	E	E	D	D
12	1	25	E	E	D	E	E	E	E	E	E	E	D	D	D	D	D	D	D	D	E	F	F	G	G	G
12	1	26	G	G	G	G	G	F	E	F	F	E	D	D	D	D	D	D	D	D	E	E	E	F	E	F
12	1	27	F	G	F	F	F	F	E	E	E	E	D	D	D	D	D	D	D	D	D	D	E	E	E	E
12	1	28	E	E	E	E	E	F	F	F	F	D	D	D	D	D	D	D	D	E	E	F	F	F	E	E
12	1	29	E	E	F	E	F	F	E	E	E	D	D	D	D	D	D	D	D	D	E	F	F	E	E	F
12	1	30	E	E	E	E	E	E	E	E	E	D	D	D	C	C	C	D	D	E	F	F	E	F	E	E
12	1	31	E	E	E	F	F	F	F	F	E	E	D	D	D	D	D	D	D	E	E	F	F	F	G	G
12	2	1	G	G	G	G	G	G	G	G	G	G	F	D	D	D	D	D	D	E	E	F	F	F	G	G
12	2	2	F	G	G	G	G	G	G	G	G	F	F	E	D	D	D	D	D	E	E	E	E	E	E	E
12	2	3	E	E	E	D	E	E	E	D	D	D	D	D	D	D	D	D	D	D	D	D	D	E	E	E
12	2	4	E	E	F	F	F	G	G	G	G	G	G	G	G	G	G	G	G	G	G	G	G	G	G	G
12	2	5	F	E	E	E	E	E	E	E	E	D	D	D	D	D	D	D	D	D	E	E	E	E	E	E
12	2	6	E	D	D	E	F	E	E	F	E	D	D	D	D	B	A	B	D	E	G	G	G	F	F	F
12	2	7	F	G	E	E	D	D	D	D	D	D	D	D	D	D	D	D	D	D	D	D	D	D	D	D
12	2	8	D	D	D	D	D	D	D	D	D	D	D	D	D	D	D	D	D	D	D	D	D	D	D	D
12	2	9	D	D	D	D	D	D	D	D	D	D	D	D	D	D	D	D	D	D	E	E	E	E	E	E
12	2	10	E	E	D	D	D	D	D	D	D	D	C	C	C	D	C	C	D	D	D	D	D	D	D	D
12	2	11	D	D	D	D	D	D	D	D	D	D	D	D	D	D	D	D	D	D	E	E	E	E	E	E
12	2	12	E	E	E	E	E	F	F	F	E	D	D	C	C	B	B	B	D	D	D	D	D	D	D	D
12	2	13	D	D	D	D	D	D	D	D	D	D	D	D	D	D	D	D	D	D	E	E	E	E	E	E
12	2	14	E	E	E	E	E	E	E	E	E	E	D	C	D	D	D	D	D	E	E	E	E	E	E	F

PROGRAM: JFD VERSION: PC-1.2
NPPD-COOPER NUCLEAR STATION JFD:100M WIND VS 10M DELTA T JAN-JUN 2012
SITE IDENTIFIER: NPPD
DATA PERIOD EXAMINED: 1/ 1/12 - 6/30/12
STABILITY BASED ON: DELTA T BETWEEN 100.0 AND 10.0 METERS

HOURLY STABILITIES

YR	MN	DY	1	2	3	4	5	6	7	8	9	10	11	12	13	14	15	16	17	18	19	20	21	22	23	24
			HOURS																							
12	2	15	E	F	F	F	F	F	F	F	F	E	D	D	D	D	D	D	D	D	E	E	D	D	E	E
12	2	16	E	E	E	E	E	E	E	E	E	D	D	D	D	D	D	D	D	D	E	F	G	F	F	F
12	2	17	E	E	E	E	E	E	E	E	E	D	D	D	D	D	D	D	D	D	E	E	E	E	D	D
12	2	18	D	D	D	E	E	E	E	F	E	D	D	D	D	D	D	D	D	D	D	E	E	E	E	E
12	2	19	E	F	F	F	F	F	F	F	F	D	D	D	C	C	D	D	D	D	E	E	E	E	E	E
12	2	20	E	E	E	E	E	E	E	D	E	D	D	D	D	D	D	D	E	E	E	E	E	E	E	E
12	2	21	D	D	D	D	D	D	E	E	E	D	D	D	D	D	D	D	D	D	E	F	F	F	E	E
12	2	22	E	E	E	E	E	E	E	E	E	D	D	D	D	D	D	D	D	D	E	F	E	E	E	E
12	2	23	E	E	E	E	D	E	E	E	D	D	D	D	D	D	D	D	D	D	D	D	D	D	D	D
12	2	24	D	D	D	D	D	D	D	D	D	D	D	D	D	D	D	D	D	D	D	E	E	E	E	D
12	2	25	D	D	D	D	E	E	E	E	D	D	D	D	D	C	C	C	D	D	D	E	E	E	E	E
12	2	26	E	E	E	E	E	E	E	E	D	D	D	D	D	C	D	D	D	D	E	E	E	F	F	D
12	2	27	D	D	D	D	D	E	E	E	D	D	D	D	C	D	C	D	D	D	D	D	D	D	D	E
12	2	28	E	E	E	D	D	D	D	E	E	D	D	D	D	D	D	D	D	E	E	E	E	E	E	E
12	2	29	D	D	D	D	D	D	D	D	D	D	D	D	D	D	D	D	D	D	D	E	E	E	E	E
12	3	1	E	F	F	F	F	F	F	F	E	D	D	D	D	D	D	D	D	D	E	E	D	D	D	D
12	3	2	D	D	D	D	D	D	D	D	D	D	D	D	D	D	D	D	D	D	D	E	E	D	D	D
12	3	3	E	E	E	E	E	D	D	D	D	D	D	D	D	D	D	D	D	D	E	E	E	F	F	F
12	3	4	F	F	F	F	G	F	F	F	E	E	D	D	D	D	D	D	D	D	D	D	D	D	D	D
12	3	5	E	E	F	F	F	F	F	F	E	D	C	B	C	B	C	C	D	D	E	E	E	F	E	E
12	3	6	E	E	E	E	E	E	E	E	D	D	C	C	C	C	B	B	D	D	D	E	D	D	D	D
12	3	7	D	E	D	D	D	D	D	D	D	D	D	D	D	D	D	D	D	D	D	D	D	D	D	D
12	3	8	D	D	D	D	E	E	E	E	D	D	D	D	C	C	D	D	D	D	E	F	F	G	G	G
12	3	9	G	F	F	E	E	E	E	E	D	D	D	D	D	D	D	C	D	D	E	F	F	F	F	F
12	3	10	F	F	F	F	F	F	F	F	D	D	C	B	B	B	B	C	D	D	E	E	E	E	F	F
12	3	11	F	E	E	E	E	E	D	D	D	D	D	D	D	D	D	D	E	E	E	E	E	E	E	E
12	3	12	E	E	E	E	E	E	E	E	E	D	D	D	D	D	D	D	D	D	E	G	G	G	G	G
12	3	13	G	G	G	G	G	G	G	G	F	E	D	C	C	D	C	D	D	D	E	E	E	E	E	E
12	3	14	E	E	E	E	E	E	E	E	D	D	C	B	C	C	C	D	D	D	E	F	G	G	G	F
12	3	15	F	F	F	F	F	F	F	F	E	D	D	D	D	D	C	D	D	D	E	E	E	E	E	F
12	3	16	F	F	E	E	E	E	E	E	D	D	D	D	B	B	C	B	C	D	E	E	E	E	E	E
12	3	17	E	E	E	E	D	D	D	D	D	D	C	B	A	A	B	C	D	D	D	D	D	D	D	E
12	3	18	E	E	E	D	D	D	D	D	D	D	C	A	A	B	C	C	D	D	D	D	D	D	D	D
12	3	19	E	D	D	D	D	D	D	D	D	D	D	D	D	D	D	D	D	D	D	D	D	D	D	D
12	3	20	D	D	D	D	D	D	D	E	D	D	D	D	D	D	D	E	E	E	E	E	E	E	E	E
12	3	21	E	E	E	E	E	E	E	E	E	D	D	D	D	E	E	E	D	D	D	D	D	D	D	D
12	3	22	D	E	D	E	E	E	E	E	D	D	D	D	D	C	D	D	D	D	D	D	E	E	E	E
12	3	23	E	E	E	E	E	E	E	E	D	D	D	D	D	D	D	D	D	D	E	F	F	G	F	F
12	3	24	F	F	F	F	F	E	F	E	D	D	D	D	D	D	D	D	D	D	E	F	G	G	G	G
12	3	25	G	G	G	G	G	G	G	G	F	E	D	D	D	D	D	D	D	D	E	F	F	F	F	F
12	3	26	F	F	F	F	E	E	E	E	E	E	D	D	C	C	C	C	D	D	D	E	E	D	D	D
12	3	27	E	E	E	E	E	E	E	E	D	D	D	C	D	D	C	C	D	D	E	E	F	F	G	F
12	3	28	G	G	G	G	G	G	G	G	E	D	D	C	D	D	D	D	D	D	D	D	D	D	D	D
12	3	29	D	D	D	D	D	D	D	D	D	E	E	D	D	D	D	D	D	D	E	E	E	E	E	E
12	3	30	E	E	E	E	E	E	E	E	D	D	D	D	D	D	D	D	D	D	D	E	E	E	E	E

PROGRAM: JFD VERSION: PC-1.2
NPPD-COOPER NUCLEAR STATION JFD:100M WIND VS 10M DELTA T JAN-JUN 2012
SITE IDENTIFIER: NPPD
DATA PERIOD EXAMINED: 1/ 1/12 - 6/30/12
STABILITY BASED ON: DELTA T BETWEEN 100.0 AND 10.0 METERS

HOURLY STABILITIES
HOURS

YR	MN	DY	1	2	3	4	5	6	7	8	9	10	11	12	13	14	15	16	17	18	19	20	21	22	23	24
12	3	31	E	E	E	E	E	E	E	E	D	D	D	C	C	C	C	C	D	D	E	E	E	E	E	E
12	4	1	E	E	E	F	F	F	F	F	D	D	C	C	C	C	B	C	C	D	D	E	E	E	E	E
12	4	2	E	E	E	E	E	E	E	D	D	C	B	B	B	B	B	B	C	D	D	E	E	E	D	D
12	4	3	D	D	D	D	D	D	D	D	D	D	D	D	D	C	D	D	D	D	D	D	D	D	D	D
12	4	4	D	D	D	D	D	D	D	D	D	D	D	D	D	D	C	D	D	D	D	D	D	D	E	E
12	4	5	D	D	D	D	D	D	D	D	D	D	D	D	D	D	D	D	D	D	D	E	E	E	E	F
12	4	6	F	F	E	E	E	E	E	D	D	D	C	C	C	C	C	C	D	D	D	E	E	E	E	E
12	4	7	E	E	E	E	E	E	E	E	E	E	E	D	D	D	D	D	D	D	E	E	F	F	F	G
12	4	8	G	G	G	G	G	G	G	G	E	D	D	C	C	D	C	D	D	D	D	E	E	E	F	F
12	4	9	F	F	F	G	G	G	G	F	E	D	D	D	D	D	D	D	D	D	D	E	E	E	E	D
12	4	10	D	E	E	E	E	E	E	E	D	D	D	D	D	D	D	D	D	D	D	E	E	E	E	E
12	4	11	D	D	D	D	D	E	D	D	D	D	D	D	D	D	D	D	D	D	D	D	E	E	E	E
12	4	12	E	E	E	E	D	D	D	D	D	D	D	D	D	D	D	D	D	D	D	D	D	D	D	D
12	4	13	D	D	E	E	E	D	D	D	D	D	D	D	D	D	D	D	D	D	E	F	F	F	F	F
12	4	14	G	F	F	G	G	F	F	F	E	D	D	D	D	D	D	D	E	E	E	E	E	E	E	E
12	4	15	E	E	E	E	E	E	E	D	D	D	D	D	D	D	D	D	D	D	D	D	D	D	D	D
12	4	16	D	D	D	D	D	D	D	D	D	D	D	D	D	D	D	D	D	D	D	E	E	E	E	E
12	4	17	E	E	E	E	E	E	E	E	D	D	D	C	C	C	C	D	D	D	D	E	E	E	E	E
12	4	18	E	E	E	E	E	E	E	E	D	D	D	D	D	C	C	D	D	D	E	F	F	G	F	F
12	4	19	E	E	E	E	E	D	D	D	D	D	C	D	D	D	D	D	D	D	D	D	D	D	D	D
12	4	20	D	D	D	D	D	D	D	D	D	D	D	C	C	C	C	D	D	D	D	E	E	E	F	F
12	4	21	F	F	F	F	F	F	E	E	D	D	C	C	C	C	D	D	D	D	D	E	E	E	E	E
12	4	22	D	D	D	D	D	D	D	D	D	D	D	D	C	C	C	D	D	D	D	D	E	E	E	E
12	4	23	F	F	F	F	F	G	F	E	D	D	D	D	D	D	D	D	D	D	D	F	F	F	E	F
12	4	24	F	F	F	F	F	F	F	D	D	D	D	D	D	D	D	D	D	D	E	E	E	F	F	F
12	4	25	F	G	G	F	E	E	E	E	D	D	D	D	D	D	D	D	D	D	E	E	E	F	F	E
12	4	26	F	G	G	G	G	G	E	D	D	D	D	D	D	D	D	D	D	D	D	D	D	D	D	D
12	4	27	D	D	D	D	D	D	D	D	D	D	D	D	D	D	D	D	D	D	D	D	D	D	D	D
12	4	28	D	E	D	E	E	D	D	D	D	D	D	D	C	D	D	D	D	D	D	D	D	D	D	D
12	4	29	D	D	D	D	D	D	D	D	E	E	E	D	D	D	D	D	E	E	E	E	E	E	E	E
12	4	30	E	E	E	E	E	E	E	E	D	D	D	D	D	D	C	D	D	D	D	D	D	E	E	D
12	5	1	D	E	E	E	E	E	E	D	D	D	C	B	B	B	B	C	D	D	D	D	D	D	D	D
12	5	2	E	E	E	E	E	E	E	D	D	D	D	D	D	C	C	C	D	D	D	D	E	D	D	D
12	5	3	D	D	E	E	E	E	E	D	D	D	B	B	C	D	D	D	D	D	D	E	E	E	E	E
12	5	4	E	E	E	E	E	E	D	D	D	D	C	C	B	C	C	C	C	D	D	E	E	E	E	E
12	5	5	E	E	E	E	E	E	E	D	D	D	C	C	C	B	B	B	D	D	D	D	D	D	E	E
12	5	6	E	D	D	D	D	D	D	D	D	D	D	D	D	C	D	D	D	D	D	D	E	E	E	E
12	5	7	E	E	D	E	E	D	E	D	D	D	D	D	D	D	D	D	D	D	D	E	E	E	E	F
12	5	8	F	G	F	F	E	E	E	D	D	D	D	D	C	C	D	D	D	D	D	E	E	E	E	E
12	5	9	E	E	E	E	F	E	E	D	D	D	D	D	D	C	D	D	D	D	D	E	F	F	F	F
12	5	10	E	F	F	F	E	E	E	E	D	C	B	B	A	A	B	B	C	C	D	D	D	E	E	E
12	5	11	E	E	E	E	F	F	E	D	D	D	D	D	D	D	D	D	D	D	D	E	D	D	D	D
12	5	12	D	D	D	D	D	D	D	D	D	D	D	D	D	D	D	D	D	D	D	E	E	E	E	E
12	5	13	E	E	E	E	E	E	E	D	D	D	D	D	D	C	D	D	D	D	D	F	F	F	G	G
12	5	14	G	G	G	G	G	G	G	E	D	D	C	D	C	C	D	D	D	D	D	E	F	F	E	E

PROGRAM: JFD VERSION: PC-1.2
NPPD-COOPER NUCLEAR STATION JFD:100M WIND VS 10M DELTA T JAN-JUN 2012
SITE IDENTIFIER: NPPD
DATA PERIOD EXAMINED: 1/ 1/12 - 6/30/12
STABILITY BASED ON: DELTA T BETWEEN 100.0 AND 10.0 METERS

HOURLY STABILITIES

YR	MN	DY	1	2	3	4	5	6	7	8	9	10	11	12	13	14	15	16	17	18	19	20	21	22	23	24
			HOURS																							
12	5	15	E	E	E	E	E	E	E	D	D	D	C	C	C	D	D	D	D	D	E	E	E	E	E	E
12	5	16	E	E	E	E	E	E	E	D	D	D	C	D	C	D	D	D	D	D	D	D	E	E	E	F
12	5	17	F	F	E	E	E	E	D	D	C	C	B	B	A	A	B	B	C	D	D	D	D	D	D	D
12	5	18	D	D	E	E	E	E	E	D	D	B	B	B	B	C	B	C	C	D	D	D	D	E	E	E
12	5	19	E	D	D	D	D	D	D	D	D	C	B	C	C	B	B	B	C	D	D	D	D	D	D	D
12	5	20	D	D	D	D	D	D	D	D	D	D	D	C	C	C	C	D	D	D	D	E	E	E	E	E
12	5	21	E	E	E	E	F	F	F	D	D	D	C	C	C	D	D	D	D	D	D	E	F	F	F	F
12	5	22	E	E	E	E	E	E	E	D	D	D	B	A	A	A	A	A	B	C	D	D	D	D	D	D
12	5	23	D	D	D	D	D	D	D	D	D	C	B	B	A	A	B	C	D	D	D	D	D	D	D	D
12	5	24	D	D	D	D	D	D	D	D	D	D	D	C	C	C	C	D	D	D	D	E	E	D	E	E
12	5	25	E	E	E	E	E	E	E	D	D	D	D	D	D	D	D	D	D	D	D	D	D	D	D	D
12	5	26	D	E	D	D	E	E	D	D	D	C	B	B	B	B	C	C	D	D	D	D	D	D	D	D
12	5	27	E	E	E	E	E	D	D	D	C	B	A	A	A	B	A	A	C	D	D	D	D	D	D	D
12	5	28	D	D	D	E	E	E	D	D	D	D	D	C	C	C	D	D	D	D	D	E	F	F	F	F
12	5	29	F	F	F	F	F	F	E	D	D	D	C	C	C	C	C	C	D	D	D	E	E	E	F	F
12	5	30	E	E	E	E	E	E	D	D	D	D	D	C	C	D	D	E	E	E	E	E	E	E	E	E
12	5	31	D	E	E	D	D	D	D	D	D	D	D	D	D	D	D	D	D	D	D	D	E	E	E	E
12	6	1	F	F	F	F	E	F	E	D	D	D	D	D	D	D	D	D	D	D	D	D	D	D	E	E
12	6	2	E	E	E	E	E	E	E	D	D	D	D	D	D	D	C	D	D	D	D	E	F	G	G	G
12	6	3	G	F	F	F	F	F	E	E	D	C	C	D	B	A	C	D	D	D	D	E	E	F	F	E
12	6	4	E	E	E	E	E	E	E	D	D	D	D	D	D	D	C	D	D	D	D	E	F	E	E	E
12	6	5	E	E	F	F	F	F	E	D	D	C	C	C	B	C	C	D	D	D	D	D	F	F	F	F
12	6	6	F	F	E	F	F	F	E	D	D	B	B	B	B	B	B	B	C	C	D	D	D	D	E	E
12	6	7	E	E	E	E	E	E	E	D	C	C	B	A	C	C	B	B	C	C	D	D	E	F	F	E
12	6	8	E	E	E	E	E	E	E	D	D	C	B	B	A	A	A	B	B	C	D	D	E	F	F	F
12	6	9	F	E	E	E	E	E	E	D	C	B	A	A	A	A	A	B	B	D	D	D	D	E	E	E
12	6	10	E	E	D	D	D	D	D	D	C	B	B	B	B	C	D	D	D	D	D	D	E	E	D	D
12	6	11	E	E	E	E	E	E	E	D	D	D	D	D	C	C	D	D	D	D	D	E	E	F	F	F
12	6	12	E	G	G	G	G	G	E	D	D	D	D	D	C	C	D	D	D	D	D	D	E	E	F	F
12	6	13	F	F	E	E	E	E	E	D	C	C	B	A	A	A	A	B	C	C	D	D	D	D	D	D
12	6	14	D	D	D	D	E	D	D	D	C	B	A	A	A	A	A	A	B	D	D	D	D	D	E	D
12	6	15	E	E	E	E	E	E	E	E	D	D	D	D	D	D	D	D	D	D	D	D	E	E	E	F
12	6	16	E	F	F	F	F	F	E	D	D	D	D	D	D	D	D	D	D	D	D	D	E	F	F	F
12	6	17	F	F	G	G	F	F	E	D	D	C	C	B	B	C	C	C	D	D	D	E	E	E	E	E
12	6	18	E	E	E	E	E	D	D	D	D	D	D	D	D	D	D	D	D	D	D	E	E	E	E	E
12	6	19	E	E	E	E	E	D	D	D	C	B	B	B	A	A	A	B	C	D	D	D	E	E	E	E
12	6	20	E	E	E	D	D	D	D	D	D	C	D	D	B	C	D	D	D	D	E	E	E	D	E	E
12	6	21	E	E	E	E	E	E	E	D	D	D	D	D	D	D	D	D	D	D	D	E	F	F	F	G
12	6	22	G	G	G	G	G	G	F	E	D	D	D	D	B	C	B	C	C	C	D	E	E	E	E	E
12	6	23	F	E	E	E	E	E	E	D	E	E	E	D	D	C	C	C	D	D	D	D	D	D	E	E
12	6	24	E	E	E	E	E	E	E	D	D	D	D	D	D	D	D	D	D	D	D	E	E	E	E	E
12	6	25	D	D	E	E	E	D	D	D	D	D	D	D	D	D	D	D	D	D	D	D	D	D	D	D
12	6	26	D	D	D	D	D	D	D	D	D	C	B	B	B	B	A	B	C	D	D	D	E	E	E	E
12	6	27	E	E	E	E	E	E	E	D	D	D	D	D	D	C	C	C	D	D	E	E	E	E	E	E
12	6	28	E	E	E	E	E	F	F	D	D	D	D	D	D	D	D	D	D	D	E	E	F	F	E	F

PROGRAM: JFD VERSION: PC-1.2
NPPD-COOPER NUCLEAR STATION JFD:100M WIND VS 10M DELTA T JAN-JUN 2012
SITE IDENTIFIER: NPPD
DATA PERIOD EXAMINED: 1/ 1/12 - 6/30/12
STABILITY BASED ON: DELTA T BETWEEN 100.0 AND 10.0 METERS

HOURLY STABILITIES

YR	MN	DY	HOURS 1	2	3	4	5	6	7	8	9	10	11	12	13	14	15	16	17	18	19	20	21	22	23	24
12	6	29	F	F	E	E	F	F	E	E	D	D	D	D	E	D	D	D	D	D	E	E	E	E	E	E
12	6	30	F	F	G	F	F	F	E	E	D	D	D	D	D	C	C	D	D	D	E	E	E	E	E	F

JFDs of 100-Meter Wind vs. Delta T

July-September 2012

PROGRAM: JFD VERSION: PC-1.2
NPPD-COOPER NUCLEAR STATION JFD:100M WIND VS 10M DELTA T JUL-SEP 2012
SITE IDENTIFIER: NPPD
DATA PERIOD EXAMINED: 7/ 1/12 - 9/30/12

*** JUL-SEP 2012 ***

STABILITY CLASS A

STABILITY BASED ON: DELTA T BETWEEN 100.0 AND 10.0 METERS
WIND MEASURED AT: 100.0 METERS
WIND THRESHOLD AT: 1.00 MPH
JOINT FREQUENCY DISTRIBUTION OF WIND SPEED AND DIRECTION IN HOURS AT 100.00 METERS

SPEED (MPH)	N	NNE	NE	ENE	E	ESE	SE	SSE	S	SSW	SW	WSW	W	WNW	NW	NNW	TOTAL
CALM																	0
1.01- 3.50	0	0	0	0	0	0	0	0	0	0	0	0	0	0	0	0	0
3.51- 7.50	0	0	0	0	0	0	0	0	0	0	0	0	0	0	0	0	0
7.51-12.50	0	0	0	0	0	0	0	0	0	0	0	0	0	0	0	0	0
12.51-18.50	0	0	0	0	0	0	1	5	9	1	0	0	0	0	0	0	16
18.51-24.00	0	0	0	0	0	0	0	0	6	0	0	0	0	0	0	0	6
>24.00	0	0	0	0	0	0	0	0	1	0	0	0	0	0	0	0	1
TOTAL	0	0	0	0	0	0	1	5	16	1	0	0	0	0	0	0	23

STABILITY CLASS B

STABILITY BASED ON: DELTA T BETWEEN 100.0 AND 10.0 METERS
WIND MEASURED AT: 100.0 METERS
WIND THRESHOLD AT: 1.00 MPH
JOINT FREQUENCY DISTRIBUTION OF WIND SPEED AND DIRECTION IN HOURS AT 100.00 METERS

SPEED (MPH)	N	NNE	NE	ENE	E	ESE	SE	SSE	S	SSW	SW	WSW	W	WNW	NW	NNW	TOTAL
CALM																	0
1.01- 3.50	0	0	0	0	0	0	0	0	0	0	0	0	0	0	0	0	0
3.51- 7.50	0	0	0	0	1	0	0	1	0	0	0	0	0	0	0	0	2
7.51-12.50	0	0	0	0	0	0	1	4	12	3	0	0	1	0	0	0	21
12.51-18.50	0	0	0	0	0	0	8	3	19	6	0	0	0	0	0	0	36
18.51-24.00	0	0	0	0	0	0	0	0	11	0	0	0	0	0	0	0	11
>24.00	0	0	0	0	0	0	0	0	1	0	0	0	0	0	1	0	2
TOTAL	0	0	0	0	1	0	9	8	43	9	0	0	1	0	1	0	72

PROGRAM: JFD VERSION: PC-1.2
NPPD-COOPER NUCLEAR STATION JFD:100M WIND VS 10M DELTA T JUL-SEP 2012
SITE IDENTIFIER: NPPD
DATA PERIOD EXAMINED: 7/ 1/12 - 9/30/12

*** JUL-SEP 2012 ***

STABILITY CLASS C

STABILITY BASED ON: DELTA T BETWEEN 100.0 AND 10.0 METERS
WIND MEASURED AT: 100.0 METERS
WIND THRESHOLD AT: 1.00 MPH
JOINT FREQUENCY DISTRIBUTION OF WIND SPEED AND DIRECTION IN HOURS AT 100.00 METERS

SPEED (MPH)	N	NNE	NE	ENE	E	ESE	SE	SSE	S	SSW	SW	WSW	W	WNW	NW	NNW	TOTAL
CALM																	0
1.01- 3.50	0	0	0	0	0	0	0	0	0	0	0	0	0	0	0	0	0
3.51- 7.50	0	1	2	2	3	3	2	2	2	0	0	0	0	0	0	0	17
7.51-12.50	6	0	0	2	0	6	5	12	13	34	3	0	0	2	0	0	83
12.51-18.50	6	2	0	0	0	0	13	3	9	4	0	0	0	6	1	1	45
18.51-24.00	0	0	0	0	0	0	0	0	4	0	0	0	0	0	0	1	5
>24.00	0	0	0	0	0	0	0	0	1	0	0	0	0	0	2	0	3
TOTAL	12	3	2	4	3	9	20	17	29	38	3	0	0	8	3	2	153

STABILITY CLASS D

STABILITY BASED ON: DELTA T BETWEEN 100.0 AND 10.0 METERS
WIND MEASURED AT: 100.0 METERS
WIND THRESHOLD AT: 1.00 MPH
JOINT FREQUENCY DISTRIBUTION OF WIND SPEED AND DIRECTION IN HOURS AT 100.00 METERS

SPEED (MPH)	N	NNE	NE	ENE	E	ESE	SE	SSE	S	SSW	SW	WSW	W	WNW	NW	NNW	TOTAL
CALM																	0
1.01- 3.50	2	3	2	3	3	2	1	1	1	2	0	0	1	2	0	1	24
3.51- 7.50	24	22	13	21	12	23	25	21	20	12	6	4	6	1	3	6	219
7.51-12.50	57	28	19	3	6	12	29	23	15	47	20	3	0	7	3	8	280
12.51-18.50	49	13	4	2	0	4	14	18	27	9	3	0	0	0	11	23	177
18.51-24.00	6	4	0	0	0	0	4	1	3	0	0	0	0	0	5	17	40
>24.00	3	4	0	0	0	0	0	0	2	0	0	0	0	0	0	6	15
TOTAL	141	74	38	29	21	41	73	64	68	70	29	7	7	10	22	61	755

PROGRAM: JFD VERSION: PC-1.2
NPPD-COOPER NUCLEAR STATION JFD:100M WIND VS 10M DELTA T JUL-SEP 2012
SITE IDENTIFIER: NPPD
DATA PERIOD EXAMINED: 7/ 1/12 - 9/30/12

*** JUL-SEP 2012 ***

STABILITY CLASS E

STABILITY BASED ON: DELTA T BETWEEN 100.0 AND 10.0 METERS
WIND MEASURED AT: 100.0 METERS
WIND THRESHOLD AT: 1.00 MPH
JOINT FREQUENCY DISTRIBUTION OF WIND SPEED AND DIRECTION IN HOURS AT 100.00 METERS

SPEED (MPH)	N	NNE	NE	ENE	E	ESE	SE	SSE	S	SSW	SW	WSW	W	WNW	NW	NNW	TOTAL
CALM																	0
1.01- 3.50	1	0	1	1	2	0	1	0	0	0	1	0	1	0	0	0	8
3.51- 7.50	5	2	6	8	3	11	2	3	2	3	5	1	2	0	4	4	61
7.51-12.50	16	19	19	5	9	15	8	30	31	34	4	1	1	3	2	8	205
12.51-18.50	29	32	8	2	4	6	18	32	50	16	8	2	1	0	1	19	228
18.51-24.00	10	4	0	1	0	3	7	13	24	0	0	0	0	0	3	3	68
>24.00	1	1	0	0	0	0	2	5	4	0	1	0	0	1	1	1	17
TOTAL	62	58	34	17	18	35	38	83	111	53	19	4	5	4	11	35	587

STABILITY CLASS F

STABILITY BASED ON: DELTA T BETWEEN 100.0 AND 10.0 METERS
WIND MEASURED AT: 100.0 METERS
WIND THRESHOLD AT: 1.00 MPH

JOINT FREQUENCY DISTRIBUTION OF WIND SPEED AND DIRECTION IN HOURS AT 100.00 METERS

SPEED (MPH)	N	NNE	NE	ENE	E	ESE	SE	SSE	S	SSW	SW	WSW	W	WNW	NW	NNW	TOTAL
CALM																	0
1.01- 3.50	0	0	0	0	0	0	0	1	1	2	1	0	0	0	0	0	5
3.51- 7.50	4	3	6	14	5	4	3	8	8	1	5	1	1	2	3	4	72
7.51-12.50	11	9	11	11	7	4	14	19	25	23	5	1	0	2	1	6	149
12.51-18.50	4	7	3	1	1	3	8	22	36	15	4	2	2	1	2	11	122
18.51-24.00	0	0	0	0	0	0	1	1	9	0	2	1	1	0	0	1	16
>24.00	0	0	0	0	0	0	0	0	0	0	0	0	0	0	1	0	1
TOTAL	19	19	20	26	13	11	26	51	79	41	17	5	4	5	7	22	365

PROGRAM: JFD VERSION: PC-1.2
NPPD-COOPER NUCLEAR STATION JFD:100M WIND VS 10M DELTA T JUL-SEP 2012
SITE IDENTIFIER: NPPD
DATA PERIOD EXAMINED: 7/ 1/12 - 9/30/12

*** JUL-SEP 2012 ***

STABILITY CLASS G

STABILITY BASED ON: DELTA T BETWEEN 100.0 AND 10.0 METERS
WIND MEASURED AT: 100.0 METERS
WIND THRESHOLD AT: 1.00 MPH
JOINT FREQUENCY DISTRIBUTION OF WIND SPEED AND DIRECTION IN HOURS AT 100.00 METERS

SPEED (MPH)	N	NNE	NE	ENE	E	ESE	SE	SSE	S	SSW	SW	WSW	W	WNW	NW	NNW	TOTAL
CALM																	0
1.01- 3.50	1	1	1	1	2	1	1	1	0	6	0	0	2	0	1	1	19
3.51- 7.50	3	4	5	8	6	9	7	6	6	7	1	2	4	5	6	7	86
7.51-12.50	13	8	2	2	0	2	17	22	9	7	5	1	7	2	6	10	113
12.51-18.50	0	0	0	0	0	1	2	16	2	6	2	1	2	1	1	0	34
18.51-24.00	0	0	0	0	0	0	0	0	0	0	0	1	0	0	0	0	1
>24.00	0	0	0	0	0	0	0	0	0	0	0	0	0	0	0	0	0
TOTAL	17	13	8	11	8	13	27	45	17	26	8	5	15	8	14	18	253

STABILITY CLASS ALL

STABILITY BASED ON: DELTA T BETWEEN 100.0 AND 10.0 METERS
WIND MEASURED AT: 100.0 METERS
WIND THRESHOLD AT: 1.00 MPH
JOINT FREQUENCY DISTRIBUTION OF WIND SPEED AND DIRECTION IN HOURS AT 100.00 METERS

SPEED (MPH)	N	NNE	NE	ENE	E	ESE	SE	SSE	S	SSW	SW	WSW	W	WNW	NW	NNW	TOTAL
CALM																	0
1.01- 3.50	4	4	4	5	7	3	3	3	2	10	2	0	4	2	1	2	56
3.51- 7.50	36	32	32	53	30	50	39	41	38	23	17	8	13	8	16	21	457
7.51-12.50	103	64	51	23	22	39	74	110	105	148	37	6	9	16	12	32	851
12.51-18.50	88	54	15	5	5	14	64	99	152	57	17	5	5	8	16	54	658
18.51-24.00	16	8	0	1	0	3	12	15	57	0	2	2	1	0	8	22	147
>24.00	4	5	0	0	0	0	2	5	9	0	1	0	0	1	5	7	39
TOTAL	251	167	102	87	64	109	194	273	363	238	76	21	32	35	58	138	2208

PROGRAM: JFD VERSION: PC-1.2
NPPD-COOPER NUCLEAR STATION JFD:100M WIND VS 10M DELTA T JUL-SEP 2012
SITE IDENTIFIER: NPPD
DATA PERIOD EXAMINED: 7/ 1/12 - 9/30/12

*** JUL-SEP 2012 ***

STABILITY BASED ON: DELTA T BETWEEN 100.0 AND 10.0 METERS
WIND MEASURED AT: 100.0 METERS
WIND THRESHOLD AT: 1.00 MPH

TOTAL NUMBER OF OBSERVATIONS: 2208

TOTAL NUMBER OF VALID OBSERVATIONS: 2208

TOTAL NUMBER OF MISSING OBSERVATIONS: 0

PERCENT DATA RECOVERY FOR THIS PERIOD: 100.0 %

MEAN WIND SPEED FOR THIS PERIOD: 11.5 MPH

TOTAL NUMBER OF OBSERVATIONS WITH BACKUP DATA: 0

PERCENTAGE OCCURRENCE OF STABILITY CLASSES

A	B	C	D	E	F	G
1.04	3.26	6.93	34.19	26.59	16.53	11.46

DISTRIBUTION OF WIND DIRECTION VS STABILITY

	N	NNE	NE	ENE	E	ESE	SE	SSE	S	SSW	SW	WSW	W	WNW	NW	NNW	CALM
A	0	0	0	0	0	0	1	5	16	1	0	0	0	0	0	0	0
B	0	0	0	0	1	0	9	8	43	9	0	0	1	0	1	0	0
C	12	3	2	4	3	9	20	17	29	38	3	0	0	8	3	2	0
D	141	74	38	29	21	41	73	64	68	70	29	7	7	10	22	61	0
E	62	58	34	17	18	35	38	83	111	53	19	4	5	4	11	35	0
F	19	19	20	26	13	11	26	51	79	41	17	5	4	5	7	22	0
G	17	13	8	11	8	13	27	45	17	26	8	5	15	8	14	18	0
TOTAL	251	167	102	87	64	109	194	273	363	238	76	21	32	35	58	138	0

JFDs of 100-Meter Wind vs. Delta T

October-December 2012

PROGRAM: JFD VERSION: PC-1.2
NPPD-COOPER NUCLEAR STATION JFD:100M WIND VS 10M DELTA T OCT-DEC 2012
SITE IDENTIFIER: NPPD
DATA PERIOD EXAMINED: 10/ 1/12 - 12/31/12

*** OCT-DEC 2012 ***

STABILITY CLASS A

STABILITY BASED ON: DELTA T BETWEEN 100.0 AND 10.0 METERS
WIND MEASURED AT: 100.0 METERS
WIND THRESHOLD AT: 1.00 MPH
JOINT FREQUENCY DISTRIBUTION OF WIND SPEED AND DIRECTION IN HOURS AT 100.00 METERS

SPEED (MPH)	N	NNE	NE	ENE	E	ESE	SE	SSE	S	SSW	SW	WSW	W	WNW	NW	NNW	TOTAL
CALM																	0
1.01- 3.50	0	0	0	0	0	0	0	0	0	0	0	0	0	0	0	0	0
3.51- 7.50	0	0	0	0	0	0	0	0	0	0	0	0	0	0	0	0	0
7.51-12.50	0	0	0	0	0	0	0	0	0	0	0	0	0	0	0	0	0
12.51-18.50	0	0	0	0	0	0	0	0	0	0	0	0	0	0	0	0	0
18.51-24.00	0	0	0	0	0	0	0	0	0	0	0	0	0	0	0	0	0
>24.00	0	0	0	0	0	0	0	0	0	0	0	0	0	0	0	0	0
TOTAL	0	0	0	0	0	0	0	0	0	0	0	0	0	0	0	0	0

STABILITY CLASS B

STABILITY BASED ON: DELTA T BETWEEN 100.0 AND 10.0 METERS
WIND MEASURED AT: 100.0 METERS
WIND THRESHOLD AT: 1.00 MPH
JOINT FREQUENCY DISTRIBUTION OF WIND SPEED AND DIRECTION IN HOURS AT 100.00 METERS

SPEED (MPH)	N	NNE	NE	ENE	E	ESE	SE	SSE	S	SSW	SW	WSW	W	WNW	NW	NNW	TOTAL
CALM																	0
1.01- 3.50	0	0	0	0	0	0	0	0	0	0	0	0	0	0	0	0	0
3.51- 7.50	0	0	0	0	0	0	0	0	0	0	0	0	0	0	0	0	0
7.51-12.50	0	0	0	0	0	0	0	0	0	0	0	0	0	0	0	0	0
12.51-18.50	0	0	0	0	0	0	0	0	0	2	0	0	0	0	0	0	2
18.51-24.00	0	0	0	0	0	0	0	0	4	0	0	0	0	0	0	0	4
>24.00	0	0	0	0	0	0	0	0	0	0	0	0	0	0	0	0	0
TOTAL	0	0	0	0	0	0	0	0	4	2	0	0	0	0	0	0	6

PROGRAM: JFD VERSION: PC-1.2
NPPD-COOPER NUCLEAR STATION JFD:100M WIND VS 10M DELTA T OCT-DEC 2012
SITE IDENTIFIER: NPPD
DATA PERIOD EXAMINED: 10/ 1/12 -12/31/12

*** OCT-DEC 2012 ***

STABILITY CLASS C

STABILITY BASED ON: DELTA T BETWEEN 100.0 AND 10.0 METERS
WIND MEASURED AT: 100.0 METERS
WIND THRESHOLD AT: 1.00 MPH
JOINT FREQUENCY DISTRIBUTION OF WIND SPEED AND DIRECTION IN HOURS AT 100.00 METERS

SPEED (MPH)	N	NNE	NE	ENE	E	ESE	SE	SSE	S	SSW	SW	WSW	W	WNW	NW	NNW	TOTAL
CALM																	0
1.01- 3.50	0	0	0	0	0	0	0	0	0	0	0	0	0	0	0	0	0
3.51- 7.50	0	0	0	0	0	0	0	0	0	0	0	0	0	0	0	0	0
7.51-12.50	0	0	0	0	1	0	0	1	0	0	0	0	1	0	0	0	3
12.51-18.50	2	0	0	0	2	1	0	4	5	4	0	1	0	0	0	2	21
18.51-24.00	1	0	0	0	0	0	0	3	4	0	0	0	0	0	0	0	8
>24.00	2	0	0	0	0	0	0	0	2	2	0	0	0	0	1	0	7
TOTAL	5	0	0	0	3	1	0	8	11	6	0	1	1	0	1	2	39

STABILITY CLASS D

STABILITY BASED ON: DELTA T BETWEEN 100.0 AND 10.0 METERS
WIND MEASURED AT: 100.0 METERS
WIND THRESHOLD AT: 1.00 MPH
JOINT FREQUENCY DISTRIBUTION OF WIND SPEED AND DIRECTION IN HOURS AT 100.00 METERS

SPEED (MPH)	N	NNE	NE	ENE	E	ESE	SE	SSE	S	SSW	SW	WSW	W	WNW	NW	NNW	TOTAL
CALM																	0
1.01- 3.50	0	0	1	2	3	2	2	0	0	4	2	3	0	1	2	2	24
3.51- 7.50	10	4	4	1	4	12	13	6	4	6	7	10	9	0	9	18	117
7.51-12.50	18	9	3	10	8	17	20	22	21	18	10	14	12	9	21	50	262
12.51-18.50	35	28	3	6	7	12	16	32	19	19	8	13	10	25	42	45	320
18.51-24.00	18	20	5	4	1	1	3	24	26	5	2	3	1	8	43	27	191
>24.00	12	4	0	0	0	0	0	4	30	6	0	0	2	21	59	10	148
TOTAL	93	65	16	23	23	44	54	88	100	58	29	43	34	64	176	152	1062

PROGRAM: JFD VERSION: PC-1.2
NPPD-COOPER NUCLEAR STATION JFD:100M WIND VS 10M DELTA T OCT-DEC 2012
SITE IDENTIFIER: NPPD
DATA PERIOD EXAMINED: 10/ 1/12 -12/31/12

*** OCT-DEC 2012 ***

STABILITY CLASS E

STABILITY BASED ON: DELTA T BETWEEN 100.0 AND 10.0 METERS
WIND MEASURED AT: 100.0 METERS
WIND THRESHOLD AT: 1.00 MPH
JOINT FREQUENCY DISTRIBUTION OF WIND SPEED AND DIRECTION IN HOURS AT 100.00 METERS

SPEED (MPH)	N	NNE	NE	ENE	E	ESE	SE	SSE	S	SSW	SW	WSW	W	WNW	NW	NNW	TOTAL
CALM																	0
1.01- 3.50	0	0	0	0	0	1	0	0	1	1	1	1	0	1	0	0	6
3.51- 7.50	2	2	2	1	3	3	1	2	5	3	4	3	0	2	3	5	41
7.51-12.50	7	13	4	5	3	8	7	15	5	16	2	2	4	5	4	10	110
12.51-18.50	11	25	3	1	3	18	37	40	42	20	12	2	4	8	15	43	284
18.51-24.00	1	4	0	1	0	0	7	19	54	6	6	5	4	6	9	10	132
>24.00	0	0	0	0	0	0	1	8	20	2	0	0	6	10	2	1	50
TOTAL	21	44	9	8	9	30	53	84	127	48	25	13	18	32	33	69	623

STABILITY CLASS F

STABILITY BASED ON: DELTA T BETWEEN 100.0 AND 10.0 METERS
WIND MEASURED AT: 100.0 METERS
WIND THRESHOLD AT: 1.00 MPH
JOINT FREQUENCY DISTRIBUTION OF WIND SPEED AND DIRECTION IN HOURS AT 100.00 METERS

SPEED (MPH)	N	NNE	NE	ENE	E	ESE	SE	SSE	S	SSW	SW	WSW	W	WNW	NW	NNW	TOTAL
CALM																	0
1.01- 3.50	0	0	1	1	1	1	2	0	2	0	1	1	0	0	0	1	11
3.51- 7.50	6	2	2	2	2	4	4	4	6	5	1	2	2	2	3	2	49
7.51-12.50	2	3	2	1	2	1	7	14	10	6	1	3	3	4	6	11	76
12.51-18.50	1	2	0	1	0	3	17	34	15	8	4	1	5	1	9	12	113
18.51-24.00	0	0	0	0	0	0	3	3	15	6	2	3	4	1	7	1	45
>24.00	0	0	0	0	0	0	0	0	1	1	0	1	0	0	2	0	5
TOTAL	9	7	5	5	5	9	33	55	49	26	9	11	14	8	27	27	299

PROGRAM: JFD VERSION: PC-1.2
NPPD-COOPER NUCLEAR STATION JFD:100M WIND VS 10M DELTA T OCT-DEC 2012
SITE IDENTIFIER: NPPD
DATA PERIOD EXAMINED: 10/ 1/12 - 12/31/12

*** OCT-DEC 2012 ***

STABILITY CLASS G

STABILITY BASED ON: DELTA T BETWEEN 100.0 AND 10.0 METERS
WIND MEASURED AT: 100.0 METERS
WIND THRESHOLD AT: 1.00 MPH
JOINT FREQUENCY DISTRIBUTION OF WIND SPEED AND DIRECTION IN HOURS AT 100.00 METERS

SPEED (MPH)	N	NNE	NE	ENE	E	ESE	SE	SSE	S	SSW	SW	WSW	W	WNW	NW	NNW	TOTAL
CALM																	0
1.01- 3.50	0	0	4	2	0	0	0	0	0	0	0	0	0	0	0	1	7
3.51- 7.50	4	4	1	3	2	6	1	2	5	5	4	1	1	5	3	5	52
7.51-12.50	4	0	5	0	0	4	1	6	10	9	8	6	5	4	5	7	74
12.51-18.50	2	0	0	0	0	0	0	8	6	5	2	1	3	7	2	3	39
18.51-24.00	0	0	0	0	0	0	0	0	2	1	1	0	0	0	1	0	5
>24.00	0	0	0	0	0	0	0	0	0	0	0	0	0	0	0	0	0
TOTAL	10	4	10	5	2	10	2	16	23	20	15	8	9	16	11	16	177

STABILITY CLASS ALL

STABILITY BASED ON: DELTA T BETWEEN 100.0 AND 10.0 METERS
WIND MEASURED AT: 100.0 METERS
WIND THRESHOLD AT: 1.00 MPH
JOINT FREQUENCY DISTRIBUTION OF WIND SPEED AND DIRECTION IN HOURS AT 100.00 METERS

SPEED (MPH)	N	NNE	NE	ENE	E	ESE	SE	SSE	S	SSW	SW	WSW	W	WNW	NW	NNW	TOTAL
CALM																	0
1.01- 3.50	0	0	6	5	4	4	4	0	3	5	4	5	0	2	2	4	48
3.51- 7.50	22	12	9	7	11	25	19	14	20	19	16	16	12	9	18	30	259
7.51-12.50	31	25	14	16	14	30	35	58	46	49	21	25	25	22	36	78	525
12.51-18.50	51	55	6	8	12	34	70	118	87	58	26	18	22	41	68	105	779
18.51-24.00	20	24	5	5	1	1	13	49	105	18	11	11	9	15	60	38	385
>24.00	14	4	0	0	0	0	1	12	53	11	0	1	8	31	64	11	210
TOTAL	138	120	40	41	42	94	142	251	314	160	78	76	76	120	248	266	2206

PROGRAM: JFD VERSION: PC-1.2
NPPD-COOPER NUCLEAR STATION JFD:100M WIND VS 10M DELTA T OCT-DEC 2012
SITE IDENTIFIER: NPPD
DATA PERIOD EXAMINED: 10/ 1/12 -12/31/12

*** OCT-DEC 2012 ***

STABILITY BASED ON: DELTA T BETWEEN 100.0 AND 10.0 METERS
WIND MEASURED AT: 100.0 METERS
WIND THRESHOLD AT: 1.00 MPH

TOTAL NUMBER OF OBSERVATIONS: 2208

TOTAL NUMBER OF VALID OBSERVATIONS: 2206

TOTAL NUMBER OF MISSING OBSERVATIONS: 2

PERCENT DATA RECOVERY FOR THIS PERIOD: 99.9 %

MEAN WIND SPEED FOR THIS PERIOD: 14.9 MPH

TOTAL NUMBER OF OBSERVATIONS WITH BACKUP DATA: 0

PERCENTAGE OCCURRENCE OF STABILITY CLASSES

A	B	C	D	E	F	G
.00	.27	1.77	48.14	28.24	13.55	8.02

DISTRIBUTION OF WIND DIRECTION VS STABILITY

	N	NNE	NE	ENE	E	ESE	SE	SSE	S	SSW	SW	WSW	W	WNW	NW	NNW	CALM
A	0	0	0	0	0	0	0	0	0	0	0	0	0	0	0	0	0
B	0	0	0	0	0	0	0	0	4	2	0	0	0	0	0	0	0
C	5	0	0	0	3	1	0	8	11	6	0	1	1	0	1	2	0
D	93	65	16	23	23	44	54	88	100	58	29	43	34	64	176	152	0
E	21	44	9	8	9	30	53	84	127	48	25	13	18	32	33	69	0
F	9	7	5	5	5	9	33	55	49	26	9	11	14	8	27	27	0
G	10	4	10	5	2	10	2	16	23	20	15	8	9	16	11	16	0
TOTAL	138	120	40	41	42	94	142	251	314	160	78	76	76	120	248	266	0

JFDs of 100-Meter Wind vs. Delta T

July-December 2012

PROGRAM: JFD VERSION: PC-1.2
NPPD-COOPER NUCLEAR STATION JFD:100M WIND VS 10M DELTA T JUL-DEC 2012
SITE IDENTIFIER: NPPD
DATA PERIOD EXAMINED: 7/ 1/12 -12/31/12

*** JUL-DEC 2012 ***

STABILITY CLASS A

STABILITY BASED ON: DELTA T BETWEEN 100.0 AND 10.0 METERS
WIND MEASURED AT: 100.0 METERS
WIND THRESHOLD AT: 1.00 MPH
JOINT FREQUENCY DISTRIBUTION OF WIND SPEED AND DIRECTION IN HOURS AT 100.00 METERS

SPEED (MPH)	N	NNE	NE	ENE	E	ESE	SE	SSE	S	SSW	SW	WSW	W	WNW	NW	NNW	TOTAL
CALM																	0
1.01- 3.50	0	0	0	0	0	0	0	0	0	0	0	0	0	0	0	0	0
3.51- 7.50	0	0	0	0	0	0	0	0	0	0	0	0	0	0	0	0	0
7.51-12.50	0	0	0	0	0	0	0	0	0	0	0	0	0	0	0	0	0
12.51-18.50	0	0	0	0	0	0	1	5	9	1	0	0	0	0	0	0	16
18.51-24.00	0	0	0	0	0	0	0	0	6	0	0	0	0	0	0	0	6
>24.00	0	0	0	0	0	0	0	0	1	0	0	0	0	0	0	0	1
TOTAL	0	0	0	0	0	0	1	5	16	1	0	0	0	0	0	0	23

STABILITY CLASS B

STABILITY BASED ON: DELTA T BETWEEN 100.0 AND 10.0 METERS
WIND MEASURED AT: 100.0 METERS
WIND THRESHOLD AT: 1.00 MPH
JOINT FREQUENCY DISTRIBUTION OF WIND SPEED AND DIRECTION IN HOURS AT 100.00 METERS

SPEED (MPH)	N	NNE	NE	ENE	E	ESE	SE	SSE	S	SSW	SW	WSW	W	WNW	NW	NNW	TOTAL
CALM																	0
1.01- 3.50	0	0	0	0	0	0	0	0	0	0	0	0	0	0	0	0	0
3.51- 7.50	0	0	0	0	1	0	0	1	0	0	0	0	0	0	0	0	2
7.51-12.50	0	0	0	0	0	0	1	4	12	3	0	0	1	0	0	0	21
12.51-18.50	0	0	0	0	0	0	8	3	19	8	0	0	0	0	0	0	38
18.51-24.00	0	0	0	0	0	0	0	0	15	0	0	0	0	0	0	0	15
>24.00	0	0	0	0	0	0	0	0	1	0	0	0	0	0	1	0	2
TOTAL	0	0	0	0	1	0	9	8	47	11	0	0	1	0	1	0	78

PROGRAM: JFD VERSION: PC-1.2
NPPD-COOPER NUCLEAR STATION JFD:100M WIND VS 10M DELTA T JUL-DEC 2012
SITE IDENTIFIER: NPPD
DATA PERIOD EXAMINED: 7/ 1/12 -12/31/12

*** JUL-DEC 2012 ***

STABILITY CLASS C

STABILITY BASED ON: DELTA T BETWEEN 100.0 AND 10.0 METERS
WIND MEASURED AT: 100.0 METERS
WIND THRESHOLD AT: 1.00 MPH
JOINT FREQUENCY DISTRIBUTION OF WIND SPEED AND DIRECTION IN HOURS AT 100.00 METERS

SPEED (MPH)	N	NNE	NE	ENE	E	ESE	SE	SSE	S	SSW	SW	WSW	W	WNW	NW	NNW	TOTAL
CALM																	0
1.01- 3.50	0	0	0	0	0	0	0	0	0	0	0	0	0	0	0	0	0
3.51- 7.50	0	1	2	2	3	3	2	2	2	0	0	0	0	0	0	0	17
7.51-12.50	6	0	0	2	1	6	5	13	13	34	3	0	1	2	0	0	86
12.51-18.50	8	2	0	0	2	1	13	7	14	8	0	1	0	6	1	3	66
18.51-24.00	1	0	0	0	0	0	0	3	8	0	0	0	0	0	0	1	13
>24.00	2	0	0	0	0	0	0	0	3	2	0	0	0	0	3	0	10
TOTAL	17	3	2	4	6	10	20	25	40	44	3	1	1	8	4	4	192

STABILITY CLASS D

STABILITY BASED ON: DELTA T BETWEEN 100.0 AND 10.0 METERS
WIND MEASURED AT: 100.0 METERS
WIND THRESHOLD AT: 1.00 MPH
JOINT FREQUENCY DISTRIBUTION OF WIND SPEED AND DIRECTION IN HOURS AT 100.00 METERS

SPEED (MPH)	N	NNE	NE	ENE	E	ESE	SE	SSE	S	SSW	SW	WSW	W	WNW	NW	NNW	TOTAL
CALM																	0
1.01- 3.50	2	3	3	5	6	4	3	1	1	6	2	3	1	3	2	3	48
3.51- 7.50	34	26	17	22	16	35	38	27	24	18	13	14	15	1	12	24	336
7.51-12.50	75	37	22	13	14	29	49	45	36	65	30	17	12	16	24	58	542
12.51-18.50	84	41	7	8	7	16	30	50	46	28	11	13	10	25	53	68	497
18.51-24.00	24	24	5	4	1	1	7	25	29	5	2	3	1	8	48	44	231
>24.00	15	8	0	0	0	0	0	4	32	6	0	0	2	21	59	16	163
TOTAL	234	139	54	52	44	85	127	152	168	128	58	50	41	74	198	213	1817

PROGRAM: JFD VERSION: PC-1.2
NPPD-COOPER NUCLEAR STATION JFD:100M WIND VS 10M DELTA T JUL-DEC 2012
SITE IDENTIFIER: NPPD
DATA PERIOD EXAMINED: 7/ 1/12 -12/31/12

*** JUL-DEC 2012 ***

STABILITY CLASS E

STABILITY BASED ON: DELTA T BETWEEN 100.0 AND 10.0 METERS
WIND MEASURED AT: 100.0 METERS
WIND THRESHOLD AT: 1.00 MPH
JOINT FREQUENCY DISTRIBUTION OF WIND SPEED AND DIRECTION IN HOURS AT 100.00 METERS

SPEED (MPH)	N	NNE	NE	ENE	E	ESE	SE	SSE	S	SSW	SW	WSW	W	WNW	NW	NNW	TOTAL
CALM																	0
1.01- 3.50	1	0	1	1	2	1	1	0	1	1	2	1	1	1	0	0	14
3.51- 7.50	7	4	8	9	6	14	3	5	7	6	9	4	2	2	7	9	102
7.51-12.50	23	32	23	10	12	23	15	45	36	50	6	3	5	8	6	18	315
12.51-18.50	40	57	11	3	7	24	55	72	92	36	20	4	5	8	16	62	512
18.51-24.00	11	8	0	2	0	3	14	32	78	6	6	5	4	6	12	13	200
>24.00	1	1	0	0	0	0	3	13	24	2	1	0	6	11	3	2	67
TOTAL	83	102	43	25	27	65	91	167	238	101	44	17	23	36	44	104	1210

STABILITY CLASS F

STABILITY BASED ON: DELTA T BETWEEN 100.0 AND 10.0 METERS
WIND MEASURED AT: 100.0 METERS
WIND THRESHOLD AT: 1.00 MPH
JOINT FREQUENCY DISTRIBUTION OF WIND SPEED AND DIRECTION IN HOURS AT 100.00 METERS

SPEED (MPH)	N	NNE	NE	ENE	E	ESE	SE	SSE	S	SSW	SW	WSW	W	WNW	NW	NNW	TOTAL
CALM																	0
1.01- 3.50	0	0	1	1	1	1	2	1	3	2	2	1	0	0	0	1	16
3.51- 7.50	10	5	8	16	7	8	7	12	14	6	6	3	3	4	6	6	121
7.51-12.50	13	12	13	12	9	5	21	33	35	29	6	4	3	6	7	17	225
12.51-18.50	5	9	3	2	1	6	25	56	51	23	8	3	7	2	11	23	235
18.51-24.00	0	0	0	0	0	0	4	4	24	6	4	4	5	1	7	2	61
>24.00	0	0	0	0	0	0	0	0	1	1	0	1	0	0	3	0	6
TOTAL	28	26	25	31	18	20	59	106	128	67	26	16	18	13	34	49	664

PROGRAM: JFD VERSION: PC-1.2
NPPD-COOPER NUCLEAR STATION JFD:100M WIND VS 10M DELTA T JUL-DEC 2012
SITE IDENTIFIER: NPPD
DATA PERIOD EXAMINED: 7/ 1/12 -12/31/12

*** JUL-DEC 2012 ***

STABILITY CLASS G

STABILITY BASED ON: DELTA T BETWEEN 100.0 AND 10.0 METERS
WIND MEASURED AT: 100.0 METERS
WIND THRESHOLD AT: 1.00 MPH
JOINT FREQUENCY DISTRIBUTION OF WIND SPEED AND DIRECTION IN HOURS AT 100.00 METERS

SPEED (MPH)	N	NNE	NE	ENE	E	ESE	SE	SSE	S	SSW	SW	WSW	W	WNW	NW	NNW	TOTAL
CALM																	0
1.01- 3.50	1	1	5	3	2	1	1	1	0	6	0	0	2	0	1	2	26
3.51- 7.50	7	8	6	11	8	15	8	8	11	12	5	3	5	10	9	12	138
7.51-12.50	17	8	7	2	0	6	18	28	19	16	13	7	12	6	11	17	187
12.51-18.50	2	0	0	0	0	1	2	24	8	11	4	2	5	8	3	3	73
18.51-24.00	0	0	0	0	0	0	0	0	2	1	1	1	0	0	1	0	6
>24.00	0	0	0	0	0	0	0	0	0	0	0	0	0	0	0	0	0
TOTAL	27	17	18	16	10	23	29	61	40	46	23	13	24	24	25	34	430

STABILITY CLASS ALL

STABILITY BASED ON: DELTA T BETWEEN 100.0 AND 10.0 METERS
WIND MEASURED AT: 100.0 METERS
WIND THRESHOLD AT: 1.00 MPH
JOINT FREQUENCY DISTRIBUTION OF WIND SPEED AND DIRECTION IN HOURS AT 100.00 METERS

SPEED (MPH)	N	NNE	NE	ENE	E	ESE	SE	SSE	S	SSW	SW	WSW	W	WNW	NW	NNW	TOTAL
CALM																	0
1.01- 3.50	4	4	10	10	11	7	7	3	5	15	6	5	4	4	3	6	104
3.51- 7.50	58	44	41	60	41	75	58	55	58	42	33	24	25	17	34	51	716
7.51-12.50	134	89	65	39	36	69	109	168	151	197	58	31	34	38	48	110	1376
12.51-18.50	139	109	21	13	17	48	134	217	239	115	43	23	27	49	84	159	1437
18.51-24.00	36	32	5	6	1	4	25	64	162	18	13	13	10	15	68	60	532
>24.00	18	9	0	0	0	0	3	17	62	11	1	1	8	32	69	18	249
TOTAL	389	287	142	128	106	203	336	524	677	398	154	97	108	155	306	404	4414

PROGRAM: JFD VERSION: PC-1.2
NPPD-COOPER NUCLEAR STATION JFD:100M WIND VS 10M DELTA T JUL-DEC 2012
SITE IDENTIFIER: NPPD
DATA PERIOD EXAMINED: 7/ 1/12 -12/31/12

*** JUL-DEC 2012 ***

STABILITY BASED ON: DELTA T BETWEEN 100.0 AND 10.0 METERS
WIND MEASURED AT: 100.0 METERS
WIND THRESHOLD AT: 1.00 MPH

TOTAL NUMBER OF OBSERVATIONS: 4416

TOTAL NUMBER OF VALID OBSERVATIONS: 4414

TOTAL NUMBER OF MISSING OBSERVATIONS: 2

PERCENT DATA RECOVERY FOR THIS PERIOD: 100.0 %

MEAN WIND SPEED FOR THIS PERIOD: 13.2 MPH

TOTAL NUMBER OF OBSERVATIONS WITH BACKUP DATA: 0

PERCENTAGE OCCURRENCE OF STABILITY CLASSES

A	B	C	D	E	F	G
.52	1.77	4.35	41.16	27.41	15.04	9.74

DISTRIBUTION OF WIND DIRECTION VS STABILITY

	N	NNE	NE	ENE	E	ESE	SE	SSE	S	SSW	SW	WSW	W	WNW	NW	NNW	CALM
A	0	0	0	0	0	0	1	5	16	1	0	0	0	0	0	0	0
B	0	0	0	0	1	0	9	8	47	11	0	0	1	0	1	0	0
C	17	3	2	4	6	10	20	25	40	44	3	1	1	8	4	4	0
D	234	139	54	52	44	85	127	152	168	128	58	50	41	74	198	213	0
E	83	102	43	25	27	65	91	167	238	101	44	17	23	36	44	104	0
F	28	26	25	31	18	20	59	106	128	67	26	16	18	13	34	49	0
G	27	17	18	16	10	23	29	61	40	46	23	13	24	24	25	34	0
TOTAL	389	287	142	128	106	203	336	524	677	398	154	97	108	155	306	404	0

Stability Classes by Hour of Day

100-Meter Wind vs. Delta T

July-December 2012

PROGRAM: JFD VERSION: PC-1.2
NPPD-COOPER NUCLEAR STATION JFD:100M WIND VS 10M DELTA T JUL-DEC 2012
SITE IDENTIFIER: NPPD
DATA PERIOD EXAMINED: 7/ 1/12 - 12/31/12
STABILITY BASED ON: DELTA T BETWEEN 100.0 AND 10.0 METERS

HOURLY STABILITIES

YR	MN	DY	1	2	3	4	5	6	7	8	9	10	11	12	13	14	15	16	17	18	19	20	21	22	23	24
			HOURS																							
12	7	1	E	E	F	F	F	F	F	E	D	D	D	D	C	B	B	C	D	D	D	E	E	E	E	E
12	7	2	E	E	E	E	E	E	E	D	D	C	B	B	A	B	B	C	D	D	D	E	F	F	E	E
12	7	3	E	E	E	E	E	E	E	D	D	D	C	C	B	B	A	C	D	D	D	E	F	F	F	E
12	7	4	E	E	E	E	E	E	E	D	D	C	C	B	B	A	A	B	D	D	D	E	F	F	E	E
12	7	5	E	E	E	E	E	F	E	D	D	D	C	C	B	B	A	B	C	D	D	E	F	F	F	F
12	7	6	E	F	F	F	F	F	E	E	D	D	C	B	B	A	A	C	D	D	D	E	F	F	G	G
12	7	7	F	F	F	F	F	F	F	F	E	D	D	D	C	D	D	D	D	D	D	D	D	D	E	D
12	7	8	D	E	E	D	D	D	D	D	D	D	D	D	D	D	D	D	D	D	D	D	E	E	E	E
12	7	9	E	E	E	E	D	E	E	D	D	D	D	D	D	D	D	D	D	D	D	E	E	E	E	E
12	7	10	E	E	E	E	E	E	E	D	D	D	D	D	D	C	C	C	D	D	D	E	E	E	E	E
12	7	11	E	E	E	E	F	E	E	D	D	D	D	C	D	C	D	D	D	D	D	E	F	F	G	G
12	7	12	G	G	G	G	F	F	E	D	D	C	D	D	B	C	C	C	C	D	D	E	E	E	E	F
12	7	13	F	F	F	F	F	F	E	E	D	C	D	B	A	B	B	B	D	D	D	D	E	E	E	E
12	7	14	E	E	E	E	E	E	E	E	D	D	C	C	C	C	C	C	D	D	E	E	F	F	G	G
12	7	15	G	F	E	E	E	E	E	D	D	C	C	B	A	A	A	B	C	C	D	E	E	F	F	E
12	7	16	E	E	E	E	F	F	E	D	D	C	B	A	A	A	A	B	B	C	D	D	E	E	F	E
12	7	17	E	E	E	E	E	E	E	D	C	B	B	B	B	B	A	C	C	D	D	E	F	F	F	F
12	7	18	F	E	E	E	E	E	E	D	D	D	D	D	D	C	D	D	D	D	E	E	E	F	G	G
12	7	19	G	G	G	G	F	F	F	E	D	D	C	C	C	D	D	D	D	D	D	E	F	F	F	F
12	7	20	F	E	E	E	E	E	D	D	D	D	C	C	B	C	C	C	C	D	D	E	F	G	F	F
12	7	21	F	F	E	E	E	E	E	D	C	C	D	C	B	C	B	C	C	D	D	E	F	F	F	F
12	7	22	E	E	E	E	F	F	E	D	D	D	D	C	C	D	C	C	C	D	D	E	F	F	F	F
12	7	23	F	F	F	F	G	G	F	E	D	D	D	C	D	C	B	C	C	D	D	E	F	F	F	F
12	7	24	F	F	F	F	E	E	E	D	D	D	C	B	A	B	A	B	C	D	D	E	E	E	E	E
12	7	25	E	E	E	E	E	E	E	D	D	C	D	D	C	D	D	D	D	E	E	E	F	E	F	E
12	7	26	E	E	E	E	E	E	E	D	D	D	D	D	D	D	D	D	D	D	D	E	E	F	F	F
12	7	27	G	E	E	E	E	E	E	D	D	D	D	D	C	D	C	D	D	D	D	E	E	F	F	F
12	7	28	F	E	E	E	E	E	E	D	D	D	D	C	C	B	B	B	C	D	D	E	E	D	E	D
12	7	29	E	E	E	E	E	E	D	D	D	D	D	D	D	D	D	D	D	D	D	E	F	F	F	F
12	7	30	E	E	E	E	E	E	F	G	E	E	E	E	D	D	D	D	D	D	D	E	F	F	G	G
12	7	31	G	G	G	G	G	G	G	F	E	D	D	D	D	D	D	D	D	D	D	E	F	F	F	F
12	8	1	E	E	E	E	E	E	D	D	D	D	D	D	C	D	C	C	D	D	D	F	G	G	G	F
12	8	2	F	F	E	E	E	E	E	E	E	D	D	D	D	D	C	D	D	D	D	E	F	G	G	G
12	8	3	F	F	F	F	F	F	F	E	D	D	D	D	D	D	C	C	B	C	D	E	F	F	E	E
12	8	4	E	E	E	E	E	E	D	E	D	D	D	D	D	D	D	D	D	E	E	E	E	F	F	G
12	8	5	G	G	G	F	F	F	E	D	D	D	D	D	D	D	D	D	D	D	D	E	F	F	F	F
12	8	6	G	G	G	G	F	F	F	E	D	D	C	B	C	C	C	C	D	D	D	E	F	G	G	F
12	8	7	F	F	F	F	F	F	F	E	D	C	C	D	D	D	D	D	D	D	E	F	F	F	E	F
12	8	8	D	E	E	E	E	E	E	E	D	D	D	B	B	C	D	D	F	G	F	F	E	F	F	E
12	8	9	E	E	F	F	E	E	E	D	D	D	D	D	D	D	D	D	D	D	E	E	F	E	E	E
12	8	10	E	E	E	E	E	E	E	D	D	D	D	C	C	D	C	D	D	D	D	E	E	F	F	F
12	8	11	G	G	G	G	G	G	G	E	D	D	C	C	C	C	D	D	D	D	E	E	E	F	F	E
12	8	12	E	E	E	E	E	E	E	D	D	C	C	B	C	C	D	D	D	D	D	D	D	D	E	D
12	8	13	D	D	D	D	D	D	D	D	D	D	D	D	D	D	D	D	D	D	D	E	F	G	G	G

PROGRAM: JFD VERSION: PC-1.2
NPPD-COOPER NUCLEAR STATION JFD:100M WIND VS 10M DELTA T JUL-DEC 2012
SITE IDENTIFIER: NPPD
DATA PERIOD EXAMINED: 7/ 1/12 - 12/31/12
STABILITY BASED ON: DELTA T BETWEEN 100.0 AND 10.0 METERS

HOURLY STABILITIES

YR	MN	DY	1	2	3	4	5	6	7	8	9	10	11	12	13	14	15	16	17	18	19	20	21	22	23	24
			HOURS																							
12	8	14	G	G	G	F	G	F	F	F	E	D	D	C	B	C	C	C	C	C	D	D	E	E	E	E
12	8	15	E	E	E	E	E	E	E	D	D	C	B	B	A	B	A	B	C	D	D	E	F	F	E	E
12	8	16	F	F	E	D	D	D	D	D	D	D	D	D	D	D	D	D	D	D	E	E	F	F	G	G
12	8	17	G	G	G	G	G	G	G	E	D	D	D	D	D	D	D	D	D	D	D	E	F	G	G	G
12	8	18	G	G	G	G	G	G	G	F	D	D	D	D	D	D	D	D	E	D	D	D	D	D	E	E
12	8	19	E	E	E	E	E	E	E	D	D	D	D	C	C	C	D	D	D	D	D	E	F	G	G	G
12	8	20	G	G	G	G	G	G	G	F	D	D	D	D	D	C	D	D	D	D	E	F	F	F	G	F
12	8	21	E	E	E	F	F	F	E	D	D	D	D	D	D	D	D	D	D	D	E	F	G	G	G	F
12	8	22	F	G	G	G	G	G	F	F	D	D	C	B	A	B	B	D	D	D	E	F	F	F	F	G
12	8	23	F	G	F	F	F	F	F	E	D	C	C	B	B	B	D	D	D	D	E	E	E	E	E	E
12	8	24	E	E	E	D	D	D	D	D	D	D	D	C	C	D	D	D	D	D	D	E	E	E	E	E
12	8	25	E	E	E	D	E	D	D	D	E	E	E	E	E	E	E	E	E	E	E	E	E	E	E	E
12	8	26	E	F	F	F	F	F	F	F	F	F	E	D	D	D	D	D	D	D	E	F	F	G	G	G
12	8	27	G	F	F	F	F	G	G	F	E	D	D	D	D	D	D	D	D	D	E	F	G	G	G	G
12	8	28	G	G	G	G	G	G	G	F	E	D	D	C	C	D	C	D	D	D	E	F	F	F	G	G
12	8	29	F	F	F	F	F	F	G	F	E	D	D	B	C	C	C	D	D	D	E	F	F	G	G	G
12	8	30	F	F	F	F	F	F	F	E	D	D	D	C	C	D	C	C	D	D	E	G	G	G	G	G
12	8	31	G	G	G	G	G	G	G	F	E	D	D	D	D	D	D	D	D	D	D	E	E	E	E	E
12	9	1	E	E	E	E	E	E	E	D	D	D	D	D	D	D	D	D	D	D	D	E	E	E	E	E
12	9	2	E	E	E	E	F	F	F	E	D	D	D	D	D	D	D	D	D	D	D	F	F	F	E	E
12	9	3	E	E	F	F	F	F	F	E	D	D	D	D	D	D	D	D	D	E	E	E	E	E	D	E
12	9	4	E	E	E	E	E	E	E	E	D	D	D	D	D	D	C	B	C	D	E	E	E	E	E	F
12	9	5	G	G	F	F	F	G	G	F	D	D	D	D	D	D	D	D	D	E	E	F	F	F	F	F
12	9	6	F	F	F	F	F	F	G	F	D	D	D	C	B	B	B	C	C	D	D	E	E	E	E	E
12	9	7	E	E	E	E	E	E	E	D	D	D	D	D	E	E	D	D	D	D	E	E	F	F	F	E
12	9	8	E	E	F	F	G	G	F	E	D	D	C	C	C	C	C	C	D	D	E	G	G	G	F	E
12	9	9	E	E	E	E	E	E	E	D	D	D	D	D	D	D	D	D	D	D	D	F	F	G	G	G
12	9	10	F	F	F	F	F	F	F	E	D	C	B	B	B	B	A	B	C	D	E	E	E	E	E	E
12	9	11	E	E	E	E	E	E	E	E	D	C	B	B	B	B	A	C	D	D	E	E	E	E	E	E
12	9	12	E	E	E	D	D	D	E	E	E	D	D	D	D	D	D	D	D	D	D	D	D	D	D	D
12	9	13	E	E	E	E	E	E	E	E	E	E	D	D	D	D	D	D	D	D	E	F	F	F	F	F
12	9	14	G	G	F	G	G	G	G	G	F	E	D	D	D	D	D	D	D	D	E	F	F	G	G	G
12	9	15	G	G	G	G	G	G	G	F	E	D	D	D	C	C	C	D	D	D	E	E	E	E	E	E
12	9	16	F	E	F	F	F	E	F	E	E	D	D	D	D	D	D	D	D	D	E	E	E	E	E	E
12	9	17	E	F	F	F	F	F	F	F	F	F	E	D	D	D	D	D	D	D	E	F	G	G	G	F
12	9	18	E	E	E	E	E	F	F	E	D	D	D	D	D	D	D	D	D	D	E	E	E	F	E	E
12	9	19	E	E	E	E	E	E	E	E	D	D	C	C	D	D	D	D	D	E	E	E	E	E	E	E
12	9	20	F	G	G	G	G	G	G	G	E	D	D	D	D	D	D	D	D	D	F	F	F	F	F	F
12	9	21	F	F	F	F	F	F	F	E	D	D	D	C	B	C	C	D	D	D	E	F	G	G	G	G
12	9	22	G	G	F	E	E	E	E	D	D	D	C	D	C	D	D	D	D	D	E	F	G	G	G	G
12	9	23	G	G	G	G	G	G	G	F	E	D	D	D	D	D	D	D	D	D	E	F	G	G	G	G
12	9	24	F	F	G	F	F	G	F	F	E	D	D	D	D	D	D	D	D	D	E	F	E	E	E	E
12	9	25	F	E	E	F	F	F	E	E	E	D	D	D	D	D	D	D	D	E	F	F	F	G	F	F
12	9	26	F	F	F	E	F	E	E	E	D	D	D	D	D	D	D	D	D	E	E	F	F	G	G	G
12	9	27	G	G	G	G	G	G	G	G	E	D	D	D	D	D	D	D	D	D	F	G	G	G	G	G

PROGRAM: JFD VERSION: PC-1.2
NPPD-COOPER NUCLEAR STATION JFD:100M WIND VS 10M DELTA T JUL-DEC 2012
SITE IDENTIFIER: NPPD
DATA PERIOD EXAMINED: 7/ 1/12 - 12/31/12
STABILITY BASED ON: DELTA T BETWEEN 100.0 AND 10.0 METERS

HOURLY STABILITIES

YR	MN	DY	HOURS 1	2	3	4	5	6	7	8	9	10	11	12	13	14	15	16	17	18	19	20	21	22	23	24
12	9	28	G	G	G	G	G	G	G	G	F	D	D	D	D	D	D	D	D	D	E	F	F	F	G	G
12	9	29	G	G	G	G	G	G	G	G	F	E	D	D	D	D	D	D	D	D	F	G	G	G	G	G
12	9	30	G	G	G	G	G	G	G	G	F	E	D	D	D	D	D	D	D	E	F	G	G	G	G	G
12	10	1	G	G	G	G	G	G	F	G	E	D	D	D	D	D	D	D	D	D	E	E	E	E	E	E
12	10	2	E	E	E	E	E	F	G	F	E	D	D	D	D	D	D	D	D	D	F	G	G	G	G	G
12	10	3	G	G	G	G	G	G	G	G	F	D	C	B	B	B	B	C	D	D	E	E	E	E	E	E
12	10	4	E	D	D	D	D	D	D	D	D	D	D	D	D	D	D	D	D	D	E	E	D	E	E	E
12	10	5	D	D	D	D	D	D	E	E	D	D	D	D	D	D	D	D	D	D	F	F	F	G	G	E
12	10	6	E	E	F	F	F	F	E	E	D	D	D	D	D	D	D	D	D	D	E	E	E	F	F	F
12	10	7	G	F	F	G	F	F	F	D	D	D	D	C	D	D	C	D	D	D	E	E	F	F	E	E
12	10	8	E	E	E	E	E	E	E	E	D	D	C	B	B	C	C	D	D	E	E	E	E	E	E	E
12	10	9	E	D	D	D	E	E	E	E	E	D	D	D	D	D	D	D	D	D	E	F	G	F	F	G
12	10	10	G	G	G	G	G	G	F	E	E	D	D	D	D	D	D	D	D	D	F	F	F	F	F	E
12	10	11	E	E	E	F	E	E	E	E	D	D	D	D	D	D	D	D	D	D	D	D	D	D	D	D
12	10	12	D	D	D	D	D	D	D	D	D	D	D	D	D	D	D	D	D	D	D	D	E	E	E	D
12	10	13	D	E	E	E	F	F	F	F	E	D	D	D	D	D	D	D	D	D	E	E	E	E	E	F
12	10	14	F	E	E	E	E	E	E	D	D	D	D	D	D	D	D	D	D	E	F	G	G	G	G	G
12	10	15	G	G	G	G	G	G	G	G	F	D	D	D	D	D	D	D	D	E	E	E	E	F	E	E
12	10	16	E	F	F	F	F	F	F	E	D	D	D	D	D	D	D	D	D	E	F	F	G	F	F	E
12	10	17	E	E	E	E	D	E	D	D	D	E	D	D	D	D	D	D	D	D	E	E	E	E	E	E
12	10	18	E	E	E	E	E	D	E	D	D	D	D	D	D	D	D	D	D	D	D	D	D	D	D	D
12	10	19	D	D	D	D	D	D	D	D	D	D	D	D	D	D	D	D	D	D	D	D	E	E	F	F
12	10	20	F	F	F	G	F	F	F	F	F	E	D	D	D	D	D	D	D	E	E	F	F	E	E	E
12	10	21	E	E	E	F	F	F	F	F	E	D	D	D	D	D	D	D	D	D	E	E	E	E	E	E
12	10	22	E	E	E	E	E	E	E	E	D	D	D	D	D	D	D	D	D	D	D	D	E	E	E	E
12	10	23	E	E	E	E	F	F	E	E	E	E	D	D	D	D	D	D	D	E	E	E	E	E	E	E
12	10	24	E	F	F	G	G	F	F	F	E	D	D	D	D	D	D	D	D	D	D	D	E	E	E	E
12	10	25	E	E	E	E	E	E	E	D	D	D	D	D	D	D	D	D	D	D	D	D	D	D	D	D
12	10	26	D	E	E	E	E	E	E	E	D	D	D	D	D	D	D	D	D	D	E	F	E	E	F	F
12	10	27	F	F	G	F	G	G	G	G	F	D	D	D	D	D	D	D	D	D	E	E	F	F	F	F
12	10	28	E	E	E	E	F	F	F	F	E	D	D	D	D	D	D	D	D	D	E	E	E	E	E	E
12	10	29	E	D	D	D	D	D	D	D	D	D	D	C	C	C	C	D	D	E	E	E	E	E	E	E
12	10	30	E	E	E	E	E	E	E	E	D	D	D	D	D	C	D	D	D	E	E	F	F	F	F	G
12	10	31	G	G	G	G	G	G	G	G	F	D	D	D	D	D	D	D	D	F	F	G	G	G	G	G
12	11	1	G	G	G	G	G	G	G	G	F	D	D	C	C	C	C	D	D	E	E	E	E	E	E	E
12	11	2	E	E	D	D	E	E	E	D	D	D	C	C	C	D	D	D	D	E	E	F	E	E	E	E
12	11	3	E	E	E	E	E	E	E	E	D	D	D	D	D	D	D	D	D	E	F	G	G	G	G	G
12	11	4	G	G	G	G	F	F	F	F	E	D	D	C	C	D	D	D	D	D	E	E	E	E	E	E
12	11	5	D	D	D	D	D	D	D	D	D	D	D	D	D	D	D	D	D	D	D	D	D	D	D	D
12	11	6	D	D	D	D	D	D	D	E	D	D	D	D	D	C	D	D	D	E	E	E	E	F	F	F
12	11	7	F	F	F	F	F	F	E	E	D	D	D	D	D	D	D	D	D	E	F	F	F	F	E	F
12	11	8	F	F	E	E	E	E	E	E	D	D	D	C	C	C	D	D	D	E	F	F	F	F	F	F
12	11	9	F	E	F	F	E	E	E	E	E	D	D	D	C	C	D	D	D	E	E	E	E	E	E	E
12	11	10	E	E	E	E	E	E	E	E	D	D	D	D	D	C	D	D	D	D	D	D	D	D	D	D
12	11	11	D	D	D	D	D	D	D	D	D	D	D	D	D	D	D	D	D	D	D	D	E	E	E	E

PROGRAM: JFD VERSION: PC-1.2
NPPD-COOPER NUCLEAR STATION JFD:100M WIND VS 10M DELTA T JUL-DEC 2012
SITE IDENTIFIER: NPPD
DATA PERIOD EXAMINED: 7/ 1/12 - 12/31/12
STABILITY BASED ON: DELTA T BETWEEN 100.0 AND 10.0 METERS

HOURLY STABILITIES

YR	MN	DY	1	2	3	4	5	6	7	8	9	10	11	12	13	14	15	16	17	18	19	20	21	22	23	24
			HOURS																							
12	11	12	E	E	E	E	E	E	E	E	D	D	D	D	D	D	D	D	D	E	F	G	G	G	G	G
12	11	13	G	G	G	G	G	G	F	F	F	E	D	D	D	D	D	D	E	E	E	E	E	F	F	E
12	11	14	E	E	E	F	F	F	F	E	E	D	D	D	D	D	D	D	E	E	F	E	E	E	E	E
12	11	15	E	E	E	E	E	E	E	E	E	D	D	D	D	D	D	D	D	E	F	G	G	G	F	F
12	11	16	F	E	E	E	E	E	F	F	E	D	D	D	D	D	D	D	D	E	F	F	F	F	F	E
12	11	17	E	E	E	E	F	F	E	E	E	D	D	D	D	D	D	D	D	E	E	E	E	E	E	E
12	11	18	E	E	E	E	E	E	E	E	D	D	D	D	D	C	D	D	D	D	D	D	D	E	E	E
12	11	19	E	E	E	E	E	E	E	E	D	D	D	D	C	D	D	D	D	E	E	F	F	F	F	E
12	11	20	F	F	E	E	F	F	F	E	E	D	D	D	D	D	D	D	E	F	G	G	G	G	G	F
12	11	21	G	F	F	F	G	G	G	F	F	E	D	D	D	D	D	D	D	E	E	E	E	E	E	E
12	11	22	E	E	E	E	E	E	E	E	E	E	D	D	D	D	D	D	D	D	D	E	E	E	E	E
12	11	23	E	D	D	D	D	D	D	D	D	D	D	D	D	D	D	D	D	E	E	E	E	E	F	F
12	11	24	F	G	G	F	F	F	F	E	D	D	D	D	D	C	D	D	D	E	E	E	D	E	E	E
12	11	25	F	F	G	F	F	E	E	E	D	D	D	D	D	D	D	D	D	E	E	E	E	E	E	E
12	11	26	E	E	E	E	E	D	D	D	D	D	D	D	D	D	D	D	D	E	E	E	E	E	E	F
12	11	27	F	G	F	G	G	G	G	F	E	D	D	C	C	C	D	D	D	E	F	F	G	F	F	F
12	11	28	E	F	G	G	G	G	G	G	F	E	D	D	D	D	D	D	E	E	F	F	E	E	E	E
12	11	29	E	E	E	F	E	E	E	F	F	D	D	D	D	D	D	D	E	F	F	G	G	G	G	G
12	11	30	G	G	G	F	F	E	E	E	D	D	D	D	D	D	D	D	D	E	F	G	F	F	F	F
12	12	1	F	F	F	F	E	E	E	E	E	E	E	D	D	D	D	D	D	F	F	F	F	F	F	G
12	12	2	G	G	G	G	G	F	F	F	F	E	E	D	D	D	D	D	E	E	F	F	F	F	F	F
12	12	3	F	F	F	E	E	E	E	E	E	D	D	D	D	D	D	D	D	E	E	E	F	F	E	E
12	12	4	F	F	G	G	G	G	G	G	G	E	D	D	D	D	D	D	E	F	G	G	G	G	G	G
12	12	5	G	G	G	F	F	E	E	E	E	E	D	D	D	D	D	D	D	E	E	E	E	E	E	E
12	12	6	E	E	E	E	D	E	E	E	D	D	D	D	D	D	D	D	D	E	E	D	D	D	E	E
12	12	7	D	D	D	D	E	E	E	E	E	D	D	D	D	D	D	D	D	D	D	E	E	E	E	E
12	12	8	E	F	E	E	E	E	E	E	D	D	D	D	D	D	D	D	D	D	D	D	D	D	D	D
12	12	9	D	D	D	D	D	D	D	E	D	D	D	D	D	D	D	D	D	D	D	D	D	D	D	D
12	12	10	D	D	D	D	D	D	D	D	D	D	D	D	D	D	D	D	D	E	E	E	F	E	E	E
12	12	11	F	F	F	E	F	F	E	E	F	E	D	D	D	D	D	D	D	E	F	F	E	E	E	F
12	12	12	E	F	F	F	F	F	E	F	E	D	D	D	C	C	D	D	D	E	E	E	E	E	E	E
12	12	13	E	E	E	E	E	E	E	E	E	E	D	D	D	D	D	D	E	F	F	G	G	G	G	G
12	12	14	G	F	F	F	G	G	F	F	F	D	D	D	D	D	D	D	D	D	D	D	D	D	D	D
12	12	15	D	D	D	D	D	D	D	D	E	D	D	D	D	D	D	D	D	D	D	D	D	D	D	E
12	12	16	E	D	D	D	D	D	D	D	D	D	D	D	D	D	D	D	D	D	D	D	E	E	E	E
12	12	17	E	E	E	E	F	F	E	F	D	D	D	D	-	-	D	D	D	E	E	F	E	E	E	E
12	12	18	E	F	F	F	F	E	E	F	E	D	D	D	D	D	D	D	D	E	F	F	F	F	F	F
12	12	19	G	F	F	E	E	E	E	E	E	D	D	D	D	D	D	D	D	D	D	D	D	D	D	D
12	12	20	D	D	D	D	D	D	D	D	D	D	D	D	D	D	D	D	D	D	E	E	E	E	E	E
12	12	21	E	E	F	F	F	F	G	G	F	E	E	D	D	D	D	D	D	E	E	E	F	F	F	F
12	12	22	E	E	F	F	F	F	F	F	F	E	D	D	D	D	D	D	D	F	F	E	D	D	D	D
12	12	23	D	D	D	D	D	D	D	D	D	D	D	D	D	D	D	D	D	D	D	D	D	D	D	D
12	12	24	D	D	D	D	D	D	D	D	D	D	D	D	D	D	D	D	D	D	D	D	D	D	D	D
12	12	25	D	D	D	D	D	D	D	D	D	D	D	C	C	C	D	D	D	D	D	D	D	D	D	D
12	12	26	D	D	D	D	D	D	D	D	D	D	D	D	D	D	D	D	D	D	E	D	E	E	E	E

PROGRAM: JFD VERSION: PC-1.2
NPPD-COOPER NUCLEAR STATION JFD:100M WIND VS 10M DELTA T JUL-DEC 2012
SITE IDENTIFIER: NPPD
DATA PERIOD EXAMINED: 7/ 1/12 - 12/31/12
STABILITY BASED ON: DELTA T BETWEEN 100.0 AND 10.0 METERS

HOURLY STABILITIES
HOURS

YR	MN	DY	1	2	3	4	5	6	7	8	9	10	11	12	13	14	15	16	17	18	19	20	21	22	23	24
12	12	27	E	E	E	E	E	E	D	D	D	D	D	D	D	D	D	D	D	D	D	D	D	D	D	D
12	12	28	D	D	D	D	D	D	D	D	D	D	D	D	D	D	D	D	D	D	D	D	D	D	D	D
12	12	29	D	D	D	D	D	D	D	E	D	D	D	D	D	D	D	D	D	E	E	F	F	F	G	G
12	12	30	G	G	G	G	G	G	G	G	G	F	E	D	D	D	D	D	E	E	E	E	D	D	E	D
12	12	31	D	D	D	D	D	D	D	D	D	D	D	D	D	D	D	D	D	D	D	D	D	D	D	D

JFDs of 100-Meter Wind vs. Delta T

January-December 2012

PROGRAM: JFD VERSION: PC-1.2
NPPD-COOPER NUCLEAR STATION JFD:100M WIND VS 10M DELTA T JAN-DEC 2012
SITE IDENTIFIER: NPPD
DATA PERIOD EXAMINED: 1/ 1/12 -12/31/12

*** JAN-DEC 2012 ***

STABILITY CLASS A

STABILITY BASED ON: DELTA T BETWEEN 100.0 AND 10.0 METERS
WIND MEASURED AT: 100.0 METERS
WIND THRESHOLD AT: 1.00 MPH
JOINT FREQUENCY DISTRIBUTION OF WIND SPEED AND DIRECTION IN HOURS AT 100.00 METERS

SPEED (MPH)	N	NNE	NE	ENE	E	ESE	SE	SSE	S	SSW	SW	WSW	W	WNW	NW	NNW	TOTAL
CALM																	0
1.01- 3.50	0	0	0	0	0	0	0	0	0	0	0	0	0	0	0	0	0
3.51- 7.50	0	0	0	0	0	0	0	0	0	0	0	0	0	0	0	0	0
7.51-12.50	0	0	0	0	0	0	0	1	0	0	0	1	0	0	0	0	2
12.51-18.50	0	0	0	0	0	0	2	6	13	1	0	0	0	0	0	0	22
18.51-24.00	0	0	0	0	0	0	2	2	23	3	0	0	0	0	0	0	30
>24.00	0	0	0	0	0	0	0	1	13	0	0	0	0	0	0	0	14
TOTAL	0	0	0	0	0	0	4	10	49	4	0	1	0	0	0	0	68

STABILITY CLASS B

STABILITY BASED ON: DELTA T BETWEEN 100.0 AND 10.0 METERS
WIND MEASURED AT: 100.0 METERS
WIND THRESHOLD AT: 1.00 MPH
JOINT FREQUENCY DISTRIBUTION OF WIND SPEED AND DIRECTION IN HOURS AT 100.00 METERS

SPEED (MPH)	N	NNE	NE	ENE	E	ESE	SE	SSE	S	SSW	SW	WSW	W	WNW	NW	NNW	TOTAL
CALM																	0
1.01- 3.50	0	0	0	0	0	0	0	0	0	0	0	0	0	0	0	0	0
3.51- 7.50	0	0	0	0	1	0	0	1	0	0	0	1	0	0	0	0	3
7.51-12.50	0	0	0	0	0	0	5	10	12	5	0	1	1	0	0	0	34
12.51-18.50	0	0	0	0	0	0	13	11	31	13	0	0	0	0	0	0	68
18.51-24.00	0	0	0	0	0	0	2	7	29	2	2	0	0	0	0	0	42
>24.00	0	0	0	0	0	0	0	5	31	0	0	0	0	0	1	0	37
TOTAL	0	0	0	0	1	0	20	34	103	20	2	2	1	0	1	0	184

PROGRAM: JFD VERSION: PC-1.2
NPPD-COOPER NUCLEAR STATION JFD:100M WIND VS 10M DELTA T JAN-DEC 2012
SITE IDENTIFIER: NPPD
DATA PERIOD EXAMINED: 1/ 1/12 -12/31/12

*** JAN-DEC 2012 ***

STABILITY CLASS C

STABILITY BASED ON: DELTA T BETWEEN 100.0 AND 10.0 METERS
WIND MEASURED AT: 100.0 METERS
WIND THRESHOLD AT: 1.00 MPH
JOINT FREQUENCY DISTRIBUTION OF WIND SPEED AND DIRECTION IN HOURS AT 100.00 METERS

SPEED (MPH)	N	NNE	NE	ENE	E	ESE	SE	SSE	S	SSW	SW	WSW	W	WNW	NW	NNW	TOTAL
CALM																	0
1.01- 3.50	0	0	0	0	0	0	0	0	0	0	0	0	0	0	0	0	0
3.51- 7.50	1	2	3	2	4	4	3	2	3	1	0	0	0	0	0	0	25
7.51-12.50	7	2	0	4	4	9	15	19	19	45	6	1	2	2	0	1	136
12.51-18.50	14	2	0	0	2	1	27	24	26	12	4	5	1	7	4	12	141
18.51-24.00	4	0	0	1	0	0	4	7	26	7	3	4	0	5	0	8	69
>24.00	2	0	0	0	0	0	2	4	30	2	1	0	0	0	3	3	47
TOTAL	28	6	3	7	10	14	51	56	104	67	14	10	3	14	7	24	418

STABILITY CLASS D

STABILITY BASED ON: DELTA T BETWEEN 100.0 AND 10.0 METERS
WIND MEASURED AT: 100.0 METERS
WIND THRESHOLD AT: 1.00 MPH
JOINT FREQUENCY DISTRIBUTION OF WIND SPEED AND DIRECTION IN HOURS AT 100.00 METERS

SPEED (MPH)	N	NNE	NE	ENE	E	ESE	SE	SSE	S	SSW	SW	WSW	W	WNW	NW	NNW	TOTAL
CALM																	0
1.01- 3.50	3	5	3	6	9	6	6	2	1	6	5	5	2	6	3	5	73
3.51- 7.50	66	47	30	33	30	47	53	40	37	36	25	25	21	6	22	40	558
7.51-12.50	121	60	51	35	41	68	86	66	61	100	64	33	22	46	67	99	1020
12.51-18.50	167	66	23	35	44	50	77	82	89	60	51	29	29	49	117	141	1109
18.51-24.00	65	35	7	11	12	10	39	84	112	26	9	9	10	34	114	121	698
>24.00	21	9	1	1	12	14	16	54	127	14	2	11	17	34	111	59	503
TOTAL	443	222	115	121	148	195	277	328	427	242	156	112	101	175	434	465	3961

PROGRAM: JFD VERSION: PC-1.2
NPPD-COOPER NUCLEAR STATION JFD:100M WIND VS 10M DELTA T JAN-DEC 2012
SITE IDENTIFIER: NPPD
DATA PERIOD EXAMINED: 1/ 1/12 -12/31/12

*** JAN-DEC 2012 ***

STABILITY CLASS E

STABILITY BASED ON: DELTA T BETWEEN 100.0 AND 10.0 METERS
WIND MEASURED AT: 100.0 METERS
WIND THRESHOLD AT: 1.00 MPH
JOINT FREQUENCY DISTRIBUTION OF WIND SPEED AND DIRECTION IN HOURS AT 100.00 METERS

SPEED (MPH)	N	NNE	NE	ENE	E	ESE	SE	SSE	S	SSW	SW	WSW	W	WNW	NW	NNW	TOTAL
CALM																	0
1.01- 3.50	2	3	1	2	2	3	1	0	2	2	4	2	2	1	2	0	29
3.51- 7.50	16	15	12	14	9	17	7	10	15	11	15	9	12	5	12	14	193
7.51-12.50	47	68	46	17	28	36	40	71	55	79	18	7	17	21	33	33	616
12.51-18.50	68	76	15	12	20	39	103	122	166	79	46	14	13	24	59	94	950
18.51-24.00	25	9	2	2	1	13	44	65	146	22	31	12	17	21	34	25	469
>24.00	1	1	4	0	0	0	20	29	50	3	10	4	13	17	11	5	168
TOTAL	159	172	80	47	60	108	215	297	434	196	124	48	74	89	151	171	2425

STABILITY CLASS F

STABILITY BASED ON: DELTA T BETWEEN 100.0 AND 10.0 METERS
WIND MEASURED AT: 100.0 METERS
WIND THRESHOLD AT: 1.00 MPH
JOINT FREQUENCY DISTRIBUTION OF WIND SPEED AND DIRECTION IN HOURS AT 100.00 METERS

SPEED (MPH)	N	NNE	NE	ENE	E	ESE	SE	SSE	S	SSW	SW	WSW	W	WNW	NW	NNW	TOTAL
CALM																	0
1.01- 3.50	0	0	3	2	1	2	3	4	3	3	3	3	1	3	1	1	33
3.51- 7.50	15	10	14	26	11	13	10	18	20	16	11	5	9	6	7	7	198
7.51-12.50	19	18	19	14	12	16	45	64	53	63	17	10	8	13	13	25	409
12.51-18.50	9	9	3	2	1	9	30	73	65	42	18	8	10	10	18	38	345
18.51-24.00	1	3	0	0	0	0	4	5	31	6	13	7	12	5	10	4	101
>24.00	0	0	0	0	0	0	0	0	1	1	1	6	4	3	3	0	19
TOTAL	44	40	39	44	25	40	92	164	173	131	63	39	44	40	52	75	1105

PROGRAM: JFD VERSION: PC-1.2
NPPD-COOPER NUCLEAR STATION JFD:100M WIND VS 10M DELTA T JAN-DEC 2012
SITE IDENTIFIER: NPPD
DATA PERIOD EXAMINED: 1/ 1/12 -12/31/12

*** JAN-DEC 2012 ***

STABILITY CLASS G

STABILITY BASED ON: DELTA T BETWEEN 100.0 AND 10.0 METERS
WIND MEASURED AT: 100.0 METERS
WIND THRESHOLD AT: 1.00 MPH
JOINT FREQUENCY DISTRIBUTION OF WIND SPEED AND DIRECTION IN HOURS AT 100.00 METERS

SPEED (MPH)	N	NNE	NE	ENE	E	ESE	SE	SSE	S	SSW	SW	WSW	W	WNW	NW	NNW	TOTAL
CALM																	0
1.01- 3.50	2	2	5	4	3	2	1	3	0	7	1	1	2	0	2	3	38
3.51- 7.50	12	9	8	17	9	19	10	12	15	19	13	5	6	13	12	16	195
7.51-12.50	26	10	7	3	1	8	21	29	27	27	25	16	17	12	13	19	261
12.51-18.50	2	0	0	0	0	1	6	25	10	11	13	4	8	9	3	5	97
18.51-24.00	7	3	0	0	0	0	0	0	3	1	1	6	0	0	2	3	26
>24.00	5	0	0	0	0	0	0	0	0	0	1	0	0	0	0	0	6
TOTAL	54	24	20	24	13	30	38	69	55	65	54	32	33	34	32	46	623

STABILITY CLASS ALL

STABILITY BASED ON: DELTA T BETWEEN 100.0 AND 10.0 METERS
WIND MEASURED AT: 100.0 METERS
WIND THRESHOLD AT: 1.00 MPH
JOINT FREQUENCY DISTRIBUTION OF WIND SPEED AND DIRECTION IN HOURS AT 100.00 METERS

SPEED (MPH)	N	NNE	NE	ENE	E	ESE	SE	SSE	S	SSW	SW	WSW	W	WNW	NW	NNW	TOTAL
CALM																	0
1.01- 3.50	7	10	12	14	15	13	11	9	6	18	13	11	7	10	8	9	173
3.51- 7.50	110	83	67	92	64	100	83	83	90	83	64	45	48	30	53	77	1172
7.51-12.50	220	158	123	73	86	137	212	260	227	319	130	69	67	94	126	177	2478
12.51-18.50	260	153	41	49	67	100	258	343	400	218	132	60	61	99	201	290	2732
18.51-24.00	102	50	9	14	13	23	95	170	370	67	59	38	39	65	160	161	1435
>24.00	29	10	5	1	12	14	38	93	252	20	15	21	34	54	129	67	794
TOTAL	728	464	257	243	257	387	697	958	1345	725	413	244	256	352	677	781	8784

PROGRAM: JFD VERSION: PC-1.2
NPPD-COOPER NUCLEAR STATION JFD:100M WIND VS 10M DELTA T JAN-DEC 2012
SITE IDENTIFIER: NPPD
DATA PERIOD EXAMINED: 1/ 1/12 - 2/31/12

*** JAN-DEC 2012 ***

STABILITY BASED ON: DELTA T BETWEEN 100.0 AND 10.0 METERS
WIND MEASURED AT: 100.0 METERS
WIND THRESHOLD AT: 1.00 MPH

TOTAL NUMBER OF OBSERVATIONS: 8784

TOTAL NUMBER OF VALID OBSERVATIONS: 8784

TOTAL NUMBER OF MISSING OBSERVATIONS: 0

PERCENT DATA RECOVERY FOR THIS PERIOD: 100.0 %

MEAN WIND SPEED FOR THIS PERIOD: 14.4 MPH

NUMBER OF OBSERVATIONS WITH BACKUP WIND SPEED: 2

NUMBER OF OBSERVATIONS WITH BACKUP WIND DIRECTION: 0

NUMBER OF OBSERVATIONS WITH BACKUP STABILITY: 0

TOTAL NUMBER OF OBSERVATIONS WITH BACKUP DATA: 2

PERCENTAGE OCCURRENCE OF STABILITY CLASSES

A	B	C	D	E	F	G
.77	2.09	4.76	45.09	27.61	12.58	7.09

DISTRIBUTION OF WIND DIRECTION VS STABILITY

	N	NNE	NE	ENE	E	ESE	SE	SSE	S	SSW	SW	WSW	W	WNW	NW	NNW	CALM
A	0	0	0	0	0	0	4	10	49	4	0	1	0	0	0	0	0
B	0	0	0	0	1	0	20	34	103	20	2	2	1	0	1	0	0
C	28	6	3	7	10	14	51	56	104	67	14	10	3	14	7	24	0
D	443	222	115	121	148	195	277	328	427	242	156	112	101	175	434	465	0
E	159	172	80	47	60	108	215	297	434	196	124	48	74	89	151	171	0
F	44	40	39	44	25	40	92	164	173	131	63	39	44	40	52	75	0
G	54	24	20	24	13	30	38	69	55	65	54	32	33	34	32	46	0

ATMOSPHERIC DIFFUSION ESTIMATES

The tables of atmospheric diffusion estimates in this section were generated using the computer code XOQDOQ. Data are given for 22 distances and 16 compass points (directions from site) centered on the Cooper Nuclear Station. Tables are presented for the ground-level (vent) and elevated (stack) release options separately, and for the following time periods in 2012: January-March, April-June, January-June, July-September, October-December, July-December, and January-December.

Atmospheric Diffusion Estimates

Ground Level Releases

January-March 2012

VENTS GROUND LEVEL RELEASES - JAN-MAR 2012
NO DECAY, UNDEPLETED
CORRECTED USING STANDARD OPEN TERRAIN FACTORS

ANNUAL AVERAGE CHI/Q (SEC/METER CUBED) DISTANCE IN MILES FROM THE SITE

SECTOR	.250	.500	.750	1.000	1.500	2.000	2.500	3.000	3.500	4.000	4.500
S	3.811E-05	1.204E-05	6.167E-06	3.043E-06	1.249E-06	6.863E-07	4.402E-07	3.102E-07	2.329E-07	1.830E-07	1.487E-07
SSW	2.034E-05	6.591E-06	3.467E-06	1.728E-06	7.013E-07	3.825E-07	2.438E-07	1.710E-07	1.279E-07	1.001E-07	8.108E-08
SW	8.592E-06	2.781E-06	1.433E-06	7.067E-07	2.872E-07	1.568E-07	1.001E-07	7.023E-08	5.254E-08	4.115E-08	3.335E-08
WSW	8.928E-06	2.966E-06	1.571E-06	7.840E-07	3.159E-07	1.714E-07	1.088E-07	7.599E-08	5.664E-08	4.421E-08	3.572E-08
W	1.302E-05	4.454E-06	2.330E-06	1.148E-06	4.546E-07	2.438E-07	1.534E-07	1.064E-07	7.885E-08	6.124E-08	4.927E-08
WNW	2.016E-05	6.482E-06	3.369E-06	1.670E-06	6.769E-07	3.691E-07	2.352E-07	1.649E-07	1.233E-07	9.652E-08	7.818E-08
NW	3.217E-05	1.044E-05	5.429E-06	2.684E-06	1.082E-06	5.876E-07	3.734E-07	2.612E-07	1.949E-07	1.524E-07	1.232E-07
NNW	7.171E-05	2.202E-05	1.134E-05	5.648E-06	2.371E-06	1.322E-06	8.570E-07	6.089E-07	4.602E-07	3.635E-07	2.968E-07
N	9.714E-05	3.004E-05	1.569E-05	7.871E-06	3.280E-06	1.820E-06	1.175E-06	8.328E-07	6.279E-07	4.950E-07	4.034E-07
NNE	4.970E-05	1.545E-05	8.096E-06	4.061E-06	1.686E-06	9.338E-07	6.021E-07	4.260E-07	3.209E-07	2.528E-07	2.058E-07
NE	2.375E-05	7.637E-06	4.116E-06	2.083E-06	8.496E-07	4.648E-07	2.968E-07	2.085E-07	1.561E-07	1.223E-07	9.910E-08
ENE	1.884E-05	5.970E-06	3.176E-06	1.600E-06	6.541E-07	3.584E-07	2.293E-07	1.612E-07	1.208E-07	9.473E-08	7.685E-08
E	1.833E-05	6.000E-06	3.233E-06	1.629E-06	6.549E-07	3.549E-07	2.251E-07	1.572E-07	1.172E-07	9.146E-08	7.389E-08
ESE	2.169E-05	7.383E-06	3.934E-06	1.956E-06	7.764E-07	4.172E-07	2.630E-07	1.828E-07	1.357E-07	1.055E-07	8.499E-08
SE	3.010E-05	1.014E-05	5.478E-06	2.754E-06	1.100E-06	5.931E-07	3.747E-07	2.609E-07	1.938E-07	1.509E-07	1.216E-07
SSE	2.987E-05	9.723E-06	5.075E-06	2.520E-06	1.025E-06	5.595E-07	3.569E-07	2.505E-07	1.874E-07	1.467E-07	1.189E-07

ANNUAL AVERAGE CHI/Q (SEC/METER CUBED) DISTANCE IN MILES FROM THE SITE

SECTOR	5.000	7.500	10.000	15.000	20.000	25.000	30.000	35.000	40.000	45.000	50.000
S	1.240E-07	6.572E-08	4.354E-08	2.578E-08	1.787E-08	1.348E-08	1.072E-08	8.837E-09	7.482E-09	6.464E-09	5.674E-09
SSW	6.744E-08	3.533E-08	2.321E-08	1.359E-08	9.346E-09	7.006E-09	5.543E-09	4.552E-09	3.840E-09	3.307E-09	2.894E-09
SW	2.775E-08	1.457E-08	9.586E-09	5.625E-09	3.874E-09	2.907E-09	2.303E-09	1.893E-09	1.599E-09	1.378E-09	1.207E-09
WSW	2.964E-08	1.539E-08	1.005E-08	5.824E-09	3.972E-09	2.958E-09	2.328E-09	1.904E-09	1.600E-09	1.373E-09	1.198E-09
W	4.074E-08	2.088E-08	1.351E-08	7.737E-09	5.237E-09	3.878E-09	3.040E-09	2.476E-09	2.075E-09	1.777E-09	1.547E-09
WNW	6.503E-08	3.409E-08	2.241E-08	1.314E-08	9.052E-09	6.794E-09	5.382E-09	4.424E-09	3.735E-09	3.219E-09	2.820E-09
NW	1.024E-07	5.346E-08	3.506E-08	2.048E-08	1.407E-08	1.055E-08	8.342E-09	6.850E-09	5.778E-09	4.976E-09	4.355E-09
NNW	2.485E-07	1.335E-07	8.922E-08	5.340E-08	3.723E-08	2.820E-08	2.249E-08	1.860E-08	1.578E-08	1.366E-08	1.201E-08
N	3.373E-07	1.802E-07	1.200E-07	7.142E-08	4.962E-08	3.748E-08	2.983E-08	2.462E-08	2.085E-08	1.802E-08	1.582E-08
NNE	1.720E-07	9.170E-08	6.097E-08	3.623E-08	2.514E-08	1.897E-08	1.509E-08	1.245E-08	1.054E-08	9.105E-09	7.991E-09
NE	8.247E-08	4.327E-08	2.845E-08	1.666E-08	1.144E-08	8.567E-09	6.771E-09	5.555E-09	4.681E-09	4.028E-09	3.522E-09
ENE	6.401E-08	3.370E-08	2.222E-08	1.305E-08	8.993E-09	6.748E-09	5.344E-09	4.391E-09	3.706E-09	3.193E-09	2.795E-09
E	6.132E-08	3.186E-08	2.081E-08	1.208E-08	8.256E-09	6.159E-09	4.853E-09	3.971E-09	3.340E-09	2.868E-09	2.504E-09
ESE	7.036E-08	3.625E-08	2.354E-08	1.355E-08	9.212E-09	6.843E-09	5.375E-09	4.386E-09	3.680E-09	3.155E-09	2.749E-09
SE	1.007E-07	5.190E-08	3.370E-08	1.939E-08	1.316E-08	9.766E-09	7.663E-09	6.248E-09	5.238E-09	4.486E-09	3.907E-09
SSE	9.889E-08	5.183E-08	3.408E-08	1.995E-08	1.372E-08	1.028E-08	8.130E-09	6.676E-09	5.631E-09	4.849E-09	4.244E-09

CHI/Q (SEC/METER CUBED) FOR EACH SEGMENT
SEGMENT BOUNDARIES IN MILES FROM THE SITE

DIRECTION FROM SITE	.5-1	1-2	2-3	3-4	4-5	5-10	10-20	20-30	30-40	40-50
S	6.083E-06	1.397E-06	4.538E-07	2.360E-07	1.497E-07	6.882E-08	2.621E-08	1.354E-08	8.858E-09	6.473E-09
SSW	3.388E-06	7.878E-07	2.517E-07	1.296E-07	8.166E-08	3.708E-08	1.384E-08	7.045E-09	4.564E-09	3.312E-09
SW	1.410E-06	3.225E-07	1.033E-07	5.325E-08	3.359E-08	1.528E-08	5.727E-09	2.923E-09	1.898E-09	1.380E-09
WSW	1.531E-06	3.557E-07	1.123E-07	5.743E-08	3.598E-08	1.618E-08	5.940E-09	2.976E-09	1.909E-09	1.376E-09
W	2.277E-06	5.149E-07	1.587E-07	8.002E-08	4.966E-08	2.201E-08	7.908E-09	3.905E-09	2.484E-09	1.780E-09
WNW	3.305E-06	7.607E-07	2.428E-07	1.250E-07	7.874E-08	3.578E-08	1.338E-08	6.831E-09	4.435E-09	3.224E-09
NW	5.324E-06	1.218E-06	3.856E-07	1.977E-07	1.241E-07	5.616E-08	2.087E-08	1.061E-08	6.868E-09	4.984E-09
NNW	1.118E-05	2.633E-06	8.819E-07	4.659E-07	2.987E-07	1.394E-07	5.417E-08	2.832E-08	1.864E-08	1.368E-08
N	1.540E-05	3.651E-06	1.210E-06	6.358E-07	4.061E-07	1.883E-07	7.252E-08	3.766E-08	2.467E-08	1.805E-08
NNE	7.936E-06	1.879E-06	6.201E-07	3.250E-07	2.072E-07	9.589E-08	3.680E-08	1.907E-08	1.248E-08	9.118E-09
NE	3.995E-06	9.528E-07	3.063E-07	1.582E-07	9.980E-08	4.540E-08	1.696E-08	8.616E-09	5.570E-09	4.034E-09
ENE	3.096E-06	7.328E-07	2.365E-07	1.224E-07	7.739E-08	3.533E-08	1.329E-08	6.785E-09	4.402E-09	3.198E-09
E	3.135E-06	7.380E-07	2.326E-07	1.188E-07	7.444E-08	3.349E-08	1.232E-08	6.196E-09	3.983E-09	2.873E-09
ESE	3.821E-06	8.788E-07	2.720E-07	1.376E-07	8.565E-08	3.818E-08	1.384E-08	6.888E-09	4.400E-09	3.160E-09
SE	5.303E-06	1.242E-06	3.874E-07	1.966E-07	1.226E-07	5.467E-08	1.980E-08	9.830E-09	6.267E-09	4.495E-09
SSE	4.973E-06	1.150E-06	3.684E-07	1.899E-07	1.197E-07	5.440E-08	2.032E-08	1.034E-08	6.693E-09	4.857E-09

VENTS GROUND LEVEL RELEASES - JAN-MAR 2012
2.260 DAY DECAY, UNDEPLETED
CORRECTED USING STANDARD OPEN TERRAIN FACTORS

ANNUAL AVERAGE CHI/Q (SEC/METER CUBED) DISTANCE IN MILES FROM THE SITE

SECTOR	.250	.500	.750	1.000	1.500	2.000	2.500	3.000	3.500	4.000	4.500
S	3.807E-05	1.201E-05	6.148E-06	3.030E-06	1.241E-06	6.805E-07	4.355E-07	3.062E-07	2.294E-07	1.798E-07	1.457E-07
SSW	2.032E-05	6.577E-06	3.456E-06	1.721E-06	6.966E-07	3.791E-07	2.411E-07	1.687E-07	1.258E-07	9.826E-08	7.940E-08
SW	8.582E-06	2.775E-06	1.428E-06	7.036E-07	2.853E-07	1.554E-07	9.890E-08	6.924E-08	5.168E-08	4.037E-08	3.264E-08
WSW	8.917E-06	2.959E-06	1.565E-06	7.804E-07	3.137E-07	1.697E-07	1.075E-07	7.491E-08	5.569E-08	4.336E-08	3.495E-08
W	1.301E-05	4.446E-06	2.323E-06	1.143E-06	4.519E-07	2.418E-07	1.518E-07	1.051E-07	7.773E-08	6.024E-08	4.836E-08
WNW	2.014E-05	6.468E-06	3.358E-06	1.663E-06	6.725E-07	3.658E-07	2.326E-07	1.627E-07	1.214E-07	9.476E-08	7.657E-08
NW	3.214E-05	1.042E-05	5.413E-06	2.674E-06	1.075E-06	5.826E-07	3.694E-07	2.578E-07	1.920E-07	1.497E-07	1.208E-07
NNW	7.163E-05	2.197E-05	1.130E-05	5.621E-06	2.354E-06	1.310E-06	8.466E-07	6.000E-07	4.524E-07	3.564E-07	2.902E-07
N	9.704E-05	2.997E-05	1.564E-05	7.837E-06	3.258E-06	1.804E-06	1.163E-06	8.218E-07	6.182E-07	4.862E-07	3.953E-07
NNE	4.965E-05	1.542E-05	8.070E-06	4.044E-06	1.676E-06	9.259E-07	5.957E-07	4.206E-07	3.161E-07	2.484E-07	2.018E-07
NE	2.373E-05	7.622E-06	4.104E-06	2.075E-06	8.445E-07	4.610E-07	2.938E-07	2.059E-07	1.538E-07	1.202E-07	9.724E-08
ENE	1.882E-05	5.958E-06	3.166E-06	1.593E-06	6.499E-07	3.553E-07	2.268E-07	1.591E-07	1.189E-07	9.306E-08	7.532E-08
E	1.832E-05	5.991E-06	3.225E-06	1.623E-06	6.517E-07	3.526E-07	2.233E-07	1.557E-07	1.158E-07	9.024E-08	7.278E-08
ESE	2.167E-05	7.371E-06	3.925E-06	1.949E-06	7.726E-07	4.144E-07	2.608E-07	1.809E-07	1.341E-07	1.041E-07	8.368E-08
SE	3.008E-05	1.012E-05	5.466E-06	2.746E-06	1.095E-06	5.893E-07	3.716E-07	2.583E-07	1.916E-07	1.489E-07	1.198E-07
SSE	2.984E-05	9.704E-06	5.061E-06	2.510E-06	1.019E-06	5.550E-07	3.533E-07	2.474E-07	1.846E-07	1.443E-07	1.166E-07

ANNUAL AVERAGE CHI/Q (SEC/METER CUBED) DISTANCE IN MILES FROM THE SITE

SECTOR	5.000	7.500	10.000	15.000	20.000	25.000	30.000	35.000	40.000	45.000	50.000
S	1.213E-07	6.352E-08	4.158E-08	2.404E-08	1.627E-08	1.198E-08	9.299E-09	7.488E-09	6.192E-09	5.225E-09	4.480E-09
SSW	6.588E-08	3.409E-08	2.213E-08	1.264E-08	8.482E-09	6.204E-09	4.790E-09	3.838E-09	3.160E-09	2.655E-09	2.268E-09
SW	2.709E-08	1.404E-08	9.125E-09	5.220E-09	3.504E-09	2.564E-09	1.980E-09	1.586E-09	1.306E-09	1.098E-09	9.375E-10
WSW	2.893E-08	1.483E-08	9.564E-09	5.404E-09	3.592E-09	2.608E-09	2.001E-09	1.595E-09	1.307E-09	1.093E-09	9.302E-10
W	3.990E-08	2.022E-08	1.294E-08	7.245E-09	4.794E-09	3.470E-09	2.658E-09	2.117E-09	1.734E-09	1.451E-09	1.235E-09
WNW	6.354E-08	3.290E-08	2.137E-08	1.222E-08	8.208E-09	6.009E-09	4.642E-09	3.722E-09	3.066E-09	2.577E-09	2.202E-09
NW	1.001E-07	5.167E-08	3.348E-08	1.910E-08	1.281E-08	9.370E-09	7.235E-09	5.799E-09	4.776E-09	4.016E-09	3.432E-09
NNW	2.424E-07	1.286E-07	8.483E-08	4.948E-08	3.363E-08	2.483E-08	1.931E-08	1.557E-08	1.288E-08	1.087E-08	9.321E-09
N	3.298E-07	1.741E-07	1.146E-07	6.666E-08	4.525E-08	3.340E-08	2.598E-08	2.095E-08	1.735E-08	1.466E-08	1.258E-08
NNE	1.683E-07	8.871E-08	5.832E-08	3.388E-08	2.299E-08	1.696E-08	1.319E-08	1.064E-08	8.810E-09	7.445E-09	6.391E-09
NE	8.075E-08	4.190E-08	2.725E-08	1.561E-08	1.049E-08	7.680E-09	5.938E-09	4.765E-09	3.929E-09	3.308E-09	2.830E-09
ENE	6.259E-08	3.257E-08	2.123E-08	1.219E-08	8.202E-09	6.014E-09	4.654E-09	3.737E-09	3.083E-09	2.596E-09	2.222E-09
E	6.030E-08	3.106E-08	2.012E-08	1.148E-08	7.717E-09	5.661E-09	4.388E-09	3.532E-09	2.922E-09	2.469E-09	2.121E-09
ESE	6.916E-08	3.530E-08	2.272E-08	1.284E-08	8.568E-09	6.248E-09	4.817E-09	3.859E-09	3.180E-09	2.676E-09	2.290E-09
SE	9.905E-08	5.057E-08	3.254E-08	1.838E-08	1.225E-08	8.922E-09	6.873E-09	5.502E-09	4.529E-09	3.808E-09	3.257E-09
SSE	9.681E-08	5.017E-08	3.261E-08	1.866E-08	1.253E-08	9.174E-09	7.091E-09	5.688E-09	4.689E-09	3.946E-09	3.375E-09

CHI/Q (SEC/METER CUBED) FOR EACH SEGMENT

SEGMENT BOUNDARIES IN MILES FROM THE SITE

DIRECTION FROM SITE	.5-1	1-2	2-3	3-4	4-5	5-10	10-20	20-30	30-40	40-50
S	6.065E-06	1.389E-06	4.491E-07	2.324E-07	1.468E-07	6.661E-08	2.448E-08	1.205E-08	7.512E-09	5.236E-09
SSW	3.378E-06	7.830E-07	2.489E-07	1.276E-07	7.998E-08	3.584E-08	1.290E-08	6.246E-09	3.851E-09	2.661E-09
SW	1.405E-06	3.205E-07	1.021E-07	5.239E-08	3.287E-08	1.476E-08	5.325E-09	2.581E-09	1.592E-09	1.100E-09
WSW	1.526E-06	3.534E-07	1.111E-07	5.649E-08	3.521E-08	1.562E-08	5.523E-09	2.628E-09	1.601E-09	1.096E-09
W	2.271E-06	5.122E-07	1.571E-07	7.890E-08	4.875E-08	2.136E-08	7.421E-09	3.498E-09	2.125E-09	1.455E-09
WNW	3.296E-06	7.562E-07	2.401E-07	1.230E-07	7.713E-08	3.458E-08	1.247E-08	6.049E-09	3.735E-09	2.583E-09
NW	5.308E-06	1.211E-06	3.816E-07	1.947E-07	1.217E-07	5.436E-08	1.950E-08	9.433E-09	5.820E-09	4.025E-09
NNW	1.115E-05	2.616E-06	8.714E-07	4.580E-07	2.921E-07	1.344E-07	5.029E-08	2.497E-08	1.561E-08	1.089E-08
N	1.536E-05	3.630E-06	1.197E-06	6.261E-07	3.980E-07	1.823E-07	6.780E-08	3.359E-08	2.101E-08	1.468E-08
NNE	7.913E-06	1.869E-06	6.137E-07	3.202E-07	2.032E-07	9.289E-08	3.447E-08	1.706E-08	1.067E-08	7.459E-09
NE	3.984E-06	9.475E-07	3.032E-07	1.559E-07	9.794E-08	4.403E-08	1.592E-08	7.731E-09	4.781E-09	3.315E-09
ENE	3.087E-06	7.285E-07	2.340E-07	1.206E-07	7.586E-08	3.420E-08	1.242E-08	6.054E-09	3.750E-09	2.602E-09
E	3.128E-06	7.347E-07	2.307E-07	1.175E-07	7.333E-08	3.269E-08	1.173E-08	5.700E-09	3.544E-09	2.474E-09
ESE	3.813E-06	8.750E-07	2.698E-07	1.360E-07	8.435E-08	3.723E-08	1.314E-08	6.294E-09	3.874E-09	2.682E-09
SE	5.291E-06	1.237E-06	3.843E-07	1.944E-07	1.207E-07	5.333E-08	1.880E-08	8.990E-09	5.523E-09	3.817E-09
SSE	4.959E-06	1.144E-06	3.647E-07	1.872E-07	1.175E-07	5.273E-08	1.903E-08	9.236E-09	5.708E-09	3.954E-09

VENTS GROUND LEVEL RELEASES - JAN-MAR 2012
8.000 DAY DECAY, DEPLETED
CORRECTED USING STANDARD OPEN TERRAIN FACTORS

ANNUAL AVERAGE CHI/Q (SEC/METER CUBED) DISTANCE IN MILES FROM THE SITE

SECTOR	.250	.500	.750	1.000	1.500	2.000	2.500	3.000	3.500	4.000	4.500
S	3.605E-05	1.098E-05	5.491E-06	2.660E-06	1.058E-06	5.670E-07	3.555E-07	2.455E-07	1.810E-07	1.398E-07	1.118E-07
SSW	1.924E-05	6.015E-06	3.087E-06	1.511E-06	5.945E-07	3.159E-07	1.969E-07	1.353E-07	9.933E-08	7.644E-08	6.094E-08
SW	8.129E-06	2.538E-06	1.276E-06	6.179E-07	2.435E-07	1.295E-07	8.079E-08	5.556E-08	4.081E-08	3.142E-08	2.506E-08
WSW	8.446E-06	2.707E-06	1.398E-06	6.854E-07	2.677E-07	1.415E-07	8.780E-08	6.011E-08	4.398E-08	3.375E-08	2.684E-08
W	1.232E-05	4.065E-06	2.075E-06	1.004E-06	3.854E-07	2.014E-07	1.239E-07	8.423E-08	6.128E-08	4.680E-08	3.706E-08
WNW	1.907E-05	5.916E-06	2.999E-06	1.460E-06	5.738E-07	3.048E-07	1.899E-07	1.305E-07	9.578E-08	7.371E-08	5.876E-08
NW	3.044E-05	9.531E-06	4.834E-06	2.347E-06	9.173E-07	4.854E-07	3.015E-07	2.067E-07	1.515E-07	1.164E-07	9.265E-08
NNW	6.785E-05	2.010E-05	1.009E-05	4.937E-06	2.009E-06	1.092E-06	6.918E-07	4.817E-07	3.574E-07	2.775E-07	2.230E-07
N	9.191E-05	2.741E-05	1.397E-05	6.881E-06	2.780E-06	1.504E-06	9.492E-07	6.590E-07	4.878E-07	3.781E-07	3.033E-07
NNE	4.702E-05	1.410E-05	7.208E-06	3.550E-06	1.429E-06	7.714E-07	4.862E-07	3.372E-07	2.493E-07	1.931E-07	1.548E-07
NE	2.247E-05	6.970E-06	3.665E-06	1.822E-06	7.203E-07	3.839E-07	2.397E-07	1.650E-07	1.213E-07	9.341E-08	7.453E-08
ENE	1.783E-05	5.449E-06	2.828E-06	1.399E-06	5.545E-07	2.961E-07	1.851E-07	1.276E-07	9.385E-08	7.236E-08	5.777E-08
E	1.735E-05	5.477E-06	2.879E-06	1.424E-06	5.554E-07	2.933E-07	1.819E-07	1.246E-07	9.114E-08	6.994E-08	5.563E-08
ESE	2.052E-05	6.739E-06	3.504E-06	1.710E-06	6.584E-07	3.448E-07	2.125E-07	1.448E-07	1.055E-07	8.068E-08	6.397E-08
SE	2.848E-05	9.253E-06	4.879E-06	2.409E-06	9.329E-07	4.902E-07	3.028E-07	2.066E-07	1.508E-07	1.154E-07	9.158E-08
SSE	2.826E-05	8.874E-06	4.519E-06	2.204E-06	8.687E-07	4.622E-07	2.883E-07	1.982E-07	1.456E-07	1.121E-07	8.939E-08

ANNUAL AVERAGE CHI/Q (SEC/METER CUBED) DISTANCE IN MILES FROM THE SITE

SECTOR	5.000	7.500	10.000	15.000	20.000	25.000	30.000	35.000	40.000	45.000	50.000
S	9.188E-08	4.589E-08	2.887E-08	1.571E-08	1.016E-08	7.208E-09	5.425E-09	4.253E-09	3.434E-09	2.837E-09	2.386E-09
SSW	4.994E-08	2.465E-08	1.538E-08	8.278E-09	5.309E-09	3.744E-09	2.804E-09	2.188E-09	1.761E-09	1.450E-09	1.216E-09
SW	2.054E-08	1.016E-08	6.351E-09	3.424E-09	2.198E-09	1.552E-09	1.163E-09	9.084E-10	7.313E-10	6.025E-10	5.055E-10
WSW	2.194E-08	1.074E-08	6.657E-09	3.546E-09	2.254E-09	1.579E-09	1.176E-09	9.135E-10	7.320E-10	6.006E-10	5.021E-10
W	3.019E-08	1.458E-08	8.964E-09	4.722E-09	2.982E-09	2.079E-09	1.542E-09	1.195E-09	9.553E-10	7.823E-10	6.529E-10
WNW	4.816E-08	2.379E-08	1.486E-08	8.004E-09	5.141E-09	3.629E-09	2.721E-09	2.125E-09	1.711E-09	1.410E-09	1.183E-09
NW	7.585E-08	3.732E-08	2.325E-08	1.248E-08	8.001E-09	5.641E-09	4.223E-09	3.296E-09	2.652E-09	2.184E-09	1.831E-09
NNW	1.840E-07	9.311E-08	5.909E-08	3.249E-08	2.112E-08	1.504E-08	1.136E-08	8.921E-09	7.217E-09	5.971E-09	5.028E-09
N	2.498E-07	1.258E-07	7.956E-08	4.355E-08	2.823E-08	2.006E-08	1.512E-08	1.186E-08	9.589E-09	7.927E-09	6.671E-09
NNE	1.274E-07	6.404E-08	4.044E-08	2.210E-08	1.431E-08	1.017E-08	7.657E-09	6.006E-09	4.853E-09	4.010E-09	3.374E-09
NE	6.111E-08	3.023E-08	1.888E-08	1.017E-08	6.518E-09	4.594E-09	3.439E-09	2.683E-09	2.158E-09	1.777E-09	1.490E-09
ENE	4.741E-08	2.353E-08	1.473E-08	7.960E-09	5.116E-09	3.613E-09	2.709E-09	2.116E-09	1.704E-09	1.404E-09	1.178E-09
E	4.549E-08	2.230E-08	1.385E-08	7.403E-09	4.730E-09	3.327E-09	2.487E-09	1.939E-09	1.559E-09	1.283E-09	1.075E-09
ESE	5.219E-08	2.536E-08	1.566E-08	8.299E-09	5.270E-09	3.689E-09	2.747E-09	2.134E-09	1.711E-09	1.404E-09	1.175E-09
SE	7.474E-08	3.632E-08	2.241E-08	1.187E-08	7.530E-09	5.266E-09	3.917E-09	3.041E-09	2.436E-09	1.998E-09	1.670E-09
SSE	7.327E-08	3.620E-08	2.261E-08	1.217E-08	7.805E-09	5.504E-09	4.122E-09	3.218E-09	2.590E-09	2.133E-09	1.789E-09

CHI/Q (SEC/METER CUBED) FOR EACH SEGMENT
SEGMENT BOUNDARIES IN MILES FROM THE SITE

DIRECTION FROM SITE	.5-1	1-2	2-3	3-4	4-5	5-10	10-20	20-30	30-40	40-50
S	5.454E-06	1.196E-06	3.679E-07	1.837E-07	1.127E-07	4.854E-08	1.617E-08	7.282E-09	4.276E-09	2.847E-09
SSW	3.037E-06	6.743E-07	2.040E-07	1.009E-07	6.146E-08	2.615E-08	8.538E-09	3.785E-09	2.201E-09	1.455E-09
SW	1.264E-06	2.760E-07	8.369E-08	4.144E-08	2.527E-08	1.078E-08	3.530E-09	1.569E-09	9.137E-10	6.047E-10
WSW	1.372E-06	3.044E-07	9.105E-08	4.469E-08	2.707E-08	1.141E-08	3.663E-09	1.598E-09	9.194E-10	6.030E-10
W	2.041E-06	4.410E-07	1.287E-07	6.232E-08	3.740E-08	1.555E-08	4.891E-09	2.105E-09	1.203E-09	7.856E-10
WNW	2.963E-06	6.512E-07	1.968E-07	9.729E-08	5.926E-08	2.523E-08	8.254E-09	3.669E-09	2.138E-09	1.415E-09
NW	4.773E-06	1.043E-06	3.126E-07	1.539E-07	9.346E-08	3.963E-08	1.288E-08	5.703E-09	3.316E-09	2.192E-09
NNW	1.003E-05	2.252E-06	7.145E-07	3.625E-07	2.247E-07	9.818E-08	3.335E-08	1.519E-08	8.968E-09	5.991E-09
N	1.381E-05	3.124E-06	9.810E-07	4.949E-07	3.056E-07	1.328E-07	4.474E-08	2.026E-08	1.193E-08	7.954E-09
NNE	7.114E-06	1.608E-06	5.027E-07	2.530E-07	1.560E-07	6.764E-08	2.272E-08	1.027E-08	6.038E-09	4.024E-09
NE	3.580E-06	8.156E-07	2.483E-07	1.232E-07	7.515E-08	3.205E-08	1.048E-08	4.645E-09	2.699E-09	1.783E-09
ENE	2.775E-06	6.272E-07	1.917E-07	9.530E-08	5.826E-08	2.493E-08	8.201E-09	3.652E-09	2.129E-09	1.410E-09
E	2.810E-06	6.320E-07	1.887E-07	9.261E-08	5.612E-08	2.370E-08	7.647E-09	3.365E-09	1.950E-09	1.288E-09
ESE	3.426E-06	7.528E-07	2.207E-07	1.073E-07	6.456E-08	2.701E-08	8.588E-09	3.734E-09	2.148E-09	1.410E-09
SE	4.753E-06	1.064E-06	3.143E-07	1.533E-07	9.240E-08	3.868E-08	1.229E-08	5.330E-09	3.061E-09	2.006E-09
SSE	4.458E-06	9.847E-07	2.987E-07	1.479E-07	9.014E-08	3.840E-08	1.255E-08	5.565E-09	3.237E-09	2.141E-09

VENTS GROUND LEVEL RELEASES - JAN-MAR 2012
CORRECTED USING STANDARD OPEN TERRAIN FACTORS

********** RELATIVE DEPOSITION PER UNIT AREA (M**-2) AT FIXED POINTS BY DOWNWIND SECTORS **********

DIRECTION FROM SITE	.25	.50	.75	1.00	1.50	2.00	2.50	3.00	3.50	4.00	4.50
					DISTANCES IN MILES						
S	1.857E-07	6.279E-08	3.224E-08	1.533E-08	5.506E-09	2.730E-09	1.608E-09	1.053E-09	7.407E-10	5.490E-10	4.230E-10
SSW	7.639E-08	2.583E-08	1.326E-08	6.306E-09	2.265E-09	1.123E-09	6.614E-10	4.331E-10	3.047E-10	2.258E-10	1.740E-10
SW	3.290E-08	1.112E-08	5.712E-09	2.715E-09	9.754E-10	4.837E-10	2.848E-10	1.865E-10	1.312E-10	9.725E-11	7.495E-11
WSW	3.077E-08	1.040E-08	5.342E-09	2.540E-09	9.123E-10	4.524E-10	2.664E-10	1.744E-10	1.227E-10	9.096E-11	7.010E-11
W	7.426E-08	2.511E-08	1.289E-08	6.129E-09	2.202E-09	1.092E-09	6.429E-10	4.210E-10	2.962E-10	2.195E-10	1.692E-10
WNW	8.276E-08	2.799E-08	1.437E-08	6.831E-09	2.454E-09	1.217E-09	7.166E-10	4.692E-10	3.301E-10	2.447E-10	1.885E-10
NW	1.655E-07	5.597E-08	2.874E-08	1.366E-08	4.907E-09	2.434E-09	1.433E-09	9.383E-10	6.602E-10	4.893E-10	3.770E-10
NNW	2.208E-07	7.466E-08	3.833E-08	1.822E-08	6.546E-09	3.247E-09	1.912E-09	1.252E-09	8.808E-10	6.527E-10	5.030E-10
N	3.502E-07	1.184E-07	6.080E-08	2.890E-08	1.038E-08	5.149E-09	3.032E-09	1.985E-09	1.397E-09	1.035E-09	7.978E-10
NNE	2.027E-07	6.853E-08	3.519E-08	1.673E-08	6.009E-09	2.980E-09	1.755E-09	1.149E-09	8.084E-10	5.991E-10	4.617E-10
NE	1.209E-07	4.089E-08	2.100E-08	9.981E-09	3.585E-09	1.778E-09	1.047E-09	6.855E-10	4.824E-10	3.575E-10	2.755E-10
ENE	8.805E-08	2.977E-08	1.529E-08	7.268E-09	2.611E-09	1.295E-09	7.623E-10	4.992E-10	3.512E-10	2.603E-10	2.006E-10
E	1.124E-07	3.801E-08	1.952E-08	9.279E-09	3.333E-09	1.653E-09	9.733E-10	6.373E-10	4.484E-10	3.323E-10	2.561E-10
ESE	1.538E-07	5.200E-08	2.670E-08	1.269E-08	4.560E-09	2.261E-09	1.332E-09	8.719E-10	6.135E-10	4.546E-10	3.504E-10
SE	2.344E-07	7.926E-08	4.070E-08	1.935E-08	6.949E-09	3.446E-09	2.029E-09	1.329E-09	9.350E-10	6.929E-10	5.340E-10
SSE	1.846E-07	6.242E-08	3.205E-08	1.524E-08	5.473E-09	2.714E-09	1.598E-09	1.046E-09	7.363E-10	5.457E-10	4.205E-10

DIRECTION FROM SITE	5.00	7.50	10.00	15.00	20.00	25.00	30.00	35.00	40.00	45.00	50.00
					DISTANCES IN MILES						
S	3.361E-10	1.493E-10	9.044E-11	4.571E-11	2.767E-11	1.855E-11	1.329E-11	9.981E-12	7.760E-12	6.199E-12	5.060E-12
SSW	1.383E-10	6.142E-11	3.721E-11	1.881E-11	1.138E-11	7.631E-12	5.468E-12	4.106E-12	3.193E-12	2.550E-12	2.082E-12
SW	5.954E-11	2.645E-11	1.602E-11	8.098E-12	4.902E-12	3.286E-12	2.355E-12	1.768E-12	1.375E-12	1.098E-12	8.964E-13
WSW	5.569E-11	2.474E-11	1.499E-11	7.574E-12	4.584E-12	3.074E-12	2.202E-12	1.654E-12	1.286E-12	1.027E-12	8.384E-13
W	1.344E-10	5.970E-11	3.617E-11	1.828E-11	1.106E-11	7.418E-12	5.315E-12	3.991E-12	3.103E-12	2.479E-12	2.023E-12
WNW	1.498E-10	6.654E-11	4.031E-11	2.037E-11	1.233E-11	8.268E-12	5.924E-12	4.449E-12	3.459E-12	2.763E-12	2.255E-12
NW	2.995E-10	1.331E-10	8.060E-11	4.074E-11	2.466E-11	1.653E-11	1.185E-11	8.896E-12	6.917E-12	5.525E-12	4.510E-12
NNW	3.996E-10	1.775E-10	1.075E-10	5.435E-11	3.290E-11	2.206E-11	1.580E-11	1.187E-11	9.227E-12	7.371E-12	6.016E-12
N	6.338E-10	2.815E-10	1.705E-10	8.620E-11	5.217E-11	3.498E-11	2.507E-11	1.882E-11	1.463E-11	1.169E-11	9.542E-12
NNE	3.668E-10	1.629E-10	9.870E-11	4.989E-11	3.020E-11	2.025E-11	1.451E-11	1.089E-11	8.470E-12	6.766E-12	5.522E-12
NE	2.189E-10	9.722E-11	5.889E-11	2.977E-11	1.802E-11	1.208E-11	8.656E-12	6.500E-12	5.054E-12	4.037E-12	3.295E-12
ENE	1.594E-10	7.079E-11	4.288E-11	2.168E-11	1.312E-11	8.796E-12	6.303E-12	4.733E-12	3.680E-12	2.939E-12	2.399E-12
E	2.035E-10	9.038E-11	5.475E-11	2.767E-11	1.675E-11	1.123E-11	8.047E-12	6.042E-12	4.698E-12	3.753E-12	3.063E-12
ESE	2.783E-10	1.236E-10	7.490E-11	3.786E-11	2.291E-11	1.536E-11	1.101E-11	8.266E-12	6.427E-12	5.134E-12	4.191E-12
SE	4.242E-10	1.884E-10	1.142E-10	5.770E-11	3.492E-11	2.341E-11	1.678E-11	1.260E-11	9.795E-12	7.825E-12	6.387E-12
SSE	3.341E-10	1.484E-10	8.990E-11	4.544E-11	2.750E-11	1.844E-11	1.321E-11	9.922E-12	7.714E-12	6.162E-12	5.030E-12

********** RELATIVE DEPOSITION PER UNIT AREA (M**-2) BY DOWNWIND SECTORS **********

DIRECTION FROM SITE	.5-1	1-2	2-3	3-4	4-5	5-10	10-20	20-30	30-40	40-50
					SEGMENT BOUNDARIES IN MILES					
S	3.151E-08	6.455E-09	1.685E-09	7.568E-10	4.281E-10	1.646E-10	4.763E-11	1.888E-11	1.008E-11	6.240E-12
SSW	1.296E-08	2.655E-09	6.932E-10	3.113E-10	1.761E-10	6.773E-11	1.960E-11	7.766E-12	4.147E-12	2.567E-12
SW	5.583E-09	1.144E-09	2.985E-10	1.341E-10	7.585E-11	2.917E-11	8.438E-12	3.344E-12	1.786E-12	1.105E-12
WSW	5.222E-09	1.070E-09	2.792E-10	1.254E-10	7.094E-11	2.728E-11	7.892E-12	3.128E-12	1.670E-12	1.034E-12
W	1.260E-08	2.581E-09	6.738E-10	3.026E-10	1.712E-10	6.584E-11	1.905E-11	7.549E-12	4.031E-12	2.495E-12
WNW	1.405E-08	2.877E-09	7.510E-10	3.373E-10	1.908E-10	7.338E-11	2.123E-11	8.414E-12	4.493E-12	2.781E-12
NW	2.809E-08	5.753E-09	1.502E-09	6.745E-10	3.816E-10	1.467E-10	4.245E-11	1.683E-11	8.985E-12	5.561E-12
NNW	3.747E-08	7.675E-09	2.004E-09	8.999E-10	5.091E-10	1.958E-10	5.663E-11	2.245E-11	1.199E-11	7.419E-12
N	5.943E-08	1.217E-08	3.178E-09	1.427E-09	8.074E-10	3.105E-10	8.982E-11	3.560E-11	1.901E-11	1.177E-11
NNE	3.439E-08	7.045E-09	1.839E-09	8.260E-10	4.673E-10	1.797E-10	5.198E-11	2.060E-11	1.100E-11	6.810E-12
NE	2.052E-08	4.203E-09	1.097E-09	4.928E-10	2.788E-10	1.072E-10	3.102E-11	1.229E-11	6.565E-12	4.063E-12
ENE	1.494E-08	3.061E-09	7.990E-10	3.589E-10	2.030E-10	7.807E-11	2.259E-11	8.951E-12	4.780E-12	2.959E-12
E	1.908E-08	3.908E-09	1.020E-09	4.582E-10	2.592E-10	9.968E-11	2.884E-11	1.143E-11	6.103E-12	3.778E-12
ESE	2.610E-08	5.346E-09	1.396E-09	6.268E-10	3.546E-10	1.364E-10	3.945E-11	1.563E-11	8.349E-12	5.168E-12
SE	3.978E-08	8.148E-09	2.127E-09	9.553E-10	5.404E-10	2.078E-10	6.012E-11	2.383E-11	1.272E-11	7.876E-12
SSE	3.133E-08	6.417E-09	1.675E-09	7.523E-10	4.256E-10	1.637E-10	4.735E-11	1.877E-11	1.002E-11	6.203E-12

VENTS GROUND LEVEL RELEASES - JAN-MAR 2012
CORRECTED USING STANDARD OPEN TERRAIN FACTORS
SPECIFIC POINTS OF INTEREST

RELEASE ID	TYPE OF LOCATION	DIRECTION FROM SITE	DIST. (MI)	X/Q (SEC/M3) NO DECAY UNDEPLETED	X/Q (SEC/M3) 2.26 DAY DECAY UNDEPLETED	X/Q (SEC/M3) 8.0 DAY DECAY DEPLETED	D/Q (PER SQ.METER)
A	Site Boundary	S	.80	5.3E-06	5.3E-06	4.7E-06	2.7E-08
A	Site Boundary	SSW	.82	2.8E-06	2.7E-06	2.4E-06	1.0E-08
A	Site Boundary	SW	.97	7.5E-07	7.5E-07	6.6E-07	2.9E-09
A	Site Boundary	WSW	.93	9.4E-07	9.4E-07	8.3E-07	3.1E-09
A	Site Boundary	W	.91	1.4E-06	1.4E-06	1.3E-06	7.8E-09
A	Site Boundary	WNW	.94	1.9E-06	1.9E-06	1.7E-06	8.1E-09
A	Site Boundary	NW	.81	4.5E-06	4.5E-06	4.0E-06	2.3E-08
A	Site Boundary	NNW	.69	1.3E-05	1.3E-05	1.2E-05	4.4E-08
A	Site Boundary	N	.67	1.8E-05	1.8E-05	1.7E-05	7.3E-08
A	Site Boundary	NNE	.60	1.2E-05	1.1E-05	1.0E-05	5.1E-08
A	Site Boundary	NE	.62	5.4E-06	5.4E-06	4.9E-06	2.9E-08
A	Site Boundary	ENE	.59	4.6E-06	4.6E-06	4.2E-06	2.3E-08
A	Site Boundary	E	.53	5.5E-06	5.5E-06	5.0E-06	3.5E-08
A	Site Boundary	ESE	.54	6.6E-06	6.6E-06	6.0E-06	4.6E-08
A	Site Boundary	SE	.65	6.8E-06	6.8E-06	6.1E-06	5.2E-08
A	Site Boundary	SSE	.81	4.2E-06	4.2E-06	3.7E-06	2.6E-08
A	Nearest Res	SSW	3.00	1.7E-07	1.7E-07	1.4E-07	4.3E-10
A	Nearest Res	SW	1.30	3.9E-07	3.9E-07	3.4E-07	1.4E-09
A	Nearest Res	WSW	1.90	1.9E-07	1.9E-07	1.6E-07	5.1E-10
A	Nearest Res	W	2.90	1.1E-07	1.1E-07	9.0E-08	4.6E-10
A	Nearest Res	WNW	1.70	5.2E-07	5.1E-07	4.3E-07	1.8E-09
A	Nearest Res	NW	.90	3.5E-06	3.5E-06	3.1E-06	1.8E-08
A	Nearest Res	NNW	1.90	1.5E-06	1.5E-06	1.2E-06	3.7E-09
A	Nearest Res	N	3.00	8.3E-07	8.2E-07	6.6E-07	2.0E-09
A	Nearest Res	NNE	1.90	1.0E-06	1.0E-06	8.6E-07	3.4E-09
A	Nearest Res	NE	3.00	2.1E-07	2.1E-07	1.7E-07	6.9E-10
A	Nearest Res	ENE	1.70	5.0E-07	5.0E-07	4.2E-07	1.9E-09
A	Nearest Res	E	2.20	2.9E-07	2.9E-07	2.4E-07	1.3E-09
A	Nearest Res	ESE	2.30	3.1E-07	3.1E-07	2.5E-07	1.6E-09
A	Nearest Res	SE	3.00	2.6E-07	2.6E-07	2.1E-07	1.3E-09
A	Nearest Cow	NNW	3.50	4.6E-07	4.5E-07	3.6E-07	8.8E-10
A	Nearest Garde	SSW	3.00	1.7E-07	1.7E-07	1.4E-07	4.3E-10
A	Nearest Garde	SW	1.30	3.9E-07	3.9E-07	3.4E-07	1.4E-09
A	Nearest Garde	WSW	1.90	1.9E-07	1.9E-07	1.6E-07	5.1E-10
A	Nearest Garde	W	2.90	1.1E-07	1.1E-07	9.0E-08	4.6E-10
A	Nearest Garde	WNW	2.40	2.6E-07	2.5E-07	2.1E-07	7.9E-10
A	Nearest Garde	NW	2.90	2.8E-07	2.8E-07	2.2E-07	1.0E-09
A	Nearest Garde	NNW	2.80	6.9E-07	6.8E-07	5.5E-07	1.5E-09
A	Nearest Garde	ENE	1.70	5.0E-07	5.0E-07	4.2E-07	1.9E-09
A	Nearest Garde	E	2.20	2.9E-07	2.9E-07	2.4E-07	1.3E-09
A	Nearest Garde	ESE	2.30	3.1E-07	3.1E-07	2.5E-07	1.6E-09

Atmospheric Diffusion Estimates

Ground Level Releases

April-June 2012

VENTS GROUND LEVEL RELEASES - APR-JUN 2012
NO DECAY, UNDEPLETED
CORRECTED USING STANDARD OPEN TERRAIN FACTORS

ANNUAL AVERAGE CHI/Q (SEC/METER CUBED) DISTANCE IN MILES FROM THE SITE

SECTOR	.250	.500	.750	1.000	1.500	2.000	2.500	3.000	3.500	4.000	4.500
S	4.178E-05	1.366E-05	7.297E-06	3.657E-06	1.475E-06	8.014E-07	5.094E-07	3.565E-07	2.660E-07	2.079E-07	1.682E-07
SSW	1.520E-05	4.940E-06	2.604E-06	1.294E-06	5.114E-07	2.739E-07	1.722E-07	1.194E-07	8.850E-08	6.873E-08	5.529E-08
SW	1.074E-05	3.655E-06	1.922E-06	9.441E-07	3.647E-07	1.923E-07	1.195E-07	8.212E-08	6.036E-08	4.656E-08	3.724E-08
WSW	1.248E-05	4.355E-06	2.317E-06	1.142E-06	4.360E-07	2.277E-07	1.403E-07	9.576E-08	6.996E-08	5.367E-08	4.270E-08
W	7.610E-06	2.562E-06	1.376E-06	6.858E-07	2.666E-07	1.411E-07	8.791E-08	6.052E-08	4.456E-08	3.441E-08	2.755E-08
WNW	1.150E-05	3.938E-06	2.065E-06	1.016E-06	3.980E-07	2.119E-07	1.326E-07	9.158E-08	6.762E-08	5.236E-08	4.201E-08
NW	2.401E-05	8.178E-06	4.366E-06	2.168E-06	8.450E-07	4.480E-07	2.794E-07	1.925E-07	1.418E-07	1.096E-07	8.777E-08
NNW	4.118E-05	1.309E-05	6.838E-06	3.404E-06	1.390E-06	7.619E-07	4.874E-07	3.428E-07	2.569E-07	2.015E-07	1.635E-07
N	6.878E-05	2.162E-05	1.140E-05	5.719E-06	2.347E-06	1.290E-06	8.269E-07	5.825E-07	4.372E-07	3.433E-07	2.788E-07
NNE	3.877E-05	1.207E-05	6.530E-06	3.327E-06	1.364E-06	7.488E-07	4.795E-07	3.375E-07	2.531E-07	1.985E-07	1.611E-07
NE	1.873E-05	5.994E-06	3.189E-06	1.603E-06	6.515E-07	3.556E-07	2.268E-07	1.591E-07	1.190E-07	9.319E-08	7.550E-08
ENE	1.406E-05	4.470E-06	2.347E-06	1.172E-06	4.783E-07	2.620E-07	1.675E-07	1.178E-07	8.827E-08	6.922E-08	5.616E-08
E	1.014E-05	3.305E-06	1.738E-06	8.659E-07	3.524E-07	1.926E-07	1.229E-07	8.630E-08	6.458E-08	5.059E-08	4.100E-08
ESE	1.654E-05	5.101E-06	2.625E-06	1.303E-06	5.362E-07	2.954E-07	1.898E-07	1.340E-07	1.007E-07	7.919E-08	6.440E-08
SE	2.638E-05	8.376E-06	4.480E-06	2.261E-06	9.229E-07	5.052E-07	3.229E-07	2.269E-07	1.699E-07	1.332E-07	1.080E-07
SSE	4.639E-05	1.466E-05	7.742E-06	3.885E-06	1.591E-06	8.732E-07	5.592E-07	3.936E-07	2.952E-07	2.317E-07	1.881E-07

ANNUAL AVERAGE CHI/Q (SEC/METER CUBED) DISTANCE IN MILES FROM THE SITE

SECTOR	5.000	7.500	10.000	15.000	20.000	25.000	30.000	35.000	40.000	45.000	50.000
S	1.398E-07	7.297E-08	4.783E-08	2.790E-08	1.914E-08	1.431E-08	1.131E-08	9.268E-09	7.808E-09	6.715E-09	5.870E-09
SSW	4.576E-08	2.356E-08	1.530E-08	8.818E-09	6.002E-09	4.464E-09	3.510E-09	2.868E-09	2.409E-09	2.067E-09	1.803E-09
SW	3.065E-08	1.548E-08	9.917E-09	5.615E-09	3.784E-09	2.794E-09	2.183E-09	1.775E-09	1.484E-09	1.269E-09	1.103E-09
WSW	3.499E-08	1.733E-08	1.094E-08	6.063E-09	4.022E-09	2.931E-09	2.267E-09	1.826E-09	1.515E-09	1.285E-09	1.110E-09
W	2.269E-08	1.147E-08	7.350E-09	4.158E-09	2.798E-09	2.062E-09	1.609E-09	1.306E-09	1.090E-09	9.308E-10	8.082E-10
WNW	3.466E-08	1.763E-08	1.135E-08	6.457E-09	4.355E-09	3.217E-09	2.516E-09	2.046E-09	1.712E-09	1.464E-09	1.273E-09
NW	7.230E-08	3.653E-08	2.339E-08	1.322E-08	8.874E-09	6.530E-09	5.090E-09	4.127E-09	3.444E-09	2.938E-09	2.549E-09
NNW	1.362E-07	7.183E-08	4.741E-08	2.791E-08	1.926E-08	1.448E-08	1.148E-08	9.441E-09	7.977E-09	6.878E-09	6.027E-09
N	2.325E-07	1.229E-07	8.129E-08	4.796E-08	3.312E-08	2.491E-08	1.975E-08	1.625E-08	1.373E-08	1.184E-08	1.038E-08
NNE	1.343E-07	7.078E-08	4.670E-08	2.746E-08	1.893E-08	1.421E-08	1.125E-08	9.243E-09	7.800E-09	6.719E-09	5.881E-09
NE	6.282E-08	3.295E-08	2.167E-08	1.269E-08	8.722E-09	6.535E-09	5.168E-09	4.242E-09	3.577E-09	3.079E-09	2.694E-09
ENE	4.679E-08	2.468E-08	1.629E-08	9.595E-09	6.624E-09	4.979E-09	3.948E-09	3.248E-09	2.745E-09	2.367E-09	2.074E-09
E	3.412E-08	1.791E-08	1.179E-08	6.907E-09	4.748E-09	3.558E-09	2.814E-09	2.310E-09	1.949E-09	1.678E-09	1.468E-09
ESE	5.377E-08	2.859E-08	1.898E-08	1.128E-08	7.837E-09	5.922E-09	4.716E-09	3.893E-09	3.300E-09	2.853E-09	2.506E-09
SE	8.993E-08	4.730E-08	3.116E-08	1.829E-08	1.259E-08	9.444E-09	7.475E-09	6.139E-09	5.180E-09	4.461E-09	3.904E-09
SSE	1.568E-07	8.276E-08	5.467E-08	3.222E-08	2.224E-08	1.672E-08	1.326E-08	1.091E-08	9.215E-09	7.946E-09	6.962E-09

CHI/Q (SEC/METER CUBED) FOR EACH SEGMENT
SEGMENT BOUNDARIES IN MILES FROM THE SITE

DIRECTION FROM SITE	.5-1	1-2	2-3	3-4	4-5	5-10	10-20	20-30	30-40	40-50
S	7.093E-06	1.661E-06	5.261E-07	2.697E-07	1.694E-07	7.664E-08	2.843E-08	1.440E-08	9.294E-09	6.726E-09
SSW	2.541E-06	5.799E-07	1.782E-07	8.981E-08	5.574E-08	2.482E-08	9.007E-09	4.493E-09	2.877E-09	2.070E-09
SW	1.872E-06	4.168E-07	1.240E-07	6.132E-08	3.756E-08	1.638E-08	5.757E-09	2.814E-09	1.781E-09	1.271E-09
WSW	2.248E-06	5.003E-07	1.458E-07	7.112E-08	4.309E-08	1.842E-08	6.240E-09	2.956E-09	1.833E-09	1.289E-09
W	1.333E-06	3.040E-07	9.114E-08	4.525E-08	2.778E-08	1.213E-08	4.263E-09	2.077E-09	1.310E-09	9.327E-10
WNW	2.015E-06	4.526E-07	1.373E-07	6.865E-08	4.235E-08	1.862E-08	6.610E-09	3.240E-09	2.053E-09	1.466E-09
NW	4.236E-06	9.626E-07	2.896E-07	1.440E-07	8.851E-08	3.864E-08	1.355E-08	6.579E-09	4.142E-09	2.944E-09
NNW	6.700E-06	1.559E-06	5.027E-07	2.603E-07	1.647E-07	7.529E-08	2.840E-08	1.455E-08	9.465E-09	6.888E-09
N	1.115E-05	2.627E-06	8.526E-07	4.429E-07	2.808E-07	1.288E-07	4.877E-08	2.504E-08	1.629E-08	1.186E-08
NNE	6.339E-06	1.527E-06	4.945E-07	2.564E-07	1.623E-07	7.419E-08	2.794E-08	1.428E-08	9.267E-09	6.729E-09
NE	3.108E-06	7.315E-07	2.341E-07	1.206E-07	7.604E-08	3.457E-08	1.292E-08	6.571E-09	4.253E-09	3.084E-09
ENE	2.297E-06	5.363E-07	1.728E-07	8.945E-08	5.656E-08	2.586E-08	9.762E-09	5.005E-09	3.256E-09	2.370E-09
E	1.699E-06	3.955E-07	1.268E-07	6.546E-08	4.129E-08	1.879E-08	7.032E-09	3.578E-09	2.317E-09	1.681E-09
ESE	2.588E-06	5.995E-07	1.956E-07	1.020E-07	6.484E-08	2.991E-08	1.146E-08	5.950E-09	3.902E-09	2.857E-09
SE	4.360E-06	1.035E-06	3.331E-07	1.722E-07	1.088E-07	4.960E-08	1.862E-08	9.496E-09	6.155E-09	4.468E-09
SSE	7.565E-06	1.782E-06	5.767E-07	2.991E-07	1.894E-07	8.672E-08	3.278E-08	1.681E-08	1.093E-08	7.957E-09

VENTS GROUND LEVEL RELEASES - APR-JUN 2012
2.260 DAY DECAY, UNDEPLETED
CORRECTED USING STANDARD OPEN TERRAIN FACTORS

ANNUAL AVERAGE CHI/Q (SEC/METER CUBED) DISTANCE IN MILES FROM THE SITE

SECTOR	.250	.500	.750	1.000	1.500	2.000	2.500	3.000	3.500	4.000	4.500
S	4.174E-05	1.364E-05	7.278E-06	3.644E-06	1.467E-06	7.955E-07	5.047E-07	3.525E-07	2.626E-07	2.048E-07	1.653E-07
SSW	1.519E-05	4.932E-06	2.597E-06	1.290E-06	5.088E-07	2.720E-07	1.707E-07	1.181E-07	8.736E-08	6.771E-08	5.437E-08
SW	1.074E-05	3.649E-06	1.918E-06	9.412E-07	3.631E-07	1.912E-07	1.186E-07	8.135E-08	5.971E-08	4.598E-08	3.671E-08
WSW	1.247E-05	4.350E-06	2.313E-06	1.139E-06	4.342E-07	2.265E-07	1.394E-07	9.498E-08	6.928E-08	5.307E-08	4.217E-08
W	7.604E-06	2.558E-06	1.373E-06	6.837E-07	2.653E-07	1.402E-07	8.719E-08	5.993E-08	4.404E-08	3.396E-08	2.714E-08
WNW	1.149E-05	3.931E-06	2.060E-06	1.012E-06	3.959E-07	2.103E-07	1.313E-07	9.056E-08	6.673E-08	5.157E-08	4.129E-08
NW	2.399E-05	8.167E-06	4.358E-06	2.163E-06	8.416E-07	4.456E-07	2.775E-07	1.909E-07	1.405E-07	1.084E-07	8.667E-08
NNW	4.114E-05	1.306E-05	6.819E-06	3.392E-06	1.383E-06	7.559E-07	4.826E-07	3.387E-07	2.533E-07	1.983E-07	1.606E-07
N	6.871E-05	2.158E-05	1.137E-05	5.698E-06	2.334E-06	1.280E-06	8.188E-07	5.756E-07	4.311E-07	3.378E-07	2.738E-07
NNE	3.873E-05	1.205E-05	6.509E-06	3.313E-06	1.355E-06	7.422E-07	4.742E-07	3.330E-07	2.491E-07	1.950E-07	1.579E-07
NE	1.871E-05	5.981E-06	3.179E-06	1.596E-06	6.473E-07	3.525E-07	2.243E-07	1.570E-07	1.172E-07	9.152E-08	7.397E-08
ENE	1.405E-05	4.460E-06	2.339E-06	1.166E-06	4.749E-07	2.595E-07	1.655E-07	1.161E-07	8.677E-08	6.788E-08	5.493E-08
E	1.012E-05	3.297E-06	1.731E-06	8.617E-07	3.498E-07	1.907E-07	1.214E-07	8.501E-08	6.346E-08	4.958E-08	4.008E-08
ESE	1.652E-05	5.089E-06	2.616E-06	1.296E-06	5.323E-07	2.925E-07	1.875E-07	1.320E-07	9.894E-08	7.760E-08	6.295E-08
SE	2.635E-05	8.358E-06	4.466E-06	2.252E-06	9.170E-07	5.009E-07	3.194E-07	2.239E-07	1.673E-07	1.308E-07	1.059E-07
SSE	4.634E-05	1.463E-05	7.719E-06	3.870E-06	1.581E-06	8.661E-07	5.534E-07	3.887E-07	2.909E-07	2.278E-07	1.845E-07

ANNUAL AVERAGE CHI/Q (SEC/METER CUBED) DISTANCE IN MILES FROM THE SITE

SECTOR	5.000	7.500	10.000	15.000	20.000	25.000	30.000	35.000	40.000	45.000	50.000
S	1.371E-07	7.088E-08	4.600E-08	2.630E-08	1.767E-08	1.295E-08	1.003E-08	8.054E-09	6.648E-09	5.603E-09	4.799E-09
SSW	4.490E-08	2.289E-08	1.471E-08	8.304E-09	5.535E-09	4.031E-09	3.104E-09	2.482E-09	2.041E-09	1.715E-09	1.464E-09
SW	3.017E-08	1.511E-08	9.601E-09	5.346E-09	3.543E-09	2.572E-09	1.976E-09	1.580E-09	1.299E-09	1.092E-09	9.331E-10
WSW	3.450E-08	1.697E-08	1.063E-08	5.807E-09	3.796E-09	2.727E-09	2.078E-09	1.650E-09	1.349E-09	1.128E-09	9.608E-10
W	2.231E-08	1.118E-08	7.102E-09	3.948E-09	2.610E-09	1.890E-09	1.449E-09	1.156E-09	9.487E-10	7.958E-10	6.791E-10
WNW	3.400E-08	1.712E-08	1.091E-08	6.078E-09	4.015E-09	2.904E-09	2.223E-09	1.770E-09	1.450E-09	1.214E-09	1.033E-09
NW	7.129E-08	3.575E-08	2.273E-08	1.265E-08	8.365E-09	6.063E-09	4.654E-09	3.717E-09	3.055E-09	2.566E-09	2.194E-09
NNW	1.335E-07	6.962E-08	4.546E-08	2.619E-08	1.768E-08	1.299E-08	1.008E-08	8.107E-09	6.700E-09	5.651E-09	4.843E-09
N	2.278E-07	1.192E-07	7.802E-08	4.507E-08	3.048E-08	2.244E-08	1.742E-08	1.404E-08	1.161E-08	9.806E-09	8.414E-09
NNE	1.313E-07	6.840E-08	4.460E-08	2.563E-08	1.726E-08	1.265E-08	9.790E-09	7.859E-09	6.481E-09	5.455E-09	4.666E-09
NE	6.140E-08	3.183E-08	2.068E-08	1.183E-08	7.936E-09	5.804E-09	4.481E-09	3.590E-09	2.956E-09	2.484E-09	2.121E-09
ENE	4.565E-08	2.378E-08	1.550E-08	8.900E-09	5.990E-09	4.390E-09	3.394E-09	2.722E-09	2.242E-09	1.885E-09	1.611E-09
E	3.327E-08	1.724E-08	1.120E-08	6.394E-09	4.283E-09	3.126E-09	2.409E-09	1.927E-09	1.583E-09	1.328E-09	1.132E-09
ESE	5.242E-08	2.751E-08	1.803E-08	1.043E-08	7.063E-09	5.198E-09	4.032E-09	3.243E-09	2.677E-09	2.255E-09	1.929E-09
SE	8.795E-08	4.573E-08	2.978E-08	1.708E-08	1.149E-08	8.418E-09	6.509E-09	5.223E-09	4.306E-09	3.623E-09	3.098E-09
SSE	1.534E-07	8.012E-08	5.234E-08	3.016E-08	2.036E-08	1.496E-08	1.160E-08	9.326E-09	7.703E-09	6.493E-09	5.562E-09

CHI/Q (SEC/METER CUBED) FOR EACH SEGMENT
SEGMENT BOUNDARIES IN MILES FROM THE SITE

DIRECTION FROM SITE	.5-1	1-2	2-3	3-4	4-5	5-10	10-20	20-30	30-40	40-50
S	7.076E-06	1.652E-06	5.214E-07	2.662E-07	1.666E-07	7.454E-08	2.684E-08	1.304E-08	8.082E-09	5.615E-09
SSW	2.535E-06	5.772E-07	1.767E-07	8.867E-08	5.482E-08	2.415E-08	8.497E-09	4.061E-09	2.492E-09	1.719E-09
SW	1.869E-06	4.151E-07	1.230E-07	6.066E-08	3.704E-08	1.601E-08	5.491E-09	2.593E-09	1.586E-09	1.094E-09
WSW	2.244E-06	4.985E-07	1.448E-07	7.045E-08	4.256E-08	1.805E-08	5.986E-09	2.753E-09	1.658E-09	1.132E-09
W	1.330E-06	3.027E-07	9.042E-08	4.474E-08	2.737E-08	1.184E-08	4.055E-09	1.906E-09	1.161E-09	7.979E-10
WNW	2.010E-06	4.504E-07	1.361E-07	6.776E-08	4.164E-08	1.811E-08	6.234E-09	2.928E-09	1.778E-09	1.217E-09
NW	4.229E-06	9.591E-07	2.877E-07	1.427E-07	8.741E-08	3.786E-08	1.299E-08	6.113E-09	3.732E-09	2.573E-09
NNW	6.683E-06	1.551E-06	4.979E-07	2.567E-07	1.617E-07	7.307E-08	2.669E-08	1.308E-08	8.134E-09	5.663E-09
N	1.112E-05	2.613E-06	8.445E-07	4.369E-07	2.758E-07	1.251E-07	4.591E-08	2.257E-08	1.408E-08	9.826E-09
NNE	6.319E-06	1.518E-06	4.892E-07	2.524E-07	1.590E-07	7.179E-08	2.612E-08	1.274E-08	7.886E-09	5.467E-09
NE	3.098E-06	7.272E-07	2.316E-07	1.188E-07	7.451E-08	3.344E-08	1.206E-08	5.843E-09	3.603E-09	2.489E-09
ENE	2.289E-06	5.328E-07	1.708E-07	8.795E-08	5.533E-08	2.496E-08	9.073E-09	4.418E-09	2.731E-09	1.889E-09
E	1.693E-06	3.928E-07	1.253E-07	6.433E-08	4.037E-08	1.812E-08	6.523E-09	3.148E-09	1.934E-09	1.331E-09
ESE	2.579E-06	5.955E-07	1.933E-07	1.002E-07	6.339E-08	2.883E-08	1.062E-08	5.229E-09	3.253E-09	2.259E-09
SE	4.347E-06	1.029E-06	3.296E-07	1.696E-07	1.066E-07	4.802E-08	1.742E-08	8.473E-09	5.241E-09	3.631E-09
SSE	7.544E-06	1.772E-06	5.709E-07	2.948E-07	1.858E-07	8.406E-08	3.073E-08	1.505E-08	9.356E-09	6.507E-09

VENTS GROUND LEVEL RELEASES - APR-JUN 2012
8.000 DAY DECAY, DEPLETED
CORRECTED USING STANDARD OPEN TERRAIN FACTORS

ANNUAL AVERAGE CHI/Q (SEC/METER CUBED) DISTANCE IN MILES FROM THE SITE

SECTOR	.250	.500	.750	1.000	1.500	2.000	2.500	3.000	3.500	4.000	4.500
S	3.953E-05	1.247E-05	6.498E-06	3.198E-06	1.251E-06	6.622E-07	4.115E-07	2.822E-07	2.068E-07	1.589E-07	1.266E-07
SSW	1.439E-05	4.509E-06	2.319E-06	1.132E-06	4.337E-07	2.263E-07	1.391E-07	9.458E-08	6.880E-08	5.254E-08	4.161E-08
SW	1.017E-05	3.336E-06	1.712E-06	8.257E-07	3.093E-07	1.590E-07	9.660E-08	6.505E-08	4.695E-08	3.562E-08	2.804E-08
WSW	1.180E-05	3.976E-06	2.064E-06	9.990E-07	3.698E-07	1.883E-07	1.135E-07	7.589E-08	5.444E-08	4.107E-08	3.217E-08
W	7.200E-06	2.339E-06	1.225E-06	5.998E-07	2.261E-07	1.166E-07	7.105E-08	4.794E-08	3.465E-08	2.632E-08	2.074E-08
WNW	1.088E-05	3.595E-06	1.839E-06	8.884E-07	3.375E-07	1.751E-07	1.071E-07	7.252E-08	5.257E-08	4.002E-08	3.161E-08
NW	2.272E-05	7.465E-06	3.889E-06	1.897E-06	7.168E-07	3.704E-07	2.259E-07	1.526E-07	1.104E-07	8.387E-08	6.613E-08
NNW	3.897E-05	1.194E-05	6.089E-06	2.977E-06	1.179E-06	6.295E-07	3.937E-07	2.713E-07	1.997E-07	1.540E-07	1.230E-07
N	6.507E-05	1.973E-05	1.015E-05	5.001E-06	1.990E-06	1.066E-06	6.680E-07	4.612E-07	3.398E-07	2.623E-07	2.097E-07
NNE	3.668E-05	1.102E-05	5.814E-06	2.909E-06	1.156E-06	6.185E-07	3.872E-07	2.670E-07	1.966E-07	1.516E-07	1.211E-07
NE	1.772E-05	5.470E-06	2.840E-06	1.402E-06	5.523E-07	2.938E-07	1.832E-07	1.259E-07	9.247E-08	7.117E-08	5.675E-08
ENE	1.331E-05	4.079E-06	2.089E-06	1.024E-06	4.054E-07	2.163E-07	1.352E-07	9.317E-08	6.854E-08	5.284E-08	4.220E-08
E	9.589E-06	3.016E-06	1.547E-06	7.569E-07	2.987E-07	1.590E-07	9.922E-08	6.826E-08	5.014E-08	3.861E-08	3.080E-08
ESE	1.565E-05	4.655E-06	2.337E-06	1.139E-06	4.545E-07	2.440E-07	1.532E-07	1.060E-07	7.819E-08	6.044E-08	4.838E-08
SE	2.496E-05	7.644E-06	3.988E-06	1.977E-06	7.824E-07	4.173E-07	2.607E-07	1.795E-07	1.320E-07	1.017E-07	8.120E-08
SSE	4.389E-05	1.338E-05	6.894E-06	3.397E-06	1.349E-06	7.214E-07	4.517E-07	3.115E-07	2.294E-07	1.770E-07	1.414E-07

ANNUAL AVERAGE CHI/Q (SEC/METER CUBED) DISTANCE IN MILES FROM THE SITE

SECTOR	5.000	7.500	10.000	15.000	20.000	25.000	30.000	35.000	40.000	45.000	50.000
S	1.036E-07	5.102E-08	3.178E-08	1.706E-08	1.093E-08	7.699E-09	5.762E-09	4.496E-09	3.616E-09	2.977E-09	2.497E-09
SSW	3.393E-08	1.648E-08	1.017E-08	5.390E-09	3.425E-09	2.400E-09	1.788E-09	1.390E-09	1.114E-09	9.149E-10	7.654E-10
SW	2.275E-08	1.084E-08	6.602E-09	3.443E-09	2.169E-09	1.510E-09	1.119E-09	8.667E-10	6.928E-10	5.674E-10	4.737E-10
WSW	2.598E-08	1.215E-08	7.292E-09	3.724E-09	2.311E-09	1.589E-09	1.166E-09	8.955E-10	7.106E-10	5.783E-10	4.800E-10
W	1.683E-08	8.028E-09	4.890E-09	2.548E-09	1.602E-09	1.113E-09	8.236E-10	6.367E-10	5.081E-10	4.156E-10	3.464E-10
WNW	2.570E-08	1.232E-08	7.538E-09	3.947E-09	2.485E-09	1.729E-09	1.281E-09	9.911E-10	7.916E-10	6.478E-10	5.403E-10
NW	5.368E-08	2.559E-08	1.559E-08	8.118E-09	5.096E-09	3.538E-09	2.617E-09	2.022E-09	1.614E-09	1.320E-09	1.100E-09
NNW	1.010E-07	5.019E-08	3.147E-08	1.705E-08	1.098E-08	7.767E-09	5.833E-09	4.564E-09	3.680E-09	3.036E-09	2.551E-09
N	1.723E-07	8.592E-08	5.398E-08	2.930E-08	1.889E-08	1.338E-08	1.005E-08	7.870E-09	6.349E-09	5.240E-09	4.404E-09
NNE	9.945E-08	4.942E-08	3.097E-08	1.674E-08	1.077E-08	7.607E-09	5.704E-09	4.456E-09	3.588E-09	2.957E-09	2.481E-09
NE	4.652E-08	2.300E-08	1.437E-08	7.734E-09	4.959E-09	3.496E-09	2.617E-09	2.042E-09	1.643E-09	1.352E-09	1.134E-09
ENE	3.464E-08	1.721E-08	1.079E-08	5.841E-09	3.760E-09	2.658E-09	1.995E-09	1.560E-09	1.257E-09	1.036E-09	8.697E-10
E	2.525E-08	1.249E-08	7.804E-09	4.202E-09	2.693E-09	1.898E-09	1.420E-09	1.108E-09	8.910E-10	7.333E-10	6.146E-10
ESE	3.979E-08	1.993E-08	1.257E-08	6.859E-09	4.444E-09	3.158E-09	2.379E-09	1.866E-09	1.508E-09	1.246E-09	1.049E-09
SE	6.661E-08	3.303E-08	2.067E-08	1.116E-08	7.165E-09	5.058E-09	3.790E-09	2.960E-09	2.383E-09	1.963E-09	1.647E-09
SSE	1.161E-07	5.781E-08	3.628E-08	1.966E-08	1.267E-08	8.964E-09	6.732E-09	5.267E-09	4.246E-09	3.503E-09	2.942E-09

CHI/Q (SEC/METER CUBED) FOR EACH SEGMENT
SEGMENT BOUNDARIES IN MILES FROM THE SITE

DIRECTION FROM SITE	.5-1	1-2	2-3	3-4	4-5	5-10	10-20	20-30	30-40	40-50
S	6.358E-06	1.422E-06	4.267E-07	2.101E-07	1.277E-07	5.416E-08	1.761E-08	7.785E-09	4.522E-09	2.989E-09
SSW	2.278E-06	4.967E-07	1.446E-07	6.997E-08	4.200E-08	1.755E-08	5.579E-09	2.428E-09	1.398E-09	9.186E-10
SW	1.679E-06	3.573E-07	1.006E-07	4.781E-08	2.833E-08	1.160E-08	3.579E-09	1.530E-09	8.727E-10	5.699E-10
WSW	2.015E-06	4.290E-07	1.184E-07	5.547E-08	3.251E-08	1.306E-08	3.889E-09	1.612E-09	9.025E-10	5.811E-10
W	1.195E-06	2.605E-07	7.396E-08	3.527E-08	2.095E-08	8.590E-09	2.648E-09	1.128E-09	6.411E-10	4.174E-10
WNW	1.807E-06	3.878E-07	1.114E-07	5.349E-08	3.191E-08	1.317E-08	4.095E-09	1.752E-09	9.980E-10	6.506E-10
NW	3.798E-06	8.250E-07	2.351E-07	1.123E-07	6.677E-08	2.739E-08	8.435E-09	3.585E-09	2.036E-09	1.325E-09
NNW	6.007E-06	1.334E-06	4.076E-07	2.027E-07	1.240E-07	5.315E-08	1.756E-08	7.850E-09	4.590E-09	3.047E-09
N	9.991E-06	2.248E-06	6.913E-07	3.450E-07	2.115E-07	9.092E-08	3.016E-08	1.352E-08	7.914E-09	5.259E-09
NNE	5.680E-06	1.307E-06	4.008E-07	1.996E-07	1.221E-07	5.234E-08	1.725E-08	7.688E-09	4.482E-09	2.968E-09
NE	2.785E-06	6.261E-07	1.898E-07	9.391E-08	5.724E-08	2.439E-08	7.974E-09	3.535E-09	2.055E-09	1.358E-09
ENE	2.058E-06	4.589E-07	1.400E-07	6.960E-08	4.255E-08	1.823E-08	6.016E-09	2.687E-09	1.569E-09	1.040E-09
E	1.522E-06	3.384E-07	1.028E-07	5.093E-08	3.106E-08	1.324E-08	4.332E-09	1.919E-09	1.115E-09	7.360E-10
ESE	2.320E-06	5.130E-07	1.585E-07	7.936E-08	4.877E-08	2.107E-08	7.054E-09	3.189E-09	1.876E-09	1.251E-09
SE	3.907E-06	8.856E-07	2.700E-07	1.341E-07	8.188E-08	3.500E-08	1.150E-08	5.113E-09	2.978E-09	1.970E-09
SSE	6.781E-06	1.525E-06	4.675E-07	2.329E-07	1.426E-07	6.120E-08	2.025E-08	9.059E-09	5.296E-09	3.515E-09

VENTS GROUND LEVEL RELEASES - APR-JUN 2012
CORRECTED USING STANDARD OPEN TERRAIN FACTORS

********** RELATIVE DEPOSITION PER UNIT AREA (M**-2) AT FIXED POINTS BY DOWNWIND SECTORS **********

DIRECTION FROM SITE	.25	.50	.75	1.00	1.50	2.00	2.50	3.00	3.50	4.00	4.50
					DISTANCES IN MILES						
S	2.280E-07	7.710E-08	3.959E-08	1.882E-08	6.760E-09	3.353E-09	1.974E-09	1.293E-09	9.095E-10	6.740E-10	5.194E-10
SSW	9.650E-08	3.263E-08	1.676E-08	7.966E-09	2.861E-09	1.419E-09	8.355E-10	5.471E-10	3.850E-10	2.853E-10	2.198E-10
SW	7.741E-08	2.618E-08	1.344E-08	6.390E-09	2.295E-09	1.138E-09	6.702E-10	4.389E-10	3.088E-10	2.289E-10	1.764E-10
WSW	1.060E-07	3.586E-08	1.841E-08	8.753E-09	3.144E-09	1.559E-09	9.181E-10	6.012E-10	4.230E-10	3.135E-10	2.416E-10
W	5.620E-08	1.901E-08	9.758E-09	4.639E-09	1.666E-09	8.264E-10	4.866E-10	3.186E-10	2.242E-10	1.662E-10	1.280E-10
WNW	7.635E-08	2.582E-08	1.326E-08	6.302E-09	2.264E-09	1.123E-09	6.611E-10	4.329E-10	3.046E-10	2.257E-10	1.739E-10
NW	2.280E-07	7.710E-08	3.959E-08	1.882E-08	6.760E-09	3.353E-09	1.974E-09	1.293E-09	9.095E-10	6.740E-10	5.194E-10
NNW	2.694E-07	9.108E-08	4.677E-08	2.223E-08	7.986E-09	3.961E-09	2.332E-09	1.527E-09	1.074E-09	7.963E-10	6.136E-10
N	4.337E-07	1.467E-07	7.531E-08	3.580E-08	1.286E-08	6.378E-09	3.755E-09	2.459E-09	1.730E-09	1.282E-09	9.881E-10
NNE	1.569E-07	5.307E-08	2.725E-08	1.296E-08	4.653E-09	2.308E-09	1.359E-09	8.898E-10	6.261E-10	4.640E-10	3.576E-10
NE	8.590E-08	2.905E-08	1.491E-08	7.090E-09	2.547E-09	1.263E-09	7.437E-10	4.870E-10	3.427E-10	2.539E-10	1.957E-10
ENE	5.302E-08	1.793E-08	9.206E-09	4.377E-09	1.572E-09	7.797E-10	4.591E-10	3.006E-10	2.115E-10	1.568E-10	1.208E-10
E	3.606E-08	1.219E-08	6.260E-09	2.976E-09	1.069E-09	5.302E-10	3.122E-10	2.044E-10	1.438E-10	1.066E-10	8.214E-11
ESE	6.575E-08	2.223E-08	1.142E-08	5.427E-09	1.949E-09	9.668E-10	5.693E-10	3.727E-10	2.623E-10	1.944E-10	1.498E-10
SE	1.198E-07	4.052E-08	2.081E-08	9.891E-09	3.553E-09	1.762E-09	1.038E-09	6.794E-10	4.780E-10	3.543E-10	2.730E-10
SSE	2.269E-07	7.674E-08	3.940E-08	1.873E-08	6.729E-09	3.337E-09	1.965E-09	1.287E-09	9.053E-10	6.709E-10	5.170E-10

DIRECTION FROM SITE	5.00	7.50	10.00	15.00	20.00	25.00	30.00	35.00	40.00	45.00	50.00
					DISTANCES IN MILES						
S	4.127E-10	1.833E-10	1.110E-10	5.613E-11	3.397E-11	2.278E-11	1.632E-11	1.226E-11	9.529E-12	7.612E-12	6.213E-12
SSW	1.747E-10	7.759E-11	4.700E-11	2.376E-11	1.438E-11	9.640E-12	6.908E-12	5.187E-12	4.033E-12	3.222E-12	2.630E-12
SW	1.401E-10	6.224E-11	3.770E-11	1.906E-11	1.153E-11	7.733E-12	5.541E-12	4.161E-12	3.235E-12	2.584E-12	2.109E-12
WSW	1.919E-10	8.526E-11	5.165E-11	2.611E-11	1.580E-11	1.059E-11	7.591E-12	5.700E-12	4.432E-12	3.540E-12	2.890E-12
W	1.017E-10	4.519E-11	2.737E-11	1.384E-11	8.374E-12	5.615E-12	4.023E-12	3.021E-12	2.349E-12	1.876E-12	1.532E-12
WNW	1.382E-10	6.139E-11	3.719E-11	1.880E-11	1.138E-11	7.628E-12	5.466E-12	4.104E-12	3.191E-12	2.549E-12	2.081E-12
NW	4.127E-10	1.833E-10	1.110E-10	5.613E-11	3.397E-11	2.278E-11	1.632E-11	1.226E-11	9.529E-12	7.612E-12	6.213E-12
NNW	4.875E-10	2.166E-10	1.312E-10	6.631E-11	4.013E-11	2.691E-11	1.928E-11	1.448E-11	1.126E-11	8.992E-12	7.340E-12
N	7.850E-10	3.487E-10	2.112E-10	1.068E-10	6.462E-11	4.333E-11	3.105E-11	2.331E-11	1.813E-11	1.448E-11	1.182E-11
NNE	2.841E-10	1.262E-10	7.644E-11	3.864E-11	2.338E-11	1.568E-11	1.123E-11	8.436E-12	6.559E-12	5.240E-12	4.277E-12
NE	1.555E-10	6.906E-11	4.184E-11	2.115E-11	1.280E-11	8.581E-12	6.149E-12	4.617E-12	3.590E-12	2.868E-12	2.341E-12
ENE	9.597E-11	4.263E-11	2.582E-11	1.305E-11	7.900E-12	5.297E-12	3.795E-12	2.850E-12	2.216E-12	1.770E-12	1.445E-12
E	6.526E-11	2.899E-11	1.756E-11	8.876E-12	5.372E-12	3.602E-12	2.581E-12	1.938E-12	1.507E-12	1.204E-12	9.825E-13
ESE	1.190E-10	5.286E-11	3.202E-11	1.619E-11	9.796E-12	6.568E-12	4.706E-12	3.534E-12	2.748E-12	2.195E-12	1.792E-12
SE	2.169E-10	9.635E-11	5.836E-11	2.950E-11	1.785E-11	1.197E-11	8.578E-12	6.441E-12	5.008E-12	4.000E-12	3.265E-12
SSE	4.107E-10	1.825E-10	1.105E-10	5.587E-11	3.381E-11	2.267E-11	1.624E-11	1.220E-11	9.484E-12	7.576E-12	6.184E-12

********** RELATIVE DEPOSITION PER UNIT AREA (M**-2) BY DOWNWIND SECTORS **********

DIRECTION FROM SITE	.5-1	1-2	2-3	3-4	4-5	5-10	10-20	20-30	30-40	40-50
					SEGMENT BOUNDARIES IN MILES					
S	3.869E-08	7.926E-09	2.069E-09	9.293E-10	5.257E-10	2.022E-10	5.848E-11	2.318E-11	1.238E-11	7.661E-12
SSW	1.638E-08	3.355E-09	8.757E-10	3.933E-10	2.225E-10	8.556E-11	2.475E-11	9.811E-12	5.239E-12	3.243E-12
SW	1.314E-08	2.691E-09	7.025E-10	3.155E-10	1.785E-10	6.864E-11	1.986E-11	7.870E-12	4.203E-12	2.601E-12
WSW	1.800E-08	3.686E-09	9.623E-10	4.322E-10	2.445E-10	9.403E-11	2.720E-11	1.078E-11	5.757E-12	3.563E-12
W	9.538E-09	1.954E-09	5.100E-10	2.291E-10	1.296E-10	4.983E-11	1.442E-11	5.714E-12	3.051E-12	1.889E-12
WNW	1.296E-08	2.654E-09	6.929E-10	3.112E-10	1.760E-10	6.770E-11	1.959E-11	7.762E-12	4.145E-12	2.566E-12
NW	3.869E-08	7.926E-09	2.069E-09	9.293E-10	5.257E-10	2.022E-10	5.848E-11	2.318E-11	1.238E-11	7.661E-12
NNW	4.571E-08	9.363E-09	2.444E-09	1.098E-09	6.210E-10	2.388E-10	6.909E-11	2.738E-11	1.462E-11	9.051E-12
N	7.361E-08	1.508E-08	3.936E-09	1.768E-09	1.000E-09	3.846E-10	1.113E-10	4.409E-11	2.355E-11	1.457E-11
NNE	2.664E-08	5.456E-09	1.424E-09	6.397E-10	3.619E-10	1.392E-10	4.026E-11	1.596E-11	8.521E-12	5.274E-12
NE	1.458E-08	2.986E-09	7.795E-10	3.501E-10	1.981E-10	7.616E-11	2.203E-11	8.733E-12	4.663E-12	2.886E-12
ENE	8.998E-09	1.843E-09	4.812E-10	2.161E-10	1.223E-10	4.701E-11	1.360E-11	5.391E-12	2.879E-12	1.782E-12
E	6.119E-09	1.253E-09	3.272E-10	1.470E-10	8.313E-11	3.197E-11	9.249E-12	3.666E-12	1.957E-12	1.212E-12
ESE	1.116E-08	2.286E-09	5.967E-10	2.680E-10	1.516E-10	5.830E-11	1.687E-11	6.684E-12	3.569E-12	2.209E-12
SE	2.034E-08	4.166E-09	1.087E-09	4.884E-10	2.763E-10	1.063E-10	3.074E-11	1.218E-11	6.506E-12	4.027E-12
SSE	3.851E-08	7.889E-09	2.059E-09	9.249E-10	5.232E-10	2.012E-10	5.821E-11	2.307E-11	1.232E-11	7.626E-12

VENTS GROUND LEVEL RELEASES - APR-JUN 2012
CORRECTED USING STANDARD OPEN TERRAIN FACTORS
SPECIFIC POINTS OF INTEREST

RELEASE ID	TYPE OF LOCATION	DIRECTION FROM SITE	DIST. (MI)	X/Q (SEC/M3) NO DECAY UNDEPLETED	X/Q (SEC/M3) 2.26 DAY DECAY UNDEPLETED	X/Q (SEC/M3) 8.0 DAY DECAY DEPLETED	D/Q (PER SQ.METER)
A	Site Boundary	S	.80	6.3E-06	6.3E-06	5.6E-06	3.4E-08
A	Site Boundary	SSW	.82	2.1E-06	2.1E-06	1.8E-06	1.3E-08
A	Site Boundary	SW	.97	1.0E-06	1.0E-06	8.8E-07	6.8E-09
A	Site Boundary	WSW	.93	1.4E-06	1.4E-06	1.2E-06	1.1E-08
A	Site Boundary	W	.91	8.5E-07	8.5E-07	7.5E-07	5.9E-09
A	Site Boundary	WNW	.94	1.2E-06	1.2E-06	1.0E-06	7.4E-09
A	Site Boundary	NW	.81	3.6E-06	3.6E-06	3.2E-06	3.2E-08
A	Site Boundary	NNW	.69	7.8E-06	7.8E-06	7.0E-06	5.4E-08
A	Site Boundary	N	.67	1.3E-05	1.3E-05	1.2E-05	9.0E-08
A	Site Boundary	NNE	.60	9.1E-06	9.1E-06	8.2E-06	3.9E-08
A	Site Boundary	NE	.62	4.2E-06	4.2E-06	3.8E-06	2.0E-08
A	Site Boundary	ENE	.59	3.5E-06	3.4E-06	3.1E-06	1.4E-08
A	Site Boundary	E	.53	3.1E-06	3.0E-06	2.8E-06	1.1E-08
A	Site Boundary	ESE	.54	4.5E-06	4.5E-06	4.1E-06	2.0E-08
A	Site Boundary	SE	.65	5.6E-06	5.5E-06	5.0E-06	2.6E-08
A	Site Boundary	SSE	.81	6.4E-06	6.4E-06	5.7E-06	3.2E-08
A	Nearest Res	SSW	3.00	1.2E-07	1.2E-07	9.5E-08	5.5E-10
A	Nearest Res	SW	1.30	5.1E-07	5.1E-07	4.4E-07	3.3E-09
A	Nearest Res	WSW	1.90	2.6E-07	2.5E-07	2.1E-07	1.8E-09
A	Nearest Res	W	2.90	6.5E-08	6.4E-08	5.2E-08	3.4E-10
A	Nearest Res	WNW	1.70	3.0E-07	3.0E-07	2.5E-07	1.7E-09
A	Nearest Res	NW	.90	2.8E-06	2.8E-06	2.5E-06	2.5E-08
A	Nearest Res	NNW	1.90	8.5E-07	8.4E-07	7.0E-07	4.5E-09
A	Nearest Res	N	3.00	5.8E-07	5.8E-07	4.6E-07	2.5E-09
A	Nearest Res	NNE	1.90	8.3E-07	8.2E-07	6.9E-07	2.6E-09
A	Nearest Res	NE	3.00	1.6E-07	1.6E-07	1.3E-07	4.9E-10
A	Nearest Res	ENE	1.70	3.7E-07	3.6E-07	3.1E-07	1.2E-09
A	Nearest Res	E	2.20	1.6E-07	1.6E-07	1.3E-07	4.2E-10
A	Nearest Res	ESE	2.30	2.2E-07	2.2E-07	1.8E-07	6.9E-10
A	Nearest Res	SE	3.00	2.3E-07	2.2E-07	1.8E-07	6.8E-10
A	Nearest Cow	NNW	3.50	2.6E-07	2.5E-07	2.0E-07	1.1E-09
A	Nearest Garde	SSW	3.00	1.2E-07	1.2E-07	9.5E-08	5.5E-10
A	Nearest Garde	SW	1.30	5.1E-07	5.1E-07	4.4E-07	3.3E-09
A	Nearest Garde	WSW	1.90	2.6E-07	2.5E-07	2.1E-07	1.8E-09
A	Nearest Garde	W	2.90	6.5E-08	6.4E-08	5.2E-08	3.4E-10
A	Nearest Garde	WNW	2.40	1.4E-07	1.4E-07	1.2E-07	7.3E-10
A	Nearest Garde	NW	2.90	2.1E-07	2.0E-07	1.6E-07	1.4E-09
A	Nearest Garde	NNW	2.80	3.9E-07	3.9E-07	3.1E-07	1.8E-09
A	Nearest Garde	ENE	1.70	3.7E-07	3.6E-07	3.1E-07	1.2E-09
A	Nearest Garde	E	2.20	1.6E-07	1.6E-07	1.3E-07	4.2E-10
A	Nearest Garde	ESE	2.30	2.2E-07	2.2E-07	1.8E-07	6.9E-10

Atmospheric Diffusion Estimates

Ground Level Releases

January-June 2012

VENTS GROUND LEVEL RELEASES - JAN-JUN 2012
NO DECAY, UNDEPLETED
CORRECTED USING STANDARD OPEN TERRAIN FACTORS

ANNUAL AVERAGE CHI/Q (SEC/METER CUBED) DISTANCE IN MILES FROM THE SITE

SECTOR	.250	.500	.750	1.000	1.500	2.000	2.500	3.000	3.500	4.000	4.500
S	3.994E-05	1.285E-05	6.731E-06	3.349E-06	1.362E-06	7.438E-07	4.747E-07	3.333E-07	2.495E-07	1.954E-07	1.584E-07
SSW	1.776E-05	5.762E-06	3.034E-06	1.510E-06	6.060E-07	3.280E-07	2.079E-07	1.451E-07	1.081E-07	8.435E-08	6.814E-08
SW	9.659E-06	3.215E-06	1.676E-06	8.247E-07	3.257E-07	1.744E-07	1.097E-07	7.609E-08	5.639E-08	4.381E-08	3.525E-08
WSW	1.069E-05	3.656E-06	1.942E-06	9.621E-07	3.755E-07	1.993E-07	1.244E-07	8.575E-08	6.321E-08	4.886E-08	3.915E-08
W	1.029E-05	3.502E-06	1.850E-06	9.153E-07	3.599E-07	1.921E-07	1.204E-07	8.328E-08	6.157E-08	4.772E-08	3.832E-08
WNW	1.581E-05	5.204E-06	2.714E-06	1.341E-06	5.369E-07	2.901E-07	1.837E-07	1.281E-07	9.534E-08	7.434E-08	6.001E-08
NW	2.804E-05	9.295E-06	4.890E-06	2.423E-06	9.619E-07	5.169E-07	3.258E-07	2.264E-07	1.681E-07	1.307E-07	1.053E-07
NNW	5.639E-05	1.754E-05	9.079E-06	4.522E-06	1.879E-06	1.041E-06	6.715E-07	4.754E-07	3.582E-07	2.822E-07	2.299E-07
N	8.296E-05	2.583E-05	1.355E-05	6.795E-06	2.813E-06	1.555E-06	1.001E-06	7.076E-07	5.325E-07	4.191E-07	3.411E-07
NNE	4.420E-05	1.375E-05	7.308E-06	3.691E-06	1.524E-06	8.407E-07	5.404E-07	3.815E-07	2.868E-07	2.255E-07	1.833E-07
NE	2.126E-05	6.821E-06	3.656E-06	1.845E-06	7.512E-07	4.105E-07	2.621E-07	1.840E-07	1.377E-07	1.078E-07	8.738E-08
ENE	1.647E-05	5.226E-06	2.764E-06	1.387E-06	5.668E-07	3.105E-07	1.986E-07	1.397E-07	1.047E-07	8.207E-08	6.659E-08
E	1.426E-05	4.661E-06	2.490E-06	1.249E-06	5.045E-07	2.742E-07	1.744E-07	1.220E-07	9.107E-08	7.117E-08	5.757E-08
ESE	1.917E-05	6.257E-06	3.287E-06	1.633E-06	6.578E-07	3.572E-07	2.270E-07	1.588E-07	1.185E-07	9.261E-08	7.490E-08
SE	2.828E-05	9.268E-06	4.984E-06	2.510E-06	1.013E-06	5.498E-07	3.492E-07	2.442E-07	1.821E-07	1.422E-07	1.150E-07
SSE	3.821E-05	1.221E-05	6.420E-06	3.208E-06	1.310E-06	7.177E-07	4.590E-07	3.227E-07	2.418E-07	1.896E-07	1.538E-07

ANNUAL AVERAGE CHI/Q (SEC/METER CUBED) DISTANCE IN MILES FROM THE SITE

SECTOR	5.000	7.500	10.000	15.000	20.000	25.000	30.000	35.000	40.000	45.000	50.000
S	1.319E-07	6.934E-08	4.568E-08	2.684E-08	1.850E-08	1.389E-08	1.101E-08	9.051E-09	7.644E-09	6.589E-09	5.771E-09
SSW	5.656E-08	2.942E-08	1.924E-08	1.119E-08	7.667E-09	5.730E-09	4.522E-09	3.706E-09	3.121E-09	2.684E-09	2.346E-09
SW	2.917E-08	1.500E-08	9.739E-09	5.612E-09	3.823E-09	2.846E-09	2.240E-09	1.831E-09	1.539E-09	1.321E-09	1.153E-09
WSW	3.226E-08	1.633E-08	1.048E-08	5.932E-09	3.988E-09	2.938E-09	2.292E-09	1.860E-09	1.554E-09	1.326E-09	1.152E-09
W	3.164E-08	1.613E-08	1.040E-08	5.930E-09	4.004E-09	2.960E-09	2.316E-09	1.884E-09	1.577E-09	1.349E-09	1.173E-09
WNW	4.978E-08	2.582E-08	1.685E-08	9.783E-09	6.692E-09	4.997E-09	3.942E-09	3.229E-09	2.719E-09	2.337E-09	2.042E-09
NW	8.716E-08	4.489E-08	2.915E-08	1.681E-08	1.144E-08	8.514E-09	6.697E-09	5.472E-09	4.597E-09	3.945E-09	3.442E-09
NNW	1.922E-07	1.025E-07	6.823E-08	4.061E-08	2.821E-08	2.131E-08	1.696E-08	1.400E-08	1.186E-08	1.026E-08	9.005E-09
N	2.849E-07	1.516E-07	1.006E-07	5.969E-08	4.137E-08	3.119E-08	2.479E-08	2.043E-08	1.729E-08	1.493E-08	1.310E-08
NNE	1.530E-07	8.117E-08	5.378E-08	3.182E-08	2.201E-08	1.657E-08	1.316E-08	1.083E-08	9.161E-09	7.904E-09	6.929E-09
NE	7.271E-08	3.815E-08	2.509E-08	1.469E-08	1.009E-08	7.560E-09	5.977E-09	4.904E-09	4.134E-09	3.558E-09	3.112E-09
ENE	5.547E-08	2.923E-08	1.928E-08	1.134E-08	7.820E-09	5.872E-09	4.653E-09	3.825E-09	3.230E-09	2.784E-09	2.438E-09
E	4.783E-08	2.494E-08	1.634E-08	9.516E-09	6.519E-09	4.871E-09	3.844E-09	3.150E-09	2.652E-09	2.280E-09	1.992E-09
ESE	6.225E-08	3.252E-08	2.133E-08	1.246E-08	8.554E-09	6.405E-09	5.064E-09	4.155E-09	3.503E-09	3.015E-09	2.638E-09
SE	9.548E-08	4.968E-08	3.248E-08	1.887E-08	1.290E-08	9.622E-09	7.583E-09	6.205E-09	5.219E-09	4.482E-09	3.913E-09
SSE	1.281E-07	6.746E-08	4.448E-08	2.615E-08	1.803E-08	1.354E-08	1.072E-08	8.815E-09	7.444E-09	6.416E-09	5.619E-09

CHI/Q (SEC/METER CUBED) FOR EACH SEGMENT
SEGMENT BOUNDARIES IN MILES FROM THE SITE

DIRECTION FROM SITE	.5-1	1-2	2-3	3-4	4-5	5-10	10-20	20-30	30-40	40-50
S	6.587E-06	1.529E-06	4.899E-07	2.528E-07	1.596E-07	7.272E-08	2.732E-08	1.397E-08	9.074E-09	6.598E-09
SSW	2.963E-06	6.834E-07	2.148E-07	1.096E-07	6.865E-08	3.093E-08	1.141E-08	5.763E-09	3.717E-09	2.688E-09
SW	1.640E-06	3.694E-07	1.135E-07	5.722E-08	3.553E-08	1.581E-08	5.734E-09	2.864E-09	1.837E-09	1.323E-09
WSW	1.887E-06	4.275E-07	1.289E-07	6.418E-08	3.948E-08	1.727E-08	6.078E-09	2.960E-09	1.867E-09	1.329E-09
W	1.802E-06	4.087E-07	1.247E-07	6.250E-08	3.863E-08	1.703E-08	6.067E-09	2.981E-09	1.891E-09	1.351E-09
WNW	2.657E-06	6.060E-07	1.898E-07	9.670E-08	6.047E-08	2.716E-08	9.981E-09	5.027E-09	3.238E-09	2.341E-09
NW	4.772E-06	1.089E-06	3.370E-07	1.705E-07	1.061E-07	4.729E-08	1.717E-08	8.568E-09	5.489E-09	3.952E-09
NNW	8.934E-06	2.094E-06	6.916E-07	3.627E-07	2.314E-07	1.072E-07	4.124E-08	2.141E-08	1.403E-08	1.027E-08
N	1.327E-05	3.139E-06	1.031E-06	5.394E-07	3.434E-07	1.585E-07	6.064E-08	3.134E-08	2.048E-08	1.495E-08
NNE	7.132E-06	1.702E-06	5.569E-07	2.905E-07	1.846E-07	8.496E-08	3.234E-08	1.666E-08	1.086E-08	7.915E-09
NE	3.554E-06	8.428E-07	2.704E-07	1.395E-07	8.800E-08	4.002E-08	1.496E-08	7.602E-09	4.917E-09	3.563E-09
ENE	2.699E-06	6.352E-07	2.049E-07	1.061E-07	6.706E-08	3.064E-08	1.154E-08	5.904E-09	3.835E-09	2.788E-09
E	2.421E-06	5.677E-07	1.801E-07	9.233E-08	5.799E-08	2.620E-08	9.700E-09	4.900E-09	3.159E-09	2.283E-09
ESE	3.212E-06	7.408E-07	2.344E-07	1.201E-07	7.546E-08	3.415E-08	1.269E-08	6.442E-09	4.166E-09	3.020E-09
SE	4.837E-06	1.140E-06	3.607E-07	1.847E-07	1.158E-07	5.221E-08	1.924E-08	9.680E-09	6.223E-09	4.490E-09
SSE	6.280E-06	1.469E-06	4.735E-07	2.450E-07	1.549E-07	7.072E-08	2.661E-08	1.361E-08	8.838E-09	6.425E-09

VENTS GROUND LEVEL RELEASES - JAN-JUN 2012
2.260 DAY DECAY, UNDEPLETED
CORRECTED USING STANDARD OPEN TERRAIN FACTORS

ANNUAL AVERAGE CHI/Q (SEC/METER CUBED) DISTANCE IN MILES FROM THE SITE

SECTOR	.250	.500	.750	1.000	1.500	2.000	2.500	3.000	3.500	4.000	4.500
S	3.990E-05	1.282E-05	6.712E-06	3.337E-06	1.354E-06	7.380E-07	4.700E-07	3.293E-07	2.459E-07	1.923E-07	1.555E-07
SSW	1.774E-05	5.751E-06	3.025E-06	1.505E-06	6.024E-07	3.253E-07	2.057E-07	1.433E-07	1.065E-07	8.293E-08	6.684E-08
SW	9.650E-06	3.209E-06	1.672E-06	8.218E-07	3.239E-07	1.731E-07	1.086E-07	7.522E-08	5.564E-08	4.313E-08	3.464E-08
WSW	1.068E-05	3.650E-06	1.937E-06	9.588E-07	3.735E-07	1.979E-07	1.233E-07	8.483E-08	6.240E-08	4.815E-08	3.850E-08
W	1.028E-05	3.496E-06	1.845E-06	9.121E-07	3.580E-07	1.907E-07	1.193E-07	8.236E-08	6.076E-08	4.700E-08	3.767E-08
WNW	1.579E-05	5.194E-06	2.706E-06	1.336E-06	5.337E-07	2.877E-07	1.818E-07	1.265E-07	9.393E-08	7.307E-08	5.886E-08
NW	2.801E-05	9.279E-06	4.878E-06	2.415E-06	9.569E-07	5.132E-07	3.229E-07	2.240E-07	1.659E-07	1.288E-07	1.035E-07
NNW	5.633E-05	1.750E-05	9.050E-06	4.503E-06	1.866E-06	1.032E-06	6.640E-07	4.689E-07	3.525E-07	2.771E-07	2.252E-07
N	8.287E-05	2.577E-05	1.351E-05	6.767E-06	2.796E-06	1.542E-06	9.906E-07	6.987E-07	5.246E-07	4.120E-07	3.345E-07
NNE	4.415E-05	1.372E-05	7.285E-06	3.676E-06	1.514E-06	8.335E-07	5.345E-07	3.765E-07	2.824E-07	2.215E-07	1.797E-07
NE	2.124E-05	6.807E-06	3.644E-06	1.837E-06	7.464E-07	4.071E-07	2.593E-07	1.816E-07	1.356E-07	1.060E-07	8.567E-08
ENE	1.645E-05	5.214E-06	2.755E-06	1.381E-06	5.629E-07	3.077E-07	1.963E-07	1.377E-07	1.030E-07	8.056E-08	6.520E-08
E	1.425E-05	4.652E-06	2.482E-06	1.244E-06	5.016E-07	2.721E-07	1.726E-07	1.206E-07	8.981E-08	7.004E-08	5.654E-08
ESE	1.915E-05	6.245E-06	3.277E-06	1.626E-06	6.539E-07	3.543E-07	2.247E-07	1.568E-07	1.168E-07	9.107E-08	7.350E-08
SE	2.825E-05	9.251E-06	4.971E-06	2.501E-06	1.007E-06	5.457E-07	3.459E-07	2.414E-07	1.797E-07	1.400E-07	1.130E-07
SSE	3.817E-05	1.219E-05	6.401E-06	3.195E-06	1.302E-06	7.118E-07	4.542E-07	3.187E-07	2.382E-07	1.864E-07	1.509E-07

ANNUAL AVERAGE CHI/Q (SEC/METER CUBED) DISTANCE IN MILES FROM THE SITE

SECTOR	5.000	7.500	10.000	15.000	20.000	25.000	30.000	35.000	40.000	45.000	50.000
S	1.292E-07	6.719E-08	4.378E-08	2.516E-08	1.697E-08	1.246E-08	9.662E-09	7.770E-09	6.420E-09	5.414E-09	4.639E-09
SSW	5.535E-08	2.847E-08	1.841E-08	1.047E-08	7.004E-09	5.115E-09	3.945E-09	3.159E-09	2.599E-09	2.184E-09	1.866E-09
SW	2.860E-08	1.456E-08	9.353E-09	5.278E-09	3.520E-09	2.565E-09	1.976E-09	1.582E-09	1.302E-09	1.094E-09	9.348E-10
WSW	3.167E-08	1.588E-08	1.008E-08	5.598E-09	3.689E-09	2.664E-09	2.037E-09	1.620E-09	1.327E-09	1.110E-09	9.447E-10
W	3.104E-08	1.567E-08	9.998E-09	5.585E-09	3.694E-09	2.675E-09	2.050E-09	1.634E-09	1.339E-09	1.122E-09	9.558E-10
WNW	4.871E-08	2.498E-08	1.612E-08	9.137E-09	6.105E-09	4.452E-09	3.430E-09	2.744E-09	2.256E-09	1.894E-09	1.617E-09
NW	8.555E-08	4.362E-08	2.805E-08	1.584E-08	1.057E-08	7.703E-09	5.936E-09	4.751E-09	3.910E-09	3.287E-09	2.810E-09
NNW	1.878E-07	9.900E-08	6.508E-08	3.780E-08	2.563E-08	1.890E-08	1.468E-08	1.183E-08	9.785E-09	8.257E-09	7.079E-09
N	2.788E-07	1.467E-07	9.631E-08	5.587E-08	3.786E-08	2.791E-08	2.170E-08	1.749E-08	1.448E-08	1.223E-08	1.050E-08
NNE	1.497E-07	7.849E-08	5.142E-08	2.973E-08	2.011E-08	1.480E-08	1.148E-08	9.245E-09	7.642E-09	6.447E-09	5.527E-09
NE	7.113E-08	3.690E-08	2.399E-08	1.373E-08	9.218E-09	6.747E-09	5.213E-09	4.180E-09	3.444E-09	2.897E-09	2.477E-09
ENE	5.418E-08	2.821E-08	1.838E-08	1.055E-08	7.103E-09	5.207E-09	4.027E-09	3.232E-09	2.664E-09	2.242E-09	1.917E-09
E	4.688E-08	2.420E-08	1.569E-08	8.954E-09	6.010E-09	4.401E-09	3.403E-09	2.733E-09	2.255E-09	1.901E-09	1.628E-09
ESE	6.095E-08	3.149E-08	2.043E-08	1.167E-08	7.833E-09	5.735E-09	4.433E-09	3.557E-09	2.933E-09	2.469E-09	2.112E-09
SE	9.362E-08	4.821E-08	3.120E-08	1.775E-08	1.188E-08	8.679E-09	6.698E-09	5.367E-09	4.421E-09	3.718E-09	3.179E-09
SSE	1.254E-07	6.527E-08	4.255E-08	2.445E-08	1.647E-08	1.209E-08	9.357E-09	7.517E-09	6.203E-09	5.225E-09	4.473E-09

CHI/Q (SEC/METER CUBED) FOR EACH SEGMENT
SEGMENT BOUNDARIES IN MILES FROM THE SITE

DIRECTION FROM SITE	.5-1	1-2	2-3	3-4	4-5	5-10	10-20	20-30	30-40	40-50
S	6.570E-06	1.521E-06	4.852E-07	2.493E-07	1.567E-07	7.056E-08	2.566E-08	1.254E-08	7.796E-09	5.425E-09
SSW	2.955E-06	6.797E-07	2.127E-07	1.080E-07	6.735E-08	2.997E-08	1.069E-08	5.151E-09	3.170E-09	2.189E-09
SW	1.636E-06	3.675E-07	1.125E-07	5.647E-08	3.492E-08	1.537E-08	5.402E-09	2.584E-09	1.588E-09	1.097E-09
WSW	1.883E-06	4.255E-07	1.278E-07	6.338E-08	3.883E-08	1.681E-08	5.746E-09	2.687E-09	1.628E-09	1.113E-09
W	1.797E-06	4.068E-07	1.235E-07	6.169E-08	3.798E-08	1.656E-08	5.725E-09	2.697E-09	1.640E-09	1.125E-09
WNW	2.650E-06	6.027E-07	1.879E-07	9.529E-08	5.931E-08	2.631E-08	9.340E-09	4.484E-09	2.754E-09	1.899E-09
NW	4.761E-06	1.084E-06	3.341E-07	1.684E-07	1.044E-07	4.602E-08	1.621E-08	7.761E-09	4.769E-09	3.295E-09
NNW	8.907E-06	2.081E-06	6.840E-07	3.570E-07	2.267E-07	1.037E-07	3.846E-08	1.901E-08	1.187E-08	8.273E-09
N	1.324E-05	3.121E-06	1.021E-06	5.315E-07	3.369E-07	1.537E-07	5.685E-08	2.808E-08	1.755E-08	1.225E-08
NNE	7.111E-06	1.692E-06	5.510E-07	2.861E-07	1.810E-07	8.228E-08	3.027E-08	1.489E-08	9.274E-09	6.460E-09
NE	3.544E-06	8.380E-07	2.676E-07	1.374E-07	8.630E-08	3.877E-08	1.400E-08	6.792E-09	4.195E-09	2.903E-09
ENE	2.691E-06	6.313E-07	2.026E-07	1.044E-07	6.567E-08	2.961E-08	1.076E-08	5.241E-09	3.243E-09	2.247E-09
E	2.414E-06	5.647E-07	1.783E-07	9.107E-08	5.696E-08	2.546E-08	9.142E-09	4.431E-09	2.743E-09	1.905E-09
ESE	3.203E-06	7.368E-07	2.321E-07	1.184E-07	7.406E-08	3.312E-08	1.191E-08	5.774E-09	3.570E-09	2.474E-09
SE	4.825E-06	1.134E-06	3.574E-07	1.822E-07	1.138E-07	5.074E-08	1.813E-08	8.741E-09	5.387E-09	3.727E-09
SSE	6.263E-06	1.461E-06	4.687E-07	2.415E-07	1.519E-07	6.853E-08	2.493E-08	1.216E-08	7.542E-09	5.236E-09

VENTS GROUND LEVEL RELEASES - JAN-JUN 2012
8.000 DAY DECAY, DEPLETED
CORRECTED USING STANDARD OPEN TERRAIN FACTORS

ANNUAL AVERAGE CHI/Q (SEC/METER CUBED) DISTANCE IN MILES FROM THE SITE

SECTOR	.250	.500	.750	1.000	1.500	2.000	2.500	3.000	3.500	4.000	4.500
S	3.779E-05	1.172E-05	5.994E-06	2.929E-06	1.155E-06	6.145E-07	3.835E-07	2.638E-07	1.939E-07	1.493E-07	1.192E-07
SSW	1.680E-05	5.259E-06	2.701E-06	1.321E-06	5.138E-07	2.710E-07	1.679E-07	1.149E-07	8.401E-08	6.444E-08	5.124E-08
SW	9.139E-06	2.934E-06	1.493E-06	7.212E-07	2.762E-07	1.441E-07	8.860E-08	6.024E-08	4.383E-08	3.348E-08	2.652E-08
WSW	1.011E-05	3.337E-06	1.729E-06	8.413E-07	3.184E-07	1.647E-07	1.005E-07	6.791E-08	4.914E-08	3.735E-08	2.946E-08
W	9.738E-06	3.196E-06	1.647E-06	8.004E-07	3.052E-07	1.587E-07	9.726E-08	6.594E-08	4.786E-08	3.647E-08	2.883E-08
WNW	1.496E-05	4.750E-06	2.417E-06	1.173E-06	4.552E-07	2.397E-07	1.483E-07	1.014E-07	7.408E-08	5.679E-08	4.512E-08
NW	2.653E-05	8.484E-06	4.355E-06	2.119E-06	8.157E-07	4.271E-07	2.632E-07	1.793E-07	1.307E-07	9.992E-08	7.923E-08
NNW	5.335E-05	1.601E-05	8.083E-06	3.954E-06	1.593E-06	8.599E-07	5.422E-07	3.761E-07	2.782E-07	2.155E-07	1.728E-07
N	7.849E-05	2.357E-05	1.206E-05	5.941E-06	2.385E-06	1.285E-06	8.085E-07	5.601E-07	4.138E-07	3.202E-07	2.565E-07
NNE	4.182E-05	1.255E-05	6.506E-06	3.227E-06	1.292E-06	6.944E-07	4.364E-07	3.019E-07	2.228E-07	1.722E-07	1.378E-07
NE	2.011E-05	6.226E-06	3.255E-06	1.613E-06	6.368E-07	3.391E-07	2.116E-07	1.456E-07	1.070E-07	8.236E-08	6.570E-08
ENE	1.558E-05	4.769E-06	2.461E-06	1.213E-06	4.804E-07	2.565E-07	1.604E-07	1.105E-07	8.129E-08	6.267E-08	5.004E-08
E	1.350E-05	4.254E-06	2.217E-06	1.092E-06	4.278E-07	2.266E-07	1.408E-07	9.659E-08	7.078E-08	5.439E-08	4.330E-08
ESE	1.814E-05	5.711E-06	2.927E-06	1.428E-06	5.577E-07	2.951E-07	1.833E-07	1.257E-07	9.209E-08	7.075E-08	5.633E-08
SE	2.676E-05	8.459E-06	4.438E-06	2.195E-06	8.586E-07	4.543E-07	2.821E-07	1.933E-07	1.416E-07	1.087E-07	8.651E-08
SSE	3.616E-05	1.115E-05	5.716E-06	2.805E-06	1.111E-06	5.929E-07	3.707E-07	2.554E-07	1.879E-07	1.448E-07	1.157E-07

ANNUAL AVERAGE CHI/Q (SEC/METER CUBED) DISTANCE IN MILES FROM THE SITE

SECTOR	5.000	7.500	10.000	15.000	20.000	25.000	30.000	35.000	40.000	45.000	50.000
S	9.774E-08	4.844E-08	3.032E-08	1.638E-08	1.054E-08	7.453E-09	5.593E-09	4.374E-09	3.525E-09	2.907E-09	2.441E-09
SSW	4.190E-08	2.055E-08	1.277E-08	6.829E-09	4.364E-09	3.069E-09	2.294E-09	1.787E-09	1.436E-09	1.181E-09	9.897E-10
SW	2.162E-08	1.049E-08	6.468E-09	3.429E-09	2.181E-09	1.529E-09	1.140E-09	8.864E-10	7.112E-10	5.842E-10	4.890E-10
WSW	2.392E-08	1.142E-08	6.962E-09	3.628E-09	2.278E-09	1.581E-09	1.169E-09	9.028E-10	7.200E-10	5.883E-10	4.901E-10
W	2.346E-08	1.128E-08	6.909E-09	3.625E-09	2.285E-09	1.591E-09	1.180E-09	9.132E-10	7.296E-10	5.973E-10	4.983E-10
WNW	3.688E-08	1.803E-08	1.118E-08	5.966E-09	3.807E-09	2.675E-09	1.998E-09	1.556E-09	1.250E-09	1.027E-09	8.604E-10
NW	6.463E-08	3.139E-08	1.937E-08	1.028E-08	6.533E-09	4.578E-09	3.412E-09	2.653E-09	2.128E-09	1.748E-09	1.462E-09
NNW	1.423E-07	7.157E-08	4.523E-08	2.474E-08	1.603E-08	1.139E-08	8.585E-09	6.736E-09	5.443E-09	4.499E-09	3.786E-09
N	2.111E-07	1.059E-07	6.676E-08	3.642E-08	2.356E-08	1.672E-08	1.259E-08	9.866E-09	7.968E-09	6.583E-09	5.537E-09
NNE	1.133E-07	5.668E-08	3.568E-08	1.941E-08	1.253E-08	8.879E-09	6.675E-09	5.227E-09	4.217E-09	3.481E-09	2.925E-09
NE	5.387E-08	2.664E-08	1.664E-08	8.960E-09	5.744E-09	4.049E-09	3.031E-09	2.365E-09	1.902E-09	1.566E-09	1.313E-09
ENE	4.107E-08	2.040E-08	1.278E-08	6.909E-09	4.443E-09	3.140E-09	2.355E-09	1.840E-09	1.482E-09	1.222E-09	1.025E-09
E	3.545E-08	1.743E-08	1.085E-08	5.816E-09	3.720E-09	2.618E-09	1.958E-09	1.527E-09	1.227E-09	1.010E-09	8.469E-10
ESE	4.612E-08	2.271E-08	1.415E-08	7.603E-09	4.872E-09	3.434E-09	2.571E-09	2.006E-09	1.614E-09	1.329E-09	1.115E-09
SE	7.077E-08	3.472E-08	2.157E-08	1.153E-08	7.359E-09	5.170E-09	3.860E-09	3.005E-09	2.413E-09	1.983E-09	1.661E-09
SSE	9.491E-08	4.711E-08	2.951E-08	1.595E-08	1.026E-08	7.251E-09	5.439E-09	4.252E-09	3.425E-09	2.824E-09	2.371E-09

CHI/Q (SEC/METER CUBED) FOR EACH SEGMENT
SEGMENT BOUNDARIES IN MILES FROM THE SITE

DIRECTION FROM SITE	.5-1	1-2	2-3	3-4	4-5	5-10	10-20	20-30	30-40	40-50
S	5.905E-06	1.309E-06	3.972E-07	1.969E-07	1.202E-07	5.134E-08	1.688E-08	7.532E-09	4.399E-09	2.918E-09
SSW	2.656E-06	5.852E-07	1.742E-07	8.537E-08	5.169E-08	2.183E-08	7.052E-09	3.104E-09	1.798E-09	1.186E-09
SW	1.470E-06	3.164E-07	9.206E-08	4.458E-08	2.677E-08	1.118E-08	3.550E-09	1.547E-09	8.920E-10	5.866E-10
WSW	1.692E-06	3.663E-07	1.046E-07	5.001E-08	2.975E-08	1.222E-08	3.769E-09	1.602E-09	9.092E-10	5.910E-10
W	1.615E-06	3.501E-07	1.011E-07	4.869E-08	2.911E-08	1.204E-08	3.759E-09	1.612E-09	9.194E-10	5.998E-10
WNW	2.382E-06	5.189E-07	1.539E-07	7.529E-08	4.553E-08	1.917E-08	6.165E-09	2.706E-09	1.565E-09	1.031E-09
NW	4.278E-06	9.326E-07	2.734E-07	1.328E-07	7.995E-08	3.344E-08	1.063E-08	4.633E-09	2.670E-09	1.755E-09
NNW	8.008E-06	1.792E-06	5.605E-07	2.823E-07	1.742E-07	7.559E-08	2.542E-08	1.151E-08	6.772E-09	4.515E-09
N	1.190E-05	2.686E-06	8.361E-07	4.199E-07	2.585E-07	1.119E-07	3.745E-08	1.689E-08	9.920E-09	6.606E-09
NNE	6.392E-06	1.457E-06	4.514E-07	2.261E-07	1.390E-07	5.994E-08	1.997E-08	8.971E-09	5.256E-09	3.493E-09
NE	3.185E-06	7.214E-07	2.192E-07	1.086E-07	6.625E-08	2.825E-08	9.238E-09	4.094E-09	2.379E-09	1.572E-09
ENE	2.419E-06	5.436E-07	1.660E-07	8.254E-08	5.046E-08	2.161E-08	7.118E-09	3.173E-09	1.851E-09	1.226E-09
E	2.170E-06	4.860E-07	1.460E-07	7.191E-08	4.368E-08	1.851E-08	6.003E-09	2.648E-09	1.536E-09	1.014E-09
ESE	2.879E-06	6.343E-07	1.901E-07	9.356E-08	5.682E-08	2.411E-08	7.845E-09	3.472E-09	2.018E-09	1.334E-09
SE	4.335E-06	9.760E-07	2.925E-07	1.438E-07	8.726E-08	3.689E-08	1.191E-08	5.230E-09	3.024E-09	1.991E-09
SSE	5.629E-06	1.257E-06	3.838E-07	1.908E-07	1.166E-07	4.991E-08	1.644E-08	7.329E-09	4.276E-09	2.834E-09

VENTS GROUND LEVEL RELEASES - JAN-JUN 2012
CORRECTED USING STANDARD OPEN TERRAIN FACTORS

********** RELATIVE DEPOSITION PER UNIT AREA (M**-2) AT FIXED POINTS BY DOWNWIND SECTORS **********

DIRECTION FROM SITE	DISTANCES IN MILES .25	.50	.75	1.00	1.50	2.00	2.50	3.00	3.50	4.00	4.50
S	2.068E-07	6.995E-08	3.591E-08	1.707E-08	6.133E-09	3.041E-09	1.791E-09	1.173E-09	8.251E-10	6.115E-10	4.712E-10
SSW	8.644E-08	2.923E-08	1.501E-08	7.135E-09	2.563E-09	1.271E-09	7.484E-10	4.901E-10	3.448E-10	2.556E-10	1.969E-10
SW	5.515E-08	1.865E-08	9.576E-09	4.553E-09	1.635E-09	8.110E-10	4.775E-10	3.127E-10	2.200E-10	1.631E-10	1.257E-10
WSW	6.840E-08	2.313E-08	1.188E-08	5.646E-09	2.028E-09	1.006E-09	5.922E-10	3.878E-10	2.729E-10	2.022E-10	1.558E-10
W	6.523E-08	2.206E-08	1.132E-08	5.384E-09	1.934E-09	9.591E-10	5.647E-10	3.698E-10	2.602E-10	1.928E-10	1.486E-10
WNW	7.955E-08	2.690E-08	1.381E-08	6.567E-09	2.359E-09	1.170E-09	6.888E-10	4.510E-10	3.173E-10	2.352E-10	1.812E-10
NW	1.967E-07	6.653E-08	3.416E-08	1.624E-08	5.833E-09	2.893E-09	1.703E-09	1.115E-09	7.848E-10	5.816E-10	4.482E-10
NNW	2.451E-07	8.287E-08	4.255E-08	2.023E-08	7.266E-09	3.603E-09	2.122E-09	1.389E-09	9.776E-10	7.245E-10	5.583E-10
N	3.919E-07	1.325E-07	6.805E-08	3.235E-08	1.162E-08	5.763E-09	3.394E-09	2.222E-09	1.564E-09	1.159E-09	8.929E-10
NNE	1.798E-07	6.080E-08	3.122E-08	1.484E-08	5.331E-09	2.644E-09	1.557E-09	1.019E-09	7.172E-10	5.315E-10	4.096E-10
NE	1.034E-07	3.497E-08	1.796E-08	8.536E-09	3.066E-09	1.521E-09	8.954E-10	5.863E-10	4.125E-10	3.057E-10	2.356E-10
ENE	7.054E-08	2.385E-08	1.225E-08	5.823E-09	2.091E-09	1.037E-09	6.107E-10	3.999E-10	2.814E-10	2.085E-10	1.607E-10
E	7.424E-08	2.511E-08	1.289E-08	6.128E-09	2.201E-09	1.092E-09	6.428E-10	4.209E-10	2.962E-10	2.195E-10	1.691E-10
ESE	1.098E-07	3.712E-08	1.906E-08	9.062E-09	3.255E-09	1.614E-09	9.505E-10	6.224E-10	4.379E-10	3.245E-10	2.501E-10
SE	1.771E-07	5.989E-08	3.075E-08	1.462E-08	5.251E-09	2.604E-09	1.533E-09	1.004E-09	7.065E-10	5.236E-10	4.035E-10
SSE	2.058E-07	6.959E-08	3.573E-08	1.699E-08	6.101E-09	3.026E-09	1.782E-09	1.167E-09	8.209E-10	6.083E-10	4.688E-10

DIRECTION FROM SITE	DISTANCES IN MILES 5.00	7.50	10.00	15.00	20.00	25.00	30.00	35.00	40.00	45.00	50.00
S	3.744E-10	1.663E-10	1.007E-10	5.092E-11	3.082E-11	2.066E-11	1.481E-11	1.112E-11	8.644E-12	6.905E-12	5.636E-12
SSW	1.565E-10	6.950E-11	4.210E-11	2.128E-11	1.288E-11	8.636E-12	6.188E-12	4.646E-12	3.613E-12	2.886E-12	2.356E-12
SW	9.982E-11	4.434E-11	2.686E-11	1.358E-11	8.218E-12	5.510E-12	3.948E-12	2.965E-12	2.305E-12	1.841E-12	1.503E-12
WSW	1.238E-10	5.500E-11	3.332E-11	1.684E-11	1.019E-11	6.833E-12	4.897E-12	3.677E-12	2.859E-12	2.284E-12	1.864E-12
W	1.181E-10	5.244E-11	3.177E-11	1.606E-11	9.718E-12	6.516E-12	4.669E-12	3.506E-12	2.726E-12	2.177E-12	1.777E-12
WNW	1.440E-10	6.396E-11	3.875E-11	1.958E-11	1.185E-11	7.947E-12	5.695E-12	4.276E-12	3.325E-12	2.656E-12	2.168E-12
NW	3.561E-10	1.582E-10	9.582E-11	4.843E-11	2.931E-11	1.965E-11	1.408E-11	1.057E-11	8.222E-12	6.568E-12	5.361E-12
NNW	4.435E-10	1.970E-10	1.194E-10	6.033E-11	3.651E-11	2.448E-11	1.754E-11	1.317E-11	1.024E-11	8.181E-12	6.678E-12
N	7.094E-10	3.151E-10	1.909E-10	9.649E-11	5.840E-11	3.916E-11	2.806E-11	2.107E-11	1.638E-11	1.308E-11	1.068E-11
NNE	3.254E-10	1.446E-10	8.757E-11	4.426E-11	2.679E-11	1.796E-11	1.287E-11	9.664E-12	7.514E-12	6.002E-12	4.899E-12
NE	1.872E-10	8.315E-11	5.037E-11	2.546E-11	1.541E-11	1.033E-11	7.403E-12	5.559E-12	4.322E-12	3.452E-12	2.818E-12
ENE	1.277E-10	5.672E-11	3.436E-11	1.736E-11	1.051E-11	7.047E-12	5.049E-12	3.792E-12	2.948E-12	2.355E-12	1.922E-12
E	1.344E-10	5.969E-11	3.616E-11	1.828E-11	1.106E-11	7.417E-12	5.314E-12	3.991E-12	3.103E-12	2.478E-12	2.023E-12
ESE	1.987E-10	8.826E-11	5.347E-11	2.702E-11	1.636E-11	1.097E-11	7.858E-12	5.901E-12	4.588E-12	3.665E-12	2.991E-12
SE	3.206E-10	1.424E-10	8.626E-11	4.360E-11	2.639E-11	1.769E-11	1.268E-11	9.520E-12	7.402E-12	5.913E-12	4.826E-12
SSE	3.724E-10	1.655E-10	1.002E-10	5.066E-11	3.066E-11	2.056E-11	1.473E-11	1.106E-11	8.600E-12	6.870E-12	5.607E-12

********** RELATIVE DEPOSITION PER UNIT AREA (M**-2) BY DOWNWIND SECTORS **********

DIRECTION FROM SITE	SEGMENT BOUNDARIES IN MILES .5-1	1-2	2-3	3-4	4-5	5-10	10-20	20-30	30-40	40-50
S	3.510E-08	7.190E-09	1.877E-09	8.430E-10	4.769E-10	1.834E-10	5.306E-11	2.103E-11	1.123E-11	6.951E-12
SSW	1.467E-08	3.005E-09	7.845E-10	3.523E-10	1.993E-10	7.665E-11	2.217E-11	8.788E-12	4.693E-12	2.905E-12
SW	9.360E-09	1.917E-09	5.005E-10	2.248E-10	1.272E-10	4.890E-11	1.415E-11	5.607E-12	2.994E-12	1.853E-12
WSW	1.161E-08	2.378E-09	6.208E-10	2.788E-10	1.577E-10	6.065E-11	1.755E-11	6.954E-12	3.714E-12	2.299E-12
W	1.107E-08	2.267E-09	5.919E-10	2.658E-10	1.504E-10	5.783E-11	1.673E-11	6.631E-12	3.541E-12	2.192E-12
WNW	1.350E-08	2.765E-09	7.219E-10	3.242E-10	1.834E-10	7.054E-11	2.041E-11	8.088E-12	4.319E-12	2.673E-12
NW	3.339E-08	6.839E-09	1.785E-09	8.018E-10	4.536E-10	1.744E-10	5.047E-11	2.000E-11	1.068E-11	6.611E-12
NNW	4.159E-08	8.519E-09	2.224E-09	9.988E-10	5.650E-10	2.173E-10	6.286E-11	2.491E-11	1.330E-11	8.235E-12
N	6.652E-08	1.362E-08	3.557E-09	1.597E-09	9.037E-10	3.475E-10	1.005E-10	3.985E-11	2.128E-11	1.317E-11
NNE	3.051E-08	6.250E-09	1.632E-09	7.328E-10	4.146E-10	1.594E-10	4.612E-11	1.828E-11	9.761E-12	6.042E-12
NE	1.755E-08	3.595E-09	9.385E-10	4.215E-10	2.384E-10	9.169E-11	2.653E-11	1.051E-11	5.614E-12	3.475E-12
ENE	1.197E-08	2.452E-09	6.401E-10	2.875E-10	1.626E-10	6.254E-11	1.809E-11	7.171E-12	3.830E-12	2.370E-12
E	1.260E-08	2.581E-09	6.737E-10	3.026E-10	1.712E-10	6.583E-11	1.904E-11	7.548E-12	4.031E-12	2.495E-12
ESE	1.863E-08	3.816E-09	9.962E-10	4.474E-10	2.531E-10	9.734E-11	2.816E-11	1.116E-11	5.960E-12	3.689E-12
SE	3.006E-08	6.157E-09	1.607E-09	7.219E-10	4.084E-10	1.570E-10	4.543E-11	1.801E-11	9.616E-12	5.952E-12
SSE	3.492E-08	7.153E-09	1.867E-09	8.387E-10	4.745E-10	1.825E-10	5.278E-11	2.092E-11	1.117E-11	6.915E-12

VENTS GROUND LEVEL RELEASES - JAN-JUN 2012
CORRECTED USING STANDARD OPEN TERRAIN FACTORS
SPECIFIC POINTS OF INTEREST

RELEASE ID	TYPE OF LOCATION	DIRECTION FROM SITE	DIST. (MI)	X/Q (SEC/M3) NO DECAY UNDEPLETED	X/Q (SEC/M3) 2.26 DAY DECAY UNDEPLETED	X/Q (SEC/M3) 8.0 DAY DECAY DEPLETED	D/Q (PER SQ.METER)
A	Site Boundary	S	.80	5.8E-06	5.8E-06	5.1E-06	3.1E-08
A	Site Boundary	SSW	.82	2.4E-06	2.4E-06	2.1E-06	1.2E-08
A	Site Boundary	SW	.97	8.8E-07	8.7E-07	7.7E-07	4.9E-09
A	Site Boundary	WSW	.93	1.2E-06	1.2E-06	1.0E-06	6.9E-09
A	Site Boundary	W	.91	1.1E-06	1.1E-06	1.0E-06	6.8E-09
A	Site Boundary	WNW	.94	1.6E-06	1.6E-06	1.4E-06	7.8E-09
A	Site Boundary	NW	.81	4.0E-06	4.0E-06	3.6E-06	2.8E-08
A	Site Boundary	NNW	.69	1.0E-05	1.0E-05	9.3E-06	4.9E-08
A	Site Boundary	N	.67	1.6E-05	1.6E-05	1.4E-05	8.1E-08
A	Site Boundary	NNE	.60	1.0E-05	1.0E-05	9.3E-06	4.5E-08
A	Site Boundary	NE	.62	4.8E-06	4.8E-06	4.3E-06	2.4E-08
A	Site Boundary	ENE	.59	4.0E-06	4.0E-06	3.6E-06	1.8E-08
A	Site Boundary	E	.53	4.3E-06	4.3E-06	3.9E-06	2.3E-08
A	Site Boundary	ESE	.54	5.6E-06	5.6E-06	5.1E-06	3.3E-08
A	Site Boundary	SE	.65	6.2E-06	6.2E-06	5.6E-06	3.9E-08
A	Site Boundary	SSE	.81	5.3E-06	5.3E-06	4.7E-06	2.9E-08
A	Nearest Res	SSW	3.00	1.5E-07	1.4E-07	1.1E-07	4.9E-10
A	Nearest Res	SW	1.30	4.5E-07	4.5E-07	3.9E-07	2.3E-09
A	Nearest Res	WSW	1.90	2.2E-07	2.2E-07	1.8E-07	1.1E-09
A	Nearest Res	W	2.90	8.9E-08	8.8E-08	7.1E-08	4.0E-10
A	Nearest Res	WNW	1.70	4.1E-07	4.1E-07	3.4E-07	1.7E-09
A	Nearest Res	NW	.90	3.1E-06	3.1E-06	2.8E-06	2.1E-08
A	Nearest Res	NNW	1.90	1.2E-06	1.1E-06	9.6E-07	4.1E-09
A	Nearest Res	N	3.00	7.1E-07	7.0E-07	5.6E-07	2.2E-09
A	Nearest Res	NNE	1.90	9.3E-07	9.3E-07	7.7E-07	3.0E-09
A	Nearest Res	NE	3.00	1.8E-07	1.8E-07	1.5E-07	5.9E-10
A	Nearest Res	ENE	1.70	4.3E-07	4.3E-07	3.6E-07	1.5E-09
A	Nearest Res	E	2.20	2.3E-07	2.2E-07	1.8E-07	8.7E-10
A	Nearest Res	ESE	2.30	2.7E-07	2.7E-07	2.2E-07	1.2E-09
A	Nearest Res	SE	3.00	2.4E-07	2.4E-07	1.9E-07	1.0E-09
A	Nearest Cow	NNW	3.50	3.6E-07	3.5E-07	2.8E-07	9.8E-10
A	Nearest Garde	SSW	3.00	1.5E-07	1.4E-07	1.1E-07	4.9E-10
A	Nearest Garde	SW	1.30	4.5E-07	4.5E-07	3.9E-07	2.3E-09
A	Nearest Garde	WSW	1.90	2.2E-07	2.2E-07	1.8E-07	1.1E-09
A	Nearest Garde	W	2.90	8.9E-08	8.8E-08	7.1E-08	4.0E-10
A	Nearest Garde	WNW	2.40	2.0E-07	2.0E-07	1.6E-07	7.6E-10
A	Nearest Garde	NW	2.90	2.4E-07	2.4E-07	1.9E-07	1.2E-09
A	Nearest Garde	NNW	2.80	5.4E-07	5.3E-07	4.3E-07	1.6E-09
A	Nearest Garde	ENE	1.70	4.3E-07	4.3E-07	3.6E-07	1.5E-09
A	Nearest Garde	E	2.20	2.3E-07	2.2E-07	1.8E-07	8.7E-10
A	Nearest Garde	ESE	2.30	2.7E-07	2.7E-07	2.2E-07	1.2E-09

Atmospheric Diffusion Estimates

Ground Level Releases

July-September 2012

VENTS GROUND LEVEL RELEASES - JUL-SEP 2012
NO DECAY, UNDEPLETED
CORRECTED USING STANDARD OPEN TERRAIN FACTORS

ANNUAL AVERAGE CHI/Q (SEC/METER CUBED) DISTANCE IN MILES FROM THE SITE

SECTOR	.250	.500	.750	1.000	1.500	2.000	2.500	3.000	3.500	4.000	4.500
S	8.158E-05	2.595E-05	1.359E-05	6.775E-06	2.775E-06	1.523E-06	9.760E-07	6.872E-07	5.156E-07	4.048E-07	3.287E-07
SSW	2.384E-05	7.676E-06	4.004E-06	1.983E-06	7.970E-07	4.320E-07	2.742E-07	1.917E-07	1.430E-07	1.117E-07	9.031E-08
SW	2.067E-05	6.941E-06	3.685E-06	1.829E-06	7.198E-07	3.845E-07	2.412E-07	1.671E-07	1.236E-07	9.589E-08	7.706E-08
WSW	1.248E-05	4.064E-06	2.111E-06	1.037E-06	4.063E-07	2.165E-07	1.356E-07	9.384E-08	6.939E-08	5.381E-08	4.324E-08
W	1.014E-05	3.247E-06	1.705E-06	8.494E-07	3.419E-07	1.855E-07	1.178E-07	8.233E-08	6.140E-08	4.795E-08	3.876E-08
WNW	9.278E-06	3.054E-06	1.582E-06	7.708E-07	2.972E-07	1.567E-07	9.742E-08	6.699E-08	4.929E-08	3.806E-08	3.047E-08
NW	3.263E-05	1.034E-05	5.325E-06	2.622E-06	1.058E-06	5.750E-07	3.659E-07	2.563E-07	1.915E-07	1.498E-07	1.213E-07
NNW	1.001E-04	3.030E-05	1.524E-05	7.503E-06	3.171E-06	1.778E-06	1.157E-06	8.250E-07	6.254E-07	4.952E-07	4.051E-07
N	1.624E-04	4.968E-05	2.580E-05	1.291E-05	5.409E-06	3.014E-06	1.952E-06	1.386E-06	1.047E-06	8.270E-07	6.749E-07
NNE	7.778E-05	2.317E-05	1.197E-05	5.996E-06	2.518E-06	1.405E-06	9.109E-07	6.474E-07	4.895E-07	3.868E-07	3.158E-07
NE	3.488E-05	1.046E-05	5.400E-06	2.707E-06	1.143E-06	6.396E-07	4.156E-07	2.958E-07	2.239E-07	1.771E-07	1.447E-07
ENE	2.426E-05	7.199E-06	3.669E-06	1.830E-06	7.789E-07	4.384E-07	2.861E-07	2.043E-07	1.551E-07	1.229E-07	1.007E-07
E	2.137E-05	6.325E-06	3.259E-06	1.637E-06	6.973E-07	3.925E-07	2.560E-07	1.828E-07	1.387E-07	1.099E-07	9.000E-08
ESE	3.285E-05	9.599E-06	4.835E-06	2.402E-06	1.031E-06	5.834E-07	3.821E-07	2.737E-07	2.082E-07	1.654E-07	1.357E-07
SE	6.164E-05	1.842E-05	9.507E-06	4.770E-06	2.025E-06	1.137E-06	7.406E-07	5.282E-07	4.004E-07	3.170E-07	2.594E-07
SSE	7.184E-05	2.166E-05	1.112E-05	5.550E-06	2.341E-06	1.310E-06	8.514E-07	6.062E-07	4.589E-07	3.630E-07	2.967E-07

ANNUAL AVERAGE CHI/Q (SEC/METER CUBED) DISTANCE IN MILES FROM THE SITE

SECTOR	5.000	7.500	10.000	15.000	20.000	25.000	30.000	35.000	40.000	45.000	50.000
S	2.740E-07	1.449E-07	9.579E-08	5.654E-08	3.909E-08	2.941E-08	2.334E-08	1.922E-08	1.625E-08	1.402E-08	1.229E-08
SSW	7.502E-08	3.914E-08	2.566E-08	1.500E-08	1.032E-08	7.745E-09	6.133E-09	5.040E-09	4.254E-09	3.666E-09	3.210E-09
SW	6.368E-08	3.257E-08	2.105E-08	1.206E-08	8.181E-09	6.068E-09	4.761E-09	3.882E-09	3.255E-09	2.789E-09	2.429E-09
WSW	3.573E-08	1.828E-08	1.183E-08	6.808E-09	4.656E-09	3.477E-09	2.743E-09	2.247E-09	1.892E-09	1.627E-09	1.422E-09
W	3.220E-08	1.680E-08	1.101E-08	6.417E-09	4.400E-09	3.291E-09	2.599E-09	2.131E-09	1.796E-09	1.545E-09	1.351E-09
WNW	2.513E-08	1.282E-08	8.276E-09	4.742E-09	3.225E-09	2.397E-09	1.885E-09	1.540E-09	1.294E-09	1.110E-09	9.686E-10
NW	1.009E-07	5.297E-08	3.488E-08	2.050E-08	1.416E-08	1.065E-08	8.447E-09	6.953E-09	5.878E-09	5.072E-09	4.446E-09
NNW	3.400E-07	1.842E-07	1.238E-07	7.469E-08	5.238E-08	3.985E-08	3.190E-08	2.645E-08	2.250E-08	1.952E-08	1.719E-08
N	5.652E-07	3.034E-07	2.027E-07	1.213E-07	8.452E-08	6.399E-08	5.103E-08	4.218E-08	3.578E-08	3.096E-08	2.721E-08
NNE	2.646E-07	1.425E-07	9.540E-08	5.724E-08	3.998E-08	3.032E-08	2.422E-08	2.004E-08	1.702E-08	1.474E-08	1.296E-08
NE	1.213E-07	6.539E-08	4.380E-08	2.630E-08	1.837E-08	1.394E-08	1.113E-08	9.210E-09	7.821E-09	6.773E-09	5.957E-09
ENE	8.454E-08	4.590E-08	3.089E-08	1.866E-08	1.308E-08	9.950E-09	7.965E-09	6.603E-09	5.616E-09	4.870E-09	4.288E-09
E	7.556E-08	4.095E-08	2.753E-08	1.659E-08	1.162E-08	8.830E-09	7.062E-09	5.850E-09	4.972E-09	4.310E-09	3.793E-09
ESE	1.141E-07	6.225E-08	4.204E-08	2.551E-08	1.795E-08	1.368E-08	1.097E-08	9.113E-09	7.761E-09	6.739E-09	5.941E-09
SE	2.176E-07	1.176E-07	7.894E-08	4.749E-08	3.321E-08	2.521E-08	2.015E-08	1.668E-08	1.417E-08	1.227E-08	1.080E-08
SSE	2.488E-07	1.343E-07	9.000E-08	5.409E-08	3.782E-08	2.870E-08	2.293E-08	1.898E-08	1.613E-08	1.397E-08	1.229E-08

CHI/Q (SEC/METER CUBED) FOR EACH SEGMENT
SEGMENT BOUNDARIES IN MILES FROM THE SITE

DIRECTION FROM SITE	.5-1	1-2	2-3	3-4	4-5	5-10	10-20	20-30	30-40	40-50
S	1.331E-05	3.108E-06	1.006E-06	5.224E-07	3.310E-07	1.518E-07	5.751E-08	2.956E-08	1.926E-08	1.404E-08
SSW	3.922E-06	8.984E-07	2.833E-07	1.450E-07	9.098E-08	4.112E-08	1.529E-08	7.788E-09	5.053E-09	3.671E-09
SW	3.583E-06	8.172E-07	2.498E-07	1.255E-07	7.768E-08	3.437E-08	1.233E-08	6.109E-09	3.895E-09	2.794E-09
WSW	2.067E-06	4.620E-07	1.405E-07	7.044E-08	4.359E-08	1.929E-08	6.967E-09	3.498E-09	2.254E-09	1.630E-09
W	1.667E-06	3.852E-07	1.217E-07	6.225E-08	3.905E-08	1.765E-08	6.540E-09	3.310E-09	2.137E-09	1.547E-09
WNW	1.548E-06	3.400E-07	1.011E-07	5.007E-08	3.074E-08	1.354E-08	4.853E-09	2.413E-09	1.545E-09	1.112E-09
NW	5.238E-06	1.191E-06	3.778E-07	1.941E-07	1.222E-07	5.558E-08	2.087E-08	1.070E-08	6.970E-09	5.079E-09
NNW	1.515E-05	3.515E-06	1.190E-06	6.328E-07	4.077E-07	1.920E-07	7.569E-08	4.001E-08	2.651E-08	1.954E-08
N	2.538E-05	6.011E-06	2.009E-06	1.060E-06	6.793E-07	3.168E-07	1.230E-07	6.428E-08	4.227E-08	3.100E-08
NNE	1.180E-05	2.796E-06	9.372E-07	4.955E-07	3.179E-07	1.487E-07	5.805E-08	3.046E-08	2.008E-08	1.475E-08
NE	5.327E-06	1.267E-06	4.274E-07	2.266E-07	1.457E-07	6.823E-08	2.666E-08	1.400E-08	9.229E-09	6.782E-09
ENE	3.636E-06	8.611E-07	2.940E-07	1.569E-07	1.013E-07	4.782E-08	1.890E-08	9.991E-09	6.616E-09	4.876E-09
E	3.220E-06	7.707E-07	2.631E-07	1.404E-07	9.056E-08	4.267E-08	1.681E-08	8.867E-09	5.862E-09	4.315E-09
ESE	4.813E-06	1.137E-06	3.924E-07	2.106E-07	1.365E-07	6.479E-08	2.582E-08	1.374E-08	9.130E-09	6.746E-09
SE	9.383E-06	2.240E-06	7.614E-07	4.052E-07	2.610E-07	1.227E-07	4.813E-08	2.532E-08	1.671E-08	1.229E-08
SSE	1.099E-05	2.596E-06	8.757E-07	4.644E-07	2.986E-07	1.400E-07	5.484E-08	2.882E-08	1.902E-08	1.399E-08

VENTS GROUND LEVEL RELEASES - JUL-SEP 2012
2.260 DAY DECAY, UNDEPLETED
CORRECTED USING STANDARD OPEN TERRAIN FACTORS

ANNUAL AVERAGE CHI/Q (SEC/METER CUBED) DISTANCE IN MILES FROM THE SITE

SECTOR	.250	.500	.750	1.000	1.500	2.000	2.500	3.000	3.500	4.000	4.500
S	8.148E-05	2.589E-05	1.354E-05	6.746E-06	2.757E-06	1.510E-06	9.649E-07	6.778E-07	5.073E-07	3.972E-07	3.218E-07
SSW	2.381E-05	7.661E-06	3.993E-06	1.976E-06	7.923E-07	4.286E-07	2.715E-07	1.894E-07	1.409E-07	1.098E-07	8.862E-08
SW	2.065E-05	6.925E-06	3.672E-06	1.820E-06	7.148E-07	3.809E-07	2.384E-07	1.647E-07	1.216E-07	9.409E-08	7.543E-08
WSW	1.247E-05	4.055E-06	2.104E-06	1.032E-06	4.035E-07	2.145E-07	1.340E-07	9.252E-08	6.825E-08	5.279E-08	4.232E-08
W	1.013E-05	3.239E-06	1.698E-06	8.451E-07	3.393E-07	1.836E-07	1.162E-07	8.104E-08	6.027E-08	4.694E-08	3.784E-08
WNW	9.271E-06	3.049E-06	1.578E-06	7.681E-07	2.956E-07	1.556E-07	9.654E-08	6.626E-08	4.866E-08	3.750E-08	2.996E-08
NW	3.259E-05	1.032E-05	5.307E-06	2.611E-06	1.050E-06	5.697E-07	3.616E-07	2.526E-07	1.883E-07	1.469E-07	1.186E-07
NNW	9.997E-05	3.021E-05	1.518E-05	7.461E-06	3.144E-06	1.757E-06	1.140E-06	8.105E-07	6.125E-07	4.835E-07	3.944E-07
N	1.622E-04	4.954E-05	2.569E-05	1.284E-05	5.365E-06	2.981E-06	1.925E-06	1.364E-06	1.027E-06	8.089E-07	6.583E-07
NNE	7.768E-05	2.311E-05	1.192E-05	5.964E-06	2.497E-06	1.390E-06	8.984E-07	6.368E-07	4.801E-07	3.782E-07	3.080E-07
NE	3.483E-05	1.043E-05	5.376E-06	2.691E-06	1.133E-06	6.320E-07	4.093E-07	2.905E-07	2.192E-07	1.728E-07	1.408E-07
ENE	2.422E-05	7.176E-06	3.652E-06	1.818E-06	7.716E-07	4.330E-07	2.816E-07	2.005E-07	1.517E-07	1.199E-07	9.784E-08
E	2.134E-05	6.305E-06	3.244E-06	1.627E-06	6.908E-07	3.876E-07	2.520E-07	1.794E-07	1.357E-07	1.072E-07	8.748E-08
ESE	3.279E-05	9.568E-06	4.812E-06	2.387E-06	1.021E-06	5.757E-07	3.758E-07	2.683E-07	2.035E-07	1.611E-07	1.317E-07
SE	6.154E-05	1.837E-05	9.464E-06	4.742E-06	2.007E-06	1.124E-06	7.295E-07	5.187E-07	3.920E-07	3.095E-07	2.524E-07
SSE	7.174E-05	2.160E-05	1.108E-05	5.519E-06	2.322E-06	1.296E-06	8.394E-07	5.959E-07	4.498E-07	3.548E-07	2.891E-07

ANNUAL AVERAGE CHI/Q (SEC/METER CUBED) DISTANCE IN MILES FROM THE SITE

SECTOR	5.000	7.500	10.000	15.000	20.000	25.000	30.000	35.000	40.000	45.000	50.000
S	2.676E-07	1.397E-07	9.126E-08	5.255E-08	3.544E-08	2.602E-08	2.016E-08	1.620E-08	1.337E-08	1.127E-08	9.648E-09
SSW	7.345E-08	3.790E-08	2.457E-08	1.404E-08	9.456E-09	6.940E-09	5.376E-09	4.323E-09	3.571E-09	3.012E-09	2.582E-09
SW	6.218E-08	3.142E-08	2.007E-08	1.122E-08	7.429E-09	5.380E-09	4.122E-09	3.283E-09	2.689E-09	2.250E-09	1.915E-09
WSW	3.488E-08	1.762E-08	1.126E-08	6.321E-09	4.218E-09	3.073E-09	2.365E-09	1.891E-09	1.554E-09	1.305E-09	1.114E-09
W	3.135E-08	1.613E-08	1.042E-08	5.912E-09	3.944E-09	2.870E-09	2.206E-09	1.761E-09	1.445E-09	1.210E-09	1.031E-09
WNW	2.466E-08	1.246E-08	7.965E-09	4.474E-09	2.984E-09	2.176E-09	1.678E-09	1.345E-09	1.109E-09	9.337E-10	7.996E-10
NW	9.844E-08	5.102E-08	3.316E-08	1.899E-08	1.278E-08	9.369E-09	7.247E-09	5.817E-09	4.797E-09	4.038E-09	3.454E-09
NNW	3.300E-07	1.760E-07	1.165E-07	6.820E-08	4.642E-08	3.428E-08	2.665E-08	2.147E-08	1.775E-08	1.496E-08	1.281E-08
N	5.497E-07	2.910E-07	1.917E-07	1.115E-07	7.560E-08	5.569E-08	4.322E-08	3.477E-08	2.872E-08	2.420E-08	2.072E-08
NNE	2.573E-07	1.366E-07	9.019E-08	5.262E-08	3.576E-08	2.639E-08	2.051E-08	1.652E-08	1.366E-08	1.153E-08	9.876E-09
NE	1.177E-07	6.244E-08	4.118E-08	2.397E-08	1.625E-08	1.196E-08	9.268E-09	7.446E-09	6.139E-09	5.164E-09	4.412E-09
ENE	8.191E-08	4.377E-08	2.900E-08	1.697E-08	1.154E-08	8.512E-09	6.610E-09	5.317E-09	4.390E-09	3.696E-09	3.161E-09
E	7.321E-08	3.906E-08	2.585E-08	1.510E-08	1.026E-08	7.559E-09	5.865E-09	4.715E-09	3.891E-09	3.274E-09	2.799E-09
ESE	1.104E-07	5.925E-08	3.936E-08	2.312E-08	1.576E-08	1.164E-08	9.047E-09	7.284E-09	6.016E-09	5.067E-09	4.334E-09
SE	2.111E-07	1.124E-07	7.429E-08	4.337E-08	2.944E-08	2.170E-08	1.684E-08	1.354E-08	1.118E-08	9.413E-09	8.051E-09
SSE	2.417E-07	1.285E-07	8.493E-08	4.958E-08	3.368E-08	2.484E-08	1.930E-08	1.553E-08	1.283E-08	1.082E-08	9.261E-09

CHI/Q (SEC/METER CUBED) FOR EACH SEGMENT
SEGMENT BOUNDARIES IN MILES FROM THE SITE

DIRECTION FROM SITE	.5-1	1-2	2-3	3-4	4-5	5-10	10-20	20-30	30-40	40-50
S	1.327E-05	3.089E-06	9.953E-07	5.141E-07	3.241E-07	1.466E-07	5.355E-08	2.619E-08	1.626E-08	1.129E-08
SSW	3.911E-06	8.936E-07	2.805E-07	1.429E-07	8.929E-08	3.988E-08	1.434E-08	6.985E-09	4.337E-09	3.018E-09
SW	3.572E-06	8.121E-07	2.469E-07	1.234E-07	7.605E-08	3.321E-08	1.150E-08	5.423E-09	3.296E-09	2.256E-09
WSW	2.061E-06	4.592E-07	1.389E-07	6.930E-08	4.266E-08	1.863E-08	6.484E-09	3.095E-09	1.898E-09	1.308E-09
W	1.661E-06	3.825E-07	1.201E-07	6.112E-08	3.813E-08	1.697E-08	6.040E-09	2.891E-09	1.768E-09	1.213E-09
WNW	1.545E-06	3.384E-07	1.002E-07	4.944E-08	3.023E-08	1.317E-08	4.588E-09	2.192E-09	1.350E-09	9.359E-10
NW	5.222E-06	1.183E-06	3.735E-07	1.909E-07	1.195E-07	5.362E-08	1.938E-08	9.430E-09	5.837E-09	4.047E-09
NNW	1.509E-05	3.487E-06	1.173E-06	6.199E-07	3.969E-07	1.838E-07	6.926E-08	3.447E-08	2.153E-08	1.499E-08
N	2.528E-05	5.967E-06	1.982E-06	1.040E-06	6.627E-07	3.044E-07	1.134E-07	5.601E-08	3.488E-08	2.425E-08
NNE	1.176E-05	2.775E-06	9.247E-07	4.860E-07	3.100E-07	1.428E-07	5.347E-08	2.653E-08	1.657E-08	1.155E-08
NE	5.305E-06	1.256E-06	4.212E-07	2.219E-07	1.417E-07	6.526E-08	2.436E-08	1.203E-08	7.469E-09	5.175E-09
ENE	3.620E-06	8.537E-07	2.895E-07	1.535E-07	9.846E-08	4.568E-08	1.723E-08	8.558E-09	5.333E-09	3.703E-09
E	3.206E-06	7.641E-07	2.591E-07	1.373E-07	8.804E-08	4.078E-08	1.534E-08	7.601E-09	4.730E-09	3.281E-09
ESE	4.791E-06	1.127E-06	3.861E-07	2.059E-07	1.325E-07	6.177E-08	2.346E-08	1.170E-08	7.305E-09	5.077E-09
SE	9.344E-06	2.222E-06	7.503E-07	3.968E-07	2.540E-07	1.174E-07	4.405E-08	2.182E-08	1.358E-08	9.432E-09
SSE	1.094E-05	2.576E-06	8.637E-07	4.554E-07	2.910E-07	1.343E-07	5.037E-08	2.498E-08	1.558E-08	1.084E-08

VENTS GROUND LEVEL RELEASES - JUL-SEP 2012
8.000 DAY DECAY, DEPLETED
CORRECTED USING STANDARD OPEN TERRAIN FACTORS

ANNUAL AVERAGE CHI/Q (SEC/METER CUBED) DISTANCE IN MILES FROM THE SITE

SECTOR	.250	.500	.750	1.000	1.500	2.000	2.500	3.000	3.500	4.000	4.500
S	7.718E-05	2.368E-05	1.210E-05	5.923E-06	2.352E-06	1.258E-06	7.880E-07	5.437E-07	4.005E-07	3.091E-07	2.470E-07
SSW	2.256E-05	7.006E-06	3.565E-06	1.734E-06	6.757E-07	3.569E-07	2.215E-07	1.517E-07	1.111E-07	8.533E-08	6.791E-08
SW	1.956E-05	6.334E-06	3.281E-06	1.599E-06	6.101E-07	3.175E-07	1.948E-07	1.322E-07	9.600E-08	7.322E-08	5.791E-08
WSW	1.181E-05	3.709E-06	1.879E-06	9.064E-07	3.444E-07	1.788E-07	1.095E-07	7.424E-08	5.389E-08	4.109E-08	3.249E-08
W	9.594E-06	2.963E-06	1.518E-06	7.425E-07	2.898E-07	1.532E-07	9.504E-08	6.510E-08	4.766E-08	3.659E-08	2.911E-08
WNW	8.779E-06	2.787E-06	1.408E-06	6.740E-07	2.520E-07	1.295E-07	7.871E-08	5.305E-08	3.832E-08	2.910E-08	2.293E-08
NW	3.087E-05	9.437E-06	4.740E-06	2.292E-06	8.965E-07	4.749E-07	2.954E-07	2.027E-07	1.487E-07	1.144E-07	9.113E-08
NNW	9.471E-05	2.764E-05	1.357E-05	6.557E-06	2.687E-06	1.468E-06	9.335E-07	6.520E-07	4.851E-07	3.776E-07	3.040E-07
N	1.536E-04	4.533E-05	2.296E-05	1.128E-05	4.583E-06	2.488E-06	1.575E-06	1.096E-06	8.128E-07	6.309E-07	5.067E-07
NNE	7.359E-05	2.114E-05	1.065E-05	5.241E-06	2.133E-06	1.160E-06	7.350E-07	5.118E-07	3.799E-07	2.950E-07	2.371E-07
NE	3.300E-05	9.541E-06	4.806E-06	2.366E-06	9.681E-07	5.278E-07	3.352E-07	2.338E-07	1.737E-07	1.350E-07	1.086E-07
ENE	2.295E-05	6.568E-06	3.265E-06	1.599E-06	6.597E-07	3.618E-07	2.307E-07	1.614E-07	1.203E-07	9.369E-08	7.550E-08
E	2.022E-05	5.771E-06	2.901E-06	1.431E-06	5.906E-07	3.238E-07	2.065E-07	1.444E-07	1.076E-07	8.379E-08	6.750E-08
ESE	3.107E-05	8.758E-06	4.303E-06	2.099E-06	8.731E-07	4.813E-07	3.080E-07	2.162E-07	1.614E-07	1.260E-07	1.017E-07
SE	5.831E-05	1.681E-05	8.461E-06	4.169E-06	1.715E-06	9.384E-07	5.974E-07	4.174E-07	3.106E-07	2.417E-07	1.946E-07
SSE	6.797E-05	1.976E-05	9.900E-06	4.850E-06	1.984E-06	1.082E-06	6.869E-07	4.792E-07	3.561E-07	2.768E-07	2.227E-07

ANNUAL AVERAGE CHI/Q (SEC/METER CUBED) DISTANCE IN MILES FROM THE SITE

SECTOR	5.000	7.500	10.000	15.000	20.000	25.000	30.000	35.000	40.000	45.000	50.000
S	2.029E-07	1.011E-07	6.347E-08	3.443E-08	2.219E-08	1.571E-08	1.180E-08	9.229E-09	7.440E-09	6.136E-09	5.154E-09
SSW	5.558E-08	2.734E-08	1.703E-08	9.151E-09	5.878E-09	4.151E-09	3.113E-09	2.433E-09	1.959E-09	1.615E-09	1.356E-09
SW	4.715E-08	2.273E-08	1.395E-08	7.346E-09	4.648E-09	3.244E-09	2.409E-09	1.867E-09	1.494E-09	1.224E-09	1.022E-09
WSW	2.645E-08	1.275E-08	7.835E-09	4.144E-09	2.643E-09	1.856E-09	1.386E-09	1.079E-09	8.664E-10	7.122E-10	5.964E-10
W	2.382E-08	1.171E-08	7.280E-09	3.898E-09	2.490E-09	1.750E-09	1.307E-09	1.018E-09	8.174E-10	6.718E-10	5.624E-10
WNW	1.863E-08	8.965E-09	5.500E-09	2.900E-09	1.842E-09	1.290E-09	9.613E-10	7.476E-10	5.998E-10	4.928E-10	4.126E-10
NW	7.468E-08	3.694E-08	2.309E-08	1.247E-08	8.026E-09	5.676E-09	4.260E-09	3.332E-09	2.685E-09	2.214E-09	1.859E-09
NNW	2.513E-07	1.282E-07	8.174E-08	4.525E-08	2.954E-08	2.111E-08	1.597E-08	1.256E-08	1.018E-08	8.426E-09	7.100E-09
N	4.180E-07	2.114E-07	1.340E-07	7.362E-08	4.780E-08	3.401E-08	2.565E-08	2.013E-08	1.627E-08	1.345E-08	1.131E-08
NNE	1.957E-07	9.926E-08	6.307E-08	3.474E-08	2.261E-08	1.612E-08	1.217E-08	9.563E-09	7.737E-09	6.401E-09	5.390E-09
NE	8.965E-08	4.550E-08	2.892E-08	1.592E-08	1.036E-08	7.377E-09	5.566E-09	4.370E-09	3.533E-09	2.921E-09	2.457E-09
ENE	6.245E-08	3.192E-08	2.038E-08	1.129E-08	7.369E-09	5.263E-09	3.979E-09	3.130E-09	2.534E-09	2.097E-09	1.766E-09
E	5.582E-08	2.848E-08	1.816E-08	1.004E-08	6.547E-09	4.671E-09	3.529E-09	2.774E-09	2.244E-09	1.857E-09	1.563E-09
ESE	8.426E-08	4.327E-08	2.772E-08	1.542E-08	1.009E-08	7.225E-09	5.472E-09	4.310E-09	3.493E-09	2.894E-09	2.439E-09
SE	1.608E-07	8.186E-08	5.212E-08	2.877E-08	1.873E-08	1.336E-08	1.009E-08	7.925E-09	6.410E-09	5.302E-09	4.463E-09
SSE	1.839E-07	9.348E-08	5.947E-08	3.280E-08	2.136E-08	1.523E-08	1.150E-08	9.038E-09	7.312E-09	6.049E-09	5.093E-09

CHI/Q (SEC/METER CUBED) FOR EACH SEGMENT
SEGMENT BOUNDARIES IN MILES FROM THE SITE

DIRECTION FROM SITE	.5-1	1-2	2-3	3-4	4-5	5-10	10-20	20-30	30-40	40-50
S	1.193E-05	2.660E-06	8.157E-07	4.066E-07	2.491E-07	1.070E-07	3.544E-08	1.587E-08	9.281E-09	6.159E-09
SSW	3.516E-06	7.692E-07	2.297E-07	1.129E-07	6.851E-08	2.903E-08	9.446E-09	4.197E-09	2.447E-09	1.621E-09
SW	3.212E-06	6.997E-07	2.025E-07	9.766E-08	5.846E-08	2.426E-08	7.615E-09	3.284E-09	1.880E-09	1.229E-09
WSW	1.853E-06	3.957E-07	1.139E-07	5.483E-08	3.280E-08	1.361E-08	4.297E-09	1.878E-09	1.086E-09	7.150E-10
W	1.494E-06	3.296E-07	9.856E-08	4.842E-08	2.937E-08	1.243E-08	4.024E-09	1.770E-09	1.024E-09	6.744E-10
WNW	1.388E-06	2.913E-07	8.199E-08	3.901E-08	2.316E-08	9.573E-09	3.007E-09	1.306E-09	7.523E-10	4.948E-10
NW	4.696E-06	1.019E-06	3.062E-07	1.511E-07	9.192E-08	3.918E-08	1.286E-08	5.737E-09	3.351E-09	2.222E-09
NNW	1.358E-05	3.005E-06	9.633E-07	4.918E-07	3.063E-07	1.349E-07	4.638E-08	2.130E-08	1.263E-08	8.453E-09
N	2.274E-05	5.141E-06	1.627E-06	8.244E-07	5.106E-07	2.229E-07	7.557E-08	3.434E-08	2.023E-08	1.349E-08
NNE	1.058E-05	2.391E-06	7.590E-07	3.852E-07	2.389E-07	1.046E-07	3.565E-08	1.627E-08	9.612E-09	6.422E-09
NE	4.774E-06	1.083E-06	3.460E-07	1.761E-07	1.094E-07	4.794E-08	1.634E-08	7.447E-09	4.393E-09	2.931E-09
ENE	3.259E-06	7.360E-07	2.379E-07	1.219E-07	7.606E-08	3.358E-08	1.157E-08	5.311E-09	3.145E-09	2.104E-09
E	2.885E-06	6.587E-07	2.130E-07	1.090E-07	6.800E-08	2.997E-08	1.029E-08	4.715E-09	2.788E-09	1.863E-09
ESE	4.313E-06	9.714E-07	3.175E-07	1.636E-07	1.024E-07	4.547E-08	1.579E-08	7.289E-09	4.331E-09	2.903E-09
SE	8.409E-06	1.915E-06	6.163E-07	3.149E-07	1.960E-07	8.619E-08	2.950E-08	1.348E-08	7.965E-09	5.320E-09
SSE	9.848E-06	2.220E-06	7.091E-07	3.611E-07	2.244E-07	9.846E-08	3.364E-08	1.537E-08	9.084E-09	6.070E-09

VENTS GROUND LEVEL RELEASES - JUL-SEP 2012
CORRECTED USING STANDARD OPEN TERRAIN FACTORS

********** RELATIVE DEPOSITION PER UNIT AREA (M**-2) AT FIXED POINTS BY DOWNWIND SECTORS **********

DIRECTION FROM SITE	DISTANCES IN MILES .25	.50	.75	1.00	1.50	2.00	2.50	3.00	3.50	4.00	4.50
S	3.425E-07	1.158E-07	5.946E-08	2.827E-08	1.015E-08	5.035E-09	2.965E-09	1.941E-09	1.366E-09	1.012E-09	7.802E-10
SSW	1.165E-07	3.941E-08	2.023E-08	9.619E-09	3.455E-09	1.714E-09	1.009E-09	6.607E-10	4.649E-10	3.445E-10	2.655E-10
SW	8.921E-08	3.017E-08	1.549E-08	7.364E-09	2.645E-09	1.312E-09	7.724E-10	5.058E-10	3.559E-10	2.637E-10	2.032E-10
WSW	5.249E-08	1.775E-08	9.114E-09	4.333E-09	1.556E-09	7.719E-10	4.545E-10	2.976E-10	2.094E-10	1.552E-10	1.196E-10
W	3.991E-08	1.350E-08	6.930E-09	3.295E-09	1.183E-09	5.869E-10	3.456E-10	2.263E-10	1.592E-10	1.180E-10	9.093E-11
WNW	6.820E-08	2.306E-08	1.184E-08	5.629E-09	2.022E-09	1.003E-09	5.905E-10	3.866E-10	2.721E-10	2.016E-10	1.554E-10
NW	1.733E-07	5.859E-08	3.008E-08	1.430E-08	5.137E-09	2.548E-09	1.500E-09	9.823E-10	6.912E-10	5.122E-10	3.947E-10
NNW	2.580E-07	8.724E-08	4.479E-08	2.130E-08	7.649E-09	3.793E-09	2.234E-09	1.463E-09	1.029E-09	7.627E-10	5.877E-10
N	4.565E-07	1.544E-07	7.926E-08	3.768E-08	1.354E-08	6.713E-09	3.953E-09	2.588E-09	1.821E-09	1.350E-09	1.040E-09
NNE	2.324E-07	7.860E-08	4.036E-08	1.919E-08	6.892E-09	3.418E-09	2.012E-09	1.318E-09	9.272E-10	6.872E-10	5.295E-10
NE	6.747E-08	2.282E-08	1.171E-08	5.569E-09	2.000E-09	9.921E-10	5.841E-10	3.825E-10	2.691E-10	1.995E-10	1.537E-10
ENE	3.696E-08	1.250E-08	6.417E-09	3.051E-09	1.096E-09	5.435E-10	3.200E-10	2.095E-10	1.474E-10	1.093E-10	8.420E-11
E	3.064E-08	1.036E-08	5.319E-09	2.529E-09	9.084E-10	4.505E-10	2.652E-10	1.737E-10	1.222E-10	9.057E-11	6.979E-11
ESE	5.177E-08	1.751E-08	8.988E-09	4.273E-09	1.535E-09	7.612E-10	4.482E-10	2.935E-10	2.065E-10	1.530E-10	1.179E-10
SE	1.097E-07	3.709E-08	1.904E-08	9.052E-09	3.252E-09	1.613E-09	9.495E-10	6.217E-10	4.375E-10	3.242E-10	2.498E-10
SSE	1.905E-07	6.442E-08	3.308E-08	1.573E-08	5.649E-09	2.801E-09	1.649E-09	1.080E-09	7.600E-10	5.632E-10	4.340E-10

DIRECTION FROM SITE	DISTANCES IN MILES 5.00	7.50	10.00	15.00	20.00	25.00	30.00	35.00	40.00	45.00	50.00
S	6.198E-10	2.753E-10	1.668E-10	8.430E-11	5.102E-11	3.421E-11	2.451E-11	1.841E-11	1.431E-11	1.143E-11	9.331E-12
SSW	2.109E-10	9.370E-11	5.676E-11	2.869E-11	1.736E-11	1.164E-11	8.342E-12	6.264E-12	4.870E-12	3.890E-12	3.175E-12
SW	1.615E-10	7.173E-11	4.345E-11	2.196E-11	1.329E-11	8.912E-12	6.386E-12	4.795E-12	3.728E-12	2.978E-12	2.431E-12
WSW	9.501E-11	4.221E-11	2.557E-11	1.292E-11	7.822E-12	5.244E-12	3.758E-12	2.822E-12	2.194E-12	1.752E-12	1.430E-12
W	7.224E-11	3.209E-11	1.944E-11	9.826E-12	5.947E-12	3.987E-12	2.857E-12	2.145E-12	1.668E-12	1.332E-12	1.088E-12
WNW	1.234E-10	5.483E-11	3.322E-11	1.679E-11	1.016E-11	6.813E-12	4.882E-12	3.666E-12	2.850E-12	2.277E-12	1.858E-12
NW	3.136E-10	1.393E-10	8.438E-11	4.265E-11	2.582E-11	1.731E-11	1.240E-11	9.313E-12	7.241E-12	5.784E-12	4.721E-12
NNW	4.669E-10	2.074E-10	1.256E-10	6.351E-11	3.844E-11	2.577E-11	1.847E-11	1.387E-11	1.078E-11	8.613E-12	7.030E-12
N	8.263E-10	3.671E-10	2.223E-10	1.124E-10	6.802E-11	4.561E-11	3.268E-11	2.454E-11	1.908E-11	1.524E-11	1.244E-11
NNE	4.207E-10	1.869E-10	1.132E-10	5.722E-11	3.463E-11	2.322E-11	1.664E-11	1.249E-11	9.714E-12	7.760E-12	6.334E-12
NE	1.221E-10	5.425E-11	3.286E-11	1.661E-11	1.005E-11	6.740E-12	4.830E-12	3.627E-12	2.820E-12	2.252E-12	1.838E-12
ENE	6.689E-11	2.972E-11	1.800E-11	9.099E-12	5.507E-12	3.692E-12	2.646E-12	1.987E-12	1.545E-12	1.234E-12	1.007E-12
E	5.545E-11	2.463E-11	1.492E-11	7.542E-12	4.565E-12	3.060E-12	2.193E-12	1.647E-12	1.280E-12	1.023E-12	8.348E-13
ESE	9.369E-11	4.162E-11	2.521E-11	1.274E-11	7.713E-12	5.171E-12	3.706E-12	2.783E-12	2.163E-12	1.728E-12	1.411E-12
SE	1.985E-10	8.818E-11	5.341E-11	2.700E-11	1.634E-11	1.096E-11	7.850E-12	5.895E-12	4.583E-12	3.661E-12	2.988E-12
SSE	3.448E-10	1.532E-10	9.279E-11	4.690E-11	2.839E-11	1.903E-11	1.364E-11	1.024E-11	7.962E-12	6.360E-12	5.191E-12

********** RELATIVE DEPOSITION PER UNIT AREA (M**-2) BY DOWNWIND SECTORS **********

DIRECTION FROM SITE	SEGMENT BOUNDARIES IN MILES .5-1	1-2	2-3	3-4	4-5	5-10	10-20	20-30	30-40	40-50
S	5.812E-08	1.190E-08	3.108E-09	1.396E-09	7.896E-10	3.036E-10	8.784E-11	3.482E-11	1.859E-11	1.151E-11
SSW	1.978E-08	4.051E-09	1.058E-09	4.750E-10	2.687E-10	1.033E-10	2.989E-11	1.185E-11	6.327E-12	3.916E-12
SW	1.514E-08	3.101E-09	8.096E-10	3.636E-10	2.057E-10	7.910E-11	2.288E-11	9.070E-12	4.843E-12	2.998E-12
WSW	8.909E-09	1.825E-09	4.764E-10	2.140E-10	1.210E-10	4.655E-11	1.347E-11	5.337E-12	2.850E-12	1.764E-12
W	6.774E-09	1.387E-09	3.622E-10	1.627E-10	9.203E-11	3.539E-11	1.024E-11	4.058E-12	2.167E-12	1.341E-12
WNW	1.157E-08	2.371E-09	6.189E-10	2.780E-10	1.572E-10	6.047E-11	1.749E-11	6.933E-12	3.703E-12	2.292E-12
NW	2.940E-08	6.023E-09	1.572E-09	7.062E-10	3.995E-10	1.536E-10	4.444E-11	1.761E-11	9.406E-12	5.822E-12
NNW	4.378E-08	8.968E-09	2.341E-09	1.051E-09	5.948E-10	2.287E-10	6.618E-11	2.623E-11	1.401E-11	8.669E-12
N	7.748E-08	1.587E-08	4.143E-09	1.861E-09	1.053E-09	4.048E-10	1.171E-10	4.641E-11	2.478E-11	1.534E-11
NNE	3.945E-08	8.080E-09	2.109E-09	9.474E-10	5.359E-10	2.061E-10	5.962E-11	2.363E-11	1.262E-11	7.811E-12
NE	1.145E-08	2.345E-09	6.123E-10	2.750E-10	1.556E-10	5.982E-11	1.731E-11	6.859E-12	3.663E-12	2.267E-12
ENE	6.272E-09	1.285E-09	3.354E-10	1.506E-10	8.522E-11	3.277E-11	9.481E-12	3.758E-12	2.007E-12	1.242E-12
E	5.199E-09	1.065E-09	2.780E-10	1.249E-10	7.064E-11	2.716E-11	7.858E-12	3.115E-12	1.663E-12	1.029E-12
ESE	8.785E-09	1.800E-09	4.698E-10	2.110E-10	1.194E-10	4.590E-11	1.328E-11	5.263E-12	2.810E-12	1.740E-12
SE	1.861E-08	3.812E-09	9.952E-10	4.470E-10	2.529E-10	9.724E-11	2.813E-11	1.115E-11	5.954E-12	3.685E-12
SSE	3.233E-08	6.623E-09	1.729E-09	7.765E-10	4.393E-10	1.689E-10	4.887E-11	1.937E-11	1.034E-11	6.402E-12

VENTS GROUND LEVEL RELEASES - JUL-SEP 2012
CORRECTED USING STANDARD OPEN TERRAIN FACTORS
SPECIFIC POINTS OF INTEREST

RELEASE	TYPE OF	DIRECTION	DIST.	X/Q NO DECAY UNDEPLETED	X/Q 2.26 DAY DECAY UNDEPLETED	X/Q 8.0 DAY DECAY DEPLETED	D/Q
A	Site Boundary	S	.80	1.2E-05	1.2E-05	1.0E-05	5.1E-08
A	Site Boundary	SSW	.82	3.2E-06	3.2E-06	2.8E-06	1.6E-08
A	Site Boundary	SW	.97	1.9E-06	1.9E-06	1.7E-06	7.9E-09
A	Site Boundary	WSW	.93	1.3E-06	1.2E-06	1.1E-06	5.3E-09
A	Site Boundary	W	.91	1.1E-06	1.1E-06	9.3E-07	4.2E-09
A	Site Boundary	WNW	.94	9.0E-07	9.0E-07	7.9E-07	6.6E-09
A	Site Boundary	NW	.81	4.4E-06	4.4E-06	3.9E-06	2.5E-08
A	Site Boundary	NNW	.69	1.8E-05	1.8E-05	1.6E-05	5.2E-08
A	Site Boundary	N	.67	3.0E-05	3.0E-05	2.7E-05	9.5E-08
A	Site Boundary	NNE	.60	1.7E-05	1.7E-05	1.5E-05	5.8E-08
A	Site Boundary	NE	.62	7.2E-06	7.2E-06	6.5E-06	1.6E-08
A	Site Boundary	ENE	.59	5.5E-06	5.5E-06	5.0E-06	9.6E-09
A	Site Boundary	E	.53	5.8E-06	5.8E-06	5.3E-06	9.6E-09
A	Site Boundary	ESE	.54	8.4E-06	8.4E-06	7.7E-06	1.6E-08
A	Site Boundary	SE	.65	1.2E-05	1.2E-05	1.1E-05	2.4E-08
A	Site Boundary	SSE	.81	9.2E-06	9.1E-06	8.1E-06	2.7E-08
A	Nearest Res	SSW	3.00	1.9E-07	1.9E-07	1.5E-07	6.6E-10
A	Nearest Res	SW	1.30	9.9E-07	9.9E-07	8.5E-07	3.8E-09
A	Nearest Res	WSW	1.90	2.4E-07	2.4E-07	2.0E-07	8.7E-10
A	Nearest Res	W	2.90	8.8E-08	8.7E-08	7.0E-08	2.4E-10
A	Nearest Res	WNW	1.70	2.2E-07	2.2E-07	1.9E-07	1.5E-09
A	Nearest Res	NW	.90	3.4E-06	3.4E-06	3.0E-06	1.9E-08
A	Nearest Res	NNW	1.90	2.0E-06	1.9E-06	1.6E-06	4.3E-09
A	Nearest Res	N	3.00	1.4E-06	1.4E-06	1.1E-06	2.6E-09
A	Nearest Res	NNE	1.90	1.6E-06	1.5E-06	1.3E-06	3.9E-09
A	Nearest Res	NE	3.00	3.0E-07	2.9E-07	2.3E-07	3.8E-10
A	Nearest Res	ENE	1.70	6.0E-07	6.0E-07	5.1E-07	8.1E-10
A	Nearest Res	E	2.20	3.3E-07	3.2E-07	2.7E-07	3.6E-10
A	Nearest Res	ESE	2.30	4.5E-07	4.4E-07	3.6E-07	5.5E-10
A	Nearest Res	SE	3.00	5.3E-07	5.2E-07	4.2E-07	6.2E-10
A	Nearest Cow	NNW	3.50	6.3E-07	6.1E-07	4.9E-07	1.0E-09
A	Nearest Garde	SSW	3.00	1.9E-07	1.9E-07	1.5E-07	6.6E-10
A	Nearest Garde	SW	1.30	9.9E-07	9.9E-07	8.5E-07	3.8E-09
A	Nearest Garde	WSW	1.90	2.4E-07	2.4E-07	2.0E-07	8.7E-10
A	Nearest Garde	W	2.90	8.8E-08	8.7E-08	7.0E-08	2.4E-10
A	Nearest Garde	WNW	2.40	1.1E-07	1.1E-07	8.6E-08	6.5E-10
A	Nearest Garde	NW	2.90	2.7E-07	2.7E-07	2.2E-07	1.1E-09
A	Nearest Garde	NNW	2.80	9.4E-07	9.2E-07	7.5E-07	1.7E-09
A	Nearest Garde	ENE	1.70	6.0E-07	6.0E-07	5.1E-07	8.1E-10
A	Nearest Garde	E	2.20	3.3E-07	3.2E-07	2.7E-07	3.6E-10
A	Nearest Garde	ESE	2.30	4.5E-07	4.4E-07	3.6E-07	5.5E-10

Atmospheric Diffusion Estimates

Ground Level Releases

October-December 2012

VENTS GROUND LEVEL RELEASES - OCT-DEC 2012
NO DECAY, UNDEPLETED
CORRECTED USING STANDARD OPEN TERRAIN FACTORS

ANNUAL AVERAGE CHI/Q (SEC/METER CUBED) DISTANCE IN MILES FROM THE SITE

SECTOR	.250	.500	.750	1.000	1.500	2.000	2.500	3.000	3.500	4.000	4.500
S	4.710E-05	1.578E-05	8.441E-06	4.225E-06	1.700E-06	9.212E-07	5.844E-07	4.082E-07	3.042E-07	2.374E-07	1.918E-07
SSW	2.328E-05	7.350E-06	3.743E-06	1.843E-06	7.637E-07	4.225E-07	2.722E-07	1.926E-07	1.450E-07	1.142E-07	9.297E-08
SW	1.118E-05	3.588E-06	1.835E-06	9.039E-07	3.706E-07	2.036E-07	1.304E-07	9.183E-08	6.889E-08	5.408E-08	4.391E-08
WSW	1.008E-05	3.247E-06	1.695E-06	8.445E-07	3.443E-07	1.883E-07	1.202E-07	8.443E-08	6.319E-08	4.950E-08	4.012E-08
W	1.176E-05	4.047E-06	2.231E-06	1.131E-06	4.482E-07	2.402E-07	1.510E-07	1.047E-07	7.754E-08	6.017E-08	4.837E-08
WNW	2.084E-05	6.815E-06	3.541E-06	1.749E-06	7.045E-07	3.823E-07	2.428E-07	1.698E-07	1.267E-07	9.895E-08	8.002E-08
NW	4.173E-05	1.378E-05	7.297E-06	3.641E-06	1.475E-06	8.031E-07	5.114E-07	3.583E-07	2.677E-07	2.094E-07	1.695E-07
NNW	9.425E-05	2.886E-05	1.493E-05	7.456E-06	3.124E-06	1.741E-06	1.127E-06	8.006E-07	6.048E-07	4.776E-07	3.897E-07
N	1.580E-04	4.768E-05	2.437E-05	1.213E-05	5.141E-06	2.886E-06	1.879E-06	1.340E-06	1.016E-06	8.042E-07	6.579E-07
NNE	7.019E-05	2.141E-05	1.099E-05	5.474E-06	2.307E-06	1.291E-06	8.382E-07	5.966E-07	4.515E-07	3.571E-07	2.918E-07
NE	4.364E-05	1.323E-05	6.791E-06	3.387E-06	1.429E-06	7.995E-07	5.194E-07	3.697E-07	2.798E-07	2.213E-07	1.809E-07
ENE	3.368E-05	1.036E-05	5.246E-06	2.588E-06	1.085E-06	6.051E-07	3.922E-07	2.787E-07	2.106E-07	1.664E-07	1.359E-07
E	3.250E-05	9.917E-06	4.988E-06	2.456E-06	1.042E-06	5.851E-07	3.812E-07	2.720E-07	2.063E-07	1.634E-07	1.337E-07
ESE	3.476E-05	1.095E-05	5.818E-06	2.938E-06	1.214E-06	6.696E-07	4.304E-07	3.038E-07	2.283E-07	1.795E-07	1.459E-07
SE	6.380E-05	1.986E-05	1.022E-05	5.078E-06	2.114E-06	1.173E-06	7.571E-07	5.363E-07	4.042E-07	3.186E-07	2.596E-07
SSE	7.349E-05	2.295E-05	1.170E-05	5.778E-06	2.407E-06	1.336E-06	8.628E-07	6.114E-07	4.612E-07	3.636E-07	2.964E-07

ANNUAL AVERAGE CHI/Q (SEC/METER CUBED) DISTANCE IN MILES FROM THE SITE

SECTOR	5.000	7.500	10.000	15.000	20.000	25.000	30.000	35.000	40.000	45.000	50.000
S	1.591E-07	8.256E-08	5.388E-08	3.122E-08	2.130E-08	1.587E-08	1.249E-08	1.021E-08	8.582E-09	7.366E-09	6.427E-09
SSW	7.769E-08	4.139E-08	2.752E-08	1.637E-08	1.137E-08	8.592E-09	6.842E-09	5.649E-09	4.788E-09	4.140E-09	3.637E-09
SW	3.660E-08	1.931E-08	1.276E-08	7.523E-09	5.195E-09	3.907E-09	3.100E-09	2.552E-09	2.158E-09	1.862E-09	1.632E-09
WSW	3.338E-08	1.751E-08	1.151E-08	6.742E-09	4.633E-09	3.471E-09	2.746E-09	2.254E-09	1.902E-09	1.637E-09	1.433E-09
W	3.995E-08	2.036E-08	1.311E-08	7.454E-09	5.013E-09	3.692E-09	2.879E-09	2.335E-09	1.948E-09	1.662E-09	1.441E-09
WNW	6.646E-08	3.465E-08	2.270E-08	1.324E-08	9.091E-09	6.807E-09	5.381E-09	4.416E-09	3.724E-09	3.206E-09	2.805E-09
NW	1.409E-07	7.363E-08	4.830E-08	2.819E-08	1.933E-08	1.446E-08	1.142E-08	9.359E-09	7.885E-09	6.782E-09	5.929E-09
NNW	3.263E-07	1.751E-07	1.170E-07	6.996E-08	4.877E-08	3.693E-08	2.946E-08	2.435E-08	2.066E-08	1.788E-08	1.572E-08
N	5.520E-07	2.985E-07	2.004E-07	1.207E-07	8.448E-08	6.417E-08	5.131E-08	4.250E-08	3.612E-08	3.131E-08	2.755E-08
NNE	2.446E-07	1.318E-07	8.829E-08	5.300E-08	3.702E-08	2.808E-08	2.243E-08	1.856E-08	1.576E-08	1.365E-08	1.201E-08
NE	1.516E-07	8.174E-08	5.476E-08	3.288E-08	2.297E-08	1.742E-08	1.392E-08	1.152E-08	9.781E-09	8.471E-09	7.451E-09
ENE	1.138E-07	6.119E-08	4.093E-08	2.454E-08	1.713E-08	1.299E-08	1.038E-08	8.588E-09	7.293E-09	6.317E-09	5.557E-09
E	1.123E-07	6.079E-08	4.085E-08	2.463E-08	1.726E-08	1.312E-08	1.050E-08	8.702E-09	7.400E-09	6.417E-09	5.651E-09
ESE	1.217E-07	6.447E-08	4.267E-08	2.519E-08	1.739E-08	1.308E-08	1.037E-08	8.530E-09	7.207E-09	6.214E-09	5.444E-09
SE	2.170E-07	1.158E-07	7.709E-08	4.588E-08	3.187E-08	2.408E-08	1.917E-08	1.582E-08	1.341E-08	1.159E-08	1.018E-08
SSE	2.479E-07	1.326E-07	8.836E-08	5.271E-08	3.669E-08	2.775E-08	2.212E-08	1.828E-08	1.550E-08	1.341E-08	1.179E-08

CHI/Q (SEC/METER CUBED) FOR EACH SEGMENT

SEGMENT BOUNDARIES IN MILES FROM THE SITE

DIRECTION FROM SITE	.5-1	1-2	2-3	3-4	4-5	5-10	10-20	20-30	30-40	40-50
S	8.198E-06	1.915E-06	6.037E-07	3.084E-07	1.932E-07	8.683E-08	3.185E-08	1.596E-08	1.024E-08	7.379E-09
SSW	3.700E-06	8.520E-07	2.804E-07	1.468E-07	9.360E-08	4.329E-08	1.663E-08	8.634E-09	5.662E-09	4.146E-09
SW	1.811E-06	4.149E-07	1.345E-07	6.980E-08	4.421E-08	2.024E-08	7.652E-09	3.928E-09	2.558E-09	1.864E-09
WSW	1.662E-06	3.861E-07	1.241E-07	6.405E-08	4.040E-08	1.837E-08	6.865E-09	3.491E-09	2.260E-09	1.640E-09
W	2.146E-06	5.075E-07	1.563E-07	7.869E-08	4.875E-08	2.149E-08	7.627E-09	3.719E-09	2.343E-09	1.665E-09
WNW	3.472E-06	7.935E-07	2.508E-07	1.284E-07	8.061E-08	3.641E-08	1.350E-08	6.846E-09	4.428E-09	3.211E-09
NW	7.113E-06	1.658E-06	5.279E-07	2.714E-07	1.707E-07	7.732E-08	2.872E-08	1.454E-08	9.385E-09	6.792E-09
NNW	1.470E-05	3.472E-06	1.160E-06	6.123E-07	3.923E-07	1.829E-07	7.099E-08	3.710E-08	2.440E-08	1.790E-08
N	2.411E-05	5.692E-06	1.932E-06	1.028E-06	6.620E-07	3.113E-07	1.223E-07	6.444E-08	4.259E-08	3.134E-08
NNE	1.086E-05	2.559E-06	8.622E-07	4.570E-07	2.936E-07	1.375E-07	5.374E-08	2.820E-08	1.860E-08	1.367E-08
NE	6.709E-06	1.584E-06	5.342E-07	2.832E-07	1.820E-07	8.528E-08	3.334E-08	1.750E-08	1.154E-08	8.482E-09
ENE	5.201E-06	1.206E-06	4.035E-07	2.132E-07	1.367E-07	6.388E-08	2.489E-08	1.305E-08	8.606E-09	6.325E-09
E	4.958E-06	1.153E-06	3.919E-07	2.087E-07	1.346E-07	6.336E-08	2.496E-08	1.318E-08	8.720E-09	6.425E-09
ESE	5.678E-06	1.355E-06	4.435E-07	2.313E-07	1.469E-07	6.751E-08	2.561E-08	1.314E-08	8.551E-09	6.223E-09
SE	1.008E-05	2.355E-06	7.797E-07	4.093E-07	2.613E-07	1.211E-07	4.659E-08	2.419E-08	1.586E-08	1.161E-08
SSE	1.157E-05	2.680E-06	8.884E-07	4.669E-07	2.984E-07	1.386E-07	5.351E-08	2.788E-08	1.832E-08	1.343E-08

VENTS GROUND LEVEL RELEASES - OCT-DEC 2012
2.260 DAY DECAY, UNDEPLETED
CORRECTED USING STANDARD OPEN TERRAIN FACTORS

ANNUAL AVERAGE CHI/Q (SEC/METER CUBED) DISTANCE IN MILES FROM THE SITE

SECTOR	.250	.500	.750	1.000	1.500	2.000	2.500	3.000	3.500	4.000	4.500
S	4.703E-05	1.574E-05	8.407E-06	4.203E-06	1.686E-06	9.109E-07	5.761E-07	4.011E-07	2.980E-07	2.318E-07	1.867E-07
SSW	2.323E-05	7.319E-06	3.720E-06	1.828E-06	7.542E-07	4.153E-07	2.664E-07	1.875E-07	1.406E-07	1.102E-07	8.927E-08
SW	1.115E-05	3.573E-06	1.824E-06	8.967E-07	3.660E-07	2.001E-07	1.276E-07	8.945E-08	6.679E-08	5.218E-08	4.217E-08
WSW	1.006E-05	3.234E-06	1.686E-06	8.380E-07	3.403E-07	1.853E-07	1.178E-07	8.237E-08	6.138E-08	4.787E-08	3.863E-08
W	1.174E-05	4.035E-06	2.221E-06	1.124E-06	4.441E-07	2.373E-07	1.487E-07	1.028E-07	7.588E-08	5.871E-08	4.704E-08
WNW	2.081E-05	6.791E-06	3.524E-06	1.738E-06	6.972E-07	3.770E-07	2.385E-07	1.661E-07	1.234E-07	9.606E-08	7.737E-08
NW	4.166E-05	1.374E-05	7.263E-06	3.618E-06	1.460E-06	7.927E-07	5.030E-07	3.512E-07	2.614E-07	2.038E-07	1.643E-07
NNW	9.404E-05	2.873E-05	1.483E-05	7.392E-06	3.084E-06	1.710E-06	1.103E-06	7.793E-07	5.860E-07	4.606E-07	3.741E-07
N	1.577E-04	4.746E-05	2.421E-05	1.203E-05	5.073E-06	2.834E-06	1.837E-06	1.304E-06	9.836E-07	7.752E-07	6.313E-07
NNE	7.002E-05	2.131E-05	1.092E-05	5.426E-06	2.276E-06	1.267E-06	8.192E-07	5.803E-07	4.371E-07	3.440E-07	2.797E-07
NE	4.353E-05	1.316E-05	6.743E-06	3.355E-06	1.408E-06	7.842E-07	5.069E-07	3.590E-07	2.704E-07	2.128E-07	1.730E-07
ENE	3.360E-05	1.031E-05	5.211E-06	2.564E-06	1.070E-06	5.938E-07	3.829E-07	2.707E-07	2.036E-07	1.600E-07	1.300E-07
E	3.241E-05	9.869E-06	4.952E-06	2.433E-06	1.027E-06	5.738E-07	3.719E-07	2.640E-07	1.992E-07	1.570E-07	1.278E-07
ESE	3.469E-05	1.091E-05	5.788E-06	2.917E-06	1.201E-06	6.599E-07	4.225E-07	2.971E-07	2.224E-07	1.742E-07	1.410E-07
SE	6.366E-05	1.979E-05	1.016E-05	5.040E-06	2.090E-06	1.155E-06	7.421E-07	5.234E-07	3.929E-07	3.083E-07	2.501E-07
SSE	7.333E-05	2.286E-05	1.163E-05	5.732E-06	2.377E-06	1.314E-06	8.445E-07	5.958E-07	4.473E-07	3.511E-07	2.849E-07

ANNUAL AVERAGE CHI/Q (SEC/METER CUBED) DISTANCE IN MILES FROM THE SITE

SECTOR	5.000	7.500	10.000	15.000	20.000	25.000	30.000	35.000	40.000	45.000	50.000
S	1.544E-07	7.884E-08	5.063E-08	2.841E-08	1.878E-08	1.356E-08	1.036E-08	8.222E-09	6.713E-09	5.602E-09	4.755E-09
SSW	7.424E-08	3.862E-08	2.507E-08	1.423E-08	9.444E-09	6.824E-09	5.204E-09	4.119E-09	3.352E-09	2.785E-09	2.354E-09
SW	3.498E-08	1.803E-08	1.163E-08	6.546E-09	4.318E-09	3.106E-09	2.360E-09	1.862E-09	1.511E-09	1.253E-09	1.056E-09
WSW	3.201E-08	1.642E-08	1.056E-08	5.926E-09	3.904E-09	2.807E-09	2.133E-09	1.684E-09	1.367E-09	1.134E-09	9.573E-10
W	3.874E-08	1.944E-08	1.233E-08	6.799E-09	4.438E-09	3.174E-09	2.405E-09	1.895E-09	1.538E-09	1.276E-09	1.077E-09
WNW	6.401E-08	3.271E-08	2.100E-08	1.178E-08	7.777E-09	5.606E-09	4.272E-09	3.382E-09	2.754E-09	2.292E-09	1.940E-09
NW	1.361E-07	6.985E-08	4.499E-08	2.533E-08	1.677E-08	1.211E-08	9.252E-09	7.341E-09	5.990E-09	4.995E-09	4.236E-09
NNW	3.118E-07	1.635E-07	1.067E-07	6.101E-08	4.071E-08	2.954E-08	2.261E-08	1.796E-08	1.466E-08	1.222E-08	1.035E-08
N	5.272E-07	2.785E-07	1.827E-07	1.052E-07	7.048E-08	5.132E-08	3.939E-08	3.136E-08	2.566E-08	2.143E-08	1.819E-08
NNE	2.334E-07	1.228E-07	8.034E-08	4.605E-08	3.075E-08	2.233E-08	1.710E-08	1.358E-08	1.108E-08	9.238E-09	7.827E-09
NE	1.443E-07	7.588E-08	4.959E-08	2.836E-08	1.890E-08	1.370E-08	1.046E-08	8.294E-09	6.755E-09	5.617E-09	4.749E-09
ENE	1.084E-07	5.682E-08	3.707E-08	2.116E-08	1.409E-08	1.020E-08	7.793E-09	6.176E-09	5.029E-09	4.182E-09	3.536E-09
E	1.067E-07	5.633E-08	3.690E-08	2.117E-08	1.413E-08	1.024E-08	7.832E-09	6.211E-09	5.061E-09	4.210E-09	3.561E-09
ESE	1.172E-07	6.087E-08	3.951E-08	2.245E-08	1.493E-08	1.082E-08	8.282E-09	6.581E-09	5.377E-09	4.487E-09	3.807E-09
SE	2.082E-07	1.087E-07	7.082E-08	4.040E-08	2.693E-08	1.954E-08	1.496E-08	1.189E-08	9.716E-09	8.106E-09	6.878E-09
SSE	2.372E-07	1.239E-07	8.070E-08	4.601E-08	3.064E-08	2.220E-08	1.698E-08	1.347E-08	1.099E-08	9.153E-09	7.753E-09

CHI/Q (SEC/METER CUBED) FOR EACH SEGMENT

SEGMENT BOUNDARIES IN MILES FROM THE SITE

DIRECTION FROM SITE	.5-1	1-2	2-3	3-4	4-5	5-10	10-20	20-30	30-40	40-50
S	8.167E-06	1.901E-06	5.954E-07	3.022E-07	1.881E-07	8.309E-08	2.907E-08	1.367E-08	8.258E-09	5.618E-09
SSW	3.679E-06	8.423E-07	2.746E-07	1.424E-07	8.989E-08	4.052E-08	1.451E-08	6.875E-09	4.137E-09	2.793E-09
SW	1.800E-06	4.102E-07	1.317E-07	6.770E-08	4.247E-08	1.896E-08	6.686E-09	3.131E-09	1.870E-09	1.256E-09
WSW	1.653E-06	3.820E-07	1.216E-07	6.223E-08	3.892E-08	1.728E-08	6.058E-09	2.830E-09	1.691E-09	1.138E-09
W	2.137E-06	5.033E-07	1.540E-07	7.703E-08	4.742E-08	2.057E-08	6.979E-09	3.203E-09	1.905E-09	1.280E-09
WNW	3.456E-06	7.861E-07	2.465E-07	1.252E-07	7.796E-08	3.446E-08	1.205E-08	5.651E-09	3.397E-09	2.298E-09
NW	7.081E-06	1.643E-06	5.195E-07	2.651E-07	1.656E-07	7.353E-08	2.589E-08	1.221E-08	7.372E-09	5.009E-09
NNW	1.461E-05	3.431E-06	1.135E-06	5.935E-07	3.767E-07	1.712E-07	6.215E-08	2.975E-08	1.803E-08	1.225E-08
N	2.396E-05	5.624E-06	1.890E-06	9.957E-07	6.354E-07	2.912E-07	1.070E-07	5.166E-08	3.148E-08	2.148E-08
NNE	1.079E-05	2.528E-06	8.431E-07	4.425E-07	2.816E-07	1.285E-07	4.687E-08	2.248E-08	1.364E-08	9.263E-09
NE	6.664E-06	1.564E-06	5.217E-07	2.738E-07	1.742E-07	7.940E-08	2.888E-08	1.379E-08	8.328E-09	5.633E-09
ENE	5.168E-06	1.190E-06	3.943E-07	2.062E-07	1.309E-07	5.950E-08	2.156E-08	1.028E-08	6.201E-09	4.193E-09
E	4.925E-06	1.138E-06	3.826E-07	2.016E-07	1.286E-07	5.889E-08	2.153E-08	1.031E-08	6.236E-09	4.222E-09
ESE	5.650E-06	1.342E-06	4.357E-07	2.254E-07	1.420E-07	6.390E-08	2.290E-08	1.090E-08	6.608E-09	4.499E-09
SE	1.002E-05	2.330E-06	7.646E-07	3.979E-07	2.518E-07	1.140E-07	4.118E-08	1.968E-08	1.194E-08	8.128E-09
SSE	1.150E-05	2.650E-06	8.701E-07	4.531E-07	2.868E-07	1.299E-07	4.689E-08	2.236E-08	1.353E-08	9.179E-09

VENTS GROUND LEVEL RELEASES - OCT-DEC 2012
8.000 DAY DECAY, DEPLETED
CORRECTED USING STANDARD OPEN TERRAIN FACTORS

ANNUAL AVERAGE CHI/Q (SEC/METER CUBED) DISTANCE IN MILES FROM THE SITE

SECTOR	.250	.500	.750	1.000	1.500	2.000	2.500	3.000	3.500	4.000	4.500
S	4.455E-05	1.440E-05	7.513E-06	3.693E-06	1.440E-06	7.604E-07	4.714E-07	3.226E-07	2.360E-07	1.810E-07	1.439E-07
SSW	2.202E-05	6.704E-06	3.330E-06	1.610E-06	6.463E-07	3.482E-07	2.192E-07	1.518E-07	1.121E-07	8.676E-08	6.948E-08
SW	1.057E-05	3.272E-06	1.633E-06	7.894E-07	3.137E-07	1.677E-07	1.050E-07	7.240E-08	5.328E-08	4.109E-08	3.282E-08
WSW	9.539E-06	2.962E-06	1.508E-06	7.376E-07	2.914E-07	1.552E-07	9.684E-08	6.660E-08	4.890E-08	3.764E-08	3.001E-08
W	1.112E-05	3.693E-06	1.986E-06	9.882E-07	3.796E-07	1.982E-07	1.218E-07	8.274E-08	6.013E-08	4.587E-08	3.628E-08
WNW	1.972E-05	6.217E-06	3.151E-06	1.528E-06	5.965E-07	3.153E-07	1.957E-07	1.340E-07	9.811E-08	7.532E-08	5.992E-08
NW	3.947E-05	1.257E-05	6.494E-06	3.181E-06	1.249E-06	6.626E-07	4.123E-07	2.830E-07	2.075E-07	1.595E-07	1.270E-07
NNW	8.915E-05	2.632E-05	1.328E-05	6.511E-06	2.644E-06	1.434E-06	9.075E-07	6.311E-07	4.677E-07	3.628E-07	2.912E-07
N	1.495E-04	4.348E-05	2.167E-05	1.059E-05	4.350E-06	2.377E-06	1.512E-06	1.056E-06	7.853E-07	6.109E-07	4.916E-07
NNE	6.638E-05	1.953E-05	9.777E-06	4.780E-06	1.952E-06	1.063E-06	6.746E-07	4.701E-07	3.491E-07	2.712E-07	2.180E-07
NE	4.127E-05	1.206E-05	6.040E-06	2.957E-06	1.208E-06	6.584E-07	4.178E-07	2.912E-07	2.162E-07	1.680E-07	1.350E-07
ENE	3.185E-05	9.449E-06	4.666E-06	2.259E-06	9.179E-07	4.984E-07	3.155E-07	2.195E-07	1.628E-07	1.263E-07	1.014E-07
E	3.073E-05	9.044E-06	4.436E-06	2.144E-06	8.811E-07	4.818E-07	3.066E-07	2.142E-07	1.594E-07	1.240E-07	9.982E-08
ESE	3.288E-05	9.988E-06	5.177E-06	2.566E-06	1.028E-06	5.522E-07	3.468E-07	2.398E-07	1.768E-07	1.366E-07	1.093E-07
SE	6.034E-05	1.812E-05	9.091E-06	4.436E-06	1.790E-06	9.669E-07	6.098E-07	4.230E-07	3.129E-07	2.423E-07	1.942E-07
SSE	6.951E-05	2.094E-05	1.041E-05	5.046E-06	2.037E-06	1.101E-06	6.947E-07	4.821E-07	3.567E-07	2.763E-07	2.216E-07

ANNUAL AVERAGE CHI/Q (SEC/METER CUBED) DISTANCE IN MILES FROM THE SITE

SECTOR	5.000	7.500	10.000	15.000	20.000	25.000	30.000	35.000	40.000	45.000	50.000
S	1.176E-07	5.743E-08	3.555E-08	1.888E-08	1.198E-08	8.372E-09	6.220E-09	4.820E-09	3.853E-09	3.154E-09	2.630E-09
SSW	5.716E-08	2.860E-08	1.799E-08	9.766E-09	6.283E-09	4.434E-09	3.318E-09	2.585E-09	2.075E-09	1.704E-09	1.425E-09
SW	2.693E-08	1.335E-08	8.345E-09	4.490E-09	2.871E-09	2.017E-09	1.504E-09	1.168E-09	9.356E-10	7.666E-10	6.397E-10
WSW	2.459E-08	1.212E-08	7.544E-09	4.036E-09	2.571E-09	1.802E-09	1.341E-09	1.040E-09	8.318E-10	6.809E-10	5.677E-10
W	2.952E-08	1.417E-08	8.656E-09	4.513E-09	2.826E-09	1.955E-09	1.440E-09	1.108E-09	8.804E-10	7.168E-10	5.949E-10
WNW	4.901E-08	2.402E-08	1.491E-08	7.954E-09	5.067E-09	3.551E-09	2.644E-09	2.052E-09	1.642E-09	1.345E-09	1.122E-09
NW	1.040E-07	5.113E-08	3.179E-08	1.698E-08	1.082E-08	7.582E-09	5.645E-09	4.382E-09	3.507E-09	2.873E-09	2.398E-09
NNW	2.401E-07	1.210E-07	7.651E-08	4.178E-08	2.699E-08	1.910E-08	1.433E-08	1.119E-08	8.995E-09	7.398E-09	6.193E-09
N	4.061E-07	2.063E-07	1.311E-07	7.205E-08	4.673E-08	3.318E-08	2.495E-08	1.952E-08	1.572E-08	1.295E-08	1.086E-08
NNE	1.799E-07	9.105E-08	5.771E-08	3.162E-08	2.046E-08	1.450E-08	1.088E-08	8.505E-09	6.843E-09	5.630E-09	4.715E-09
NE	1.114E-07	5.640E-08	3.575E-08	1.958E-08	1.266E-08	8.967E-09	6.729E-09	5.255E-09	4.226E-09	3.475E-09	2.909E-09
ENE	8.364E-08	4.222E-08	2.672E-08	1.461E-08	9.439E-09	6.683E-09	5.013E-09	3.914E-09	3.147E-09	2.588E-09	2.166E-09
E	8.247E-08	4.192E-08	2.665E-08	1.465E-08	9.494E-09	6.736E-09	5.061E-09	3.956E-09	3.184E-09	2.620E-09	2.194E-09
ESE	8.977E-08	4.470E-08	2.803E-08	1.514E-08	9.705E-09	6.833E-09	5.105E-09	3.974E-09	3.188E-09	2.617E-09	2.187E-09
SE	1.599E-07	8.018E-08	5.053E-08	2.748E-08	1.770E-08	1.250E-08	9.365E-09	7.306E-09	5.871E-09	4.826E-09	4.038E-09
SSE	1.825E-07	9.165E-08	5.782E-08	3.149E-08	2.030E-08	1.435E-08	1.075E-08	8.391E-09	6.743E-09	5.542E-09	4.638E-09

CHI/Q (SEC/METER CUBED) FOR EACH SEGMENT
SEGMENT BOUNDARIES IN MILES FROM THE SITE

DIRECTION FROM SITE	.5-1	1-2	2-3	3-4	4-5	5-10	10-20	20-30	30-40	40-50
S	7.345E-06	1.639E-06	4.890E-07	2.398E-07	1.451E-07	6.108E-08	1.952E-08	8.474E-09	4.852E-09	3.167E-09
SSW	3.315E-06	7.279E-07	2.266E-07	1.138E-07	7.004E-08	3.023E-08	1.005E-08	4.480E-09	2.600E-09	1.711E-09
SW	1.622E-06	3.545E-07	1.087E-07	5.410E-08	3.309E-08	1.414E-08	4.627E-09	2.039E-09	1.176E-09	7.697E-10
WSW	1.489E-06	3.301E-07	1.003E-07	4.967E-08	3.026E-08	1.286E-08	4.165E-09	1.822E-09	1.047E-09	6.837E-10
W	1.922E-06	4.342E-07	1.266E-07	6.116E-08	3.662E-08	1.513E-08	4.684E-09	1.981E-09	1.116E-09	7.201E-10
WNW	3.111E-06	6.786E-07	2.029E-07	9.969E-08	6.044E-08	2.553E-08	8.216E-09	3.592E-09	2.065E-09	1.350E-09
NW	6.372E-06	1.418E-06	4.273E-07	2.108E-07	1.281E-07	5.428E-08	1.753E-08	7.670E-09	4.409E-09	2.885E-09
NNW	1.317E-05	2.965E-06	9.374E-07	4.744E-07	2.935E-07	1.277E-07	4.292E-08	1.929E-08	1.125E-08	7.425E-09
N	2.159E-05	4.861E-06	1.560E-06	7.962E-07	4.953E-07	2.173E-07	7.392E-08	3.350E-08	1.962E-08	1.300E-08
NNE	9.723E-06	2.185E-06	6.964E-07	3.540E-07	2.196E-07	9.597E-08	3.246E-08	1.464E-08	8.551E-09	5.651E-09
NE	6.008E-06	1.353E-06	4.313E-07	2.193E-07	1.361E-07	5.945E-08	2.010E-08	9.056E-09	5.284E-09	3.488E-09
ENE	4.659E-06	1.030E-06	3.259E-07	1.651E-07	1.022E-07	4.454E-08	1.500E-08	6.750E-09	3.936E-09	2.597E-09
E	4.441E-06	9.843E-07	3.164E-07	1.616E-07	1.006E-07	4.414E-08	1.502E-08	6.801E-09	3.978E-09	2.630E-09
ESE	5.086E-06	1.158E-06	3.588E-07	1.795E-07	1.101E-07	4.731E-08	1.559E-08	6.907E-09	3.997E-09	2.627E-09
SE	9.028E-06	2.012E-06	6.303E-07	3.174E-07	1.957E-07	8.470E-08	2.825E-08	1.263E-08	7.347E-09	4.844E-09
SSE	1.037E-05	2.290E-06	7.180E-07	3.619E-07	2.233E-07	9.680E-08	3.236E-08	1.450E-08	8.438E-09	5.563E-09

VENTS GROUND LEVEL RELEASES - OCT-DEC 2012
CORRECTED USING STANDARD OPEN TERRAIN FACTORS

********** RELATIVE DEPOSITION PER UNIT AREA (M**-2) AT FIXED POINTS BY DOWNWIND SECTORS **********

DIRECTION FROM SITE	.25	.50	.75	1.00	1.50	2.00	2.50	3.00	3.50	4.00	4.50
	DISTANCES IN MILES										
S	2.364E-07	7.994E-08	4.104E-08	1.951E-08	7.009E-09	3.476E-09	2.047E-09	1.340E-09	9.430E-10	6.988E-10	5.385E-10
SSW	7.664E-08	2.592E-08	1.331E-08	6.326E-09	2.272E-09	1.127E-09	6.636E-10	4.345E-10	3.057E-10	2.266E-10	1.746E-10
SW	3.097E-08	1.047E-08	5.378E-09	2.557E-09	9.183E-10	4.554E-10	2.682E-10	1.756E-10	1.236E-10	9.156E-11	7.056E-11
WSW	2.775E-08	9.385E-09	4.819E-09	2.291E-09	8.229E-10	4.081E-10	2.403E-10	1.573E-10	1.107E-10	8.205E-11	6.323E-11
W	3.917E-08	1.325E-08	6.801E-09	3.233E-09	1.161E-09	5.760E-10	3.391E-10	2.221E-10	1.563E-10	1.158E-10	8.924E-11
WNW	8.266E-08	2.795E-08	1.435E-08	6.823E-09	2.451E-09	1.215E-09	7.157E-10	4.686E-10	3.297E-10	2.444E-10	1.883E-10
NW	1.578E-07	5.336E-08	2.740E-08	1.303E-08	4.679E-09	2.320E-09	1.366E-09	8.946E-10	6.295E-10	4.665E-10	3.595E-10
NNW	2.449E-07	8.283E-08	4.253E-08	2.022E-08	7.263E-09	3.602E-09	2.121E-09	1.389E-09	9.771E-10	7.241E-10	5.580E-10
N	3.868E-07	1.308E-07	6.716E-08	3.193E-08	1.147E-08	5.687E-09	3.349E-09	2.193E-09	1.543E-09	1.143E-09	8.812E-10
NNE	1.683E-07	5.691E-08	2.922E-08	1.389E-08	4.990E-09	2.474E-09	1.457E-09	9.540E-10	6.713E-10	4.975E-10	3.834E-10
NE	7.996E-08	2.704E-08	1.388E-08	6.600E-09	2.371E-09	1.176E-09	6.923E-10	4.533E-10	3.190E-10	2.364E-10	1.822E-10
ENE	8.048E-08	2.721E-08	1.397E-08	6.643E-09	2.386E-09	1.183E-09	6.968E-10	4.562E-10	3.210E-10	2.379E-10	1.833E-10
E	7.210E-08	2.438E-08	1.252E-08	5.951E-09	2.138E-09	1.060E-09	6.242E-10	4.087E-10	2.876E-10	2.131E-10	1.642E-10
ESE	1.252E-07	4.234E-08	2.174E-08	1.034E-08	3.713E-09	1.841E-09	1.084E-09	7.099E-10	4.995E-10	3.702E-10	2.853E-10
SE	2.537E-07	8.577E-08	4.404E-08	2.094E-08	7.521E-09	3.730E-09	2.196E-09	1.438E-09	1.012E-09	7.499E-10	5.779E-10
SSE	2.532E-07	8.563E-08	4.397E-08	2.090E-08	7.508E-09	3.723E-09	2.192E-09	1.436E-09	1.010E-09	7.486E-10	5.769E-10

DIRECTION FROM SITE	5.00	7.50	10.00	15.00	20.00	25.00	30.00	35.00	40.00	45.00	50.00
	DISTANCES IN MILES										
S	4.278E-10	1.901E-10	1.151E-10	5.819E-11	3.522E-11	2.362E-11	1.692E-11	1.271E-11	9.879E-12	7.892E-12	6.441E-12
SSW	1.387E-10	6.162E-11	3.733E-11	1.887E-11	1.142E-11	7.656E-12	5.486E-12	4.119E-12	3.203E-12	2.559E-12	2.088E-12
SW	5.606E-11	2.490E-11	1.508E-11	7.625E-12	4.615E-12	3.094E-12	2.217E-12	1.665E-12	1.294E-12	1.034E-12	8.440E-13
WSW	5.023E-11	2.231E-11	1.352E-11	6.832E-12	4.135E-12	2.773E-12	1.987E-12	1.492E-12	1.160E-12	9.265E-13	7.562E-13
W	7.089E-11	3.149E-11	1.908E-11	9.643E-12	5.836E-12	3.913E-12	2.804E-12	2.105E-12	1.637E-12	1.308E-12	1.067E-12
WNW	1.496E-10	6.646E-11	4.026E-11	2.035E-11	1.232E-11	8.258E-12	5.917E-12	4.443E-12	3.455E-12	2.760E-12	2.252E-12
NW	2.856E-10	1.269E-10	7.686E-11	3.885E-11	2.351E-11	1.576E-11	1.130E-11	8.482E-12	6.595E-12	5.268E-12	4.300E-12
NNW	4.433E-10	1.969E-10	1.193E-10	6.030E-11	3.650E-11	2.447E-11	1.753E-11	1.317E-11	1.024E-11	8.177E-12	6.674E-12
N	7.000E-10	3.110E-10	1.884E-10	9.522E-11	5.763E-11	3.864E-11	2.769E-11	2.079E-11	1.616E-11	1.291E-11	1.054E-11
NNE	3.046E-10	1.353E-10	8.196E-11	4.143E-11	2.507E-11	1.681E-11	1.205E-11	9.045E-12	7.033E-12	5.618E-12	4.586E-12
NE	1.447E-10	6.429E-11	3.894E-11	1.968E-11	1.191E-11	7.988E-12	5.724E-12	4.298E-12	3.342E-12	2.669E-12	2.179E-12
ENE	1.457E-10	6.471E-11	3.920E-11	1.981E-11	1.199E-11	8.040E-12	5.761E-12	4.326E-12	3.363E-12	2.687E-12	2.193E-12
E	1.305E-10	5.797E-11	3.511E-11	1.775E-11	1.074E-11	7.202E-12	5.161E-12	3.875E-12	3.013E-12	2.407E-12	1.965E-12
ESE	2.266E-10	1.007E-10	6.099E-11	3.082E-11	1.866E-11	1.251E-11	8.963E-12	6.730E-12	5.233E-12	4.180E-12	3.412E-12
SE	4.591E-10	2.039E-10	1.235E-10	6.244E-11	3.779E-11	2.534E-11	1.816E-11	1.363E-11	1.060E-11	8.468E-12	6.912E-12
SSE	4.583E-10	2.036E-10	1.233E-10	6.234E-11	3.773E-11	2.530E-11	1.813E-11	1.361E-11	1.058E-11	8.454E-12	6.900E-12

********** RELATIVE DEPOSITION PER UNIT AREA (M**-2) BY DOWNWIND SECTORS **********

DIRECTION FROM SITE	.5-1	1-2	2-3	3-4	4-5	5-10	10-20	20-30	30-40	40-50
	SEGMENT BOUNDARIES IN MILES									
S	4.012E-08	8.217E-09	2.145E-09	9.635E-10	5.450E-10	2.096E-10	6.064E-11	2.403E-11	1.283E-11	7.943E-12
SSW	1.301E-08	2.664E-09	6.955E-10	3.124E-10	1.767E-10	6.795E-11	1.966E-11	7.792E-12	4.161E-12	2.575E-12
SW	5.256E-09	1.077E-09	2.811E-10	1.262E-10	7.141E-11	2.746E-11	7.945E-12	3.149E-12	1.682E-12	1.041E-12
WSW	4.710E-09	9.647E-10	2.519E-10	1.131E-10	6.399E-11	2.461E-11	7.119E-12	2.822E-12	1.507E-12	9.326E-13
W	6.648E-09	1.362E-09	3.555E-10	1.596E-10	9.031E-11	3.473E-11	1.005E-11	3.982E-12	2.127E-12	1.316E-12
WNW	1.403E-08	2.873E-09	7.501E-10	3.369E-10	1.906E-10	7.329E-11	2.120E-11	8.404E-12	4.488E-12	2.778E-12
NW	2.678E-08	5.486E-09	1.432E-09	6.432E-10	3.639E-10	1.399E-10	4.048E-11	1.604E-11	8.567E-12	5.303E-12
NNW	4.157E-08	8.515E-09	2.223E-09	9.983E-10	5.648E-10	2.172E-10	6.283E-11	2.490E-11	1.330E-11	8.231E-12
N	6.564E-08	1.345E-08	3.510E-09	1.576E-09	8.918E-10	3.430E-10	9.921E-11	3.932E-11	2.100E-11	1.300E-11
NNE	2.856E-08	5.850E-09	1.527E-09	6.859E-10	3.880E-10	1.492E-10	4.317E-11	1.711E-11	9.136E-12	5.655E-12
NE	1.357E-08	2.779E-09	7.256E-10	3.259E-10	1.844E-10	7.090E-11	2.051E-11	8.129E-12	4.341E-12	2.687E-12
ENE	1.366E-08	2.798E-09	7.303E-10	3.280E-10	1.856E-10	7.136E-11	2.064E-11	8.182E-12	4.369E-12	2.704E-12
E	1.224E-08	2.506E-09	6.543E-10	2.938E-10	1.662E-10	6.392E-11	1.849E-11	7.330E-12	3.914E-12	2.423E-12
ESE	2.125E-08	4.353E-09	1.136E-09	5.103E-10	2.887E-10	1.110E-10	3.212E-11	1.273E-11	6.798E-12	4.208E-12
SE	4.305E-08	8.817E-09	2.302E-09	1.034E-09	5.848E-10	2.249E-10	6.506E-11	2.579E-11	1.377E-11	8.524E-12
SSE	4.297E-08	8.803E-09	2.298E-09	1.032E-09	5.839E-10	2.245E-10	6.495E-11	2.574E-11	1.375E-11	8.509E-12

VENTS GROUND LEVEL RELEASES - OCT-DEC 2012
CORRECTED USING STANDARD OPEN TERRAIN FACTORS
SPECIFIC POINTS OF INTEREST

RELEASE ID	TYPE OF LOCATION	DIRECTION FROM SITE	DIST. (MI)	X/Q (SEC/M3) NO DECAY UNDEPLETED	X/Q (SEC/M3) 2.26 DAY DECAY UNDEPLETED	X/Q (SEC/M3) 8.0 DAY DECAY DEPLETED	D/Q (PER SQ.METER)
A	Site Boundary	S	.80	7.3E-06	7.2E-06	6.4E-06	3.5E-08
A	Site Boundary	SSW	.82	3.0E-06	2.9E-06	2.6E-06	1.0E-08
A	Site Boundary	SW	.97	9.6E-07	9.5E-07	8.4E-07	2.7E-09
A	Site Boundary	WSW	.93	1.0E-06	1.0E-06	8.9E-07	2.8E-09
A	Site Boundary	W	.91	1.4E-06	1.4E-06	1.2E-06	4.1E-09
A	Site Boundary	WNW	.94	2.0E-06	2.0E-06	1.8E-06	8.1E-09
A	Site Boundary	NW	.81	6.0E-06	6.0E-06	5.3E-06	2.2E-08
A	Site Boundary	NNW	.69	1.7E-05	1.7E-05	1.5E-05	4.9E-08
A	Site Boundary	N	.67	2.9E-05	2.9E-05	2.6E-05	8.0E-08
A	Site Boundary	NNE	.60	1.6E-05	1.6E-05	1.4E-05	4.2E-08
A	Site Boundary	NE	.62	9.1E-06	9.0E-06	8.2E-06	1.9E-08
A	Site Boundary	ENE	.59	7.9E-06	7.9E-06	7.1E-06	2.1E-08
A	Site Boundary	E	.53	9.1E-06	9.1E-06	8.3E-06	2.3E-08
A	Site Boundary	ESE	.54	9.7E-06	9.7E-06	8.8E-06	3.8E-08
A	Site Boundary	SE	.65	1.3E-05	1.3E-05	1.2E-05	5.6E-08
A	Site Boundary	SSE	.81	9.6E-06	9.6E-06	8.5E-06	3.6E-08
A	Nearest Res	SSW	3.00	1.9E-07	1.9E-07	1.5E-07	4.3E-10
A	Nearest Res	SW	1.30	5.0E-07	5.0E-07	4.3E-07	1.3E-09
A	Nearest Res	WSW	1.90	2.1E-07	2.1E-07	1.7E-07	4.6E-10
A	Nearest Res	W	2.90	1.1E-07	1.1E-07	8.9E-08	2.4E-10
A	Nearest Res	WNW	1.70	5.4E-07	5.3E-07	4.5E-07	1.8E-09
A	Nearest Res	NW	.90	4.7E-06	4.7E-06	4.1E-06	1.7E-08
A	Nearest Res	NNW	1.90	1.9E-06	1.9E-06	1.6E-06	4.1E-09
A	Nearest Res	N	3.00	1.3E-06	1.3E-06	1.1E-06	2.2E-09
A	Nearest Res	NNE	1.90	1.4E-06	1.4E-06	1.2E-06	2.8E-09
A	Nearest Res	NE	3.00	3.7E-07	3.6E-07	2.9E-07	4.5E-10
A	Nearest Res	ENE	1.70	8.4E-07	8.3E-07	7.0E-07	1.8E-09
A	Nearest Res	E	2.20	4.9E-07	4.8E-07	4.0E-07	8.4E-10
A	Nearest Res	ESE	2.30	5.1E-07	5.0E-07	4.1E-07	1.3E-09
A	Nearest Res	SE	3.00	5.4E-07	5.2E-07	4.2E-07	1.4E-09
A	Nearest Cow	NNW	3.50	6.0E-07	5.9E-07	4.7E-07	9.8E-10
A	Nearest Garde	SSW	3.00	1.9E-07	1.9E-07	1.5E-07	4.3E-10
A	Nearest Garde	SW	1.30	5.0E-07	5.0E-07	4.3E-07	1.3E-09
A	Nearest Garde	WSW	1.90	2.1E-07	2.1E-07	1.7E-07	4.6E-10
A	Nearest Garde	W	2.90	1.1E-07	1.1E-07	8.9E-08	2.4E-10
A	Nearest Garde	WNW	2.40	2.6E-07	2.6E-07	2.1E-07	7.9E-10
A	Nearest Garde	NW	2.90	3.8E-07	3.8E-07	3.0E-07	9.7E-10
A	Nearest Garde	NNW	2.80	9.1E-07	8.9E-07	7.2E-07	1.6E-09
A	Nearest Garde	ENE	1.70	8.4E-07	8.3E-07	7.0E-07	1.8E-09
A	Nearest Garde	E	2.20	4.9E-07	4.8E-07	4.0E-07	8.4E-10
A	Nearest Garde	ESE	2.30	5.1E-07	5.0E-07	4.1E-07	1.3E-09

Atmospheric Diffusion Estimates

Ground Level Releases

July-December 2012

VENTS GROUND LEVEL RELEASES - JUL-DEC 2012
NO DECAY, UNDEPLETED
CORRECTED USING STANDARD OPEN TERRAIN FACTORS

ANNUAL AVERAGE CHI/Q (SEC/METER CUBED) DISTANCE IN MILES FROM THE SITE

SECTOR	.250	.500	.750	1.000	1.500	2.000	2.500	3.000	3.500	4.000	4.500
S	6.629E-05	2.143E-05	1.129E-05	5.633E-06	2.295E-06	1.256E-06	8.022E-07	5.636E-07	4.221E-07	3.308E-07	2.682E-07
SSW	2.296E-05	7.341E-06	3.791E-06	1.873E-06	7.628E-07	4.172E-07	2.665E-07	1.873E-07	1.403E-07	1.100E-07	8.918E-08
SW	1.577E-05	5.226E-06	2.744E-06	1.359E-06	5.415E-07	2.917E-07	1.842E-07	1.282E-07	9.528E-08	7.419E-08	5.982E-08
WSW	1.120E-05	3.634E-06	1.893E-06	9.356E-07	3.729E-07	2.010E-07	1.270E-07	8.842E-08	6.574E-08	5.121E-08	4.130E-08
W	1.111E-05	3.693E-06	1.988E-06	9.992E-07	3.993E-07	2.154E-07	1.361E-07	9.478E-08	7.045E-08	5.486E-08	4.423E-08
WNW	1.439E-05	4.738E-06	2.466E-06	1.213E-06	4.805E-07	2.579E-07	1.625E-07	1.129E-07	8.379E-08	6.517E-08	5.250E-08
NW	3.697E-05	1.200E-05	6.277E-06	3.115E-06	1.259E-06	6.852E-07	4.361E-07	3.055E-07	2.282E-07	1.785E-07	1.445E-07
NNW	9.861E-05	2.998E-05	1.526E-05	7.562E-06	3.185E-06	1.782E-06	1.157E-06	8.237E-07	6.235E-07	4.932E-07	4.031E-07
N	1.591E-04	4.836E-05	2.493E-05	1.245E-05	5.243E-06	2.931E-06	1.903E-06	1.354E-06	1.025E-06	8.101E-07	6.619E-07
NNE	7.376E-05	2.223E-05	1.145E-05	5.724E-06	2.407E-06	1.345E-06	8.724E-07	6.204E-07	4.693E-07	3.709E-07	3.030E-07
NE	3.870E-05	1.168E-05	6.017E-06	3.009E-06	1.269E-06	7.100E-07	4.611E-07	3.282E-07	2.484E-07	1.964E-07	1.605E-07
ENE	2.846E-05	8.631E-06	4.387E-06	2.175E-06	9.172E-07	5.133E-07	3.335E-07	2.374E-07	1.797E-07	1.422E-07	1.162E-07
E	2.608E-05	7.877E-06	4.010E-06	1.993E-06	8.454E-07	4.749E-07	3.093E-07	2.207E-07	1.673E-07	1.325E-07	1.084E-07
ESE	3.473E-05	1.054E-05	5.449E-06	2.728E-06	1.148E-06	6.416E-07	4.163E-07	2.960E-07	2.239E-07	1.770E-07	1.445E-07
SE	6.310E-05	1.926E-05	9.922E-06	4.955E-06	2.083E-06	1.162E-06	7.536E-07	5.356E-07	4.049E-07	3.199E-07	2.611E-07
SSE	7.279E-05	2.234E-05	1.143E-05	5.676E-06	2.379E-06	1.326E-06	8.588E-07	6.100E-07	4.609E-07	3.640E-07	2.971E-07

ANNUAL AVERAGE CHI/Q (SEC/METER CUBED) DISTANCE IN MILES FROM THE SITE

SECTOR	5.000	7.500	10.000	15.000	20.000	25.000	30.000	35.000	40.000	45.000	50.000
S	2.233E-07	1.174E-07	7.737E-08	4.544E-08	3.130E-08	2.348E-08	1.860E-08	1.528E-08	1.290E-08	1.111E-08	9.731E-09
SSW	7.427E-08	3.911E-08	2.580E-08	1.520E-08	1.050E-08	7.904E-09	6.274E-09	5.166E-09	4.369E-09	3.770E-09	3.306E-09
SW	4.956E-08	2.561E-08	1.667E-08	9.637E-09	6.575E-09	4.900E-09	3.859E-09	3.156E-09	2.654E-09	2.279E-09	1.990E-09
WSW	3.424E-08	1.771E-08	1.154E-08	6.695E-09	4.588E-09	3.430E-09	2.708E-09	2.221E-09	1.871E-09	1.610E-09	1.407E-09
W	3.664E-08	1.890E-08	1.228E-08	7.077E-09	4.809E-09	3.571E-09	2.804E-09	2.287E-09	1.919E-09	1.644E-09	1.433E-09
WNW	4.349E-08	2.247E-08	1.463E-08	8.467E-09	5.787E-09	4.318E-09	3.405E-09	2.788E-09	2.347E-09	2.017E-09	1.762E-09
NW	1.202E-07	6.292E-08	4.133E-08	2.419E-08	1.664E-08	1.247E-08	9.868E-09	8.103E-09	6.837E-09	5.888E-09	5.154E-09
NNW	3.380E-07	1.824E-07	1.223E-07	7.350E-08	5.142E-08	3.904E-08	3.121E-08	2.585E-08	2.197E-08	1.904E-08	1.675E-08
N	5.547E-07	2.989E-07	2.001E-07	1.201E-07	8.386E-08	6.359E-08	5.078E-08	4.201E-08	3.567E-08	3.089E-08	2.716E-08
NNE	2.539E-07	1.367E-07	9.155E-08	5.493E-08	3.837E-08	2.910E-08	2.323E-08	1.922E-08	1.632E-08	1.414E-08	1.243E-08
NE	1.345E-07	7.250E-08	4.855E-08	2.914E-08	2.036E-08	1.544E-08	1.233E-08	1.020E-08	8.662E-09	7.501E-09	6.597E-09
ENE	9.743E-08	5.258E-08	3.525E-08	2.119E-08	1.482E-08	1.125E-08	8.993E-09	7.447E-09	6.327E-09	5.483E-09	4.825E-09
E	9.100E-08	4.925E-08	3.308E-08	1.993E-08	1.395E-08	1.060E-08	8.475E-09	7.021E-09	5.968E-09	5.173E-09	4.553E-09
ESE	1.211E-07	6.513E-08	4.357E-08	2.610E-08	1.821E-08	1.379E-08	1.101E-08	9.102E-09	7.724E-09	6.686E-09	5.878E-09
SE	2.187E-07	1.175E-07	7.852E-08	4.699E-08	3.276E-08	2.480E-08	1.979E-08	1.636E-08	1.388E-08	1.201E-08	1.056E-08
SSE	2.488E-07	1.337E-07	8.934E-08	5.349E-08	3.732E-08	2.827E-08	2.256E-08	1.866E-08	1.584E-08	1.371E-08	1.206E-08

CHI/Q (SEC/METER CUBED) FOR EACH SEGMENT
SEGMENT BOUNDARIES IN MILES FROM THE SITE

DIRECTION FROM SITE	.5-1	1-2	2-3	3-4	4-5	5-10	10-20	20-30	30-40	40-50
S	1.103E-05	2.575E-06	8.277E-07	4.277E-07	2.701E-07	1.232E-07	4.625E-08	2.361E-08	1.532E-08	1.113E-08
SSW	3.728E-06	8.560E-07	2.750E-07	1.421E-07	8.981E-08	4.101E-08	1.547E-08	7.945E-09	5.179E-09	3.776E-09
SW	2.680E-06	6.122E-07	1.905E-07	9.666E-08	6.028E-08	2.696E-08	9.839E-09	4.930E-09	3.166E-09	2.283E-09
WSW	1.854E-06	4.215E-07	1.313E-07	6.668E-08	4.162E-08	1.864E-08	6.836E-09	3.450E-09	2.227E-09	1.612E-09
W	1.927E-06	4.508E-07	1.407E-07	7.146E-08	4.457E-08	1.990E-08	7.226E-09	3.594E-09	2.295E-09	1.647E-09
WNW	2.414E-06	5.444E-07	1.681E-07	8.502E-08	5.292E-08	2.365E-08	8.645E-09	4.344E-09	2.796E-09	2.020E-09
NW	6.143E-06	1.416E-06	4.503E-07	2.314E-07	1.456E-07	6.605E-08	2.464E-08	1.254E-08	8.125E-09	5.897E-09
NNW	1.511E-05	3.534E-06	1.190E-06	6.311E-07	4.057E-07	1.902E-07	7.452E-08	3.921E-08	2.590E-08	1.906E-08
N	2.459E-05	5.816E-06	1.958E-06	1.037E-06	6.661E-07	3.118E-07	1.218E-07	6.387E-08	4.210E-08	3.092E-08
NNE	1.130E-05	2.672E-06	8.975E-07	4.750E-07	3.049E-07	1.427E-07	5.571E-08	2.922E-08	1.927E-08	1.415E-08
NE	5.939E-06	1.407E-06	4.743E-07	2.514E-07	1.615E-07	7.564E-08	2.955E-08	1.550E-08	1.022E-08	7.510E-09
ENE	4.347E-06	1.017E-06	3.430E-07	1.819E-07	1.169E-07	5.485E-08	2.149E-08	1.130E-08	7.462E-09	5.489E-09
E	3.973E-06	9.357E-07	3.180E-07	1.693E-07	1.091E-07	5.134E-08	2.019E-08	1.064E-08	7.035E-09	5.179E-09
ESE	5.371E-06	1.274E-06	4.283E-07	2.266E-07	1.455E-07	6.798E-08	2.647E-08	1.386E-08	9.121E-09	6.694E-09
SE	9.789E-06	2.312E-06	7.754E-07	4.099E-07	2.628E-07	1.227E-07	4.767E-08	2.492E-08	1.639E-08	1.203E-08
SSE	1.130E-05	2.644E-06	8.838E-07	4.666E-07	2.991E-07	1.396E-07	5.427E-08	2.840E-08	1.870E-08	1.373E-08

VENTS GROUND LEVEL RELEASES - JUL-DEC 2012
2.260 DAY DECAY, UNDEPLETED
CORRECTED USING STANDARD OPEN TERRAIN FACTORS

ANNUAL AVERAGE CHI/Q (SEC/METER CUBED) DISTANCE IN MILES FROM THE SITE

SECTOR	.250	.500	.750	1.000	1.500	2.000	2.500	3.000	3.500	4.000	4.500
S	6.620E-05	2.137E-05	1.124E-05	5.604E-06	2.277E-06	1.242E-06	7.911E-07	5.542E-07	4.137E-07	3.233E-07	2.614E-07
SSW	2.293E-05	7.320E-06	3.776E-06	1.863E-06	7.563E-07	4.124E-07	2.626E-07	1.839E-07	1.373E-07	1.073E-07	8.675E-08
SW	1.575E-05	5.211E-06	2.733E-06	1.352E-06	5.369E-07	2.883E-07	1.815E-07	1.260E-07	9.330E-08	7.242E-08	5.821E-08
WSW	1.118E-05	3.623E-06	1.884E-06	9.301E-07	3.696E-07	1.985E-07	1.250E-07	8.678E-08	6.431E-08	4.993E-08	4.014E-08
W	1.110E-05	3.682E-06	1.979E-06	9.934E-07	3.958E-07	2.128E-07	1.341E-07	9.309E-08	6.897E-08	5.354E-08	4.303E-08
WNW	1.437E-05	4.727E-06	2.457E-06	1.207E-06	4.769E-07	2.553E-07	1.604E-07	1.111E-07	8.222E-08	6.377E-08	5.122E-08
NW	3.691E-05	1.196E-05	6.252E-06	3.098E-06	1.249E-06	6.775E-07	4.299E-07	3.002E-07	2.236E-07	1.744E-07	1.407E-07
NNW	9.842E-05	2.987E-05	1.518E-05	7.507E-06	3.150E-06	1.755E-06	1.135E-06	8.050E-07	6.070E-07	4.782E-07	3.893E-07
N	1.588E-04	4.819E-05	2.480E-05	1.236E-05	5.188E-06	2.890E-06	1.870E-06	1.325E-06	9.992E-07	7.871E-07	6.407E-07
NNE	7.363E-05	2.215E-05	1.139E-05	5.684E-06	2.382E-06	1.325E-06	8.568E-07	6.070E-07	4.574E-07	3.602E-07	2.931E-07
NE	3.862E-05	1.163E-05	5.983E-06	2.986E-06	1.254E-06	6.990E-07	4.522E-07	3.205E-07	2.416E-07	1.903E-07	1.549E-07
ENE	2.840E-05	8.597E-06	4.362E-06	2.159E-06	9.066E-07	5.053E-07	3.270E-07	2.318E-07	1.748E-07	1.377E-07	1.121E-07
E	2.603E-05	7.846E-06	3.987E-06	1.977E-06	8.356E-07	4.675E-07	3.033E-07	2.155E-07	1.627E-07	1.283E-07	1.046E-07
ESE	3.466E-05	1.050E-05	5.420E-06	2.709E-06	1.136E-06	6.322E-07	4.086E-07	2.895E-07	2.181E-07	1.717E-07	1.397E-07
SE	6.299E-05	1.919E-05	9.871E-06	4.921E-06	2.061E-06	1.146E-06	7.403E-07	5.242E-07	3.948E-07	3.107E-07	2.527E-07
SSE	7.265E-05	2.226E-05	1.138E-05	5.638E-06	2.354E-06	1.307E-06	8.436E-07	5.970E-07	4.494E-07	3.536E-07	2.875E-07

ANNUAL AVERAGE CHI/Q (SEC/METER CUBED) DISTANCE IN MILES FROM THE SITE

SECTOR	5.000	7.500	10.000	15.000	20.000	25.000	30.000	35.000	40.000	45.000	50.000
S	2.170E-07	1.124E-07	7.291E-08	4.154E-08	2.777E-08	2.024E-08	1.558E-08	1.244E-08	1.022E-08	8.570E-09	7.307E-09
SSW	7.202E-08	3.731E-08	2.421E-08	1.381E-08	9.244E-09	6.742E-09	5.191E-09	4.148E-09	3.407E-09	2.857E-09	2.435E-09
SW	4.808E-08	2.445E-08	1.567E-08	8.777E-09	5.806E-09	4.197E-09	3.208E-09	2.548E-09	2.081E-09	1.737E-09	1.475E-09
WSW	3.316E-08	1.687E-08	1.081E-08	6.069E-09	4.026E-09	2.916E-09	2.232E-09	1.775E-09	1.452E-09	1.212E-09	1.030E-09
W	3.554E-08	1.805E-08	1.155E-08	6.452E-09	4.252E-09	3.064E-09	2.335E-09	1.850E-09	1.508E-09	1.256E-09	1.064E-09
WNW	4.230E-08	2.154E-08	1.382E-08	7.766E-09	5.157E-09	3.741E-09	2.869E-09	2.286E-09	1.873E-09	1.568E-09	1.335E-09
NW	1.166E-07	6.012E-08	3.888E-08	2.206E-08	1.471E-08	1.070E-08	8.220E-09	6.557E-09	5.378E-09	4.504E-09	3.836E-09
NNW	3.251E-07	1.720E-07	1.131E-07	6.541E-08	4.407E-08	3.226E-08	2.488E-08	1.990E-08	1.634E-08	1.370E-08	1.166E-08
N	5.351E-07	2.830E-07	1.861E-07	1.077E-07	7.266E-08	5.324E-08	4.112E-08	3.293E-08	2.709E-08	2.274E-08	1.940E-08
NNE	2.447E-07	1.294E-07	8.504E-08	4.921E-08	3.317E-08	2.430E-08	1.876E-08	1.502E-08	1.235E-08	1.036E-08	8.839E-09
NE	1.293E-07	6.828E-08	4.482E-08	2.586E-08	1.739E-08	1.270E-08	9.776E-09	7.803E-09	6.397E-09	5.352E-09	4.551E-09
ENE	9.361E-08	4.950E-08	3.253E-08	1.879E-08	1.264E-08	9.242E-09	7.119E-09	5.686E-09	4.663E-09	3.904E-09	3.321E-09
E	8.741E-08	4.635E-08	3.051E-08	1.767E-08	1.190E-08	8.702E-09	6.707E-09	5.359E-09	4.397E-09	3.682E-09	3.133E-09
ESE	1.166E-07	6.152E-08	4.038E-08	2.330E-08	1.566E-08	1.145E-08	8.820E-09	7.047E-09	5.783E-09	4.843E-09	4.123E-09
SE	2.109E-07	1.112E-07	7.295E-08	4.209E-08	2.831E-08	2.070E-08	1.596E-08	1.276E-08	1.048E-08	8.785E-09	7.484E-09
SSE	2.399E-07	1.264E-07	8.294E-08	4.785E-08	3.220E-08	2.355E-08	1.815E-08	1.452E-08	1.192E-08	9.993E-09	8.513E-09

CHI/Q (SEC/METER CUBED) FOR EACH SEGMENT

SEGMENT BOUNDARIES IN MILES FROM THE SITE

DIRECTION FROM SITE	.5-1	1-2	2-3	3-4	4-5	5-10	10-20	20-30	30-40	40-50
S	1.099E-05	2.556E-06	8.166E-07	4.194E-07	2.633E-07	1.181E-07	4.239E-08	2.038E-08	1.249E-08	8.591E-09
SSW	3.714E-06	8.494E-07	2.711E-07	1.392E-07	8.739E-08	3.920E-08	1.409E-08	6.789E-09	4.164E-09	2.864E-09
SW	2.670E-06	6.074E-07	1.878E-07	9.468E-08	5.867E-08	2.580E-08	8.988E-09	4.231E-09	2.559E-09	1.742E-09
WSW	1.847E-06	4.181E-07	1.293E-07	6.525E-08	4.045E-08	1.780E-08	6.216E-09	2.939E-09	1.782E-09	1.216E-09
W	1.919E-06	4.473E-07	1.387E-07	6.998E-08	4.337E-08	1.905E-08	6.607E-09	3.089E-09	1.859E-09	1.259E-09
WNW	2.406E-06	5.407E-07	1.660E-07	8.344E-08	5.163E-08	2.272E-08	7.951E-09	3.770E-09	2.295E-09	1.572E-09
NW	6.120E-06	1.406E-06	4.441E-07	2.267E-07	1.418E-07	6.324E-08	2.253E-08	1.078E-08	6.583E-09	4.515E-09
NNW	1.503E-05	3.498E-06	1.168E-06	6.145E-07	3.918E-07	1.798E-07	6.652E-08	3.246E-08	1.997E-08	1.373E-08
N	2.447E-05	5.761E-06	1.924E-06	1.012E-06	6.450E-07	2.959E-07	1.096E-07	5.357E-08	3.305E-08	2.279E-08
NNE	1.125E-05	2.646E-06	8.819E-07	4.631E-07	2.951E-07	1.353E-07	5.004E-08	2.445E-08	1.507E-08	1.039E-08
NE	5.907E-06	1.392E-06	4.653E-07	2.446E-07	1.559E-07	7.141E-08	2.631E-08	1.278E-08	7.831E-09	5.365E-09
ENE	4.324E-06	1.006E-06	3.365E-07	1.770E-07	1.128E-07	5.176E-08	1.911E-08	9.299E-09	5.706E-09	3.913E-09
E	3.951E-06	9.257E-07	3.119E-07	1.647E-07	1.053E-07	4.844E-08	1.796E-08	8.756E-09	5.377E-09	3.690E-09
ESE	5.344E-06	1.261E-06	4.206E-07	2.208E-07	1.406E-07	6.436E-08	2.370E-08	1.152E-08	7.072E-09	4.855E-09
SE	9.741E-06	2.290E-06	7.621E-07	3.997E-07	2.544E-07	1.164E-07	4.283E-08	2.084E-08	1.281E-08	8.806E-09
SSE	1.124E-05	2.618E-06	8.686E-07	4.550E-07	2.894E-07	1.323E-07	4.869E-08	2.370E-08	1.457E-08	1.002E-08

VENTS GROUND LEVEL RELEASES - JUL-DEC 2012
8.000 DAY DECAY, DEPLETED
CORRECTED USING STANDARD OPEN TERRAIN FACTORS

ANNUAL AVERAGE CHI/Q (SEC/METER CUBED) DISTANCE IN MILES FROM THE SITE

SECTOR	.250	.500	.750	1.000	1.500	2.000	2.500	3.000	3.500	4.000	4.500
S	6.272E-05	1.956E-05	1.005E-05	4.923E-06	1.945E-06	1.037E-06	6.473E-07	4.455E-07	3.275E-07	2.523E-07	2.013E-07
SSW	2.172E-05	6.699E-06	3.375E-06	1.637E-06	6.463E-07	3.443E-07	2.150E-07	1.480E-07	1.088E-07	8.382E-08	6.690E-08
SW	1.492E-05	4.768E-06	2.443E-06	1.188E-06	4.588E-07	2.407E-07	1.486E-07	1.013E-07	7.391E-08	5.656E-08	4.488E-08
WSW	1.059E-05	3.315E-06	1.685E-06	8.176E-07	3.159E-07	1.658E-07	1.024E-07	6.986E-08	5.098E-08	3.903E-08	3.098E-08
W	1.051E-05	3.369E-06	1.769E-06	8.732E-07	3.382E-07	1.777E-07	1.098E-07	7.490E-08	5.464E-08	4.182E-08	3.318E-08
WNW	1.361E-05	4.324E-06	2.195E-06	1.060E-06	4.072E-07	2.129E-07	1.311E-07	8.927E-08	6.503E-08	4.972E-08	3.942E-08
NW	3.497E-05	1.095E-05	5.588E-06	2.722E-06	1.067E-06	5.656E-07	3.518E-07	2.415E-07	1.771E-07	1.361E-07	1.084E-07
NNW	9.328E-05	2.735E-05	1.358E-05	6.606E-06	2.697E-06	1.469E-06	9.323E-07	6.500E-07	4.828E-07	3.753E-07	3.017E-07
N	1.505E-04	4.412E-05	2.218E-05	1.087E-05	4.439E-06	2.417E-06	1.534E-06	1.069E-06	7.938E-07	6.168E-07	4.958E-07
NNE	6.977E-05	2.028E-05	1.019E-05	5.001E-06	2.038E-06	1.109E-06	7.031E-07	4.898E-07	3.635E-07	2.823E-07	2.269E-07
NE	3.661E-05	1.065E-05	5.353E-06	2.628E-06	1.074E-06	5.853E-07	3.715E-07	2.589E-07	1.923E-07	1.494E-07	1.201E-07
ENE	2.692E-05	7.873E-06	3.903E-06	1.900E-06	7.764E-07	4.231E-07	2.686E-07	1.873E-07	1.391E-07	1.081E-07	8.696E-08
E	2.467E-05	7.185E-06	3.568E-06	1.740E-06	7.156E-07	3.915E-07	2.492E-07	1.741E-07	1.295E-07	1.008E-07	8.115E-08
ESE	3.285E-05	9.614E-06	4.849E-06	2.383E-06	9.722E-07	5.290E-07	3.354E-07	2.337E-07	1.734E-07	1.347E-07	1.082E-07
SE	5.969E-05	1.757E-05	8.829E-06	4.329E-06	1.763E-06	9.587E-07	6.074E-07	4.228E-07	3.137E-07	2.435E-07	1.956E-07
SSE	6.885E-05	2.038E-05	1.017E-05	4.959E-06	2.014E-06	1.093E-06	6.922E-07	4.816E-07	3.571E-07	2.771E-07	2.226E-07

ANNUAL AVERAGE CHI/Q (SEC/METER CUBED) DISTANCE IN MILES FROM THE SITE

SECTOR	5.000	7.500	10.000	15.000	20.000	25.000	30.000	35.000	40.000	45.000	50.000
S	1.651E-07	8.175E-08	5.110E-08	2.752E-08	1.764E-08	1.243E-08	9.298E-09	7.247E-09	5.823E-09	4.788E-09	4.009E-09
SSW	5.488E-08	2.720E-08	1.702E-08	9.187E-09	5.906E-09	4.170E-09	3.125E-09	2.439E-09	1.962E-09	1.615E-09	1.353E-09
SW	3.663E-08	1.781E-08	1.100E-08	5.832E-09	3.703E-09	2.590E-09	1.926E-09	1.494E-09	1.196E-09	9.796E-10	8.178E-10
WSW	2.529E-08	1.231E-08	7.610E-09	4.046E-09	2.578E-09	1.809E-09	1.348E-09	1.048E-09	8.397E-10	6.889E-10	5.758E-10
W	2.708E-08	1.315E-08	8.109E-09	4.285E-09	2.710E-09	1.889E-09	1.401E-09	1.084E-09	8.659E-10	7.081E-10	5.901E-10
WNW	3.216E-08	1.565E-08	9.666E-09	5.134E-09	3.267E-09	2.289E-09	1.705E-09	1.325E-09	1.062E-09	8.713E-10	7.282E-10
NW	8.882E-08	4.378E-08	2.728E-08	1.464E-08	9.369E-09	6.592E-09	4.925E-09	3.836E-09	3.080E-09	2.531E-09	2.118E-09
NNW	2.491E-07	1.264E-07	8.030E-08	4.417E-08	2.869E-08	2.041E-08	1.537E-08	1.205E-08	9.725E-09	8.025E-09	6.740E-09
N	4.093E-07	2.074E-07	1.317E-07	7.233E-08	4.694E-08	3.337E-08	2.513E-08	1.969E-08	1.589E-08	1.311E-08	1.102E-08
NNE	1.873E-07	9.487E-08	6.021E-08	3.308E-08	2.146E-08	1.526E-08	1.149E-08	9.005E-09	7.267E-09	5.997E-09	5.037E-09
NE	9.915E-08	5.024E-08	3.188E-08	1.750E-08	1.135E-08	8.060E-09	6.064E-09	4.749E-09	3.829E-09	3.157E-09	2.649E-09
ENE	7.180E-08	3.643E-08	2.314E-08	1.272E-08	8.259E-09	5.871E-09	4.421E-09	3.464E-09	2.794E-09	2.305E-09	1.935E-09
E	6.706E-08	3.412E-08	2.171E-08	1.196E-08	7.773E-09	5.529E-09	4.165E-09	3.265E-09	2.635E-09	2.174E-09	1.826E-09
ESE	8.929E-08	4.517E-08	2.863E-08	1.570E-08	1.017E-08	7.220E-09	5.431E-09	4.252E-09	3.428E-09	2.826E-09	2.372E-09
SE	1.613E-07	8.152E-08	5.164E-08	2.829E-08	1.832E-08	1.300E-08	9.781E-09	7.657E-09	6.173E-09	5.090E-09	4.272E-09
SSE	1.835E-07	9.273E-08	5.874E-08	3.220E-08	2.086E-08	1.481E-08	1.114E-08	8.726E-09	7.037E-09	5.803E-09	4.871E-09

CHI/Q (SEC/METER CUBED) FOR EACH SEGMENT

SEGMENT BOUNDARIES IN MILES FROM THE SITE

DIRECTION FROM SITE	.5-1	1-2	2-3	3-4	4-5	5-10	10-20	20-30	30-40	40-50
S	9.883E-06	2.203E-06	6.704E-07	3.326E-07	2.030E-07	8.665E-08	2.837E-08	1.257E-08	7.290E-09	4.806E-09
SSW	3.341E-06	7.323E-07	2.227E-07	1.105E-07	6.746E-08	2.882E-08	9.469E-09	4.215E-09	2.453E-09	1.621E-09
SW	2.402E-06	5.239E-07	1.543E-07	7.513E-08	4.528E-08	1.897E-08	6.034E-09	2.621E-09	1.504E-09	9.837E-10
WSW	1.662E-06	3.607E-07	1.063E-07	5.182E-08	3.125E-08	1.311E-08	4.186E-09	1.830E-09	1.054E-09	6.917E-10
W	1.727E-06	3.858E-07	1.140E-07	5.555E-08	3.348E-08	1.400E-08	4.434E-09	1.913E-09	1.092E-09	7.111E-10
WNW	2.164E-06	4.660E-07	1.362E-07	6.612E-08	3.978E-08	1.666E-08	5.311E-09	2.316E-09	1.334E-09	8.748E-10
NW	5.505E-06	1.212E-06	3.647E-07	1.799E-07	1.094E-07	4.645E-08	1.511E-08	6.666E-09	3.859E-09	2.540E-09
NNW	1.354E-05	3.020E-06	9.625E-07	4.896E-07	3.040E-07	1.332E-07	4.532E-08	2.060E-08	1.211E-08	8.053E-09
N	2.203E-05	4.971E-06	1.584E-06	8.050E-07	4.996E-07	2.186E-07	7.423E-08	3.369E-08	1.980E-08	1.316E-08
NNE	1.013E-05	2.284E-06	7.260E-07	3.687E-07	2.287E-07	1.000E-07	3.394E-08	1.541E-08	9.053E-09	6.018E-09
NE	5.320E-06	1.202E-06	3.835E-07	1.950E-07	1.210E-07	5.295E-08	1.796E-08	8.138E-09	4.774E-09	3.168E-09
ENE	3.895E-06	8.690E-07	2.773E-07	1.411E-07	8.762E-08	3.838E-08	1.305E-08	5.927E-09	3.482E-09	2.313E-09
E	3.559E-06	7.993E-07	2.571E-07	1.313E-07	8.175E-08	3.592E-08	1.227E-08	5.582E-09	3.282E-09	2.182E-09
ESE	4.812E-06	1.089E-06	3.464E-07	1.759E-07	1.090E-07	4.762E-08	1.612E-08	7.292E-09	4.275E-09	2.836E-09
SE	8.771E-06	1.976E-06	6.272E-07	3.181E-07	1.971E-07	8.598E-08	2.905E-08	1.313E-08	7.699E-09	5.108E-09
SSE	1.012E-05	2.259E-06	7.149E-07	3.622E-07	2.243E-07	9.781E-08	3.306E-08	1.496E-08	8.773E-09	5.823E-09

VENTS GROUND LEVEL RELEASES - JUL-DEC 2012
CORRECTED USING STANDARD OPEN TERRAIN FACTORS

********** RELATIVE DEPOSITION PER UNIT AREA (M**-2) AT FIXED POINTS BY DOWNWIND SECTORS **********

DIRECTION FROM SITE	DISTANCES IN MILES .25	.50	.75	1.00	1.50	2.00	2.50	3.00	3.50	4.00	4.50
S	2.899E-07	9.802E-08	5.033E-08	2.393E-08	8.594E-09	4.262E-09	2.510E-09	1.643E-09	1.156E-09	8.569E-10	6.604E-10
SSW	9.649E-08	3.263E-08	1.675E-08	7.964E-09	2.861E-09	1.419E-09	8.354E-10	5.470E-10	3.849E-10	2.852E-10	2.198E-10
SW	6.012E-08	2.033E-08	1.044E-08	4.962E-09	1.782E-09	8.840E-10	5.205E-10	3.408E-10	2.398E-10	1.777E-10	1.370E-10
WSW	4.013E-08	1.357E-08	6.967E-09	3.312E-09	1.190E-09	5.900E-10	3.474E-10	2.275E-10	1.601E-10	1.186E-10	9.142E-11
W	3.956E-08	1.338E-08	6.869E-09	3.265E-09	1.173E-09	5.817E-10	3.425E-10	2.243E-10	1.578E-10	1.170E-10	9.012E-11
WNW	7.528E-08	2.546E-08	1.307E-08	6.214E-09	2.232E-09	1.107E-09	6.517E-10	4.268E-10	3.003E-10	2.225E-10	1.715E-10
NW	1.655E-07	5.596E-08	2.873E-08	1.366E-08	4.906E-09	2.433E-09	1.433E-09	9.381E-10	6.601E-10	4.892E-10	3.770E-10
NNW	2.517E-07	8.510E-08	4.370E-08	2.077E-08	7.462E-09	3.701E-09	2.179E-09	1.427E-09	1.004E-09	7.440E-10	5.734E-10
N	4.215E-07	1.425E-07	7.318E-08	3.479E-08	1.250E-08	6.197E-09	3.649E-09	2.389E-09	1.681E-09	1.246E-09	9.602E-10
NNE	2.004E-07	6.775E-08	3.479E-08	1.654E-08	5.941E-09	2.946E-09	1.735E-09	1.136E-09	7.993E-10	5.923E-10	4.565E-10
NE	7.359E-08	2.489E-08	1.278E-08	6.075E-09	2.182E-09	1.082E-09	6.372E-10	4.172E-10	2.936E-10	2.176E-10	1.677E-10
ENE	5.860E-08	1.982E-08	1.017E-08	4.837E-09	1.738E-09	8.617E-10	5.074E-10	3.322E-10	2.338E-10	1.732E-10	1.335E-10
E	5.120E-08	1.731E-08	8.890E-09	4.226E-09	1.518E-09	7.529E-10	4.433E-10	2.903E-10	2.042E-10	1.514E-10	1.166E-10
ESE	8.863E-08	2.997E-08	1.539E-08	7.316E-09	2.628E-09	1.303E-09	7.673E-10	5.024E-10	3.535E-10	2.620E-10	2.019E-10
SE	1.817E-07	6.145E-08	3.155E-08	1.500E-08	5.388E-09	2.672E-09	1.573E-09	1.030E-09	7.249E-10	5.372E-10	4.140E-10
SSE	2.219E-07	7.504E-08	3.853E-08	1.832E-08	6.579E-09	3.263E-09	1.921E-09	1.258E-09	8.852E-10	6.560E-10	5.055E-10

DIRECTION FROM SITE	DISTANCES IN MILES 5.00	7.50	10.00	15.00	20.00	25.00	30.00	35.00	40.00	45.00	50.00
S	5.246E-10	2.331E-10	1.412E-10	7.136E-11	4.319E-11	2.896E-11	2.075E-11	1.558E-11	1.211E-11	9.677E-12	7.898E-12
SSW	1.746E-10	7.758E-11	4.699E-11	2.375E-11	1.438E-11	9.639E-12	6.907E-12	5.186E-12	4.032E-12	3.221E-12	2.629E-12
SW	1.088E-10	4.833E-11	2.928E-11	1.480E-11	8.957E-12	6.006E-12	4.303E-12	3.231E-12	2.512E-12	2.007E-12	1.638E-12
WSW	7.263E-11	3.226E-11	1.954E-11	9.878E-12	5.979E-12	4.009E-12	2.872E-12	2.157E-12	1.677E-12	1.340E-12	1.093E-12
W	7.160E-11	3.181E-11	1.927E-11	9.738E-12	5.894E-12	3.952E-12	2.832E-12	2.126E-12	1.653E-12	1.321E-12	1.078E-12
WNW	1.362E-10	6.052E-11	3.666E-11	1.853E-11	1.122E-11	7.520E-12	5.388E-12	4.046E-12	3.146E-12	2.513E-12	2.051E-12
NW	2.995E-10	1.330E-10	8.059E-11	4.074E-11	2.466E-11	1.653E-11	1.185E-11	8.894E-12	6.916E-12	5.524E-12	4.509E-12
NNW	4.555E-10	2.023E-10	1.226E-10	6.196E-11	3.750E-11	2.514E-11	1.802E-11	1.353E-11	1.052E-11	8.402E-12	6.858E-12
N	7.628E-10	3.389E-10	2.053E-10	1.038E-10	6.280E-11	4.210E-11	3.017E-11	2.265E-11	1.761E-11	1.407E-11	1.148E-11
NNE	3.626E-10	1.611E-10	9.758E-11	4.932E-11	2.985E-11	2.002E-11	1.434E-11	1.077E-11	8.374E-12	6.689E-12	5.460E-12
NE	1.332E-10	5.917E-11	3.584E-11	1.812E-11	1.097E-11	7.352E-12	5.268E-12	3.956E-12	3.076E-12	2.457E-12	2.005E-12
ENE	1.061E-10	4.712E-11	2.854E-11	1.443E-11	8.731E-12	5.854E-12	4.195E-12	3.150E-12	2.449E-12	1.956E-12	1.597E-12
E	9.267E-11	4.117E-11	2.494E-11	1.260E-11	7.629E-12	5.115E-12	3.665E-12	2.752E-12	2.140E-12	1.709E-12	1.395E-12
ESE	1.604E-10	7.126E-11	4.316E-11	2.182E-11	1.321E-11	8.854E-12	6.344E-12	4.764E-12	3.704E-12	2.959E-12	2.415E-12
SE	3.289E-10	1.461E-10	8.850E-11	4.473E-11	2.707E-11	1.815E-11	1.301E-11	9.767E-12	7.594E-12	6.066E-12	4.951E-12
SSE	4.016E-10	1.784E-10	1.081E-10	5.462E-11	3.306E-11	2.217E-11	1.588E-11	1.193E-11	9.274E-12	7.408E-12	6.046E-12

********** RELATIVE DEPOSITION PER UNIT AREA (M**-2) BY DOWNWIND SECTORS **********

DIRECTION FROM SITE	SEGMENT BOUNDARIES IN MILES .5-1	1-2	2-3	3-4	4-5	5-10	10-20	20-30	30-40	40-50
S	4.919E-08	1.008E-08	2.630E-09	1.181E-09	6.683E-10	2.570E-10	7.435E-11	2.947E-11	1.574E-11	9.740E-12
SSW	1.637E-08	3.354E-09	8.756E-10	3.933E-10	2.225E-10	8.555E-11	2.475E-11	9.809E-12	5.238E-12	3.242E-12
SW	1.020E-08	2.090E-09	5.455E-10	2.450E-10	1.386E-10	5.330E-11	1.542E-11	6.112E-12	3.264E-12	2.020E-12
WSW	6.810E-09	1.395E-09	3.641E-10	1.635E-10	9.252E-11	3.558E-11	1.029E-11	4.079E-12	2.178E-12	1.348E-12
W	6.714E-09	1.375E-09	3.590E-10	1.612E-10	9.121E-11	3.508E-11	1.015E-11	4.022E-12	2.148E-12	1.329E-12
WNW	1.277E-08	2.617E-09	6.831E-10	3.068E-10	1.736E-10	6.674E-11	1.931E-11	7.653E-12	4.087E-12	2.530E-12
NW	2.808E-08	5.752E-09	1.502E-09	6.744E-10	3.815E-10	1.467E-10	4.245E-11	1.682E-11	8.984E-12	5.561E-12
NNW	4.271E-08	8.749E-09	2.284E-09	1.026E-09	5.803E-10	2.231E-10	6.456E-11	2.559E-11	1.366E-11	8.457E-12
N	7.153E-08	1.465E-08	3.825E-09	1.718E-09	9.718E-10	3.737E-10	1.081E-10	4.285E-11	2.288E-11	1.416E-11
NNE	3.400E-08	6.965E-09	1.818E-09	8.166E-10	4.620E-10	1.777E-10	5.139E-11	2.037E-11	1.088E-11	6.733E-12
NE	1.249E-08	2.558E-09	6.679E-10	2.999E-10	1.697E-10	6.525E-11	1.888E-11	7.482E-12	3.995E-12	2.473E-12
ENE	9.945E-09	2.037E-09	5.318E-10	2.388E-10	1.351E-10	5.196E-11	1.503E-11	5.958E-12	3.181E-12	1.969E-12
E	8.689E-09	1.780E-09	4.646E-10	2.087E-10	1.181E-10	4.540E-11	1.313E-11	5.205E-12	2.780E-12	1.721E-12
ESE	1.504E-08	3.081E-09	8.043E-10	3.612E-10	2.043E-10	7.858E-11	2.273E-11	9.010E-12	4.812E-12	2.978E-12
SE	3.084E-08	6.317E-09	1.649E-09	7.406E-10	4.190E-10	1.611E-10	4.661E-11	1.847E-11	9.865E-12	6.106E-12
SSE	3.766E-08	7.713E-09	2.014E-09	9.044E-10	5.116E-10	1.967E-10	5.692E-11	2.256E-11	1.205E-11	7.456E-12

VENTS GROUND LEVEL RELEASES - JUL-DEC 2012
CORRECTED USING STANDARD OPEN TERRAIN FACTORS
SPECIFIC POINTS OF INTEREST

RELEASE ID	TYPE OF LOCATION	DIRECTION FROM SITE	DIST. (MI)	X/Q (SEC/M3) NO DECAY UNDEPLETED	X/Q (SEC/M3) 2.26 DAY DECAY UNDEPLETED	X/Q (SEC/M3) 8.0 DAY DECAY DEPLETED	D/Q (PER SQ.METER)
A	Site Boundary	S	.80	9.7E-06	9.7E-06	8.6E-06	4.3E-08
A	Site Boundary	SSW	.82	3.0E-06	3.0E-06	2.7E-06	1.3E-08
A	Site Boundary	SW	.97	1.4E-06	1.4E-06	1.3E-06	5.3E-09
A	Site Boundary	WSW	.93	1.1E-06	1.1E-06	9.9E-07	4.0E-09
A	Site Boundary	W	.91	1.2E-06	1.2E-06	1.1E-06	4.1E-09
A	Site Boundary	WNW	.94	1.4E-06	1.4E-06	1.2E-06	7.3E-09
A	Site Boundary	NW	.81	5.2E-06	5.2E-06	4.6E-06	2.3E-08
A	Site Boundary	NNW	.69	1.8E-05	1.7E-05	1.6E-05	5.1E-08
A	Site Boundary	N	.67	2.9E-05	2.9E-05	2.6E-05	8.7E-08
A	Site Boundary	NNE	.60	1.6E-05	1.6E-05	1.5E-05	5.0E-08
A	Site Boundary	NE	.62	8.0E-06	8.0E-06	7.2E-06	1.7E-08
A	Site Boundary	ENE	.59	6.6E-06	6.6E-06	5.9E-06	1.5E-08
A	Site Boundary	E	.53	7.2E-06	7.2E-06	6.6E-06	1.6E-08
A	Site Boundary	ESE	.54	9.3E-06	9.3E-06	8.5E-06	2.7E-08
A	Site Boundary	SE	.65	1.2E-05	1.2E-05	1.1E-05	4.0E-08
A	Site Boundary	SSE	.81	9.4E-06	9.4E-06	8.3E-06	3.1E-08
A	Nearest Res	SSW	3.00	1.9E-07	1.8E-07	1.5E-07	5.5E-10
A	Nearest Res	SW	1.30	7.4E-07	7.4E-07	6.4E-07	2.5E-09
A	Nearest Res	WSW	1.90	2.2E-07	2.2E-07	1.9E-07	6.7E-10
A	Nearest Res	W	2.90	1.0E-07	1.0E-07	8.0E-08	2.4E-10
A	Nearest Res	WNW	1.70	3.7E-07	3.6E-07	3.1E-07	1.6E-09
A	Nearest Res	NW	.90	4.0E-06	4.0E-06	3.5E-06	1.8E-08
A	Nearest Res	NNW	1.90	2.0E-06	1.9E-06	1.6E-06	4.2E-09
A	Nearest Res	N	3.00	1.4E-06	1.3E-06	1.1E-06	2.4E-09
A	Nearest Res	NNE	1.90	1.5E-06	1.5E-06	1.2E-06	3.3E-09
A	Nearest Res	NE	3.00	3.3E-07	3.2E-07	2.6E-07	4.2E-10
A	Nearest Res	ENE	1.70	7.1E-07	7.0E-07	5.9E-07	1.3E-09
A	Nearest Res	E	2.20	3.9E-07	3.9E-07	3.2E-07	6.0E-10
A	Nearest Res	ESE	2.30	4.9E-07	4.8E-07	4.0E-07	9.3E-10
A	Nearest Res	SE	3.00	5.4E-07	5.2E-07	4.2E-07	1.0E-09
A	Nearest Cow	NNW	3.50	6.2E-07	6.1E-07	4.8E-07	1.0E-09
A	Nearest Garde	SSW	3.00	1.9E-07	1.8E-07	1.5E-07	5.5E-10
A	Nearest Garde	SW	1.30	7.4E-07	7.4E-07	6.4E-07	2.5E-09
A	Nearest Garde	WSW	1.90	2.2E-07	2.2E-07	1.9E-07	6.7E-10
A	Nearest Garde	W	2.90	1.0E-07	1.0E-07	8.0E-08	2.4E-10
A	Nearest Garde	WNW	2.40	1.8E-07	1.7E-07	1.4E-07	7.2E-10
A	Nearest Garde	NW	2.90	3.3E-07	3.2E-07	2.6E-07	1.0E-09
A	Nearest Garde	NNW	2.80	9.4E-07	9.2E-07	7.4E-07	1.7E-09
A	Nearest Garde	ENE	1.70	7.1E-07	7.0E-07	5.9E-07	1.3E-09
A	Nearest Garde	E	2.20	3.9E-07	3.9E-07	3.2E-07	6.0E-10
A	Nearest Garde	ESE	2.30	4.9E-07	4.8E-07	4.0E-07	9.3E-10

Atmospheric Diffusion Estimates

Ground Level Releases

January-December 2012

VENTS GROUND LEVEL RELEASES - JAN-DEC 2012
NO DECAY, UNDEPLETED
CORRECTED USING STANDARD OPEN TERRAIN FACTORS

ANNUAL AVERAGE CHI/Q (SEC/METER CUBED) DISTANCE IN MILES FROM THE SITE

SECTOR	.250	.500	.750	1.000	1.500	2.000	2.500	3.000	3.500	4.000	4.500
S	5.366E-05	1.730E-05	9.086E-06	4.528E-06	1.845E-06	1.009E-06	6.446E-07	4.529E-07	3.391E-07	2.658E-07	2.155E-07
SSW	2.054E-05	6.605E-06	3.440E-06	1.706E-06	6.903E-07	3.759E-07	2.394E-07	1.677E-07	1.254E-07	9.808E-08	7.942E-08
SW	1.280E-05	4.245E-06	2.221E-06	1.097E-06	4.360E-07	2.344E-07	1.479E-07	1.028E-07	7.636E-08	5.942E-08	4.788E-08
WSW	1.095E-05	3.647E-06	1.918E-06	9.492E-07	3.744E-07	2.003E-07	1.258E-07	8.717E-08	6.454E-08	5.009E-08	4.027E-08
W	1.079E-05	3.623E-06	1.931E-06	9.628E-07	3.821E-07	2.052E-07	1.292E-07	8.975E-08	6.656E-08	5.173E-08	4.164E-08
WNW	1.544E-05	5.069E-06	2.637E-06	1.300E-06	5.187E-07	2.798E-07	1.769E-07	1.233E-07	9.168E-08	7.144E-08	5.764E-08
NW	3.269E-05	1.070E-05	5.611E-06	2.782E-06	1.116E-06	6.043E-07	3.831E-07	2.676E-07	1.994E-07	1.556E-07	1.257E-07
NNW	7.795E-05	2.389E-05	1.223E-05	6.072E-06	2.545E-06	1.419E-06	9.194E-07	6.532E-07	4.936E-07	3.899E-07	3.183E-07
N	1.211E-04	3.710E-05	1.924E-05	9.624E-06	4.029E-06	2.244E-06	1.453E-06	1.031E-06	7.788E-07	6.148E-07	5.016E-07
NNE	5.907E-05	1.802E-05	9.395E-06	4.715E-06	1.969E-06	1.094E-06	7.075E-07	5.017E-07	3.786E-07	2.987E-07	2.435E-07
NE	2.979E-05	9.196E-06	4.810E-06	2.414E-06	1.005E-06	5.571E-07	3.595E-07	2.546E-07	1.919E-07	1.512E-07	1.232E-07
ENE	2.242E-05	6.915E-06	3.570E-06	1.778E-06	7.408E-07	4.112E-07	2.656E-07	1.882E-07	1.419E-07	1.119E-07	9.121E-08
E	1.989E-05	6.189E-06	3.211E-06	1.602E-06	6.667E-07	3.698E-07	2.387E-07	1.691E-07	1.274E-07	1.004E-07	8.184E-08
ESE	2.684E-05	8.367E-06	4.352E-06	2.172E-06	8.995E-07	4.974E-07	3.203E-07	2.265E-07	1.705E-07	1.342E-07	1.093E-07
SE	4.516E-05	1.411E-05	7.380E-06	3.697E-06	1.532E-06	8.471E-07	5.455E-07	3.856E-07	2.902E-07	2.284E-07	1.859E-07
SSE	5.547E-05	1.727E-05	8.924E-06	4.441E-06	1.844E-06	1.021E-06	6.586E-07	4.661E-07	3.512E-07	2.767E-07	2.253E-07

ANNUAL AVERAGE CHI/Q (SEC/METER CUBED) DISTANCE IN MILES FROM THE SITE

SECTOR	5.000	7.500	10.000	15.000	20.000	25.000	30.000	35.000	40.000	45.000	50.000
S	1.795E-07	9.442E-08	6.223E-08	3.657E-08	2.520E-08	1.892E-08	1.499E-08	1.232E-08	1.041E-08	8.968E-09	7.854E-09
SSW	6.605E-08	3.461E-08	2.275E-08	1.334E-08	9.184E-09	6.892E-09	5.458E-09	4.486E-09	3.787E-09	3.264E-09	2.858E-09
SW	3.966E-08	2.047E-08	1.332E-08	7.695E-09	5.250E-09	3.912E-09	3.081E-09	2.520E-09	2.119E-09	1.820E-09	1.589E-09
WSW	3.329E-08	1.705E-08	1.103E-08	6.325E-09	4.296E-09	3.190E-09	2.506E-09	2.045E-09	1.716E-09	1.471E-09	1.282E-09
W	3.445E-08	1.769E-08	1.146E-08	6.579E-09	4.461E-09	3.308E-09	2.594E-09	2.114E-09	1.772E-09	1.518E-09	1.322E-09
WNW	4.780E-08	2.479E-08	1.618E-08	9.397E-09	6.432E-09	4.805E-09	3.792E-09	3.108E-09	2.617E-09	2.251E-09	1.968E-09
NW	1.043E-07	5.428E-08	3.550E-08	2.065E-08	1.415E-08	1.058E-08	8.350E-09	6.845E-09	5.766E-09	4.959E-09	4.335E-09
NNW	2.666E-07	1.433E-07	9.583E-08	5.741E-08	4.007E-08	3.037E-08	2.424E-08	2.005E-08	1.703E-08	1.474E-08	1.296E-08
N	4.199E-07	2.253E-07	1.504E-07	8.991E-08	6.263E-08	4.740E-08	3.779E-08	3.123E-08	2.649E-08	2.292E-08	2.014E-08
NNE	2.038E-07	1.091E-07	7.279E-08	4.345E-08	3.024E-08	2.287E-08	1.823E-08	1.506E-08	1.276E-08	1.104E-08	9.698E-09
NE	1.030E-07	5.497E-08	3.658E-08	2.176E-08	1.512E-08	1.142E-08	9.086E-09	7.497E-09	6.351E-09	5.489E-09	4.818E-09
ENE	7.629E-08	4.081E-08	2.720E-08	1.623E-08	1.129E-08	8.539E-09	6.805E-09	5.621E-09	4.766E-09	4.122E-09	3.621E-09
E	6.843E-08	3.655E-08	2.434E-08	1.449E-08	1.007E-08	7.610E-09	6.059E-09	5.001E-09	4.238E-09	3.664E-09	3.217E-09
ESE	9.129E-08	4.862E-08	3.231E-08	1.920E-08	1.332E-08	1.006E-08	8.001E-09	6.600E-09	5.589E-09	4.830E-09	4.239E-09
SE	1.553E-07	8.256E-08	5.481E-08	3.250E-08	2.252E-08	1.698E-08	1.350E-08	1.112E-08	9.415E-09	8.130E-09	7.132E-09
SSE	1.884E-07	1.005E-07	6.686E-08	3.979E-08	2.765E-08	2.089E-08	1.663E-08	1.373E-08	1.163E-08	1.006E-08	8.830E-09

CHI/Q (SEC/METER CUBED) FOR EACH SEGMENT
SEGMENT BOUNDARIES IN MILES FROM THE SITE

DIRECTION FROM SITE	.5-1	1-2	2-3	3-4	4-5	5-10	10-20	20-30	30-40	40-50
S	8.885E-06	2.070E-06	6.651E-07	3.437E-07	2.171E-07	9.902E-08	3.722E-08	1.903E-08	1.236E-08	8.982E-09
SSW	3.372E-06	7.762E-07	2.471E-07	1.271E-07	8.000E-08	3.633E-08	1.358E-08	6.929E-09	4.498E-09	3.269E-09
SW	2.171E-06	4.934E-07	1.529E-07	7.747E-08	4.825E-08	2.156E-08	7.858E-09	3.936E-09	2.528E-09	1.823E-09
WSW	1.872E-06	4.248E-07	1.302E-07	6.550E-08	4.059E-08	1.798E-08	6.468E-09	3.211E-09	2.051E-09	1.474E-09
W	1.877E-06	4.325E-07	1.337E-07	6.754E-08	4.197E-08	1.865E-08	6.723E-09	3.330E-09	2.121E-09	1.521E-09
WNW	2.583E-06	5.862E-07	1.829E-07	9.299E-08	5.809E-08	2.608E-08	9.587E-09	4.834E-09	3.117E-09	2.255E-09
NW	5.484E-06	1.259E-06	3.959E-07	2.022E-07	1.266E-07	5.706E-08	2.106E-08	1.064E-08	6.864E-09	4.967E-09
NNW	1.209E-05	2.829E-06	9.461E-07	4.997E-07	3.204E-07	1.496E-07	5.824E-08	3.051E-08	2.010E-08	1.476E-08
N	1.894E-05	4.479E-06	1.495E-06	7.884E-07	5.049E-07	2.353E-07	9.123E-08	4.762E-08	3.130E-08	2.294E-08
NNE	9.231E-06	2.190E-06	7.283E-07	3.833E-07	2.451E-07	1.140E-07	4.410E-08	2.298E-08	1.509E-08	1.105E-08
NE	4.720E-06	1.119E-06	3.702E-07	1.943E-07	1.240E-07	5.746E-08	2.210E-08	1.147E-08	7.515E-09	5.496E-09
ENE	3.517E-06	8.249E-07	2.734E-07	1.437E-07	9.182E-08	4.265E-08	1.647E-08	8.579E-09	5.633E-09	4.127E-09
E	3.158E-06	7.426E-07	2.458E-07	1.290E-07	8.239E-08	3.821E-08	1.472E-08	7.646E-09	5.013E-09	3.669E-09
ESE	4.275E-06	1.004E-06	3.300E-07	1.727E-07	1.100E-07	5.085E-08	1.950E-08	1.011E-08	6.615E-09	4.836E-09
SE	7.238E-06	1.709E-06	5.620E-07	2.939E-07	1.871E-07	8.638E-08	3.302E-08	1.707E-08	1.115E-08	8.141E-09
SSE	8.786E-06	2.055E-06	6.784E-07	3.556E-07	2.268E-07	1.051E-07	4.041E-08	2.099E-08	1.376E-08	1.007E-08

VENTS GROUND LEVEL RELEASES - JAN-DEC 2012
2.260 DAY DECAY, UNDEPLETED
CORRECTED USING STANDARD OPEN TERRAIN FACTORS

ANNUAL AVERAGE CHI/Q (SEC/METER CUBED) DISTANCE IN MILES FROM THE SITE

SECTOR	.250	.500	.750	1.000	1.500	2.000	2.500	3.000	3.500	4.000	4.500
S	5.359E-05	1.726E-05	9.053E-06	4.507E-06	1.831E-06	9.988E-07	6.364E-07	4.459E-07	3.330E-07	2.602E-07	2.104E-07
SSW	2.052E-05	6.588E-06	3.427E-06	1.697E-06	6.850E-07	3.720E-07	2.362E-07	1.651E-07	1.230E-07	9.596E-08	7.748E-08
SW	1.278E-05	4.234E-06	2.213E-06	1.092E-06	4.327E-07	2.320E-07	1.460E-07	1.012E-07	7.495E-08	5.816E-08	4.674E-08
WSW	1.094E-05	3.638E-06	1.911E-06	9.448E-07	3.718E-07	1.983E-07	1.242E-07	8.588E-08	6.341E-08	4.909E-08	3.936E-08
W	1.078E-05	3.614E-06	1.924E-06	9.582E-07	3.793E-07	2.031E-07	1.276E-07	8.839E-08	6.537E-08	5.067E-08	4.068E-08
WNW	1.542E-05	5.056E-06	2.627E-06	1.294E-06	5.149E-07	2.770E-07	1.746E-07	1.213E-07	9.000E-08	6.994E-08	5.627E-08
NW	3.265E-05	1.068E-05	5.591E-06	2.769E-06	1.108E-06	5.985E-07	3.785E-07	2.636E-07	1.959E-07	1.525E-07	1.228E-07
NNW	7.781E-05	2.381E-05	1.218E-05	6.034E-06	2.521E-06	1.401E-06	9.044E-07	6.404E-07	4.823E-07	3.797E-07	3.089E-07
N	1.209E-04	3.699E-05	1.916E-05	9.568E-06	3.993E-06	2.217E-06	1.431E-06	1.012E-06	7.622E-07	5.998E-07	4.878E-07
NNE	5.898E-05	1.796E-05	9.353E-06	4.687E-06	1.951E-06	1.081E-06	6.967E-07	4.925E-07	3.705E-07	2.913E-07	2.368E-07
NE	2.974E-05	9.167E-06	4.788E-06	2.399E-06	9.951E-07	5.500E-07	3.538E-07	2.497E-07	1.875E-07	1.473E-07	1.196E-07
ENE	2.238E-05	6.893E-06	3.553E-06	1.767E-06	7.337E-07	4.058E-07	2.612E-07	1.845E-07	1.386E-07	1.089E-07	8.849E-08
E	1.986E-05	6.170E-06	3.197E-06	1.593E-06	6.606E-07	3.652E-07	2.350E-07	1.659E-07	1.247E-07	9.793E-08	7.954E-08
ESE	2.680E-05	8.342E-06	4.333E-06	2.159E-06	8.915E-07	4.914E-07	3.155E-07	2.223E-07	1.668E-07	1.309E-07	1.062E-07
SE	4.509E-05	1.407E-05	7.349E-06	3.677E-06	1.519E-06	8.374E-07	5.376E-07	3.788E-07	2.842E-07	2.230E-07	1.809E-07
SSE	5.538E-05	1.722E-05	8.886E-06	4.415E-06	1.828E-06	1.009E-06	6.487E-07	4.576E-07	3.437E-07	2.699E-07	2.191E-07

ANNUAL AVERAGE CHI/Q (SEC/METER CUBED) DISTANCE IN MILES FROM THE SITE

SECTOR	5.000	7.500	10.000	15.000	20.000	25.000	30.000	35.000	40.000	45.000	50.000
S	1.747E-07	9.065E-08	5.890E-08	3.366E-08	2.256E-08	1.648E-08	1.271E-08	1.018E-08	8.373E-09	7.033E-09	6.006E-09
SSW	6.425E-08	3.318E-08	2.149E-08	1.223E-08	8.184E-09	5.969E-09	4.597E-09	3.675E-09	3.019E-09	2.533E-09	2.160E-09
SW	3.860E-08	1.964E-08	1.260E-08	7.078E-09	4.695E-09	3.403E-09	2.608E-09	2.077E-09	1.701E-09	1.423E-09	1.210E-09
WSW	3.245E-08	1.639E-08	1.046E-08	5.841E-09	3.863E-09	2.793E-09	2.137E-09	1.700E-09	1.390E-09	1.162E-09	9.882E-10
W	3.357E-08	1.700E-08	1.087E-08	6.070E-09	4.006E-09	2.892E-09	2.209E-09	1.754E-09	1.432E-09	1.196E-09	1.015E-09
WNW	4.653E-08	2.379E-08	1.531E-08	8.636E-09	5.745E-09	4.173E-09	3.204E-09	2.555E-09	2.094E-09	1.754E-09	1.493E-09
NW	1.017E-07	5.218E-08	3.366E-08	1.906E-08	1.271E-08	9.248E-09	7.112E-09	5.679E-09	4.663E-09	3.911E-09	3.335E-09
NNW	2.578E-07	1.362E-07	8.954E-08	5.186E-08	3.502E-08	2.569E-08	1.986E-08	1.593E-08	1.311E-08	1.101E-08	9.402E-09
N	4.071E-07	2.149E-07	1.413E-07	8.184E-08	5.529E-08	4.061E-08	3.143E-08	2.523E-08	2.080E-08	1.750E-08	1.496E-08
NNE	1.975E-07	1.041E-07	6.834E-08	3.953E-08	2.668E-08	1.958E-08	1.515E-08	1.215E-08	1.001E-08	8.417E-09	7.192E-09
NE	9.964E-08	5.230E-08	3.422E-08	1.970E-08	1.324E-08	9.684E-09	7.468E-09	5.973E-09	4.907E-09	4.115E-09	3.507E-09
ENE	7.376E-08	3.878E-08	2.541E-08	1.465E-08	9.859E-09	7.215E-09	5.567E-09	4.455E-09	3.661E-09	3.071E-09	2.618E-09
E	6.629E-08	3.483E-08	2.282E-08	1.316E-08	8.860E-09	6.489E-09	5.011E-09	4.014E-09	3.303E-09	2.774E-09	2.367E-09
ESE	8.845E-08	4.634E-08	3.030E-08	1.743E-08	1.172E-08	8.574E-09	6.615E-09	5.294E-09	4.353E-09	3.653E-09	3.115E-09
SE	1.507E-07	7.888E-08	5.155E-08	2.964E-08	1.993E-08	1.458E-08	1.125E-08	9.009E-09	7.410E-09	6.222E-09	5.309E-09
SSE	1.825E-07	9.582E-08	6.273E-08	3.615E-08	2.433E-08	1.782E-08	1.376E-08	1.102E-08	9.065E-09	7.612E-09	6.496E-09

CHI/Q (SEC/METER CUBED) FOR EACH SEGMENT
SEGMENT BOUNDARIES IN MILES FROM THE SITE

DIRECTION FROM SITE	.5-1	1-2	2-3	3-4	4-5	5-10	10-20	20-30	30-40	40-50
S	8.855E-06	2.056E-06	6.568E-07	3.375E-07	2.120E-07	9.523E-08	3.434E-08	1.660E-08	1.021E-08	7.050E-09
SSW	3.361E-06	7.708E-07	2.440E-07	1.247E-07	7.806E-08	3.489E-08	1.249E-08	6.011E-09	3.688E-09	2.539E-09
SW	2.164E-06	4.900E-07	1.510E-07	7.606E-08	4.711E-08	2.073E-08	7.246E-09	3.430E-09	2.085E-09	1.426E-09
WSW	1.866E-06	4.220E-07	1.287E-07	6.437E-08	3.968E-08	1.733E-08	5.989E-09	2.816E-09	1.707E-09	1.165E-09
W	1.870E-06	4.296E-07	1.321E-07	6.635E-08	4.101E-08	1.796E-08	6.219E-09	2.916E-09	1.761E-09	1.199E-09
WNW	2.575E-06	5.823E-07	1.806E-07	9.131E-08	5.671E-08	2.507E-08	8.834E-09	4.205E-09	2.565E-09	1.758E-09
NW	5.467E-06	1.251E-06	3.912E-07	1.987E-07	1.238E-07	5.495E-08	1.948E-08	9.316E-09	5.701E-09	3.920E-09
NNW	1.203E-05	2.804E-06	9.311E-07	4.884E-07	3.109E-07	1.425E-07	5.275E-08	2.585E-08	1.598E-08	1.104E-08
N	1.886E-05	4.443E-06	1.473E-06	7.718E-07	4.911E-07	2.249E-07	8.325E-08	4.085E-08	2.532E-08	1.754E-08
NNE	9.192E-06	2.172E-06	7.175E-07	3.752E-07	2.384E-07	1.090E-07	4.022E-08	1.970E-08	1.219E-08	8.435E-09
NE	4.699E-06	1.109E-06	3.645E-07	1.900E-07	1.204E-07	5.479E-08	2.006E-08	9.747E-09	5.994E-09	4.124E-09
ENE	3.502E-06	8.177E-07	2.691E-07	1.404E-07	8.909E-08	4.061E-08	1.491E-08	7.261E-09	4.470E-09	3.078E-09
E	3.145E-06	7.365E-07	2.421E-07	1.263E-07	8.008E-08	3.648E-08	1.339E-08	6.530E-09	4.028E-09	2.780E-09
ESE	4.258E-06	9.954E-07	3.251E-07	1.690E-07	1.069E-07	4.857E-08	1.775E-08	8.629E-09	5.313E-09	3.661E-09
SE	7.210E-06	1.696E-06	5.540E-07	2.880E-07	1.822E-07	8.269E-08	3.019E-08	1.467E-08	9.041E-09	6.236E-09
SSE	8.751E-06	2.039E-06	6.684E-07	3.481E-07	2.206E-07	1.004E-07	3.680E-08	1.793E-08	1.106E-08	7.629E-09

VENTS GROUND LEVEL RELEASES - JAN-DEC 2012
8.000 DAY DECAY, DEPLETED
CORRECTED USING STANDARD OPEN TERRAIN FACTORS

ANNUAL AVERAGE CHI/Q (SEC/METER CUBED) DISTANCE IN MILES FROM THE SITE

SECTOR	.250	.500	.750	1.000	1.500	2.000	2.500	3.000	3.500	4.000	4.500
S	5.077E-05	1.579E-05	8.089E-06	3.958E-06	1.563E-06	8.331E-07	5.202E-07	3.581E-07	2.633E-07	2.028E-07	1.619E-07
SSW	1.943E-05	6.027E-06	3.062E-06	1.491E-06	5.850E-07	3.103E-07	1.932E-07	1.326E-07	9.729E-08	7.483E-08	5.963E-08
SW	1.211E-05	3.873E-06	1.977E-06	9.591E-07	3.695E-07	1.936E-07	1.193E-07	8.132E-08	5.927E-08	4.533E-08	3.595E-08
WSW	1.036E-05	3.328E-06	1.708E-06	8.298E-07	3.173E-07	1.654E-07	1.015E-07	6.895E-08	5.011E-08	3.823E-08	3.025E-08
W	1.021E-05	3.306E-06	1.719E-06	8.416E-07	3.238E-07	1.694E-07	1.043E-07	7.098E-08	5.167E-08	3.948E-08	3.128E-08
WNW	1.461E-05	4.625E-06	2.347E-06	1.137E-06	4.396E-07	2.310E-07	1.428E-07	9.747E-08	7.116E-08	5.451E-08	4.329E-08
NW	3.093E-05	9.765E-06	4.995E-06	2.432E-06	9.461E-07	4.991E-07	3.093E-07	2.116E-07	1.548E-07	1.187E-07	9.442E-08
NNW	7.373E-05	2.180E-05	1.089E-05	5.306E-06	2.156E-06	1.171E-06	7.413E-07	5.159E-07	3.826E-07	2.971E-07	2.386E-07
N	1.145E-04	3.385E-05	1.713E-05	8.411E-06	3.413E-06	1.852E-06	1.172E-06	8.148E-07	6.040E-07	4.686E-07	3.763E-07
NNE	5.588E-05	1.644E-05	8.361E-06	4.120E-06	1.668E-06	9.031E-07	5.706E-07	3.964E-07	2.936E-07	2.276E-07	1.827E-07
NE	2.818E-05	8.390E-06	4.281E-06	2.110E-06	8.509E-07	4.596E-07	2.899E-07	2.011E-07	1.487E-07	1.152E-07	9.235E-08
ENE	2.121E-05	6.309E-06	3.177E-06	1.554E-06	6.274E-07	3.392E-07	2.141E-07	1.486E-07	1.100E-07	8.525E-08	6.837E-08
E	1.882E-05	5.647E-06	2.858E-06	1.400E-06	5.647E-07	3.051E-07	1.925E-07	1.336E-07	9.882E-08	7.655E-08	6.138E-08
ESE	2.539E-05	7.634E-06	3.873E-06	1.898E-06	7.620E-07	4.105E-07	2.584E-07	1.790E-07	1.322E-07	1.023E-07	8.195E-08
SE	4.272E-05	1.287E-05	6.568E-06	3.231E-06	1.298E-06	6.992E-07	4.400E-07	3.048E-07	2.251E-07	1.742E-07	1.395E-07
SSE	5.247E-05	1.576E-05	7.943E-06	3.881E-06	1.562E-06	8.429E-07	5.312E-07	3.683E-07	2.723E-07	2.109E-07	1.690E-07

ANNUAL AVERAGE CHI/Q (SEC/METER CUBED) DISTANCE IN MILES FROM THE SITE

SECTOR	5.000	7.500	10.000	15.000	20.000	25.000	30.000	35.000	40.000	45.000	50.000
S	1.328E-07	6.579E-08	4.115E-08	2.220E-08	1.425E-08	1.005E-08	7.527E-09	5.873E-09	4.724E-09	3.888E-09	3.258E-09
SSW	4.885E-08	2.411E-08	1.504E-08	8.087E-09	5.185E-09	3.655E-09	2.735E-09	2.133E-09	1.715E-09	1.411E-09	1.182E-09
SW	2.934E-08	1.426E-08	8.805E-09	4.670E-09	2.968E-09	2.078E-09	1.546E-09	1.201E-09	9.618E-10	7.888E-10	6.591E-10
WSW	2.463E-08	1.188E-08	7.297E-09	3.843E-09	2.432E-09	1.698E-09	1.261E-09	9.770E-10	7.812E-10	6.398E-10	5.339E-10
W	2.549E-08	1.233E-08	7.585E-09	3.997E-09	2.525E-09	1.760E-09	1.305E-09	1.010E-09	8.067E-10	6.599E-10	5.502E-10
WNW	3.536E-08	1.727E-08	1.070E-08	5.701E-09	3.634E-09	2.550E-09	1.902E-09	1.479E-09	1.186E-09	9.741E-10	8.147E-10
NW	7.721E-08	3.783E-08	2.349E-08	1.255E-08	8.007E-09	5.625E-09	4.198E-09	3.267E-09	2.622E-09	2.154E-09	1.802E-09
NNW	1.968E-07	9.956E-08	6.313E-08	3.466E-08	2.249E-08	1.599E-08	1.205E-08	9.445E-09	7.626E-09	6.296E-09	5.291E-09
N	3.103E-07	1.567E-07	9.924E-08	5.440E-08	3.526E-08	2.505E-08	1.886E-08	1.479E-08	1.194E-08	9.854E-09	8.281E-09
NNE	1.505E-07	7.590E-08	4.802E-08	2.628E-08	1.702E-08	1.209E-08	9.097E-09	7.127E-09	5.751E-09	4.746E-09	3.987E-09
NE	7.604E-08	3.820E-08	2.411E-08	1.315E-08	8.493E-09	6.018E-09	4.521E-09	3.536E-09	2.849E-09	2.348E-09	1.970E-09
ENE	5.632E-08	2.835E-08	1.792E-08	9.795E-09	6.337E-09	4.496E-09	3.381E-09	2.646E-09	2.134E-09	1.760E-09	1.477E-09
E	5.055E-08	2.541E-08	1.605E-08	8.762E-09	5.665E-09	4.017E-09	3.020E-09	2.364E-09	1.906E-09	1.572E-09	1.319E-09
ESE	6.744E-08	3.381E-08	2.131E-08	1.161E-08	7.494E-09	5.308E-09	3.987E-09	3.119E-09	2.513E-09	2.071E-09	1.738E-09
SE	1.147E-07	5.745E-08	3.618E-08	1.968E-08	1.269E-08	8.982E-09	6.742E-09	5.271E-09	4.246E-09	3.499E-09	2.936E-09
SSE	1.392E-07	6.988E-08	4.410E-08	2.406E-08	1.555E-08	1.102E-08	8.287E-09	6.486E-09	5.229E-09	4.312E-09	3.620E-09

CHI/Q (SEC/METER CUBED) FOR EACH SEGMENT
SEGMENT BOUNDARIES IN MILES FROM THE SITE

DIRECTION FROM SITE	.5-1	1-2	2-3	3-4	4-5	5-10	10-20	20-30	30-40	40-50
S	7.963E-06	1.771E-06	5.388E-07	2.673E-07	1.632E-07	6.972E-08	2.288E-08	1.016E-08	5.908E-09	3.902E-09
SSW	3.023E-06	6.642E-07	2.002E-07	9.883E-08	6.014E-08	2.557E-08	8.342E-09	3.695E-09	2.146E-09	1.416E-09
SW	1.946E-06	4.223E-07	1.239E-07	6.026E-08	3.628E-08	1.519E-08	4.833E-09	2.103E-09	1.209E-09	7.920E-10
WSW	1.678E-06	3.637E-07	1.055E-07	5.097E-08	3.053E-08	1.268E-08	3.984E-09	1.719E-09	9.835E-10	6.425E-10
W	1.682E-06	3.703E-07	1.083E-07	5.255E-08	3.156E-08	1.315E-08	4.140E-09	1.782E-09	1.017E-09	6.627E-10
WNW	2.316E-06	5.018E-07	1.482E-07	7.233E-08	4.368E-08	1.837E-08	5.893E-09	2.580E-09	1.488E-09	9.780E-10
NW	4.916E-06	1.078E-06	3.208E-07	1.573E-07	9.526E-08	4.021E-08	1.296E-08	5.689E-09	3.287E-09	2.162E-09
NNW	1.083E-05	2.418E-06	7.656E-07	3.881E-07	2.405E-07	1.050E-07	3.558E-08	1.615E-08	9.495E-09	6.318E-09
N	1.697E-05	3.830E-06	1.210E-06	6.127E-07	3.792E-07	1.653E-07	5.586E-08	2.530E-08	1.487E-08	9.888E-09
NNE	8.271E-06	1.873E-06	5.896E-07	2.979E-07	1.841E-07	8.010E-08	2.700E-08	1.221E-08	7.166E-09	4.763E-09
NE	4.229E-06	9.567E-07	2.996E-07	1.509E-07	9.308E-08	4.035E-08	1.351E-08	6.079E-09	3.556E-09	2.357E-09
ENE	3.152E-06	7.052E-07	2.213E-07	1.116E-07	6.891E-08	2.993E-08	1.006E-08	4.541E-09	2.661E-09	1.766E-09
E	2.830E-06	6.350E-07	1.990E-07	1.003E-07	6.186E-08	2.684E-08	9.005E-09	4.057E-09	2.377E-09	1.577E-09
ESE	3.831E-06	8.582E-07	2.672E-07	1.342E-07	8.261E-08	3.573E-08	1.194E-08	5.363E-09	3.136E-09	2.079E-09
SE	6.486E-06	1.461E-06	4.550E-07	2.285E-07	1.406E-07	6.073E-08	2.024E-08	9.075E-09	5.301E-09	3.512E-09
SSE	7.874E-06	1.758E-06	5.492E-07	2.764E-07	1.704E-07	7.382E-08	2.473E-08	1.114E-08	6.521E-09	4.327E-09

VENTS GROUND LEVEL RELEASES - JAN-DEC 2012
CORRECTED USING STANDARD OPEN TERRAIN FACTORS

********** RELATIVE DEPOSITION PER UNIT AREA (M**-2) AT FIXED POINTS BY DOWNWIND SECTORS **********

DIRECTION FROM SITE	DISTANCES IN MILES .25	.50	.75	1.00	1.50	2.00	2.50	3.00	3.50	4.00	4.50
S	2.487E-07	8.408E-08	4.317E-08	2.052E-08	7.373E-09	3.656E-09	2.153E-09	1.410E-09	9.919E-10	7.351E-10	5.665E-10
SSW	9.153E-08	3.095E-08	1.589E-08	7.556E-09	2.714E-09	1.346E-09	7.925E-10	5.189E-10	3.651E-10	2.706E-10	2.085E-10
SW	5.765E-08	1.950E-08	1.001E-08	4.759E-09	1.709E-09	8.478E-10	4.992E-10	3.269E-10	2.300E-10	1.704E-10	1.313E-10
WSW	5.419E-08	1.833E-08	9.409E-09	4.473E-09	1.607E-09	7.969E-10	4.692E-10	3.072E-10	2.162E-10	1.602E-10	1.235E-10
W	5.234E-08	1.770E-08	9.088E-09	4.320E-09	1.552E-09	7.696E-10	4.532E-10	2.967E-10	2.088E-10	1.547E-10	1.192E-10
WNW	7.747E-08	2.620E-08	1.345E-08	6.395E-09	2.297E-09	1.139E-09	6.708E-10	4.392E-10	3.090E-10	2.290E-10	1.765E-10
NW	1.811E-07	6.123E-08	3.144E-08	1.495E-08	5.368E-09	2.662E-09	1.568E-09	1.026E-09	7.223E-10	5.353E-10	4.125E-10
NNW	2.484E-07	8.401E-08	4.314E-08	2.051E-08	7.366E-09	3.653E-09	2.151E-09	1.409E-09	9.911E-10	7.345E-10	5.660E-10
N	4.068E-07	1.375E-07	7.062E-08	3.357E-08	1.206E-08	5.981E-09	3.522E-09	2.306E-09	1.623E-09	1.202E-09	9.267E-10
NNE	1.901E-07	6.430E-08	3.301E-08	1.569E-08	5.638E-09	2.796E-09	1.646E-09	1.078E-09	7.585E-10	5.621E-10	4.332E-10
NE	8.838E-08	2.989E-08	1.535E-08	7.295E-09	2.620E-09	1.300E-09	7.652E-10	5.011E-10	3.526E-10	2.613E-10	2.013E-10
ENE	6.453E-08	2.182E-08	1.120E-08	5.326E-09	1.913E-09	9.488E-10	5.587E-10	3.658E-10	2.574E-10	1.908E-10	1.470E-10
E	6.261E-08	2.117E-08	1.087E-08	5.168E-09	1.856E-09	9.206E-10	5.420E-10	3.549E-10	2.497E-10	1.851E-10	1.426E-10
ESE	9.911E-08	3.352E-08	1.721E-08	8.181E-09	2.939E-09	1.457E-09	8.581E-10	5.619E-10	3.954E-10	2.930E-10	2.258E-10
SE	1.793E-07	6.063E-08	3.113E-08	1.480E-08	5.316E-09	2.636E-09	1.552E-09	1.016E-09	7.153E-10	5.301E-10	4.085E-10
SSE	2.139E-07	7.232E-08	3.713E-08	1.765E-08	6.341E-09	3.145E-09	1.852E-09	1.212E-09	8.531E-10	6.322E-10	4.872E-10

DIRECTION FROM SITE	DISTANCES IN MILES 5.00	7.50	10.00	15.00	20.00	25.00	30.00	35.00	40.00	45.00	50.00
S	4.500E-10	1.999E-10	1.211E-10	6.121E-11	3.705E-11	2.484E-11	1.780E-11	1.337E-11	1.039E-11	8.301E-12	6.776E-12
SSW	1.657E-10	7.360E-11	4.458E-11	2.253E-11	1.364E-11	9.144E-12	6.552E-12	4.920E-12	3.825E-12	3.056E-12	2.494E-12
SW	1.043E-10	4.636E-11	2.808E-11	1.419E-11	8.590E-12	5.760E-12	4.127E-12	3.099E-12	2.410E-12	1.925E-12	1.571E-12
WSW	9.808E-11	4.357E-11	2.639E-11	1.334E-11	8.074E-12	5.414E-12	3.879E-12	2.913E-12	2.265E-12	1.809E-12	1.477E-12
W	9.473E-11	4.208E-11	2.549E-11	1.288E-11	7.799E-12	5.229E-12	3.747E-12	2.813E-12	2.187E-12	1.747E-12	1.426E-12
WNW	1.402E-10	6.229E-11	3.773E-11	1.907E-11	1.154E-11	7.739E-12	5.546E-12	4.164E-12	3.238E-12	2.586E-12	2.111E-12
NW	3.277E-10	1.456E-10	8.818E-11	4.457E-11	2.698E-11	1.809E-11	1.296E-11	9.732E-12	7.567E-12	6.044E-12	4.934E-12
NNW	4.497E-10	1.998E-10	1.210E-10	6.116E-11	3.702E-11	2.482E-11	1.778E-11	1.335E-11	1.038E-11	8.294E-12	6.770E-12
N	7.362E-10	3.270E-10	1.981E-10	1.001E-10	6.060E-11	4.063E-11	2.912E-11	2.186E-11	1.700E-11	1.358E-11	1.108E-11
NNE	3.441E-10	1.529E-10	9.260E-11	4.681E-11	2.833E-11	1.899E-11	1.361E-11	1.022E-11	7.946E-12	6.348E-12	5.181E-12
NE	1.600E-10	7.106E-11	4.304E-11	2.176E-11	1.317E-11	8.829E-12	6.327E-12	4.751E-12	3.694E-12	2.951E-12	2.408E-12
ENE	1.168E-10	5.188E-11	3.143E-11	1.589E-11	9.615E-12	6.446E-12	4.619E-12	3.468E-12	2.697E-12	2.154E-12	1.758E-12
E	1.133E-10	5.034E-11	3.049E-11	1.541E-11	9.328E-12	6.254E-12	4.481E-12	3.365E-12	2.616E-12	2.090E-12	1.706E-12
ESE	1.794E-10	7.969E-11	4.827E-11	2.440E-11	1.477E-11	9.901E-12	7.095E-12	5.327E-12	4.142E-12	3.309E-12	2.701E-12
SE	3.245E-10	1.442E-10	8.733E-11	4.414E-11	2.672E-11	1.791E-11	1.283E-11	9.638E-12	7.493E-12	5.986E-12	4.886E-12
SSE	3.871E-10	1.719E-10	1.042E-10	5.265E-11	3.186E-11	2.136E-11	1.531E-11	1.150E-11	8.938E-12	7.140E-12	5.827E-12

********** RELATIVE DEPOSITION PER UNIT AREA (M**-2) BY DOWNWIND SECTORS **********

DIRECTION FROM SITE	SEGMENT BOUNDARIES IN MILES .5-1	1-2	2-3	3-4	4-5	5-10	10-20	20-30	30-40	40-50
S	4.220E-08	8.644E-09	2.256E-09	1.013E-09	5.733E-10	2.205E-10	6.378E-11	2.528E-11	1.350E-11	8.356E-12
SSW	1.553E-08	3.182E-09	8.307E-10	3.731E-10	2.110E-10	8.116E-11	2.348E-11	9.306E-12	4.969E-12	3.076E-12
SW	9.784E-09	2.004E-09	5.232E-10	2.350E-10	1.329E-10	5.112E-11	1.479E-11	5.861E-12	3.130E-12	1.937E-12
WSW	9.197E-09	1.884E-09	4.918E-10	2.209E-10	1.250E-10	4.805E-11	1.390E-11	5.509E-12	2.942E-12	1.821E-12
W	8.883E-09	1.819E-09	4.750E-10	2.133E-10	1.207E-10	4.641E-11	1.343E-11	5.321E-12	2.842E-12	1.759E-12
WNW	1.315E-08	2.693E-09	7.030E-10	3.158E-10	1.786E-10	6.869E-11	1.987E-11	7.876E-12	4.206E-12	2.603E-12
NW	3.073E-08	6.294E-09	1.643E-09	7.379E-10	4.175E-10	1.605E-10	4.644E-11	1.841E-11	9.830E-12	6.084E-12
NNW	4.216E-08	8.636E-09	2.255E-09	1.013E-09	5.728E-10	2.203E-10	6.373E-11	2.526E-11	1.349E-11	8.349E-12
N	6.903E-08	1.414E-08	3.691E-09	1.658E-09	9.378E-10	3.607E-10	1.043E-10	4.135E-11	2.208E-11	1.367E-11
NNE	3.227E-08	6.610E-09	1.725E-09	7.749E-10	4.384E-10	1.686E-10	4.877E-11	1.933E-11	1.032E-11	6.389E-12
NE	1.500E-08	3.072E-09	8.020E-10	3.602E-10	2.038E-10	7.836E-11	2.267E-11	8.985E-12	4.798E-12	2.970E-12
ENE	1.095E-08	2.243E-09	5.856E-10	2.630E-10	1.488E-10	5.722E-11	1.655E-11	6.560E-12	3.503E-12	2.168E-12
E	1.062E-08	2.176E-09	5.681E-10	2.552E-10	1.443E-10	5.551E-11	1.606E-11	6.365E-12	3.399E-12	2.104E-12
ESE	1.682E-08	3.445E-09	8.994E-10	4.040E-10	2.285E-10	8.788E-11	2.542E-11	1.008E-11	5.381E-12	3.331E-12
SE	3.043E-08	6.233E-09	1.627E-09	7.308E-10	4.134E-10	1.590E-10	4.599E-11	1.823E-11	9.734E-12	6.025E-12
SSE	3.629E-08	7.434E-09	1.941E-09	8.716E-10	4.931E-10	1.896E-10	5.486E-11	2.174E-11	1.161E-11	7.186E-12

VENTS GROUND LEVEL RELEASES - JAN-DEC 2012
CORRECTED USING STANDARD OPEN TERRAIN FACTORS
SPECIFIC POINTS OF INTEREST

RELEASE ID	TYPE OF LOCATION	DIRECTION FROM SITE	DIST. (MI)	X/Q (SEC/M3) NO DECAY UNDEPLETED	X/Q (SEC/M3) 2.26 DAY DECAY UNDEPLETED	X/Q (SEC/M3) 8.0 DAY DECAY DEPLETED	D/Q (PER SQ.METER)
A	Site Boundary	S	.80	7.8E-06	7.8E-06	6.9E-06	3.7E-08
A	Site Boundary	SSW	.82	2.7E-06	2.7E-06	2.4E-06	1.2E-08
A	Site Boundary	SW	.97	1.2E-06	1.2E-06	1.0E-06	5.1E-09
A	Site Boundary	WSW	.93	1.1E-06	1.1E-06	1.0E-06	5.5E-09
A	Site Boundary	W	.91	1.2E-06	1.2E-06	1.1E-06	5.5E-09
A	Site Boundary	WNW	.94	1.5E-06	1.5E-06	1.3E-06	7.6E-09
A	Site Boundary	NW	.81	4.6E-06	4.6E-06	4.1E-06	2.6E-08
A	Site Boundary	NNW	.69	1.4E-05	1.4E-05	1.3E-05	5.0E-08
A	Site Boundary	N	.67	2.3E-05	2.3E-05	2.0E-05	8.4E-08
A	Site Boundary	NNE	.60	1.3E-05	1.3E-05	1.2E-05	4.8E-08
A	Site Boundary	NE	.62	6.4E-06	6.4E-06	5.7E-06	2.1E-08
A	Site Boundary	ENE	.59	5.3E-06	5.3E-06	4.8E-06	1.7E-08
A	Site Boundary	E	.53	5.7E-06	5.7E-06	5.2E-06	2.0E-08
A	Site Boundary	ESE	.54	7.4E-06	7.4E-06	6.7E-06	3.0E-08
A	Site Boundary	SE	.65	9.2E-06	9.2E-06	8.3E-06	4.0E-08
A	Site Boundary	SSE	.81	7.4E-06	7.3E-06	6.5E-06	3.0E-08
A	Nearest Res	SSW	3.00	1.7E-07	1.7E-07	1.3E-07	5.2E-10
A	Nearest Res	SW	1.30	6.0E-07	6.0E-07	5.1E-07	2.4E-09
A	Nearest Res	WSW	1.90	2.2E-07	2.2E-07	1.9E-07	9.0E-10
A	Nearest Res	W	2.90	9.6E-08	9.5E-08	7.6E-08	3.2E-10
A	Nearest Res	WNW	1.70	4.0E-07	3.9E-07	3.3E-07	1.7E-09
A	Nearest Res	NW	.90	3.6E-06	3.6E-06	3.2E-06	2.0E-08
A	Nearest Res	NNW	1.90	1.6E-06	1.6E-06	1.3E-06	4.1E-09
A	Nearest Res	N	3.00	1.0E-06	1.0E-06	8.1E-07	2.3E-09
A	Nearest Res	NNE	1.90	1.2E-06	1.2E-06	1.0E-06	3.2E-09
A	Nearest Res	NE	3.00	2.5E-07	2.5E-07	2.0E-07	5.0E-10
A	Nearest Res	ENE	1.70	5.7E-07	5.7E-07	4.8E-07	1.4E-09
A	Nearest Res	E	2.20	3.1E-07	3.0E-07	2.5E-07	7.3E-10
A	Nearest Res	ESE	2.30	3.8E-07	3.7E-07	3.1E-07	1.0E-09
A	Nearest Res	SE	3.00	3.9E-07	3.8E-07	3.0E-07	1.0E-09
A	Nearest Cow	NNW	3.50	4.9E-07	4.8E-07	3.8E-07	9.9E-10
A	Nearest Garde	SSW	3.00	1.7E-07	1.7E-07	1.3E-07	5.2E-10
A	Nearest Garde	SW	1.30	6.0E-07	6.0E-07	5.1E-07	2.4E-09
A	Nearest Garde	WSW	1.90	2.2E-07	2.2E-07	1.9E-07	9.0E-10
A	Nearest Garde	W	2.90	9.6E-08	9.5E-08	7.6E-08	3.2E-10
A	Nearest Garde	WNW	2.40	1.9E-07	1.9E-07	1.6E-07	7.4E-10
A	Nearest Garde	NW	2.90	2.9E-07	2.8E-07	2.3E-07	1.1E-09
A	Nearest Garde	NNW	2.80	7.4E-07	7.3E-07	5.9E-07	1.7E-09
A	Nearest Garde	ENE	1.70	5.7E-07	5.7E-07	4.8E-07	1.4E-09
A	Nearest Garde	E	2.20	3.1E-07	3.0E-07	2.5E-07	7.3E-10
A	Nearest Garde	ESE	2.30	3.8E-07	3.7E-07	3.1E-07	1.0E-09

Atmospheric Diffusion Estimates

Elevated Releases

January-March 2012

ERP ELEVATED STACK RELEASES - JAN-MAR 2012
NO DECAY, UNDEPLETED
CORRECTED USING STANDARD OPEN TERRAIN FACTORS

ANNUAL AVERAGE CHI/Q (SEC/METER CUBED) DISTANCE IN MILES FROM THE SITE

SECTOR	.250	.500	.750	1.000	1.500	2.000	2.500	3.000	3.500	4.000	4.500
S	2.923E-11	3.283E-09	2.867E-08	5.211E-08	6.351E-08	5.621E-08	4.681E-08	3.881E-08	3.252E-08	3.659E-08	3.895E-08
SSW	3.425E-11	2.716E-09	1.034E-08	1.667E-08	2.092E-08	1.956E-08	1.706E-08	1.990E-08	2.184E-08	1.966E-08	1.790E-08
SW	1.576E-16	1.959E-10	7.883E-09	2.295E-08	4.768E-08	3.433E-08	2.585E-08	2.028E-08	1.644E-08	1.369E-08	1.164E-08
WSW	1.110E-16	1.313E-10	7.051E-09	2.249E-08	5.857E-08	4.253E-08	3.247E-08	2.584E-08	2.123E-08	1.789E-08	1.539E-08
W	2.775E-10	4.027E-08	1.409E-07	1.564E-07	1.235E-07	7.476E-08	5.058E-08	3.688E-08	2.835E-08	2.266E-08	1.865E-08
WNW	9.341E-11	1.002E-08	9.773E-08	1.780E-07	2.133E-07	1.289E-07	8.684E-08	6.568E-08	5.196E-08	4.108E-08	3.351E-08
NW	1.121E-10	7.153E-09	6.917E-08	1.841E-07	3.230E-07	1.912E-07	1.272E-07	9.336E-08	7.202E-08	5.677E-08	4.618E-08
NNW	2.469E-09	1.913E-08	5.014E-08	7.832E-08	1.068E-07	1.047E-07	1.011E-07	9.584E-08	9.158E-08	7.301E-08	6.000E-08
N	2.561E-08	6.003E-08	7.847E-08	7.838E-08	7.236E-08	6.272E-08	5.298E-08	4.403E-08	3.714E-08	3.182E-08	2.764E-08
NNE	1.157E-08	3.724E-08	5.147E-08	5.149E-08	4.813E-08	4.135E-08	3.484E-08	2.952E-08	2.533E-08	2.203E-08	1.942E-08
NE	2.279E-09	1.469E-08	2.706E-08	3.384E-08	3.771E-08	3.427E-08	2.954E-08	2.527E-08	2.176E-08	1.893E-08	1.667E-08
ENE	1.594E-08	2.626E-08	2.908E-08	2.766E-08	2.519E-08	2.127E-08	1.768E-08	1.483E-08	1.262E-08	1.091E-08	9.561E-09
E	6.347E-11	4.551E-09	1.486E-08	2.160E-08	2.487E-08	2.255E-08	1.941E-08	1.664E-08	1.439E-08	1.258E-08	1.113E-08
ESE	1.235E-15	9.205E-10	1.401E-08	2.666E-08	3.369E-08	3.064E-08	2.613E-08	2.215E-08	1.894E-08	1.641E-08	1.440E-08
SE	3.502E-15	2.294E-09	3.370E-08	6.322E-08	7.895E-08	7.129E-08	6.036E-08	5.071E-08	4.296E-08	3.682E-08	3.196E-08
SSE	1.420E-10	8.886E-09	3.559E-08	5.492E-08	6.187E-08	5.337E-08	4.383E-08	3.602E-08	2.997E-08	2.533E-08	2.173E-08

ANNUAL AVERAGE CHI/Q (SEC/METER CUBED) DISTANCE IN MILES FROM THE SITE

SECTOR	5.000	7.500	10.000	15.000	20.000	25.000	30.000	35.000	40.000	45.000	50.000
S	3.449E-08	2.286E-08	1.480E-08	8.441E-09	5.897E-09	4.441E-09	3.450E-09	2.790E-09	2.339E-09	2.000E-09	1.731E-09
SSW	1.714E-08	1.538E-08	1.014E-08	5.940E-09	4.356E-09	3.315E-09	2.600E-09	2.120E-09	1.779E-09	1.524E-09	1.328E-09
SW	1.105E-08	8.905E-09	5.905E-09	3.474E-09	2.487E-09	1.904E-09	1.527E-09	1.243E-09	1.041E-09	8.901E-10	7.744E-10
WSW	1.465E-08	1.258E-08	9.969E-09	6.811E-09	4.694E-09	3.523E-09	2.791E-09	2.292E-09	1.933E-09	1.665E-09	1.458E-09
W	1.572E-08	8.566E-09	6.244E-09	4.276E-09	3.321E-09	2.478E-09	1.939E-09	1.578E-09	1.321E-09	1.130E-09	9.831E-10
WNW	2.829E-08	1.554E-08	1.044E-08	6.244E-09	4.248E-09	3.153E-09	2.480E-09	2.018E-09	1.683E-09	1.433E-09	1.241E-09
NW	3.885E-08	2.097E-08	1.393E-08	8.151E-09	5.450E-09	3.997E-09	3.131E-09	2.535E-09	2.109E-09	1.794E-09	1.553E-09
NNW	5.193E-08	3.107E-08	2.047E-08	1.199E-08	8.237E-09	6.164E-09	4.931E-09	4.083E-09	3.513E-09	3.044E-09	2.656E-09
N	2.437E-08	1.526E-08	1.246E-08	9.736E-09	8.020E-09	6.536E-09	5.133E-09	4.175E-09	3.488E-09	2.978E-09	2.587E-09
NNE	2.224E-08	4.230E-08	2.775E-08	1.619E-08	1.110E-08	8.302E-09	6.556E-09	5.374E-09	4.527E-09	3.893E-09	3.403E-09
NE	1.867E-08	3.582E-08	2.352E-08	1.374E-08	9.426E-09	7.051E-09	5.648E-09	4.672E-09	3.965E-09	3.407E-09	2.977E-09
ENE	1.040E-08	2.143E-08	1.449E-08	8.759E-09	6.134E-09	4.656E-09	3.968E-09	3.410E-09	2.880E-09	2.483E-09	2.175E-09
E	1.240E-08	2.052E-08	1.362E-08	8.042E-09	5.542E-09	4.155E-09	3.286E-09	2.696E-09	2.344E-09	2.059E-09	1.796E-09
ESE	1.525E-08	2.218E-08	1.495E-08	8.978E-09	6.246E-09	4.713E-09	3.745E-09	3.084E-09	2.607E-09	2.248E-09	1.969E-09
SE	2.805E-08	1.715E-08	1.311E-08	9.245E-09	6.740E-09	5.312E-09	4.400E-09	3.766E-09	3.160E-09	2.707E-09	2.358E-09
SSE	2.209E-08	2.443E-08	1.572E-08	8.925E-09	6.002E-09	4.423E-09	3.451E-09	2.801E-09	2.340E-09	1.998E-09	1.735E-09

CHI/Q (SEC/METER CUBED) FOR EACH SEGMENT

SEGMENT BOUNDARIES IN MILES FROM THE SITE

DIRECTION FROM SITE	.5-1	1-2	2-3	3-4	4-5	5-10	10-20	20-30	30-40	40-50
S	3.345E-08	5.773E-08	4.612E-08	3.587E-08	3.660E-08	2.186E-08	8.723E-09	4.433E-09	2.807E-09	2.001E-09
SSW	1.146E-08	1.937E-08	1.886E-08	2.045E-08	1.814E-08	1.344E-08	6.170E-09	3.307E-09	2.127E-09	1.527E-09
SW	1.287E-08	3.625E-08	2.588E-08	1.649E-08	1.203E-08	8.048E-09	3.576E-09	1.909E-09	1.247E-09	8.918E-10
WSW	1.237E-08	4.342E-08	3.250E-08	2.127E-08	1.585E-08	1.188E-08	6.572E-09	3.542E-09	2.298E-09	1.668E-09
W	1.254E-07	1.092E-07	5.154E-08	2.862E-08	1.875E-08	9.123E-09	4.289E-09	2.487E-09	1.583E-09	1.132E-09
WNW	1.139E-07	1.679E-07	8.959E-08	5.174E-08	3.382E-08	1.611E-08	6.289E-09	3.176E-09	2.022E-09	1.436E-09
NW	1.065E-07	2.335E-07	1.307E-07	7.231E-08	4.661E-08	2.182E-08	8.236E-09	4.038E-09	2.543E-09	1.798E-09
NNW	5.577E-08	9.955E-08	9.997E-08	8.572E-08	6.086E-08	3.099E-08	1.221E-08	6.224E-09	4.108E-09	3.039E-09
N	7.433E-08	6.942E-08	5.200E-08	3.708E-08	2.767E-08	1.604E-08	9.577E-09	6.370E-09	4.187E-09	2.984E-09
NNE	4.832E-08	4.586E-08	3.445E-08	2.527E-08	2.124E-08	3.137E-08	1.650E-08	8.350E-09	5.389E-09	3.899E-09
NE	2.733E-08	3.532E-08	2.909E-08	2.168E-08	1.808E-08	2.654E-08	1.400E-08	7.123E-09	4.682E-09	3.413E-09
ENE	2.782E-08	2.400E-08	1.749E-08	1.260E-08	1.027E-08	1.589E-08	8.865E-09	4.775E-09	3.368E-09	2.487E-09
E	1.556E-08	2.311E-08	1.914E-08	1.434E-08	1.203E-08	1.565E-08	8.171E-09	4.177E-09	2.731E-09	2.046E-09
ESE	1.673E-08	3.077E-08	2.574E-08	1.889E-08	1.531E-08	1.743E-08	9.091E-09	4.734E-09	3.091E-09	2.251E-09
SE	3.984E-08	7.205E-08	5.942E-08	4.284E-08	3.195E-08	1.778E-08	8.991E-09	5.328E-09	3.716E-09	2.712E-09
SSE	3.825E-08	5.655E-08	4.325E-08	2.993E-08	2.293E-08	2.004E-08	9.135E-09	4.455E-09	2.811E-09	2.002E-09

ERP ELEVATED STACK RELEASES - JAN-MAR 2012
2.260 DAY DECAY, UNDEPLETED
CORRECTED USING STANDARD OPEN TERRAIN FACTORS

ANNUAL AVERAGE CHI/Q (SEC/METER CUBED) DISTANCE IN MILES FROM THE SITE

SECTOR	.250	.500	.750	1.000	1.500	2.000	2.500	3.000	3.500	4.000	4.500
S	2.922E-11	3.281E-09	2.864E-08	5.204E-08	6.338E-08	5.605E-08	4.664E-08	3.864E-08	3.235E-08	3.636E-08	3.867E-08
SSW	3.423E-11	2.714E-09	1.032E-08	1.664E-08	2.086E-08	1.948E-08	1.697E-08	1.978E-08	2.167E-08	1.949E-08	1.773E-08
SW	1.576E-16	1.958E-10	7.874E-09	2.291E-08	4.756E-08	3.421E-08	2.573E-08	2.017E-08	1.633E-08	1.358E-08	1.154E-08
WSW	1.109E-16	1.312E-10	7.040E-09	2.243E-08	5.831E-08	4.226E-08	3.222E-08	2.559E-08	2.099E-08	1.766E-08	1.517E-08
W	2.774E-10	4.024E-08	1.407E-07	1.562E-07	1.232E-07	7.450E-08	5.035E-08	3.668E-08	2.817E-08	2.249E-08	1.849E-08
WNW	9.338E-11	1.001E-08	9.762E-08	1.777E-07	2.127E-07	1.284E-07	8.642E-08	6.530E-08	5.161E-08	4.076E-08	3.321E-08
NW	1.121E-10	7.150E-09	6.910E-08	1.838E-07	3.222E-07	1.906E-07	1.267E-07	9.291E-08	7.162E-08	5.640E-08	4.584E-08
NNW	2.469E-09	1.912E-08	5.011E-08	7.824E-08	1.066E-07	1.045E-07	1.008E-07	9.537E-08	9.096E-08	7.244E-08	5.946E-08
N	2.561E-08	6.001E-08	7.841E-08	7.831E-08	7.225E-08	6.259E-08	5.284E-08	4.389E-08	3.700E-08	3.167E-08	2.749E-08
NNE	1.157E-08	3.722E-08	5.143E-08	5.143E-08	4.803E-08	4.124E-08	3.472E-08	2.940E-08	2.520E-08	2.191E-08	1.930E-08
NE	2.279E-09	1.468E-08	2.704E-08	3.380E-08	3.761E-08	3.414E-08	2.939E-08	2.511E-08	2.160E-08	1.878E-08	1.651E-08
ENE	1.593E-08	2.624E-08	2.905E-08	2.763E-08	2.514E-08	2.120E-08	1.761E-08	1.476E-08	1.255E-08	1.084E-08	9.492E-09
E	6.346E-11	4.548E-09	1.485E-08	2.157E-08	2.483E-08	2.249E-08	1.935E-08	1.657E-08	1.432E-08	1.251E-08	1.106E-08
ESE	1.234E-15	9.200E-10	1.400E-08	2.663E-08	3.363E-08	3.057E-08	2.606E-08	2.207E-08	1.887E-08	1.633E-08	1.432E-08
SE	3.501E-15	2.293E-09	3.367E-08	6.316E-08	7.882E-08	7.113E-08	6.018E-08	5.054E-08	4.278E-08	3.665E-08	3.178E-08
SSE	1.420E-10	8.883E-09	3.556E-08	5.486E-08	6.176E-08	5.324E-08	4.370E-08	3.588E-08	2.984E-08	2.520E-08	2.160E-08

ANNUAL AVERAGE CHI/Q (SEC/METER CUBED) DISTANCE IN MILES FROM THE SITE

SECTOR	5.000	7.500	10.000	15.000	20.000	25.000	30.000	35.000	40.000	45.000	50.000
S	3.421E-08	2.259E-08	1.456E-08	8.240E-09	5.712E-09	4.269E-09	3.291E-09	2.640E-09	2.197E-09	1.864E-09	1.601E-09
SSW	1.695E-08	1.510E-08	9.899E-09	5.725E-09	4.140E-09	3.108E-09	2.407E-09	1.937E-09	1.605E-09	1.357E-09	1.168E-09
SW	1.094E-08	8.754E-09	5.770E-09	3.354E-09	2.371E-09	1.793E-09	1.420E-09	1.142E-09	9.447E-10	7.984E-10	6.863E-10
WSW	1.441E-08	1.227E-08	9.645E-09	6.478E-09	4.390E-09	3.241E-09	2.524E-09	2.039E-09	1.692E-09	1.434E-09	1.235E-09
W	1.557E-08	8.436E-09	6.107E-09	4.120E-09	3.146E-09	2.314E-09	1.785E-09	1.432E-09	1.182E-09	9.971E-10	8.554E-10
WNW	2.801E-08	1.531E-08	1.023E-08	6.061E-09	4.082E-09	3.000E-09	2.337E-09	1.882E-09	1.554E-09	1.311E-09	1.125E-09
NW	3.853E-08	2.070E-08	1.370E-08	7.947E-09	5.270E-09	3.833E-09	2.977E-09	2.391E-09	1.973E-09	1.665E-09	1.429E-09
NNW	5.140E-08	3.054E-08	2.000E-08	1.157E-08	7.846E-09	5.797E-09	4.576E-09	3.739E-09	3.172E-09	2.711E-09	2.335E-09
N	2.423E-08	1.512E-08	1.230E-08	9.550E-09	7.808E-09	6.317E-09	4.927E-09	3.979E-09	3.302E-09	2.800E-09	2.416E-09
NNE	2.207E-08	4.170E-08	2.722E-08	1.573E-08	1.068E-08	7.910E-09	6.185E-09	5.021E-09	4.188E-09	3.567E-09	3.088E-09
NE	1.848E-08	3.531E-08	2.307E-08	1.335E-08	9.074E-09	6.726E-09	5.338E-09	4.376E-09	3.681E-09	3.135E-09	2.714E-09
ENE	1.032E-08	2.110E-08	1.419E-08	8.489E-09	5.882E-09	4.417E-09	3.723E-09	3.165E-09	2.646E-09	2.257E-09	1.957E-09
E	1.231E-08	2.024E-08	1.338E-08	7.828E-09	5.346E-09	3.972E-09	3.114E-09	2.532E-09	2.182E-09	1.900E-09	1.643E-09
ESE	1.515E-08	2.186E-08	1.466E-08	8.713E-09	5.999E-09	4.480E-09	3.524E-09	2.872E-09	2.403E-09	2.051E-09	1.779E-09
SE	2.788E-08	1.699E-08	1.294E-08	9.049E-09	6.540E-09	5.106E-09	4.187E-09	3.546E-09	2.948E-09	2.502E-09	2.160E-09
SSE	2.194E-08	2.412E-08	1.545E-08	8.690E-09	5.790E-09	4.226E-09	3.267E-09	2.627E-09	2.174E-09	1.838E-09	1.582E-09

CHI/Q (SEC/METER CUBED) FOR EACH SEGMENT
SEGMENT BOUNDARIES IN MILES FROM THE SITE

DIRECTION FROM SITE	.5-1	1-2	2-3	3-4	4-5	5-10	10-20	20-30	30-40	40-50
S	3.341E-08	5.760E-08	4.595E-08	3.568E-08	3.634E-08	2.160E-08	8.522E-09	4.262E-09	2.657E-09	1.865E-09
SSW	1.144E-08	1.931E-08	1.876E-08	2.030E-08	1.796E-08	1.320E-08	5.948E-09	3.103E-09	1.945E-09	1.361E-09
SW	1.285E-08	3.615E-08	2.577E-08	1.638E-08	1.192E-08	7.913E-09	3.454E-09	1.798E-09	1.146E-09	8.002E-10
WSW	1.235E-08	4.320E-08	3.225E-08	2.104E-08	1.563E-08	1.158E-08	6.254E-09	3.261E-09	2.046E-09	1.437E-09
W	1.253E-07	1.089E-07	5.132E-08	2.843E-08	1.859E-08	8.986E-09	4.129E-09	2.325E-09	1.438E-09	9.995E-10
WNW	1.137E-07	1.675E-07	8.917E-08	5.139E-08	3.352E-08	1.588E-08	6.109E-09	3.023E-09	1.887E-09	1.314E-09
NW	1.063E-07	2.329E-07	1.302E-07	7.190E-08	4.627E-08	2.155E-08	8.036E-09	3.874E-09	2.399E-09	1.669E-09
NNW	5.573E-08	9.937E-08	9.960E-08	8.516E-08	6.032E-08	3.049E-08	1.179E-08	5.855E-09	3.762E-09	2.708E-09
N	7.427E-08	6.930E-08	5.186E-08	3.694E-08	2.752E-08	1.589E-08	9.388E-09	6.159E-09	3.992E-09	2.806E-09
NNE	4.827E-08	4.577E-08	3.433E-08	2.515E-08	2.110E-08	3.090E-08	1.604E-08	7.959E-09	5.036E-09	3.574E-09
NE	2.730E-08	3.522E-08	2.895E-08	2.153E-08	1.791E-08	2.613E-08	1.361E-08	6.797E-09	4.386E-09	3.141E-09
ENE	2.779E-08	2.395E-08	1.743E-08	1.253E-08	1.020E-08	1.563E-08	8.597E-09	4.530E-09	3.127E-09	2.261E-09
E	1.555E-08	2.307E-08	1.908E-08	1.427E-08	1.195E-08	1.543E-08	7.958E-09	3.995E-09	2.565E-09	1.888E-09
ESE	1.671E-08	3.072E-08	2.567E-08	1.882E-08	1.522E-08	1.717E-08	8.829E-09	4.503E-09	2.880E-09	2.055E-09
SE	3.981E-08	7.192E-08	5.925E-08	4.266E-08	3.178E-08	1.761E-08	8.799E-09	5.121E-09	3.501E-09	2.507E-09
SSE	3.821E-08	5.644E-08	4.312E-08	2.980E-08	2.280E-08	1.978E-08	8.902E-09	4.260E-09	2.637E-09	1.843E-09

ERP ELEVATED STACK RELEASES - JAN-MAR 2012
8.000 DAY DECAY, DEPLETED
CORRECTED USING STANDARD OPEN TERRAIN FACTORS

ANNUAL AVERAGE CHI/Q (SEC/METER CUBED) DISTANCE IN MILES FROM THE SITE

SECTOR	.250	.500	.750	1.000	1.500	2.000	2.500	3.000	3.500	4.000	4.500
S	2.923E-11	3.268E-09	2.861E-08	5.203E-08	6.287E-08	5.515E-08	4.555E-08	3.748E-08	3.119E-08	3.500E-08	3.722E-08
SSW	3.424E-11	2.695E-09	1.025E-08	1.658E-08	2.068E-08	1.920E-08	1.664E-08	1.937E-08	2.123E-08	1.906E-08	1.732E-08
SW	1.576E-16	1.959E-10	7.880E-09	2.294E-08	4.728E-08	3.385E-08	2.539E-08	1.986E-08	1.606E-08	1.334E-08	1.133E-08
WSW	1.110E-16	1.313E-10	7.048E-09	2.245E-08	5.807E-08	4.197E-08	3.195E-08	2.536E-08	2.080E-08	1.750E-08	1.503E-08
W	2.775E-10	4.001E-08	1.397E-07	1.539E-07	1.201E-07	7.191E-08	4.823E-08	3.492E-08	2.668E-08	2.122E-08	1.739E-08
WNW	9.340E-11	9.977E-09	9.747E-08	1.763E-07	2.094E-07	1.252E-07	8.373E-08	6.298E-08	4.961E-08	3.901E-08	3.163E-08
NW	1.121E-10	7.097E-09	6.887E-08	1.831E-07	3.188E-07	1.872E-07	1.238E-07	9.039E-08	6.945E-08	5.447E-08	4.405E-08
NNW	2.469E-09	1.897E-08	4.956E-08	7.773E-08	1.055E-07	1.029E-07	9.921E-08	9.396E-08	8.980E-08	7.130E-08	5.831E-08
N	2.561E-08	5.950E-08	7.712E-08	7.715E-08	7.107E-08	6.132E-08	5.155E-08	4.264E-08	3.581E-08	3.056E-08	2.645E-08
NNE	1.157E-08	3.691E-08	5.056E-08	5.062E-08	4.723E-08	4.041E-08	3.389E-08	2.859E-08	2.444E-08	2.119E-08	1.862E-08
NE	2.279E-09	1.456E-08	2.669E-08	3.348E-08	3.718E-08	3.358E-08	2.877E-08	2.448E-08	2.098E-08	1.818E-08	1.594E-08
ENE	1.594E-08	2.602E-08	2.856E-08	2.721E-08	2.474E-08	2.077E-08	1.717E-08	1.433E-08	1.214E-08	1.045E-08	9.127E-09
E	6.347E-11	4.515E-09	1.472E-08	2.145E-08	2.458E-08	2.214E-08	1.895E-08	1.617E-08	1.392E-08	1.213E-08	1.070E-08
ESE	1.235E-15	9.204E-10	1.401E-08	2.665E-08	3.339E-08	3.013E-08	2.551E-08	2.149E-08	1.829E-08	1.577E-08	1.378E-08
SE	3.502E-15	2.293E-09	3.369E-08	6.321E-08	7.824E-08	7.008E-08	5.890E-08	4.917E-08	4.141E-08	3.531E-08	3.050E-08
SSE	1.420E-10	8.821E-09	3.534E-08	5.467E-08	6.115E-08	5.229E-08	4.260E-08	3.473E-08	2.870E-08	2.409E-08	2.054E-08

ANNUAL AVERAGE CHI/Q (SEC/METER CUBED) DISTANCE IN MILES FROM THE SITE

SECTOR	5.000	7.500	10.000	15.000	20.000	25.000	30.000	35.000	40.000	45.000	50.000
S	3.285E-08	2.136E-08	1.339E-08	7.168E-09	4.675E-09	3.328E-09	2.475E-09	1.923E-09	1.559E-09	1.293E-09	1.089E-09
SSW	1.657E-08	1.469E-08	9.356E-09	5.099E-09	3.461E-09	2.522E-09	1.906E-09	1.502E-09	1.221E-09	1.016E-09	8.606E-10
SW	1.075E-08	8.552E-09	5.475E-09	2.992E-09	1.967E-09	1.404E-09	1.080E-09	8.489E-10	6.880E-10	5.710E-10	4.828E-10
WSW	1.431E-08	1.208E-08	9.241E-09	5.946E-09	3.907E-09	2.815E-09	2.149E-09	1.707E-09	1.396E-09	1.169E-09	9.955E-10
W	1.459E-08	7.823E-09	5.644E-09	3.679E-09	2.699E-09	1.935E-09	1.461E-09	1.151E-09	9.346E-10	7.773E-10	6.587E-10
WNW	2.655E-08	1.413E-08	9.191E-09	5.146E-09	3.250E-09	2.278E-09	1.721E-09	1.352E-09	1.091E-09	9.012E-10	7.588E-10
NW	3.685E-08	1.925E-08	1.238E-08	6.803E-09	4.319E-09	3.030E-09	2.287E-09	1.792E-09	1.447E-09	1.197E-09	1.009E-09
NNW	5.022E-08	2.911E-08	1.850E-08	1.005E-08	6.326E-09	4.397E-09	3.301E-09	2.594E-09	2.143E-09	1.796E-09	1.518E-09
N	2.325E-08	1.439E-08	1.171E-08	9.150E-09	7.367E-09	5.729E-09	4.363E-09	3.452E-09	2.811E-09	2.345E-09	1.992E-09
NNE	2.140E-08	4.093E-08	2.592E-08	1.421E-08	9.178E-09	6.524E-09	4.927E-09	3.881E-09	3.151E-09	2.620E-09	2.219E-09
NE	1.789E-08	3.459E-08	2.193E-08	1.204E-08	7.774E-09	5.528E-09	4.253E-09	3.405E-09	2.805E-09	2.345E-09	1.996E-09
ENE	9.953E-09	2.079E-08	1.357E-08	7.631E-09	4.908E-09	3.468E-09	2.773E-09	2.272E-09	1.849E-09	1.541E-09	1.307E-09
E	1.194E-08	1.989E-08	1.276E-08	7.008E-09	4.442E-09	3.104E-09	2.308E-09	1.792E-09	1.480E-09	1.244E-09	1.048E-09
ESE	1.460E-08	2.142E-08	1.397E-08	7.821E-09	5.018E-09	3.536E-09	2.645E-09	2.064E-09	1.660E-09	1.367E-09	1.147E-09
SE	2.666E-08	1.603E-08	1.216E-08	8.497E-09	6.145E-09	4.817E-09	3.975E-09	3.379E-09	2.768E-09	2.320E-09	1.980E-09
SSE	2.082E-08	2.300E-08	1.429E-08	7.645E-09	4.862E-09	3.416E-09	2.555E-09	1.996E-09	1.610E-09	1.331E-09	1.121E-09

CHI/Q (SEC/METER CUBED) FOR EACH SEGMENT
SEGMENT BOUNDARIES IN MILES FROM THE SITE

DIRECTION FROM SITE	.5-1	1-2	2-3	3-4	4-5	5-10	10-20	20-30	30-40	40-50
S	3.339E-08	5.703E-08	4.488E-08	3.444E-08	3.494E-08	2.037E-08	7.442E-09	3.346E-09	1.942E-09	1.296E-09
SSW	1.138E-08	1.911E-08	1.841E-08	1.987E-08	1.756E-08	1.274E-08	5.317E-09	2.526E-09	1.510E-09	1.019E-09
SW	1.287E-08	3.590E-08	2.543E-08	1.611E-08	1.171E-08	7.673E-09	3.088E-09	1.425E-09	8.537E-10	5.730E-10
WSW	1.236E-08	4.300E-08	3.199E-08	2.085E-08	1.550E-08	1.131E-08	5.772E-09	2.840E-09	1.715E-09	1.172E-09
W	1.239E-07	1.062E-07	4.922E-08	2.695E-08	1.749E-08	8.358E-09	3.680E-09	1.949E-09	1.157E-09	7.800E-10
WNW	1.131E-07	1.646E-07	8.650E-08	4.939E-08	3.193E-08	1.470E-08	5.203E-09	2.314E-09	1.358E-09	9.047E-10
NW	1.059E-07	2.301E-07	1.273E-07	6.973E-08	4.447E-08	2.011E-08	6.938E-09	3.076E-09	1.802E-09	1.201E-09
NNW	5.528E-08	9.818E-08	9.810E-08	8.394E-08	5.916E-08	2.909E-08	1.027E-08	4.473E-09	2.624E-09	1.796E-09
N	7.322E-08	6.809E-08	5.059E-08	3.576E-08	2.648E-08	1.517E-08	8.926E-09	5.619E-09	3.468E-09	2.352E-09
NNE	4.755E-08	4.495E-08	3.351E-08	2.439E-08	2.041E-08	2.992E-08	1.458E-08	6.593E-09	3.902E-09	2.629E-09
NE	2.701E-08	3.476E-08	2.834E-08	2.091E-08	1.733E-08	2.525E-08	1.234E-08	5.617E-09	3.419E-09	2.352E-09
ENE	2.740E-08	2.352E-08	1.699E-08	1.212E-08	9.824E-09	1.517E-08	7.742E-09	3.574E-09	2.254E-09	1.545E-09
E	1.544E-08	2.280E-08	1.869E-08	1.388E-08	1.158E-08	1.495E-08	7.145E-09	3.142E-09	1.821E-09	1.242E-09
ESE	1.672E-08	3.044E-08	2.514E-08	1.824E-08	1.467E-08	1.659E-08	7.940E-09	3.575E-09	2.076E-09	1.372E-09
SE	3.983E-08	7.127E-08	5.799E-08	4.131E-08	3.051E-08	1.667E-08	8.265E-09	4.834E-09	3.316E-09	2.327E-09
SSE	3.804E-08	5.577E-08	4.204E-08	2.867E-08	2.170E-08	1.865E-08	7.886E-09	3.457E-09	2.009E-09	1.336E-09

ERP ELEVATED STACK RELEASES - JAN-MAR 2012
CORRECTED USING STANDARD OPEN TERRAIN FACTORS

********** RELATIVE DEPOSITION PER UNIT AREA (M**-2) AT FIXED POINTS BY DOWNWIND SECTORS **********

DIRECTION FROM SITE	.25	.50	.75	1.00	1.50	2.00	2.50	3.00	3.50	4.00	4.50
					DISTANCES IN MILES						
S	4.039E-10	1.066E-09	1.997E-09	2.006E-09	1.236E-09	8.254E-10	5.819E-10	4.270E-10	3.233E-10	2.635E-10	2.423E-10
SSW	2.913E-10	3.905E-10	5.590E-10	5.166E-10	3.057E-10	2.015E-10	1.412E-10	1.033E-10	9.760E-11	7.382E-11	5.777E-11
SW	1.589E-11	9.534E-11	2.030E-10	2.103E-10	2.612E-10	1.421E-10	8.789E-11	5.959E-11	4.302E-11	3.251E-11	2.543E-11
WSW	1.192E-11	7.151E-11	1.523E-10	3.296E-10	1.954E-10	1.063E-10	6.574E-11	4.457E-11	3.218E-11	2.432E-11	1.903E-11
W	3.217E-10	3.774E-09	3.540E-09	2.293E-09	1.265E-09	6.549E-10	3.930E-10	2.602E-10	1.842E-10	1.370E-10	1.060E-10
WNW	3.297E-10	6.209E-10	3.659E-09	2.523E-09	1.635E-09	8.190E-10	4.841E-10	3.209E-10	2.334E-10	1.784E-10	1.438E-10
NW	1.117E-09	1.276E-09	1.627E-09	3.320E-09	2.156E-09	1.076E-09	6.387E-10	4.269E-10	3.122E-10	2.450E-10	2.036E-10
NNW	2.412E-09	2.259E-09	2.358E-09	1.881E-09	1.862E-09	1.006E-09	6.208E-10	5.087E-10	3.727E-10	2.921E-10	2.424E-10
N	7.609E-09	6.294E-09	5.503E-09	3.889E-09	1.936E-09	1.199E-09	8.144E-10	5.864E-10	4.397E-10	3.399E-10	2.691E-10
NNE	4.184E-09	3.387E-09	2.854E-09	1.957E-09	9.504E-10	5.824E-10	3.935E-10	2.826E-10	2.116E-10	1.635E-10	1.294E-10
NE	2.120E-09	1.860E-09	1.782E-09	1.347E-09	7.051E-10	4.453E-10	3.056E-10	2.213E-10	1.664E-10	1.287E-10	1.019E-10
ENE	2.103E-09	1.757E-09	1.563E-09	1.119E-09	5.628E-10	3.499E-10	2.382E-10	1.718E-10	1.289E-10	9.964E-11	7.889E-11
E	5.720E-10	7.173E-10	9.828E-10	8.930E-10	5.238E-10	3.444E-10	2.410E-10	1.762E-10	1.332E-10	1.033E-10	8.177E-11
ESE	8.608E-11	5.164E-10	1.100E-09	1.139E-09	7.115E-10	4.770E-10	3.370E-10	2.475E-10	1.875E-10	1.455E-10	1.152E-10
SE	2.278E-10	1.367E-09	2.910E-09	3.014E-09	1.883E-09	1.262E-09	8.917E-10	6.550E-10	4.961E-10	3.850E-10	3.049E-10
SSE	1.716E-09	2.152E-09	2.948E-09	2.679E-09	1.571E-09	1.033E-09	7.230E-10	5.287E-10	3.995E-10	3.098E-10	2.453E-10

DIRECTION FROM SITE	5.00	7.50	10.00	15.00	20.00	25.00	30.00	35.00	40.00	45.00	50.00
					DISTANCES IN MILES						
S	1.948E-10	1.244E-10	8.250E-11	4.646E-11	2.907E-11	2.237E-11	1.599E-11	1.197E-11	9.507E-12	7.579E-12	6.186E-12
SSW	4.677E-11	4.842E-11	3.575E-11	2.204E-11	1.260E-11	8.695E-12	6.231E-12	4.679E-12	3.663E-12	2.926E-12	2.388E-12
SW	2.045E-11	2.937E-11	2.266E-11	1.441E-11	9.276E-12	5.579E-12	3.759E-12	2.823E-12	2.195E-12	1.753E-12	1.431E-12
WSW	1.541E-11	2.214E-11	1.710E-11	9.862E-12	5.968E-12	4.002E-12	2.907E-12	2.183E-12	1.697E-12	1.356E-12	1.107E-12
W	8.488E-11	3.792E-11	3.159E-11	1.791E-11	1.331E-11	8.976E-12	6.432E-12	4.830E-12	3.755E-12	3.000E-12	2.448E-12
WNW	1.226E-10	6.988E-11	4.845E-11	2.841E-11	1.785E-11	1.275E-11	8.986E-12	6.749E-12	5.296E-12	4.230E-12	3.453E-12
NW	1.778E-10	1.111E-10	8.057E-11	4.892E-11	2.967E-11	1.988E-11	1.443E-11	1.083E-11	8.471E-12	6.767E-12	5.523E-12
NNW	2.113E-10	1.314E-10	9.514E-11	5.788E-11	3.703E-11	2.465E-11	1.753E-11	1.284E-11	9.828E-12	7.851E-12	6.408E-12
N	2.173E-10	1.035E-10	6.355E-11	3.396E-11	6.680E-11	4.246E-11	3.037E-11	2.280E-11	1.773E-11	1.416E-11	1.156E-11
NNE	1.045E-10	1.983E-10	1.228E-10	6.369E-11	3.886E-11	2.600E-11	1.857E-11	1.389E-11	1.077E-11	8.580E-12	6.988E-12
NE	8.224E-11	1.700E-10	1.057E-10	5.507E-11	3.364E-11	2.250E-11	1.582E-11	1.179E-11	9.167E-12	7.382E-12	6.025E-12
ENE	6.368E-11	8.390E-11	6.275E-11	3.916E-11	2.523E-11	1.680E-11	1.185E-11	7.918E-12	6.156E-12	4.918E-12	4.015E-12
E	6.589E-11	9.131E-11	6.844E-11	4.268E-11	2.738E-11	1.813E-11	1.271E-11	9.303E-12	7.077E-12	5.484E-12	4.463E-12
ESE	9.281E-11	1.114E-10	8.145E-11	4.981E-11	3.177E-11	2.103E-11	1.476E-11	1.081E-11	8.237E-12	6.469E-12	5.205E-12
SE	2.456E-10	1.163E-10	7.086E-11	3.722E-11	2.264E-11	1.554E-11	1.160E-11	2.332E-11	1.787E-11	1.412E-11	1.143E-11
SSE	1.977E-10	1.988E-10	1.212E-10	6.179E-11	3.750E-11	2.513E-11	1.799E-11	1.349E-11	1.049E-11	8.373E-12	6.832E-12

********** RELATIVE DEPOSITION PER UNIT AREA (M**-2) BY DOWNWIND SECTORS **********

DIRECTION FROM SITE	.5-1	1-2	2-3	3-4	4-5	5-10	10-20	20-30	30-40	40-50
					SEGMENT BOUNDARIES IN MILES					
S	1.794E-09	1.225E-09	5.849E-10	3.302E-10	2.310E-10	1.214E-10	4.674E-11	2.160E-11	1.218E-11	7.634E-12
SSW	5.027E-10	3.063E-10	1.422E-10	9.018E-11	5.845E-11	4.242E-11	2.089E-11	8.751E-12	4.735E-12	2.945E-12
SW	1.823E-10	1.969E-10	9.102E-11	4.375E-11	2.568E-11	2.440E-11	1.396E-11	5.837E-12	2.851E-12	1.765E-12
WSW	2.131E-10	1.856E-10	6.808E-11	3.273E-11	1.925E-11	1.840E-11	9.740E-12	4.088E-12	2.205E-12	1.365E-12
W	3.038E-09	1.222E-09	4.097E-10	1.880E-10	1.074E-10	4.554E-11	1.891E-11	9.114E-12	4.878E-12	3.019E-12
WNW	2.479E-09	1.470E-09	5.081E-10	2.374E-10	1.462E-10	7.207E-11	2.817E-11	1.261E-11	6.834E-12	4.258E-12
NW	2.301E-09	1.935E-09	6.706E-10	3.194E-10	2.063E-10	1.123E-10	4.740E-11	2.031E-11	1.096E-11	6.811E-12
NNW	2.124E-09	1.486E-09	6.787E-10	3.809E-10	2.456E-10	1.330E-10	5.689E-11	2.510E-11	1.303E-11	7.902E-12
N	4.962E-09	2.042E-09	8.257E-10	4.436E-10	2.709E-10	1.110E-10	5.513E-11	4.411E-11	2.303E-11	1.426E-11
NNE	2.574E-09	1.011E-09	3.995E-10	2.135E-10	1.303E-10	1.439E-10	6.578E-11	2.646E-11	1.404E-11	8.639E-12
NE	1.606E-09	7.322E-10	3.091E-10	1.677E-10	1.026E-10	1.219E-10	5.679E-11	2.280E-11	1.194E-11	7.408E-12
ENE	1.409E-09	5.917E-10	2.414E-10	1.300E-10	7.940E-11	7.001E-11	3.821E-11	1.707E-11	8.369E-12	4.950E-12
E	8.839E-10	5.261E-10	2.427E-10	1.341E-10	8.226E-11	7.550E-11	4.160E-11	1.843E-11	9.429E-12	5.578E-12
ESE	9.876E-10	7.023E-10	3.385E-10	1.886E-10	1.159E-10	9.395E-11	4.882E-11	2.138E-11	1.096E-11	6.525E-12
SE	2.613E-09	1.858E-09	8.958E-10	4.992E-10	3.067E-10	1.248E-10	3.821E-11	1.585E-11	1.789E-11	1.423E-11
SSE	2.652E-09	1.578E-09	7.280E-10	4.022E-10	2.468E-10	1.641E-10	6.420E-11	2.557E-11	1.363E-11	8.428E-12

ERP ELEVATED STACK RELEASES - JAN-MAR 2012
CORRECTED USING STANDARD OPEN TERRAIN FACTORS
SPECIFIC POINTS OF INTEREST

RELEASE ID	TYPE OF LOCATION	DIRECTION FROM SITE	DIST. (MI)	X/Q (SEC/M3) NO DECAY UNDEPLETED	X/Q (SEC/M3) 2.26 DAY DECAY UNDEPLETED	X/Q (SEC/M3) 8.0 DAY DECAY DEPLETED	D/Q (PER SQ.METER)
A	Site Boundary	S	.80	3.4E-08	3.4E-08	3.4E-08	2.1E-09
A	Site Boundary	SSW	.82	1.3E-08	1.3E-08	1.2E-08	5.7E-10
A	Site Boundary	SW	.97	2.1E-08	2.1E-08	2.1E-08	2.2E-10
A	Site Boundary	WSW	.93	1.8E-08	1.8E-08	1.8E-08	2.4E-10
A	Site Boundary	W	.91	1.6E-07	1.6E-07	1.5E-07	2.6E-09
A	Site Boundary	WNW	.94	1.6E-07	1.6E-07	1.6E-07	2.8E-09
A	Site Boundary	NW	.81	9.6E-08	9.6E-08	9.6E-08	1.6E-09
A	Site Boundary	NNW	.69	4.0E-08	4.0E-08	3.9E-08	2.3E-09
A	Site Boundary	N	.67	7.2E-08	7.2E-08	7.1E-08	5.7E-09
A	Site Boundary	NNE	.60	4.3E-08	4.3E-08	4.2E-08	3.1E-09
A	Site Boundary	NE	.62	2.0E-08	2.0E-08	2.0E-08	1.8E-09
A	Site Boundary	ENE	.59	2.6E-08	2.6E-08	2.6E-08	1.7E-09
A	Site Boundary	E	.53	5.3E-09	5.3E-09	5.2E-09	7.4E-10
A	Site Boundary	ESE	.54	1.8E-09	1.8E-09	1.8E-09	6.0E-10
A	Site Boundary	SE	.65	1.7E-08	1.7E-08	1.7E-08	2.3E-09
A	Site Boundary	SSE	.81	4.2E-08	4.2E-08	4.1E-08	3.0E-09
A	Nearest Res	SSW	3.00	2.0E-08	2.0E-08	1.9E-08	1.0E-10
A	Nearest Res	SW	1.30	4.0E-08	4.0E-08	4.0E-08	3.5E-10
A	Nearest Res	WSW	1.90	4.5E-08	4.5E-08	4.5E-08	1.2E-10
A	Nearest Res	W	2.90	3.9E-08	3.9E-08	3.7E-08	2.8E-10
A	Nearest Res	WNW	1.70	1.7E-07	1.7E-07	1.7E-07	1.2E-09
A	Nearest Res	NW	.90	1.4E-07	1.4E-07	1.4E-07	3.7E-09
A	Nearest Res	NNW	1.90	1.1E-07	1.1E-07	1.0E-07	1.1E-09
A	Nearest Res	N	3.00	4.4E-08	4.4E-08	4.3E-08	5.9E-10
A	Nearest Res	NNE	1.90	4.3E-08	4.3E-08	4.2E-08	6.4E-10
A	Nearest Res	NE	3.00	2.5E-08	2.5E-08	2.4E-08	2.2E-10
A	Nearest Res	ENE	1.70	2.4E-08	2.4E-08	2.3E-08	4.5E-10
A	Nearest Res	E	2.20	2.1E-08	2.1E-08	2.1E-08	3.0E-10
A	Nearest Res	ESE	2.30	2.8E-08	2.8E-08	2.7E-08	3.9E-10
A	Nearest Res	SE	3.00	5.1E-08	5.1E-08	4.9E-08	6.6E-10
A	Nearest Cow	NNW	3.50	9.2E-08	9.1E-08	9.0E-08	3.7E-10
A	Nearest Garde	SSW	3.00	2.0E-08	2.0E-08	1.9E-08	1.0E-10
A	Nearest Garde	SW	1.30	4.0E-08	4.0E-08	4.0E-08	3.5E-10
A	Nearest Garde	WSW	1.90	4.5E-08	4.5E-08	4.5E-08	1.2E-10
A	Nearest Garde	W	2.90	3.9E-08	3.9E-08	3.7E-08	2.8E-10
A	Nearest Garde	WNW	2.40	9.3E-08	9.3E-08	9.0E-08	5.3E-10
A	Nearest Garde	NW	2.90	9.9E-08	9.8E-08	9.6E-08	4.6E-10
A	Nearest Garde	NNW	2.80	9.8E-08	9.7E-08	9.6E-08	5.8E-10
A	Nearest Garde	ENE	1.70	2.4E-08	2.4E-08	2.3E-08	4.5E-10
A	Nearest Garde	E	2.20	2.1E-08	2.1E-08	2.1E-08	3.0E-10
A	Nearest Garde	ESE	2.30	2.8E-08	2.8E-08	2.7E-08	3.9E-10
A	MAXIMUM CHI/Q	S	1.50	6.4E-08	6.3E-08	6.3E-08	1.2E-09
A	MAXIMUM CHI/Q	SSW	3.50	2.2E-08	2.2E-08	2.1E-08	9.8E-11
A	MAXIMUM CHI/Q	SW	1.50	4.8E-08	4.8E-08	4.7E-08	2.6E-10
A	MAXIMUM CHI/Q	WSW	1.50	5.9E-08	5.8E-08	5.8E-08	2.0E-10
A	MAXIMUM CHI/Q	W	1.00	1.6E-07	1.6E-07	1.5E-07	2.3E-09
A	MAXIMUM CHI/Q	WNW	1.50	2.1E-07	2.1E-07	2.1E-07	1.6E-09
A	MAXIMUM CHI/Q	NW	1.50	3.2E-07	3.2E-07	3.2E-07	2.2E-09
A	MAXIMUM CHI/Q	NNW	1.50	1.1E-07	1.1E-07	1.1E-07	1.9E-09
A	MAXIMUM CHI/Q	N	.75	7.8E-08	7.8E-08	7.7E-08	5.5E-09
A	MAXIMUM CHI/Q	NNE	1.00	5.1E-08	5.1E-08	5.1E-08	2.0E-09
A	MAXIMUM CHI/Q	NE	1.50	3.8E-08	3.8E-08	3.7E-08	7.1E-10
A	MAXIMUM CHI/Q	ENE	.75	2.9E-08	2.9E-08	2.8E-08	1.6E-09
A	MAXIMUM CHI/Q	E	1.50	2.5E-08	2.5E-08	2.5E-08	5.2E-10
A	MAXIMUM CHI/Q	ESE	1.50	3.4E-08	3.4E-08	3.3E-08	7.1E-10
A	MAXIMUM CHI/Q	SE	1.50	7.9E-08	7.9E-08	7.8E-08	1.9E-09

Atmospheric Diffusion Estimates

Elevated Releases

April-June 2012

ERP ELEVATED STACK RELEASES - APR-JUN 2012
NO DECAY, UNDEPLETED
CORRECTED USING STANDARD OPEN TERRAIN FACTORS

ANNUAL AVERAGE CHI/Q (SEC/METER CUBED) DISTANCE IN MILES FROM THE SITE

SECTOR	.250	.500	.750	1.000	1.500	2.000	2.500	3.000	3.500	4.000	4.500
S	2.857E-10	1.905E-08	4.830E-08	6.222E-08	6.545E-08	5.639E-08	4.667E-08	3.868E-08	3.245E-08	3.728E-08	4.119E-08
SSW	6.627E-11	6.665E-09	2.330E-08	3.550E-08	4.354E-08	4.078E-08	3.568E-08	4.165E-08	4.433E-08	3.893E-08	3.446E-08
SW	3.203E-11	4.319E-09	3.727E-08	8.265E-08	1.218E-07	8.064E-08	5.739E-08	4.320E-08	3.394E-08	2.754E-08	2.293E-08
WSW	9.291E-11	6.858E-09	5.312E-08	1.179E-07	1.636E-07	9.922E-08	6.690E-08	4.853E-08	3.710E-08	2.948E-08	2.414E-08
W	8.100E-10	5.799E-08	1.962E-07	2.295E-07	1.897E-07	1.140E-07	7.618E-08	5.480E-08	4.156E-08	3.279E-08	2.666E-08
WNW	2.780E-10	1.958E-08	9.543E-08	1.483E-07	1.769E-07	1.097E-07	7.562E-08	5.930E-08	4.852E-08	3.891E-08	3.212E-08
NW	3.599E-08	1.048E-07	1.966E-07	2.787E-07	3.969E-07	2.326E-07	1.542E-07	1.134E-07	8.775E-08	6.927E-08	5.644E-08
NNW	6.715E-08	1.399E-07	1.619E-07	1.603E-07	1.737E-07	1.603E-07	1.452E-07	1.273E-07	1.109E-07	8.703E-08	7.057E-08
N	2.135E-07	2.342E-07	2.040E-07	1.471E-07	9.937E-08	7.631E-08	6.102E-08	4.932E-08	4.088E-08	3.460E-08	2.979E-08
NNE	1.856E-08	4.935E-08	6.418E-08	5.798E-08	4.771E-08	3.852E-08	3.130E-08	2.588E-08	2.181E-08	1.871E-08	1.631E-08
NE	1.564E-10	1.058E-08	2.644E-08	3.388E-08	3.584E-08	3.119E-08	2.607E-08	2.180E-08	1.843E-08	1.580E-08	1.373E-08
ENE	1.171E-10	7.170E-09	1.620E-08	2.016E-08	2.133E-08	1.856E-08	1.544E-08	1.283E-08	1.078E-08	9.186E-09	7.936E-09
E	2.707E-16	1.999E-10	3.237E-09	6.733E-09	1.008E-08	1.028E-08	9.446E-09	8.405E-09	7.426E-09	6.576E-09	5.858E-09
ESE	1.513E-10	8.266E-09	1.871E-08	2.331E-08	2.465E-08	2.143E-08	1.782E-08	1.479E-08	1.240E-08	1.054E-08	9.080E-09
SE	8.768E-11	5.789E-09	2.068E-08	3.077E-08	3.459E-08	3.029E-08	2.527E-08	2.104E-08	1.771E-08	1.511E-08	1.306E-08
SSE	3.902E-10	2.315E-08	5.552E-08	6.858E-08	6.861E-08	5.747E-08	4.672E-08	3.823E-08	3.178E-08	2.685E-08	2.305E-08

ANNUAL AVERAGE CHI/Q (SEC/METER CUBED) DISTANCE IN MILES FROM THE SITE

SECTOR	5.000	7.500	10.000	15.000	20.000	25.000	30.000	35.000	40.000	45.000	50.000
S	3.715E-08	2.803E-08	1.852E-08	1.087E-08	7.959E-09	6.200E-09	4.869E-09	3.973E-09	3.380E-09	2.923E-09	2.546E-09
SSW	3.152E-08	2.123E-08	1.363E-08	7.695E-09	5.265E-09	3.877E-09	3.003E-09	2.421E-09	2.011E-09	1.707E-09	1.476E-09
SW	2.080E-08	1.445E-08	9.390E-09	5.380E-09	3.745E-09	2.814E-09	2.224E-09	1.798E-09	1.497E-09	1.274E-09	1.103E-09
WSW	2.092E-08	1.281E-08	8.858E-09	5.325E-09	3.558E-09	2.609E-09	2.027E-09	1.639E-09	1.365E-09	1.162E-09	1.007E-09
W	2.221E-08	1.153E-08	7.660E-09	4.448E-09	3.004E-09	2.178E-09	1.675E-09	1.342E-09	1.109E-09	9.372E-10	8.066E-10
WNW	2.756E-08	1.612E-08	1.129E-08	7.147E-09	4.992E-09	3.779E-09	3.025E-09	2.493E-09	2.098E-09	1.798E-09	1.566E-09
NW	4.768E-08	2.629E-08	1.782E-08	1.075E-08	7.268E-09	5.378E-09	4.272E-09	3.486E-09	2.917E-09	2.494E-09	2.168E-09
NNW	5.968E-08	3.271E-08	2.114E-08	1.207E-08	8.161E-09	6.033E-09	4.744E-09	3.873E-09	3.264E-09	2.795E-09	2.427E-09
N	2.612E-08	1.611E-08	1.291E-08	9.818E-09	7.997E-09	6.503E-09	5.117E-09	4.168E-09	3.488E-09	2.983E-09	2.595E-09
NNE	1.803E-08	2.579E-08	1.670E-08	9.586E-09	6.502E-09	4.822E-09	3.782E-09	3.083E-09	2.584E-09	2.213E-09	1.927E-09
NE	1.470E-08	2.197E-08	1.433E-08	8.300E-09	5.660E-09	4.215E-09	3.364E-09	2.776E-09	2.356E-09	2.020E-09	1.761E-09
ENE	8.041E-09	7.666E-09	4.914E-09	2.765E-09	1.845E-09	1.349E-09	1.061E-09	8.627E-10	7.155E-10	6.069E-10	5.240E-10
E	6.401E-09	6.540E-09	4.215E-09	2.388E-09	1.599E-09	1.172E-09	9.099E-10	7.350E-10	6.155E-10	5.256E-10	4.542E-10
ESE	8.937E-09	7.269E-09	4.633E-09	2.582E-09	1.709E-09	1.242E-09	9.572E-10	7.684E-10	6.354E-10	5.375E-10	4.629E-10
SE	1.143E-08	6.892E-09	5.169E-09	3.452E-09	2.415E-09	1.820E-09	1.440E-09	1.178E-09	9.771E-10	8.286E-10	7.150E-10
SSE	2.365E-08	2.404E-08	1.535E-08	8.625E-09	5.763E-09	4.225E-09	3.283E-09	2.655E-09	2.211E-09	1.882E-09	1.630E-09

CHI/Q (SEC/METER CUBED) FOR EACH SEGMENT
SEGMENT BOUNDARIES IN MILES FROM THE SITE

DIRECTION FROM SITE	.5-1	1-2	2-3	3-4	4-5	5-10	10-20	20-30	30-40	40-50
S	4.799E-08	6.070E-08	4.607E-08	3.607E-08	3.854E-08	2.583E-08	1.128E-08	6.137E-09	4.003E-09	2.919E-09
SSW	2.502E-08	4.053E-08	3.943E-08	4.151E-08	3.470E-08	2.014E-08	7.934E-09	3.898E-09	2.431E-09	1.711E-09
SW	5.012E-08	9.482E-08	5.791E-08	3.415E-08	2.351E-08	1.361E-08	5.544E-09	2.826E-09	1.805E-09	1.277E-09
WSW	7.163E-08	1.248E-07	6.817E-08	3.746E-08	2.453E-08	1.286E-08	5.325E-09	2.629E-09	1.646E-09	1.165E-09
W	1.803E-07	1.649E-07	7.771E-08	4.200E-08	2.683E-08	1.218E-08	4.520E-09	2.197E-09	1.348E-09	9.397E-10
WNW	1.021E-07	1.407E-07	7.818E-08	4.794E-08	3.244E-08	1.651E-08	7.110E-09	3.801E-09	2.494E-09	1.801E-09
NW	2.127E-07	2.976E-07	1.588E-07	8.803E-08	5.700E-08	2.728E-08	1.077E-08	5.439E-09	3.494E-09	2.499E-09
NNW	1.563E-07	1.648E-07	1.421E-07	1.065E-07	7.141E-08	3.356E-08	1.235E-08	6.085E-09	3.890E-09	2.798E-09
N	1.854E-07	9.972E-08	6.042E-08	4.090E-08	2.986E-08	1.691E-08	9.696E-09	6.347E-09	4.180E-09	2.989E-09
NNE	5.813E-08	4.591E-08	3.106E-08	2.179E-08	1.766E-08	2.003E-08	9.797E-09	4.854E-09	3.093E-09	2.217E-09
NE	2.622E-08	3.334E-08	2.573E-08	1.839E-08	1.470E-08	1.696E-08	8.467E-09	4.260E-09	2.784E-09	2.024E-09
ENE	1.595E-08	1.984E-08	1.523E-08	1.076E-08	8.345E-09	6.526E-09	2.834E-09	1.366E-09	8.633E-10	6.084E-10
E	4.116E-09	9.425E-09	9.253E-09	7.382E-09	6.272E-09	5.476E-09	2.443E-09	1.181E-09	7.394E-10	5.258E-10
ESE	1.843E-08	2.292E-08	1.757E-08	1.237E-08	9.459E-09	6.468E-09	2.650E-09	1.253E-09	7.717E-10	5.389E-10
SE	2.185E-08	3.183E-08	2.492E-08	1.767E-08	1.306E-08	7.134E-09	3.372E-09	1.827E-09	1.176E-09	8.305E-10
SSE	5.413E-08	6.365E-08	4.619E-08	3.174E-08	2.440E-08	2.009E-08	8.847E-09	4.259E-09	2.665E-09	1.886E-09

ERP ELEVATED STACK RELEASES - APR-JUN 2012
2.260 DAY DECAY, UNDEPLETED
CORRECTED USING STANDARD OPEN TERRAIN FACTORS

ANNUAL AVERAGE CHI/Q (SEC/METER CUBED) DISTANCE IN MILES FROM THE SITE

SECTOR	.250	.500	.750	1.000	1.500	2.000	2.500	3.000	3.500	4.000	4.500
S	2.856E-10	1.904E-08	4.826E-08	6.213E-08	6.531E-08	5.623E-08	4.651E-08	3.851E-08	3.229E-08	3.707E-08	4.092E-08
SSW	6.624E-11	6.659E-09	2.327E-08	3.544E-08	4.343E-08	4.064E-08	3.552E-08	4.141E-08	4.403E-08	3.864E-08	3.416E-08
SW	3.201E-11	4.314E-09	3.723E-08	8.253E-08	1.216E-07	8.038E-08	5.716E-08	4.299E-08	3.374E-08	2.736E-08	2.276E-08
WSW	9.288E-11	6.854E-09	5.307E-08	1.177E-07	1.633E-07	9.894E-08	6.667E-08	4.833E-08	3.691E-08	2.931E-08	2.398E-08
W	8.098E-10	5.795E-08	1.960E-07	2.292E-07	1.892E-07	1.136E-07	7.585E-08	5.452E-08	4.131E-08	3.256E-08	2.646E-08
WNW	2.779E-10	1.957E-08	9.533E-08	1.481E-07	1.765E-07	1.093E-07	7.528E-08	5.896E-08	4.818E-08	3.859E-08	3.182E-08
NW	3.598E-08	1.048E-07	1.965E-07	2.784E-07	3.962E-07	2.320E-07	1.538E-07	1.129E-07	8.736E-08	6.891E-08	5.611E-08
NNW	6.714E-08	1.398E-07	1.618E-07	1.601E-07	1.734E-07	1.600E-07	1.448E-07	1.268E-07	1.104E-07	8.656E-08	7.013E-08
N	2.135E-07	2.341E-07	2.039E-07	1.470E-07	9.926E-08	7.618E-08	6.090E-08	4.919E-08	4.076E-08	3.448E-08	2.967E-08
NNE	1.856E-08	4.933E-08	6.412E-08	5.791E-08	4.761E-08	3.842E-08	3.120E-08	2.578E-08	2.171E-08	1.861E-08	1.621E-08
NE	1.563E-10	1.057E-08	2.641E-08	3.384E-08	3.577E-08	3.110E-08	2.598E-08	2.171E-08	1.835E-08	1.572E-08	1.365E-08
ENE	1.171E-10	7.167E-09	1.618E-08	2.013E-08	2.127E-08	1.848E-08	1.536E-08	1.275E-08	1.070E-08	9.101E-09	7.852E-09
E	2.707E-16	1.998E-10	3.234E-09	6.722E-09	1.005E-08	1.024E-08	9.397E-09	8.353E-09	7.373E-09	6.521E-09	5.804E-09
ESE	1.513E-10	8.263E-09	1.869E-08	2.328E-08	2.458E-08	2.135E-08	1.773E-08	1.469E-08	1.231E-08	1.045E-08	8.990E-09
SE	8.766E-11	5.787E-09	2.067E-08	3.073E-08	3.453E-08	3.022E-08	2.519E-08	2.096E-08	1.763E-08	1.503E-08	1.298E-08
SSE	3.901E-10	2.314E-08	5.548E-08	6.851E-08	6.850E-08	5.734E-08	4.658E-08	3.809E-08	3.164E-08	2.672E-08	2.292E-08

ANNUAL AVERAGE CHI/Q (SEC/METER CUBED) DISTANCE IN MILES FROM THE SITE

SECTOR	5.000	7.500	10.000	15.000	20.000	25.000	30.000	35.000	40.000	45.000	50.000
S	3.687E-08	2.768E-08	1.820E-08	1.059E-08	7.675E-09	5.918E-09	4.603E-09	3.721E-09	3.134E-09	2.684E-09	2.315E-09
SSW	3.122E-08	2.092E-08	1.336E-08	7.470E-09	5.060E-09	3.689E-09	2.829E-09	2.259E-09	1.858E-09	1.562E-09	1.337E-09
SW	2.062E-08	1.425E-08	9.207E-09	5.221E-09	3.596E-09	2.672E-09	2.090E-09	1.672E-09	1.377E-09	1.160E-09	9.939E-10
WSW	2.077E-08	1.266E-08	8.719E-09	5.197E-09	3.444E-09	2.504E-09	1.929E-09	1.547E-09	1.278E-09	1.079E-09	9.268E-10
W	2.202E-08	1.138E-08	7.529E-09	4.335E-09	2.903E-09	2.087E-09	1.592E-09	1.266E-09	1.037E-09	8.695E-10	7.423E-10
WNW	2.727E-08	1.585E-08	1.103E-08	6.884E-09	4.743E-09	3.542E-09	2.797E-09	2.274E-09	1.887E-09	1.596E-09	1.372E-09
NW	4.737E-08	2.603E-08	1.759E-08	1.053E-08	7.074E-09	5.199E-09	4.101E-09	3.325E-09	2.763E-09	2.346E-09	2.026E-09
NNW	5.926E-08	3.236E-08	2.084E-08	1.182E-08	7.928E-09	5.819E-09	4.543E-09	3.682E-09	3.081E-09	2.618E-09	2.258E-09
N	2.600E-08	1.600E-08	1.279E-08	9.672E-09	7.828E-09	6.325E-09	4.948E-09	4.008E-09	3.336E-09	2.836E-09	2.453E-09
NNE	1.791E-08	2.550E-08	1.645E-08	9.372E-09	6.309E-09	4.643E-09	3.614E-09	2.923E-09	2.432E-09	2.066E-09	1.786E-09
NE	1.460E-08	2.166E-08	1.406E-08	8.057E-09	5.438E-09	4.008E-09	3.164E-09	2.583E-09	2.168E-09	1.839E-09	1.587E-09
ENE	7.945E-09	7.507E-09	4.777E-09	2.650E-09	1.742E-09	1.256E-09	9.731E-10	7.797E-10	6.374E-10	5.330E-10	4.537E-10
E	6.335E-09	6.440E-09	4.129E-09	2.316E-09	1.535E-09	1.114E-09	8.560E-10	6.846E-10	5.677E-10	4.799E-10	4.106E-10
ESE	8.839E-09	7.158E-09	4.540E-09	2.506E-09	1.643E-09	1.183E-09	9.035E-10	7.188E-10	5.892E-10	4.941E-10	4.219E-10
SE	1.135E-08	6.819E-09	5.093E-09	3.374E-09	2.342E-09	1.751E-09	1.375E-09	1.116E-09	9.183E-10	7.728E-10	6.618E-10
SSE	2.350E-08	2.380E-08	1.514E-08	8.455E-09	5.612E-09	4.086E-09	3.154E-09	2.534E-09	2.095E-09	1.772E-09	1.525E-09

CHI/Q (SEC/METER CUBED) FOR EACH SEGMENT
SEGMENT BOUNDARIES IN MILES FROM THE SITE

DIRECTION FROM SITE	.5-1	1-2	2-3	3-4	4-5	5-10	10-20	20-30	30-40	40-50
S	4.793E-08	6.057E-08	4.590E-08	3.589E-08	3.828E-08	2.551E-08	1.099E-08	5.861E-09	3.749E-09	2.681E-09
SSW	2.499E-08	4.041E-08	3.924E-08	4.123E-08	3.440E-08	1.985E-08	7.708E-09	3.711E-09	2.269E-09	1.566E-09
SW	5.005E-08	9.459E-08	5.769E-08	3.395E-08	2.333E-08	1.342E-08	5.385E-09	2.686E-09	1.679E-09	1.163E-09
WSW	7.155E-08	1.246E-07	6.794E-08	3.728E-08	2.437E-08	1.271E-08	5.201E-09	2.525E-09	1.554E-09	1.081E-09
W	1.801E-07	1.645E-07	7.738E-08	4.175E-08	2.662E-08	1.203E-08	4.409E-09	2.107E-09	1.272E-09	8.720E-10
WNW	1.020E-07	1.403E-07	7.783E-08	4.761E-08	3.214E-08	1.624E-08	6.853E-09	3.564E-09	2.276E-09	1.599E-09
NW	2.125E-07	2.970E-07	1.583E-07	8.763E-08	5.667E-08	2.702E-08	1.056E-08	5.260E-09	3.332E-09	2.351E-09
NNW	1.562E-07	1.645E-07	1.416E-07	1.060E-07	7.097E-08	3.322E-08	1.209E-08	5.871E-09	3.699E-09	2.622E-09
N	1.853E-07	9.960E-08	6.029E-08	4.077E-08	2.974E-08	1.680E-08	9.545E-09	6.175E-09	4.021E-09	2.842E-09
NNE	5.807E-08	4.582E-08	3.096E-08	2.169E-08	1.755E-08	1.979E-08	9.584E-09	4.676E-09	2.933E-09	2.071E-09
NE	2.619E-08	3.327E-08	2.564E-08	1.830E-08	1.461E-08	1.671E-08	8.226E-09	4.052E-09	2.591E-09	1.843E-09
ENE	1.593E-08	1.978E-08	1.514E-08	1.067E-08	8.256E-09	6.391E-09	2.719E-09	1.273E-09	7.808E-10	5.346E-10
E	4.110E-09	9.395E-09	9.205E-09	7.328E-09	6.213E-09	5.390E-09	2.372E-09	1.123E-09	6.890E-10	4.802E-10
ESE	1.841E-08	2.285E-08	1.748E-08	1.228E-08	9.366E-09	6.368E-09	2.574E-09	1.194E-09	7.222E-10	4.956E-10
SE	2.183E-08	3.177E-08	2.484E-08	1.759E-08	1.298E-08	7.058E-09	3.297E-09	1.758E-09	1.115E-09	7.748E-10
SSE	5.408E-08	6.354E-08	4.605E-08	3.161E-08	2.426E-08	1.989E-08	8.678E-09	4.120E-09	2.544E-09	1.776E-09

ERP ELEVATED STACK RELEASES - APR-JUN 2012
8.000 DAY DECAY, DEPLETED
CORRECTED USING STANDARD OPEN TERRAIN FACTORS

ANNUAL AVERAGE CHI/Q (SEC/METER CUBED) DISTANCE IN MILES FROM THE SITE

SECTOR	.250	.500	.750	1.000	1.500	2.000	2.500	3.000	3.500	4.000	4.500
S	2.856E-10	1.889E-08	4.768E-08	6.156E-08	6.447E-08	5.516E-08	4.534E-08	3.732E-08	3.113E-08	3.574E-08	3.954E-08
SSW	6.626E-11	6.610E-09	2.307E-08	3.525E-08	4.303E-08	4.006E-08	3.485E-08	4.060E-08	4.316E-08	3.779E-08	3.336E-08
SW	3.202E-11	4.286E-09	3.709E-08	8.243E-08	1.202E-07	7.878E-08	5.562E-08	4.160E-08	3.250E-08	2.625E-08	2.176E-08
WSW	9.290E-11	6.804E-09	5.284E-08	1.174E-07	1.610E-07	9.664E-08	6.461E-08	4.654E-08	3.535E-08	2.794E-08	2.276E-08
W	8.100E-10	5.751E-08	1.945E-07	2.262E-07	1.852E-07	1.102E-07	7.311E-08	5.224E-08	3.938E-08	3.090E-08	2.501E-08
WNW	2.780E-10	1.945E-08	9.479E-08	1.465E-07	1.735E-07	1.067E-07	7.312E-08	5.715E-08	4.666E-08	3.725E-08	3.060E-08
NW	3.598E-08	1.039E-07	1.934E-07	2.748E-07	3.908E-07	2.274E-07	1.499E-07	1.098E-07	8.471E-08	6.657E-08	5.396E-08
NNW	6.715E-08	1.386E-07	1.588E-07	1.575E-07	1.707E-07	1.571E-07	1.421E-07	1.244E-07	1.083E-07	8.458E-08	6.823E-08
N	2.135E-07	2.321E-07	1.996E-07	1.433E-07	9.651E-08	7.391E-08	5.891E-08	4.744E-08	3.919E-08	3.306E-08	2.839E-08
NNE	1.856E-08	4.891E-08	6.292E-08	5.679E-08	4.661E-08	3.747E-08	3.030E-08	2.494E-08	2.093E-08	1.789E-08	1.554E-08
NE	1.564E-10	1.049E-08	2.609E-08	3.352E-08	3.531E-08	3.053E-08	2.536E-08	2.108E-08	1.773E-08	1.513E-08	1.309E-08
ENE	1.171E-10	7.108E-09	1.596E-08	1.991E-08	2.099E-08	1.812E-08	1.497E-08	1.235E-08	1.030E-08	8.722E-09	7.491E-09
E	2.707E-16	1.999E-10	3.236E-09	6.730E-09	9.994E-09	1.014E-08	9.267E-09	8.212E-09	7.230E-09	6.382E-09	5.670E-09
ESE	1.513E-10	8.195E-09	1.845E-08	2.304E-08	2.426E-08	2.094E-08	1.728E-08	1.423E-08	1.185E-08	1.001E-08	8.571E-09
SE	8.768E-11	5.745E-09	2.051E-08	3.059E-08	3.417E-08	2.970E-08	2.460E-08	2.035E-08	1.703E-08	1.445E-08	1.243E-08
SSE	3.901E-10	2.295E-08	5.479E-08	6.783E-08	6.754E-08	5.616E-08	4.532E-08	3.682E-08	3.041E-08	2.554E-08	2.180E-08

ANNUAL AVERAGE CHI/Q (SEC/METER CUBED) DISTANCE IN MILES FROM THE SITE

SECTOR	5.000	7.500	10.000	15.000	20.000	25.000	30.000	35.000	40.000	45.000	50.000
S	3.558E-08	2.646E-08	1.692E-08	9.291E-09	6.305E-09	4.612E-09	3.458E-09	2.707E-09	2.222E-09	1.863E-09	1.577E-09
SSW	3.046E-08	2.012E-08	1.248E-08	6.578E-09	4.190E-09	2.959E-09	2.209E-09	1.723E-09	1.388E-09	1.145E-09	9.635E-10
SW	1.971E-08	1.350E-08	8.488E-09	4.553E-09	2.946E-09	2.081E-09	1.581E-09	1.235E-09	9.954E-10	8.223E-10	6.924E-10
WSW	1.967E-08	1.177E-08	7.907E-09	4.500E-09	2.871E-09	2.024E-09	1.519E-09	1.190E-09	9.628E-10	7.980E-10	6.741E-10
W	2.074E-08	1.056E-08	6.860E-09	3.758E-09	2.401E-09	1.672E-09	1.241E-09	9.636E-10	7.730E-10	6.358E-10	5.334E-10
WNW	2.613E-08	1.484E-08	1.006E-08	5.931E-09	3.812E-09	2.707E-09	2.071E-09	1.645E-09	1.338E-09	1.111E-09	9.395E-10
NW	4.535E-08	2.425E-08	1.591E-08	9.005E-09	5.768E-09	4.077E-09	3.120E-09	2.465E-09	2.001E-09	1.664E-09	1.409E-09
NNW	5.739E-08	3.047E-08	1.901E-08	1.011E-08	6.295E-09	4.343E-09	3.221E-09	2.516E-09	2.049E-09	1.700E-09	1.434E-09
N	2.482E-08	1.514E-08	1.210E-08	9.186E-09	7.299E-09	5.665E-09	4.321E-09	3.423E-09	2.791E-09	2.331E-09	1.982E-09
NNE	1.724E-08	2.476E-08	1.550E-08	8.367E-09	5.357E-09	3.783E-09	2.843E-09	2.230E-09	1.804E-09	1.496E-09	1.263E-09
NE	1.402E-08	2.107E-08	1.327E-08	7.214E-09	4.625E-09	3.269E-09	2.500E-09	1.995E-09	1.641E-09	1.368E-09	1.161E-09
ENE	7.573E-09	7.171E-09	4.448E-09	2.348E-09	1.462E-09	1.008E-09	7.523E-10	5.849E-10	4.674E-10	3.830E-10	3.201E-10
E	6.199E-09	6.293E-09	3.919E-09	2.070E-09	1.279E-09	8.766E-10	6.418E-10	4.918E-10	3.924E-10	3.207E-10	2.669E-10
ESE	8.408E-09	6.750E-09	4.169E-09	2.188E-09	1.361E-09	9.383E-10	6.901E-10	5.311E-10	4.224E-10	3.446E-10	2.868E-10
SE	1.082E-08	6.414E-09	4.761E-09	3.136E-09	2.166E-09	1.615E-09	1.266E-09	1.025E-09	8.290E-10	6.867E-10	5.796E-10
SSE	2.233E-08	2.261E-08	1.394E-08	7.388E-09	4.682E-09	3.282E-09	2.451E-09	1.912E-09	1.541E-09	1.272E-09	1.071E-09

CHI/Q (SEC/METER CUBED) FOR EACH SEGMENT
SEGMENT BOUNDARIES IN MILES FROM THE SITE

DIRECTION FROM SITE	.5-1	1-2	2-3	3-4	4-5	5-10	10-20	20-30	30-40	40-50
S	4.745E-08	5.969E-08	4.475E-08	3.466E-08	3.695E-08	2.425E-08	9.659E-09	4.602E-09	2.737E-09	1.863E-09
SSW	2.483E-08	3.998E-08	3.854E-08	4.038E-08	3.360E-08	1.903E-08	6.829E-09	2.987E-09	1.734E-09	1.150E-09
SW	4.995E-08	9.340E-08	5.619E-08	3.272E-08	2.233E-08	1.265E-08	4.713E-09	2.112E-09	1.243E-09	8.255E-10
WSW	7.130E-08	1.227E-07	6.592E-08	3.572E-08	2.315E-08	1.181E-08	4.533E-09	2.048E-09	1.197E-09	8.010E-10
W	1.782E-07	1.610E-07	7.466E-08	3.982E-08	2.517E-08	1.118E-08	3.844E-09	1.694E-09	9.704E-10	6.385E-10
WNW	1.011E-07	1.378E-07	7.569E-08	4.607E-08	3.091E-08	1.522E-08	5.906E-09	2.747E-09	1.650E-09	1.115E-09
NW	2.097E-07	2.924E-07	1.545E-07	8.496E-08	5.451E-08	2.523E-08	9.101E-09	4.145E-09	2.475E-09	1.669E-09
NNW	1.538E-07	1.618E-07	1.390E-07	1.038E-07	6.906E-08	3.136E-08	1.039E-08	4.415E-09	2.539E-09	1.705E-09
N	1.818E-07	9.686E-08	5.832E-08	3.921E-08	2.845E-08	1.594E-08	8.995E-09	5.563E-09	3.439E-09	2.338E-09
NNE	5.708E-08	4.481E-08	3.007E-08	2.092E-08	1.686E-08	1.897E-08	8.613E-09	3.827E-09	2.243E-09	1.501E-09
NE	2.593E-08	3.279E-08	2.502E-08	1.770E-08	1.404E-08	1.603E-08	7.409E-09	3.323E-09	2.004E-09	1.372E-09
ENE	1.575E-08	1.948E-08	1.476E-08	1.028E-08	7.886E-09	6.050E-09	2.421E-09	1.027E-09	5.880E-10	3.847E-10
E	4.114E-09	9.333E-09	9.077E-09	7.188E-09	6.077E-09	5.217E-09	2.129E-09	8.899E-10	4.968E-10	3.220E-10
ESE	1.821E-08	2.251E-08	1.704E-08	1.183E-08	8.936E-09	5.971E-09	2.261E-09	9.518E-10	5.351E-10	3.463E-10
SE	2.171E-08	3.139E-08	2.426E-08	1.700E-08	1.243E-08	6.659E-09	3.066E-09	1.622E-09	1.019E-09	6.892E-10
SSE	5.351E-08	6.255E-08	4.481E-08	3.038E-08	2.311E-08	1.870E-08	7.642E-09	3.323E-09	1.925E-09	1.277E-09

ERP ELEVATED STACK RELEASES - APR-JUN 2012
CORRECTED USING STANDARD OPEN TERRAIN FACTORS

********** RELATIVE DEPOSITION PER UNIT AREA (M**-2) AT FIXED POINTS BY DOWNWIND SECTORS **********

DIRECTION FROM SITE	DISTANCES IN MILES .25	.50	.75	1.00	1.50	2.00	2.50	3.00	3.50	4.00	4.50
S	2.698E-09	2.617E-09	2.850E-09	2.327E-09	1.284E-09	8.264E-10	5.726E-10	4.165E-10	3.139E-10	2.558E-10	2.321E-10
SSW	5.879E-10	8.127E-10	1.186E-09	1.103E-09	6.551E-10	4.324E-10	3.032E-10	2.219E-10	2.106E-10	1.592E-10	1.246E-10
SW	3.217E-10	5.732E-10	9.482E-10	9.196E-10	1.089E-09	5.917E-10	3.659E-10	2.480E-10	1.790E-10	1.353E-10	1.059E-10
WSW	8.500E-10	1.028E-09	1.373E-09	2.697E-09	1.368E-09	7.421E-10	4.586E-10	3.108E-10	2.243E-10	1.695E-10	1.326E-10
W	8.434E-10	4.656E-09	4.168E-09	2.689E-09	1.252E-09	6.773E-10	4.179E-10	2.829E-10	2.040E-10	1.541E-10	1.205E-10
WNW	8.434E-10	9.886E-10	3.905E-09	2.701E-09	1.679E-09	8.408E-10	4.968E-10	3.287E-10	2.396E-10	1.824E-10	1.464E-10
NW	1.064E-08	8.190E-09	6.274E-09	6.275E-09	3.457E-09	1.724E-09	1.024E-09	6.840E-10	4.982E-10	3.885E-10	3.197E-10
NNW	1.375E-08	1.054E-08	8.009E-09	4.985E-09	3.367E-09	1.793E-09	1.103E-09	8.606E-10	6.258E-10	4.868E-10	3.994E-10
N	3.203E-08	2.390E-08	1.711E-08	9.981E-09	4.126E-09	2.341E-09	1.515E-09	1.063E-09	7.861E-10	6.042E-10	4.782E-10
NNE	4.957E-09	3.954E-09	3.246E-09	2.175E-09	1.036E-09	6.293E-10	4.233E-10	3.032E-10	2.267E-10	1.751E-10	1.386E-10
NE	1.349E-09	1.309E-09	1.425E-09	1.164E-09	6.418E-10	4.132E-10	2.863E-10	2.083E-10	1.570E-10	1.216E-10	9.629E-11
ENE	1.062E-09	9.421E-10	9.166E-10	6.996E-10	3.690E-10	2.337E-10	1.606E-10	1.163E-10	8.751E-11	6.773E-11	5.363E-11
E	1.987E-11	1.192E-10	2.538E-10	2.629E-10	1.642E-10	1.101E-10	7.776E-11	5.712E-11	4.326E-11	3.358E-11	2.659E-11
ESE	1.589E-09	1.389E-09	1.324E-09	9.968E-10	5.206E-10	3.285E-10	2.253E-10	1.631E-10	1.226E-10	9.488E-11	7.512E-11
SE	8.553E-10	1.060E-09	1.440E-09	1.304E-09	7.638E-10	5.019E-10	3.511E-10	2.567E-10	1.940E-10	1.504E-10	1.191E-10
SSE	3.755E-09	3.528E-09	3.699E-09	2.957E-09	1.609E-09	1.031E-09	7.124E-10	5.176E-10	3.899E-10	3.020E-10	2.391E-10

DIRECTION FROM SITE	DISTANCES IN MILES 5.00	7.50	10.00	15.00	20.00	25.00	30.00	35.00	40.00	45.00	50.00
S	1.866E-10	1.428E-10	9.948E-11	5.866E-11	3.728E-11	2.550E-11	1.825E-11	1.368E-11	1.077E-11	8.607E-12	7.026E-12
SSW	1.005E-10	9.108E-11	6.568E-11	3.977E-11	2.360E-11	1.640E-11	1.175E-11	8.824E-12	6.886E-12	5.500E-12	4.489E-12
SW	8.510E-11	6.083E-11	4.161E-11	2.410E-11	1.519E-11	1.086E-11	7.900E-12	5.932E-12	4.613E-12	3.685E-12	3.007E-12
WSW	1.070E-10	6.706E-11	4.433E-11	2.942E-11	1.781E-11	1.194E-11	8.556E-12	6.425E-12	4.995E-12	3.990E-12	3.257E-12
W	9.685E-11	4.339E-11	4.531E-11	2.611E-11	1.786E-11	1.208E-11	8.657E-12	6.500E-12	5.054E-12	4.037E-12	3.295E-12
WNW	1.242E-10	6.972E-11	4.799E-11	2.798E-11	1.950E-11	1.266E-11	8.994E-12	6.754E-12	5.251E-12	4.195E-12	3.424E-12
NW	2.754E-10	1.646E-10	1.172E-10	7.289E-11	4.429E-11	2.968E-11	2.123E-11	1.594E-11	1.242E-11	9.922E-12	8.098E-12
NNW	3.429E-10	2.029E-10	1.438E-10	8.652E-11	5.587E-11	3.781E-11	2.715E-11	1.935E-11	1.509E-11	1.205E-11	9.838E-12
N	3.874E-10	1.862E-10	1.154E-10	6.314E-11	9.049E-11	5.919E-11	4.241E-11	3.184E-11	2.476E-11	1.978E-11	1.614E-11
NNE	1.120E-10	1.573E-10	9.738E-11	5.054E-11	3.085E-11	2.066E-11	1.477E-11	1.105E-11	8.572E-12	6.834E-12	5.569E-12
NE	7.764E-11	1.120E-10	6.954E-11	3.620E-11	2.211E-11	1.479E-11	1.052E-11	7.867E-12	6.117E-12	4.886E-12	3.988E-12
ENE	4.326E-11	3.314E-11	2.206E-11	1.252E-11	7.919E-12	5.330E-12	3.822E-12	3.070E-12	2.388E-12	1.909E-12	1.560E-12
E	2.142E-11	2.641E-11	1.940E-11	1.190E-11	7.599E-12	5.030E-12	3.528E-12	2.583E-12	1.968E-12	1.656E-12	1.342E-12
ESE	6.061E-11	4.579E-11	3.038E-11	1.720E-11	1.087E-11	7.328E-12	5.258E-12	3.948E-12	3.069E-12	2.461E-12	2.017E-12
SE	9.598E-11	4.551E-11	2.778E-11	1.466E-11	8.957E-12	6.157E-12	4.580E-12	7.214E-12	5.568E-12	4.431E-12	3.611E-12
SSE	1.928E-10	2.086E-10	1.274E-10	6.511E-11	3.954E-11	2.649E-11	1.895E-11	1.421E-11	1.104E-11	8.808E-12	7.183E-12

********** RELATIVE DEPOSITION PER UNIT AREA (M**-2) BY DOWNWIND SECTORS **********

DIRECTION FROM SITE	SEGMENT BOUNDARIES IN MILES .5-1	1-2	2-3	3-4	4-5	5-10	10-20	20-30	30-40	40-50
S	2.566E-09	1.312E-09	5.778E-10	3.211E-10	2.223E-10	1.333E-10	5.823E-11	2.574E-11	1.388E-11	8.663E-12
SSW	1.066E-09	6.557E-10	3.052E-10	1.942E-10	1.259E-10	8.188E-11	3.834E-11	1.646E-11	8.922E-12	5.536E-12
SW	8.522E-10	8.304E-10	3.789E-10	1.821E-10	1.069E-10	5.768E-11	2.403E-11	1.083E-11	5.992E-12	3.709E-12
WSW	1.885E-09	1.385E-09	4.751E-10	2.281E-10	1.341E-10	6.583E-11	2.757E-11	1.215E-11	6.489E-12	4.016E-12
W	3.619E-09	1.316E-09	4.331E-10	2.075E-10	1.217E-10	5.613E-11	2.671E-11	1.225E-11	6.566E-12	4.064E-12
WNW	2.722E-09	1.533E-09	5.213E-10	2.433E-10	1.489E-10	7.218E-11	2.866E-11	1.302E-11	6.821E-12	4.222E-12
NW	6.700E-09	3.313E-09	1.075E-09	5.095E-10	3.237E-10	1.682E-10	7.003E-11	3.020E-11	1.611E-11	9.987E-12
NNW	7.227E-09	3.027E-09	1.190E-09	6.399E-10	4.044E-10	2.077E-10	8.562E-11	3.836E-11	1.995E-11	1.213E-11
N	1.545E-08	4.634E-09	1.555E-09	7.958E-10	4.819E-10	1.995E-10	8.692E-11	6.082E-11	3.216E-11	1.991E-11
NNE	2.927E-09	1.108E-09	4.302E-10	2.289E-10	1.396E-10	1.206E-10	5.220E-11	2.102E-11	1.117E-11	6.880E-12
NE	1.283E-09	6.562E-10	2.889E-10	1.582E-10	9.688E-11	8.548E-11	3.734E-11	1.503E-11	7.958E-12	4.918E-12
ENE	8.258E-10	3.823E-10	1.624E-10	8.821E-11	5.397E-11	3.047E-11	1.260E-11	5.417E-12	3.025E-12	1.922E-12
E	2.279E-10	1.621E-10	7.813E-11	4.353E-11	2.675E-11	2.218E-11	1.166E-11	5.114E-12	2.619E-12	1.632E-12
ESE	1.193E-09	5.410E-10	2.279E-10	1.236E-10	7.560E-11	4.223E-11	1.731E-11	7.446E-12	3.987E-12	2.477E-12
SE	1.295E-09	7.675E-10	3.536E-10	1.953E-10	1.198E-10	4.885E-11	1.504E-11	6.273E-12	5.835E-12	4.464E-12
SSE	3.331E-09	1.651E-09	7.194E-10	3.929E-10	2.406E-10	1.690E-10	6.760E-11	2.695E-11	1.436E-11	8.867E-12

ERP ELEVATED STACK RELEASES - APR-JUN 2012
CORRECTED USING STANDARD OPEN TERRAIN FACTORS
SPECIFIC POINTS OF INTEREST

RELEASE ID	TYPE OF LOCATION	DIRECTION FROM SITE	DIST. (MI)	X/Q (SEC/M3) NO DECAY UNDEPLETED	X/Q (SEC/M3) 2.26 DAY DECAY UNDEPLETED	X/Q (SEC/M3) 8.0 DAY DECAY DEPLETED	D/Q (PER SQ.METER)
A	Site Boundary	S	.80	5.2E-08	5.2E-08	5.1E-08	2.8E-09
A	Site Boundary	SSW	.82	2.8E-08	2.8E-08	2.7E-08	1.2E-09
A	Site Boundary	SW	.97	7.9E-08	7.9E-08	7.8E-08	9.5E-10
A	Site Boundary	WSW	.93	1.0E-07	1.0E-07	1.0E-07	2.5E-09
A	Site Boundary	W	.91	2.3E-07	2.3E-07	2.2E-07	3.1E-09
A	Site Boundary	WNW	.94	1.4E-07	1.4E-07	1.4E-07	3.0E-09
A	Site Boundary	NW	.81	2.1E-07	2.1E-07	2.1E-07	5.6E-09
A	Site Boundary	NNW	.69	1.5E-07	1.5E-07	1.5E-07	8.5E-09
A	Site Boundary	N	.67	2.1E-07	2.1E-07	2.0E-07	1.9E-08
A	Site Boundary	NNE	.60	5.6E-08	5.6E-08	5.5E-08	3.6E-09
A	Site Boundary	NE	.62	1.8E-08	1.8E-08	1.8E-08	1.3E-09
A	Site Boundary	ENE	.59	1.0E-08	1.0E-08	1.0E-08	9.2E-10
A	Site Boundary	E	.53	3.2E-10	3.2E-10	3.2E-10	1.3E-10
A	Site Boundary	ESE	.54	9.7E-09	9.7E-09	9.6E-09	1.4E-09
A	Site Boundary	SE	.65	1.4E-08	1.4E-08	1.3E-08	1.3E-09
A	Site Boundary	SSE	.81	6.0E-08	6.0E-08	5.9E-08	3.5E-09
A	Nearest Res	SSW	3.00	4.2E-08	4.1E-08	4.1E-08	2.2E-10
A	Nearest Res	SW	1.30	1.1E-07	1.1E-07	1.1E-07	1.4E-09
A	Nearest Res	WSW	1.90	1.1E-07	1.1E-07	1.1E-07	8.3E-10
A	Nearest Res	W	2.90	5.8E-08	5.8E-08	5.6E-08	3.0E-10
A	Nearest Res	WNW	1.70	1.4E-07	1.4E-07	1.4E-07	1.2E-09
A	Nearest Res	NW	.90	2.4E-07	2.4E-07	2.4E-07	7.5E-09
A	Nearest Res	NNW	1.90	1.6E-07	1.6E-07	1.6E-07	2.0E-09
A	Nearest Res	N	3.00	4.9E-08	4.9E-08	4.7E-08	1.1E-09
A	Nearest Res	NNE	1.90	4.0E-08	4.0E-08	3.9E-08	6.9E-10
A	Nearest Res	NE	3.00	2.2E-08	2.2E-08	2.1E-08	2.1E-10
A	Nearest Res	ENE	1.70	2.0E-08	2.0E-08	2.0E-08	3.0E-10
A	Nearest Res	E	2.20	1.0E-08	1.0E-08	9.8E-09	9.5E-11
A	Nearest Res	ESE	2.30	1.9E-08	1.9E-08	1.9E-08	2.6E-10
A	Nearest Res	SE	3.00	2.1E-08	2.1E-08	2.0E-08	2.6E-10
A	Nearest Cow	NNW	3.50	1.1E-07	1.1E-07	1.1E-07	6.3E-10
A	Nearest Garde	SSW	3.00	4.2E-08	4.1E-08	4.1E-08	2.2E-10
A	Nearest Garde	SW	1.30	1.1E-07	1.1E-07	1.1E-07	1.4E-09
A	Nearest Garde	WSW	1.90	1.1E-07	1.1E-07	1.1E-07	8.3E-10
A	Nearest Garde	W	2.90	5.8E-08	5.8E-08	5.6E-08	3.0E-10
A	Nearest Garde	WNW	2.40	8.1E-08	8.1E-08	7.8E-08	5.5E-10
A	Nearest Garde	NW	2.90	1.2E-07	1.2E-07	1.2E-07	7.4E-10
A	Nearest Garde	NNW	2.80	1.3E-07	1.3E-07	1.3E-07	9.9E-10
A	Nearest Garde	ENE	1.70	2.0E-08	2.0E-08	2.0E-08	3.0E-10
A	Nearest Garde	E	2.20	1.0E-08	1.0E-08	9.8E-09	9.5E-11
A	Nearest Garde	ESE	2.30	1.9E-08	1.9E-08	1.9E-08	2.6E-10
A	MAXIMUM CHI/Q	S	1.50	6.5E-08	6.5E-08	6.4E-08	1.3E-09
A	MAXIMUM CHI/Q	SSW	3.50	4.4E-08	4.4E-08	4.3E-08	2.1E-10
A	MAXIMUM CHI/Q	SW	1.50	1.2E-07	1.2E-07	1.2E-07	1.1E-09
A	MAXIMUM CHI/Q	WSW	1.50	1.6E-07	1.6E-07	1.6E-07	1.4E-09
A	MAXIMUM CHI/Q	W	1.00	2.3E-07	2.3E-07	2.3E-07	2.7E-09
A	MAXIMUM CHI/Q	WNW	1.50	1.8E-07	1.8E-07	1.7E-07	1.7E-09
A	MAXIMUM CHI/Q	NW	1.50	4.0E-07	4.0E-07	3.9E-07	3.5E-09
A	MAXIMUM CHI/Q	NNW	1.50	1.7E-07	1.7E-07	1.7E-07	3.4E-09
A	MAXIMUM CHI/Q	N	.50	2.3E-07	2.3E-07	2.2E-07	2.4E-08
A	MAXIMUM CHI/Q	NNE	.75	6.4E-08	6.4E-08	6.3E-08	3.2E-09
A	MAXIMUM CHI/Q	NE	1.50	3.6E-08	3.6E-08	3.5E-08	6.4E-10
A	MAXIMUM CHI/Q	ENE	1.50	2.1E-08	2.1E-08	2.1E-08	3.7E-10
A	MAXIMUM CHI/Q	E	2.00	1.0E-08	1.0E-08	1.0E-08	1.1E-10
A	MAXIMUM CHI/Q	ESE	1.50	2.5E-08	2.5E-08	2.4E-08	5.2E-10
A	MAXIMUM CHI/Q	SE	1.50	3.5E-08	3.5E-08	3.4E-08	7.6E-10
A	MAXIMUM CHI/Q	SSE	1.50	6.9E-08	6.8E-08	6.8E-08	1.6E-09

Atmospheric Diffusion Estimates

Elevated Releases

January-June 2012

ERP ELEVATED STACK RELEASES - JAN-JUN 2012
NO DECAY, UNDEPLETED
CORRECTED USING STANDARD OPEN TERRAIN FACTORS

ANNUAL AVERAGE CHI/Q (SEC/METER CUBED) DISTANCE IN MILES FROM THE SITE

SECTOR	.250	.500	.750	1.000	1.500	2.000	2.500	3.000	3.500	4.000	4.500
S	1.574E-10	1.117E-08	3.848E-08	5.716E-08	6.448E-08	5.630E-08	4.674E-08	3.874E-08	3.249E-08	3.694E-08	4.007E-08
SSW	5.026E-11	4.690E-09	1.682E-08	2.608E-08	3.223E-08	3.017E-08	2.637E-08	3.077E-08	3.308E-08	2.930E-08	2.618E-08
SW	1.601E-11	2.257E-09	2.258E-08	5.280E-08	8.476E-08	5.748E-08	4.162E-08	3.174E-08	2.519E-08	2.061E-08	1.729E-08
WSW	4.645E-11	3.495E-09	3.008E-08	7.020E-08	1.111E-07	7.087E-08	4.969E-08	3.718E-08	2.916E-08	2.368E-08	1.976E-08
W	5.438E-10	4.913E-08	1.685E-07	1.930E-07	1.566E-07	9.437E-08	6.338E-08	4.584E-08	3.495E-08	2.772E-08	2.266E-08
WNW	1.857E-10	1.480E-08	9.658E-08	1.632E-07	1.951E-07	1.193E-07	8.123E-08	6.249E-08	5.024E-08	3.999E-08	3.281E-08
NW	1.805E-08	5.599E-08	1.329E-07	2.314E-07	3.599E-07	2.119E-07	1.407E-07	1.034E-07	7.989E-08	6.302E-08	5.131E-08
NNW	3.481E-08	7.951E-08	1.060E-07	1.193E-07	1.402E-07	1.325E-07	1.232E-07	1.115E-07	1.012E-07	8.002E-08	6.528E-08
N	1.196E-07	1.471E-07	1.412E-07	1.127E-07	8.587E-08	6.952E-08	5.700E-08	4.668E-08	3.901E-08	3.321E-08	2.871E-08
NNE	1.507E-08	4.330E-08	5.783E-08	5.474E-08	4.792E-08	3.994E-08	3.307E-08	2.770E-08	2.357E-08	2.037E-08	1.786E-08
NE	1.218E-09	1.263E-08	2.675E-08	3.386E-08	3.677E-08	3.273E-08	2.780E-08	2.353E-08	2.010E-08	1.737E-08	1.520E-08
ENE	8.028E-09	1.671E-08	2.264E-08	2.391E-08	2.326E-08	1.991E-08	1.656E-08	1.383E-08	1.170E-08	1.005E-08	8.749E-09
E	3.174E-11	2.375E-09	9.048E-09	1.416E-08	1.748E-08	1.641E-08	1.443E-08	1.252E-08	1.091E-08	9.578E-09	8.496E-09
ESE	7.566E-11	4.593E-09	1.636E-08	2.499E-08	2.917E-08	2.604E-08	2.198E-08	1.847E-08	1.567E-08	1.347E-08	1.174E-08
SE	4.384E-11	4.042E-09	2.719E-08	4.700E-08	5.677E-08	5.079E-08	4.281E-08	3.588E-08	3.033E-08	2.597E-08	2.251E-08
SSE	2.661E-10	1.602E-08	4.555E-08	6.175E-08	6.524E-08	5.542E-08	4.528E-08	3.712E-08	3.088E-08	2.609E-08	2.239E-08

ANNUAL AVERAGE CHI/Q (SEC/METER CUBED) DISTANCE IN MILES FROM THE SITE

SECTOR	5.000	7.500	10.000	15.000	20.000	25.000	30.000	35.000	40.000	45.000	50.000
S	3.582E-08	2.544E-08	1.666E-08	9.657E-09	6.928E-09	5.320E-09	4.159E-09	3.382E-09	2.860E-09	2.461E-09	2.139E-09
SSW	2.433E-08	1.831E-08	1.189E-08	6.818E-09	4.810E-09	3.596E-09	2.802E-09	2.271E-09	1.895E-09	1.616E-09	1.402E-09
SW	1.592E-08	1.168E-08	7.648E-09	4.427E-09	3.116E-09	2.359E-09	1.876E-09	1.521E-09	1.269E-09	1.082E-09	9.389E-10
WSW	1.778E-08	1.269E-08	9.414E-09	6.068E-09	4.126E-09	3.066E-09	2.409E-09	1.965E-09	1.649E-09	1.414E-09	1.232E-09
W	1.896E-08	1.005E-08	6.952E-09	4.362E-09	3.162E-09	2.328E-09	1.807E-09	1.460E-09	1.215E-09	1.033E-09	8.948E-10
WNW	2.792E-08	1.583E-08	1.086E-08	6.696E-09	4.620E-09	3.466E-09	2.752E-09	2.255E-09	1.890E-09	1.615E-09	1.404E-09
NW	4.327E-08	2.363E-08	1.588E-08	9.449E-09	6.359E-09	4.687E-09	3.701E-09	3.011E-09	2.513E-09	2.144E-09	1.861E-09
NNW	5.580E-08	3.189E-08	2.080E-08	1.203E-08	8.199E-09	6.099E-09	4.838E-09	3.978E-09	3.389E-09	2.919E-09	2.542E-09
N	2.525E-08	1.569E-08	1.268E-08	9.777E-09	8.009E-09	6.520E-09	5.125E-09	4.171E-09	3.488E-09	2.981E-09	2.591E-09
NNE	2.013E-08	3.404E-08	2.223E-08	1.289E-08	8.803E-09	6.562E-09	5.169E-09	4.228E-09	3.555E-09	3.053E-09	2.665E-09
NE	1.669E-08	2.890E-08	1.893E-08	1.102E-08	7.543E-09	5.633E-09	4.506E-09	3.724E-09	3.161E-09	2.714E-09	2.369E-09
ENE	9.223E-09	1.455E-08	9.700E-09	5.762E-09	3.989E-09	3.003E-09	2.514E-09	2.137E-09	1.798E-09	1.545E-09	1.350E-09
E	9.402E-09	1.353E-08	8.919E-09	5.215E-09	3.570E-09	2.663E-09	2.098E-09	1.716E-09	1.480E-09	1.292E-09	1.125E-09
ESE	1.209E-08	1.472E-08	9.792E-09	5.780E-09	3.977E-09	2.977E-09	2.351E-09	1.926E-09	1.621E-09	1.393E-09	1.216E-09
SE	1.974E-08	1.202E-08	9.140E-09	6.348E-09	4.577E-09	3.566E-09	2.920E-09	2.472E-09	2.068E-09	1.768E-09	1.536E-09
SSE	2.287E-08	2.423E-08	1.553E-08	8.775E-09	5.883E-09	4.324E-09	3.367E-09	2.728E-09	2.275E-09	1.940E-09	1.683E-09

CHI/Q (SEC/METER CUBED) FOR EACH SEGMENT
SEGMENT BOUNDARIES IN MILES FROM THE SITE

DIRECTION FROM SITE	.5-1	1-2	2-3	3-4	4-5	5-10	10-20	20-30	30-40	40-50
S	4.072E-08	5.922E-08	4.609E-08	3.597E-08	3.757E-08	2.385E-08	1.000E-08	5.285E-09	3.405E-09	2.460E-09
SSW	1.824E-08	2.995E-08	2.915E-08	3.098E-08	2.642E-08	1.679E-08	7.052E-09	3.602E-09	2.279E-09	1.619E-09
SW	3.149E-08	6.553E-08	4.190E-08	2.532E-08	1.777E-08	1.083E-08	4.560E-09	2.367E-09	1.526E-09	1.084E-09
WSW	4.200E-08	8.413E-08	5.034E-08	2.937E-08	2.019E-08	1.237E-08	5.949E-09	3.086E-09	1.972E-09	1.416E-09
W	1.529E-07	1.370E-07	6.463E-08	3.531E-08	2.279E-08	1.065E-08	4.404E-09	2.342E-09	1.466E-09	1.036E-09
WNW	1.080E-07	1.543E-07	8.389E-08	4.984E-08	3.313E-08	1.631E-08	6.699E-09	3.488E-09	2.258E-09	1.618E-09
NW	1.596E-07	2.656E-07	1.448E-07	8.017E-08	5.180E-08	2.455E-08	9.505E-09	4.739E-09	3.018E-09	2.148E-09
NNW	1.060E-07	1.322E-07	1.210E-07	9.610E-08	6.614E-08	3.228E-08	1.228E-08	6.154E-09	3.999E-09	2.918E-09
N	1.299E-07	8.457E-08	5.621E-08	3.899E-08	2.876E-08	1.648E-08	9.637E-09	6.359E-09	4.184E-09	2.987E-09
NNE	5.322E-08	4.589E-08	3.275E-08	2.353E-08	1.945E-08	2.570E-08	1.315E-08	6.602E-09	4.241E-09	3.058E-09
NE	2.677E-08	3.433E-08	2.741E-08	2.004E-08	1.639E-08	2.175E-08	1.123E-08	5.692E-09	3.733E-09	2.718E-09
ENE	2.189E-08	2.192E-08	1.636E-08	1.168E-08	9.309E-09	1.121E-08	5.849E-09	3.070E-09	2.115E-09	1.548E-09
E	9.839E-09	1.627E-08	1.420E-08	1.086E-08	9.152E-09	1.056E-08	5.307E-09	2.679E-09	1.735E-09	1.286E-09
ESE	1.758E-08	2.685E-08	2.166E-08	1.563E-08	1.238E-08	1.195E-08	5.870E-09	2.994E-09	1.931E-09	1.395E-09
SE	3.085E-08	5.194E-08	4.217E-08	3.025E-08	2.251E-08	1.246E-08	6.182E-09	3.577E-09	2.446E-09	1.771E-09
SSE	4.619E-08	6.010E-08	4.472E-08	3.084E-08	2.366E-08	2.006E-08	8.991E-09	4.357E-09	2.738E-09	1.944E-09

ERP ELEVATED STACK RELEASES - JAN-JUN 2012
2.260 DAY DECAY, UNDEPLETED
CORRECTED USING STANDARD OPEN TERRAIN FACTORS

ANNUAL AVERAGE CHI/Q (SEC/METER CUBED) DISTANCE IN MILES FROM THE SITE

SECTOR	.250	.500	.750	1.000	1.500	2.000	2.500	3.000	3.500	4.000	4.500
S	1.574E-10	1.116E-08	3.845E-08	5.709E-08	6.434E-08	5.614E-08	4.657E-08	3.858E-08	3.232E-08	3.672E-08	3.980E-08
SSW	5.024E-11	4.687E-09	1.680E-08	2.604E-08	3.214E-08	3.006E-08	2.624E-08	3.059E-08	3.285E-08	2.906E-08	2.594E-08
SW	1.600E-11	2.255E-09	2.255E-08	5.272E-08	8.456E-08	5.730E-08	4.145E-08	3.158E-08	2.504E-08	2.047E-08	1.715E-08
WSW	4.644E-11	3.493E-09	3.005E-08	7.009E-08	1.108E-07	7.060E-08	4.944E-08	3.696E-08	2.895E-08	2.349E-08	1.957E-08
W	5.436E-10	4.909E-08	1.683E-07	1.927E-07	1.562E-07	9.405E-08	6.310E-08	4.560E-08	3.474E-08	2.752E-08	2.247E-08
WNW	1.857E-10	1.479E-08	9.648E-08	1.629E-07	1.946E-07	1.189E-07	8.085E-08	6.213E-08	4.990E-08	3.968E-08	3.252E-08
NW	1.805E-08	5.596E-08	1.328E-07	2.311E-07	3.592E-07	2.113E-07	1.402E-07	1.029E-07	7.949E-08	6.266E-08	5.098E-08
NNW	3.480E-08	7.947E-08	1.059E-07	1.192E-07	1.400E-07	1.322E-07	1.228E-07	1.111E-07	1.007E-07	7.950E-08	6.480E-08
N	1.196E-07	1.471E-07	1.412E-07	1.126E-07	8.575E-08	6.939E-08	5.687E-08	4.654E-08	3.888E-08	3.307E-08	2.858E-08
NNE	1.506E-08	4.327E-08	5.778E-08	5.467E-08	4.782E-08	3.983E-08	3.296E-08	2.759E-08	2.346E-08	2.026E-08	1.775E-08
NE	1.218E-09	1.263E-08	2.673E-08	3.382E-08	3.669E-08	3.262E-08	2.768E-08	2.341E-08	1.997E-08	1.725E-08	1.508E-08
ENE	8.025E-09	1.670E-08	2.262E-08	2.388E-08	2.321E-08	1.984E-08	1.648E-08	1.375E-08	1.162E-08	9.969E-09	8.672E-09
E	3.173E-11	2.374E-09	9.041E-09	1.415E-08	1.744E-08	1.637E-08	1.437E-08	1.246E-08	1.084E-08	9.515E-09	8.433E-09
ESE	7.565E-11	4.592E-09	1.635E-08	2.496E-08	2.911E-08	2.596E-08	2.189E-08	1.838E-08	1.559E-08	1.339E-08	1.165E-08
SE	4.383E-11	4.040E-09	2.717E-08	4.695E-08	5.667E-08	5.068E-08	4.269E-08	3.575E-08	3.021E-08	2.584E-08	2.238E-08
SSE	2.661E-10	1.601E-08	4.552E-08	6.169E-08	6.513E-08	5.529E-08	4.514E-08	3.699E-08	3.074E-08	2.596E-08	2.226E-08

ANNUAL AVERAGE CHI/Q (SEC/METER CUBED) DISTANCE IN MILES FROM THE SITE

SECTOR	5.000	7.500	10.000	15.000	20.000	25.000	30.000	35.000	40.000	45.000	50.000
S	3.554E-08	2.513E-08	1.638E-08	9.415E-09	6.694E-09	5.093E-09	3.947E-09	3.181E-09	2.666E-09	2.274E-09	1.958E-09
SSW	2.408E-08	1.801E-08	1.163E-08	6.597E-09	4.600E-09	3.399E-09	2.618E-09	2.098E-09	1.731E-09	1.460E-09	1.252E-09
SW	1.578E-08	1.150E-08	7.489E-09	4.288E-09	2.983E-09	2.233E-09	1.755E-09	1.407E-09	1.161E-09	9.791E-10	8.401E-10
WSW	1.759E-08	1.247E-08	9.182E-09	5.838E-09	3.917E-09	2.872E-09	2.227E-09	1.793E-09	1.485E-09	1.256E-09	1.081E-09
W	1.879E-08	9.909E-09	6.818E-09	4.228E-09	3.025E-09	2.201E-09	1.689E-09	1.349E-09	1.110E-09	9.333E-10	7.989E-10
WNW	2.764E-08	1.558E-08	1.063E-08	6.472E-09	4.413E-09	3.271E-09	2.567E-09	2.078E-09	1.721E-09	1.453E-09	1.248E-09
NW	4.295E-08	2.337E-08	1.564E-08	9.239E-09	6.172E-09	4.516E-09	3.539E-09	2.858E-09	2.368E-09	2.005E-09	1.728E-09
NNW	5.533E-08	3.145E-08	2.042E-08	1.169E-08	7.887E-09	5.808E-09	4.560E-09	3.710E-09	3.126E-09	2.665E-09	2.296E-09
N	2.512E-08	1.556E-08	1.255E-08	9.611E-09	7.818E-09	6.321E-09	4.937E-09	3.994E-09	3.319E-09	2.818E-09	2.434E-09
NNE	1.999E-08	3.360E-08	2.184E-08	1.255E-08	8.495E-09	6.276E-09	4.900E-09	3.972E-09	3.310E-09	2.817E-09	2.437E-09
NE	1.654E-08	2.848E-08	1.856E-08	1.070E-08	7.256E-09	5.367E-09	4.251E-09	3.480E-09	2.924E-09	2.487E-09	2.151E-09
ENE	9.131E-09	1.430E-08	9.483E-09	5.569E-09	3.812E-09	2.837E-09	2.348E-09	1.972E-09	1.641E-09	1.395E-09	1.205E-09
E	9.321E-09	1.334E-08	8.755E-09	5.072E-09	3.440E-09	2.543E-09	1.985E-09	1.608E-09	1.375E-09	1.190E-09	1.027E-09
ESE	1.199E-08	1.451E-08	9.600E-09	5.609E-09	3.821E-09	2.832E-09	2.214E-09	1.795E-09	1.496E-09	1.273E-09	1.100E-09
SE	1.962E-08	1.190E-08	9.018E-09	6.211E-09	4.441E-09	3.429E-09	2.781E-09	2.331E-09	1.933E-09	1.638E-09	1.411E-09
SSE	2.272E-08	2.396E-08	1.529E-08	8.573E-09	5.701E-09	4.156E-09	3.211E-09	2.580E-09	2.135E-09	1.805E-09	1.553E-09

CHI/Q (SEC/METER CUBED) FOR EACH SEGMENT

SEGMENT BOUNDARIES IN MILES FROM THE SITE

DIRECTION FROM SITE	.5-1	1-2	2-3	3-4	4-5	5-10	10-20	20-30	30-40	40-50
S	4.067E-08	5.908E-08	4.593E-08	3.578E-08	3.731E-08	2.356E-08	9.754E-09	5.062E-09	3.203E-09	2.273E-09
SSW	1.821E-08	2.986E-08	2.900E-08	3.076E-08	2.618E-08	1.653E-08	6.828E-09	3.407E-09	2.107E-09	1.463E-09
SW	3.145E-08	6.537E-08	4.173E-08	2.517E-08	1.762E-08	1.067E-08	4.419E-09	2.242E-09	1.413E-09	9.815E-10
WSW	4.195E-08	8.389E-08	5.009E-08	2.916E-08	2.000E-08	1.215E-08	5.727E-09	2.893E-09	1.800E-09	1.259E-09
W	1.527E-07	1.367E-07	6.435E-08	3.509E-08	2.261E-08	1.051E-08	4.269E-09	2.216E-09	1.355E-09	9.357E-10
WNW	1.078E-07	1.539E-07	8.350E-08	4.950E-08	3.283E-08	1.606E-08	6.481E-09	3.294E-09	2.082E-09	1.457E-09
NW	1.594E-07	2.650E-07	1.442E-07	7.977E-08	5.147E-08	2.429E-08	9.299E-09	4.567E-09	2.866E-09	2.010E-09
NNW	1.059E-07	1.319E-07	1.206E-07	9.557E-08	6.565E-08	3.185E-08	1.194E-08	5.863E-09	3.730E-09	2.665E-09
N	1.298E-07	8.445E-08	5.607E-08	3.886E-08	2.863E-08	1.635E-08	9.467E-09	6.167E-09	4.006E-09	2.824E-09
NNE	5.317E-08	4.579E-08	3.264E-08	2.342E-08	1.932E-08	2.535E-08	1.281E-08	6.317E-09	3.985E-09	2.822E-09
NE	2.675E-08	3.424E-08	2.729E-08	1.992E-08	1.626E-08	2.142E-08	1.092E-08	5.425E-09	3.489E-09	2.492E-09
ENE	2.186E-08	2.186E-08	1.629E-08	1.160E-08	9.226E-09	1.101E-08	5.658E-09	2.901E-09	1.954E-09	1.398E-09
E	9.829E-09	1.623E-08	1.414E-08	1.080E-08	9.083E-09	1.041E-08	5.165E-09	2.559E-09	1.627E-09	1.184E-09
ESE	1.756E-08	2.679E-08	2.157E-08	1.555E-08	1.229E-08	1.177E-08	5.701E-09	2.848E-09	1.801E-09	1.275E-09
SE	3.082E-08	5.185E-08	4.204E-08	3.013E-08	2.238E-08	1.233E-08	6.048E-09	3.439E-09	2.308E-09	1.641E-09
SSE	4.615E-08	5.999E-08	4.458E-08	3.070E-08	2.353E-08	1.983E-08	8.790E-09	4.190E-09	2.591E-09	1.809E-09

ERP ELEVATED STACK RELEASES - JAN-JUN 2012
8.000 DAY DECAY, DEPLETED
CORRECTED USING STANDARD OPEN TERRAIN FACTORS

ANNUAL AVERAGE CHI/Q (SEC/METER CUBED) DISTANCE IN MILES FROM THE SITE

SECTOR	.250	.500	.750	1.000	1.500	2.000	2.500	3.000	3.500	4.000	4.500
S	1.574E-10	1.108E-08	3.814E-08	5.680E-08	6.367E-08	5.516E-08	4.544E-08	3.740E-08	3.116E-08	3.537E-08	3.838E-08
SSW	5.025E-11	4.653E-09	1.666E-08	2.591E-08	3.185E-08	2.963E-08	2.574E-08	2.998E-08	3.220E-08	2.843E-08	2.534E-08
SW	1.601E-11	2.241E-09	2.249E-08	5.269E-08	8.375E-08	5.631E-08	4.051E-08	3.073E-08	2.428E-08	1.980E-08	1.655E-08
WSW	4.645E-11	3.468E-09	2.995E-08	6.992E-08	1.096E-07	6.930E-08	4.828E-08	3.595E-08	2.808E-08	2.272E-08	1.890E-08
W	5.437E-10	4.876E-08	1.671E-07	1.901E-07	1.527E-07	9.108E-08	6.067E-08	4.358E-08	3.303E-08	2.606E-08	2.120E-08
WNW	1.857E-10	1.471E-08	9.613E-08	1.614E-07	1.915E-07	1.160E-07	7.842E-08	6.007E-08	4.814E-08	3.813E-08	3.111E-08
NW	1.805E-08	5.549E-08	1.311E-07	2.289E-07	3.548E-07	2.073E-07	1.368E-07	1.001E-07	7.708E-08	6.052E-08	4.901E-08
NNW	3.481E-08	7.879E-08	1.042E-07	1.176E-07	1.381E-07	1.300E-07	1.207E-07	1.092E-07	9.903E-08	7.794E-08	6.327E-08
N	1.196E-07	1.458E-07	1.384E-07	1.102E-07	8.379E-08	6.761E-08	5.523E-08	4.504E-08	3.750E-08	3.181E-08	2.742E-08
NNE	1.507E-08	4.291E-08	5.674E-08	5.371E-08	4.692E-08	3.894E-08	3.210E-08	2.677E-08	2.269E-08	1.954E-08	1.708E-08
NE	1.218E-09	1.252E-08	2.639E-08	3.350E-08	3.624E-08	3.206E-08	2.706E-08	2.278E-08	1.936E-08	1.665E-08	1.452E-08
ENE	8.027E-09	1.656E-08	2.226E-08	2.356E-08	2.286E-08	1.945E-08	1.607E-08	1.334E-08	1.122E-08	9.585E-09	8.309E-09
E	3.173E-11	2.357E-09	8.978E-09	1.409E-08	1.729E-08	1.614E-08	1.411E-08	1.219E-08	1.057E-08	9.255E-09	8.185E-09
ESE	7.566E-11	4.558E-09	1.623E-08	2.485E-08	2.883E-08	2.553E-08	2.140E-08	1.786E-08	1.507E-08	1.289E-08	1.117E-08
SE	4.384E-11	4.019E-09	2.710E-08	4.690E-08	5.621E-08	4.989E-08	4.175E-08	3.476E-08	2.922E-08	2.488E-08	2.147E-08
SSE	2.661E-10	1.589E-08	4.506E-08	6.125E-08	6.434E-08	5.423E-08	4.396E-08	3.578E-08	2.955E-08	2.481E-08	2.117E-08

ANNUAL AVERAGE CHI/Q (SEC/METER CUBED) DISTANCE IN MILES FROM THE SITE

SECTOR	5.000	7.500	10.000	15.000	20.000	25.000	30.000	35.000	40.000	45.000	50.000
S	3.421E-08	2.391E-08	1.515E-08	8.230E-09	5.490E-09	3.970E-09	2.966E-09	2.315E-09	1.890E-09	1.578E-09	1.333E-09
SSW	2.352E-08	1.740E-08	1.092E-08	5.838E-09	3.826E-09	2.740E-09	2.057E-09	1.612E-09	1.304E-09	1.080E-09	9.120E-10
SW	1.523E-08	1.103E-08	6.981E-09	3.773E-09	2.456E-09	1.742E-09	1.331E-09	1.042E-09	8.417E-10	6.966E-10	5.876E-10
WSW	1.699E-08	1.192E-08	8.574E-09	5.223E-09	3.389E-09	2.419E-09	1.834E-09	1.449E-09	1.180E-09	9.833E-10	8.348E-10
W	1.766E-08	9.191E-09	6.252E-09	3.718E-09	2.550E-09	1.804E-09	1.351E-09	1.057E-09	8.538E-10	7.066E-10	5.960E-10
WNW	2.634E-08	1.448E-08	9.623E-09	5.539E-09	3.531E-09	2.493E-09	1.896E-09	1.498E-09	1.214E-09	1.006E-09	8.492E-10
NW	4.110E-08	2.175E-08	1.414E-08	7.904E-09	5.044E-09	3.553E-09	2.703E-09	2.128E-09	1.724E-09	1.430E-09	1.209E-09
NNW	5.380E-08	2.979E-08	1.876E-08	1.008E-08	6.311E-09	4.370E-09	3.261E-09	2.555E-09	2.096E-09	1.748E-09	1.476E-09
N	2.404E-08	1.476E-08	1.191E-08	9.168E-09	7.333E-09	5.697E-09	4.342E-09	3.437E-09	2.801E-09	2.338E-09	1.987E-09
NNE	1.932E-08	3.285E-08	2.071E-08	1.129E-08	7.267E-09	5.153E-09	3.885E-09	3.055E-09	2.478E-09	2.058E-09	1.741E-09
NE	1.596E-08	2.783E-08	1.760E-08	9.625E-09	6.200E-09	4.399E-09	3.377E-09	2.700E-09	2.223E-09	1.856E-09	1.579E-09
ENE	8.763E-09	1.398E-08	9.011E-09	4.989E-09	3.185E-09	2.238E-09	1.763E-09	1.428E-09	1.158E-09	9.618E-10	8.135E-10
E	9.072E-09	1.309E-08	8.338E-09	4.539E-09	2.860E-09	1.990E-09	1.475E-09	1.142E-09	9.363E-10	7.825E-10	6.575E-10
ESE	1.150E-08	1.409E-08	9.067E-09	5.004E-09	3.190E-09	2.237E-09	1.668E-09	1.297E-09	1.041E-09	8.558E-10	7.170E-10
SE	1.874E-08	1.122E-08	8.459E-09	5.817E-09	4.155E-09	3.216E-09	2.621E-09	2.202E-09	1.798E-09	1.504E-09	1.280E-09
SSE	2.158E-08	2.281E-08	1.412E-08	7.516E-09	4.772E-09	3.349E-09	2.503E-09	1.954E-09	1.576E-09	1.301E-09	1.096E-09

CHI/Q (SEC/METER CUBED) FOR EACH SEGMENT
SEGMENT BOUNDARIES IN MILES FROM THE SITE

DIRECTION FROM SITE	.5-1	1-2	2-3	3-4	4-5	5-10	10-20	20-30	30-40	40-50
S	4.042E-08	5.836E-08	4.482E-08	3.455E-08	3.594E-08	2.231E-08	8.551E-09	3.974E-09	2.339E-09	1.580E-09
SSW	1.811E-08	2.954E-08	2.848E-08	3.013E-08	2.558E-08	1.588E-08	6.073E-09	2.757E-09	1.622E-09	1.084E-09
SW	3.141E-08	6.465E-08	4.081E-08	2.441E-08	1.702E-08	1.016E-08	3.901E-09	1.768E-09	1.048E-09	6.992E-10
WSW	4.183E-08	8.286E-08	4.895E-08	2.829E-08	1.933E-08	1.156E-08	5.153E-09	2.444E-09	1.456E-09	9.865E-10
W	1.510E-07	1.336E-07	6.194E-08	3.339E-08	2.133E-08	9.768E-09	3.762E-09	1.822E-09	1.064E-09	7.093E-10
WNW	1.071E-07	1.512E-07	8.110E-08	4.773E-08	3.142E-08	1.496E-08	5.554E-09	2.531E-09	1.504E-09	1.010E-09
NW	1.578E-07	2.613E-07	1.409E-07	7.734E-08	4.949E-08	2.267E-08	8.019E-09	3.611E-09	2.139E-09	1.435E-09
NNW	1.045E-07	1.300E-07	1.186E-07	9.389E-08	6.411E-08	3.022E-08	1.033E-08	4.444E-09	2.582E-09	1.750E-09
N	1.275E-07	8.247E-08	5.446E-08	3.749E-08	2.747E-08	1.555E-08	8.961E-09	5.591E-09	3.454E-09	2.345E-09
NNE	5.232E-08	4.488E-08	3.179E-08	2.265E-08	1.864E-08	2.445E-08	1.160E-08	5.210E-09	3.072E-09	2.065E-09
NE	2.647E-08	3.377E-08	2.668E-08	1.930E-08	1.568E-08	2.064E-08	9.875E-09	4.470E-09	2.712E-09	1.862E-09
ENE	2.157E-08	2.150E-08	1.588E-08	1.120E-08	8.855E-09	1.061E-08	5.081E-09	2.301E-09	1.421E-09	9.651E-10
E	9.779E-09	1.606E-08	1.388E-08	1.053E-08	8.831E-09	1.009E-08	4.637E-09	2.016E-09	1.159E-09	7.818E-10
ESE	1.747E-08	2.648E-08	2.109E-08	1.504E-08	1.180E-08	1.128E-08	5.101E-09	2.263E-09	1.306E-09	8.593E-10
SE	3.077E-08	5.133E-08	4.113E-08	2.915E-08	2.147E-08	1.167E-08	5.665E-09	3.228E-09	2.168E-09	1.508E-09
SSE	4.577E-08	5.916E-08	4.342E-08	2.953E-08	2.240E-08	1.867E-08	7.764E-09	3.390E-09	1.967E-09	1.307E-09

ERP ELEVATED STACK RELEASES - JAN-JUN 2012
CORRECTED USING STANDARD OPEN TERRAIN FACTORS

********** RELATIVE DEPOSITION PER UNIT AREA (M**-2) AT FIXED POINTS BY DOWNWIND SECTORS **********

DIRECTION FROM SITE	DISTANCES IN MILES .25	.50	.75	1.00	1.50	2.00	2.50	3.00	3.50	4.00	4.50
S	1.551E-09	1.842E-09	2.423E-09	2.167E-09	1.260E-09	8.259E-10	5.772E-10	4.218E-10	3.186E-10	2.597E-10	2.372E-10
SSW	4.396E-10	6.016E-10	8.724E-10	8.099E-10	4.804E-10	3.170E-10	2.222E-10	1.626E-10	1.541E-10	1.165E-10	9.117E-11
SW	1.688E-10	3.343E-10	5.756E-10	5.650E-10	6.751E-10	3.669E-10	2.269E-10	1.538E-10	1.110E-10	8.391E-11	6.564E-11
WSW	4.310E-10	5.499E-10	7.624E-10	1.513E-09	7.819E-10	4.242E-10	2.621E-10	1.777E-10	1.283E-10	9.692E-11	7.583E-11
W	5.826E-10	4.215E-09	3.854E-09	2.491E-09	1.259E-09	6.661E-10	4.055E-10	2.715E-10	1.941E-10	1.456E-10	1.132E-10
WNW	5.865E-10	8.047E-10	3.782E-09	2.612E-09	1.657E-09	8.299E-10	4.904E-10	3.248E-10	2.365E-10	1.804E-10	1.451E-10
NW	5.879E-09	4.733E-09	3.951E-09	4.798E-09	2.807E-09	1.400E-09	8.315E-10	5.555E-10	4.052E-10	3.168E-10	2.617E-10
NNW	8.079E-09	6.399E-09	5.184E-09	3.433E-09	2.614E-09	1.400E-09	8.621E-10	6.847E-10	4.992E-10	3.895E-10	3.209E-10
N	1.982E-08	1.510E-08	1.131E-08	6.935E-09	3.031E-09	1.770E-09	1.165E-09	8.246E-10	6.129E-10	4.721E-10	3.737E-10
NNE	4.570E-09	3.671E-09	3.050E-09	2.066E-09	9.930E-10	6.059E-10	4.084E-10	2.929E-10	2.192E-10	1.693E-10	1.340E-10
NE	1.734E-09	1.584E-09	1.604E-09	1.255E-09	6.734E-10	4.293E-10	2.960E-10	2.148E-10	1.617E-10	1.252E-10	9.911E-11
ENE	1.582E-09	1.350E-09	1.240E-09	9.092E-10	4.659E-10	2.918E-10	1.994E-10	1.440E-10	1.082E-10	8.368E-11	6.626E-11
E	2.959E-10	4.183E-10	6.183E-10	5.779E-10	3.440E-10	2.272E-10	1.594E-10	1.167E-10	8.821E-11	6.842E-11	5.418E-11
ESE	8.374E-10	9.529E-10	1.212E-09	1.068E-09	6.160E-10	4.028E-10	2.811E-10	2.053E-10	1.550E-10	1.202E-10	9.518E-11
SE	5.416E-10	1.213E-09	2.175E-09	2.159E-09	1.323E-09	8.821E-10	6.214E-10	4.559E-10	3.450E-10	2.677E-10	2.120E-10
SSE	2.735E-09	2.840E-09	3.324E-09	2.818E-09	1.590E-09	1.032E-09	7.177E-10	5.232E-10	3.947E-10	3.059E-10	2.422E-10

DIRECTION FROM SITE	DISTANCES IN MILES 5.00	7.50	10.00	15.00	20.00	25.00	30.00	35.00	40.00	45.00	50.00
S	1.907E-10	1.336E-10	9.099E-11	5.256E-11	3.317E-11	2.393E-11	1.712E-11	1.282E-11	1.014E-11	8.093E-12	6.606E-12
SSW	7.362E-11	6.975E-11	5.072E-11	3.090E-11	1.810E-11	1.255E-11	8.991E-12	6.752E-12	5.274E-12	4.213E-12	3.439E-12
SW	5.277E-11	4.510E-11	3.213E-11	1.926E-11	1.223E-11	8.218E-12	5.830E-12	4.378E-12	3.404E-12	2.719E-12	2.219E-12
WSW	6.119E-11	4.460E-11	3.072E-11	1.964E-11	1.189E-11	7.971E-12	5.732E-12	4.304E-12	3.346E-12	2.673E-12	2.182E-12
W	9.087E-11	4.066E-11	3.845E-11	2.201E-11	1.558E-11	1.053E-11	7.544E-12	5.665E-12	4.405E-12	3.519E-12	2.872E-12
WNW	1.234E-10	6.980E-11	4.822E-11	2.819E-11	1.868E-11	1.271E-11	8.990E-12	6.751E-12	5.273E-12	4.212E-12	3.438E-12
NW	2.266E-10	1.379E-10	9.889E-11	6.091E-11	3.698E-11	2.478E-11	1.783E-11	1.339E-11	1.045E-11	8.344E-12	6.811E-12
NNW	2.771E-10	1.671E-10	1.194E-10	7.220E-11	4.645E-11	3.123E-11	2.234E-11	1.610E-11	1.246E-11	9.951E-12	8.123E-12
N	3.023E-10	1.449E-10	8.949E-11	4.855E-11	7.865E-11	5.082E-11	3.639E-11	2.732E-11	2.124E-11	1.697E-11	1.385E-11
NNE	1.082E-10	1.778E-10	1.101E-10	5.712E-11	3.485E-11	2.333E-11	1.667E-11	1.247E-11	9.671E-12	7.707E-12	6.279E-12
NE	7.994E-11	1.410E-10	8.760E-11	4.563E-11	2.787E-11	1.865E-11	1.317E-11	9.827E-12	7.642E-12	6.134E-12	5.007E-12
ENE	5.347E-11	5.852E-11	4.241E-11	2.584E-11	1.657E-11	1.107E-11	7.835E-12	5.494E-12	4.272E-12	3.414E-12	2.788E-12
E	4.366E-11	5.886E-11	4.392E-11	2.729E-11	1.749E-11	1.158E-11	8.120E-12	5.943E-12	4.523E-12	3.570E-12	2.902E-12
ESE	7.671E-11	7.859E-11	5.591E-11	3.350E-11	2.132E-11	1.418E-11	1.001E-11	7.379E-12	5.653E-12	4.465E-12	3.611E-12
SE	1.708E-10	8.089E-11	4.932E-11	2.594E-11	1.580E-11	1.085E-11	8.088E-12	1.527E-11	1.172E-11	9.274E-12	7.521E-12
SSE	1.953E-10	2.037E-10	1.243E-10	6.345E-11	3.852E-11	2.581E-11	1.847E-11	1.385E-11	1.076E-11	8.590E-12	7.008E-12

********** RELATIVE DEPOSITION PER UNIT AREA (M**-2) BY DOWNWIND SECTORS **********

DIRECTION FROM SITE	SEGMENT BOUNDARIES IN MILES .5-1	1-2	2-3	3-4	4-5	5-10	10-20	20-30	30-40	40-50
S	2.180E-09	1.268E-09	5.814E-10	3.256E-10	2.266E-10	1.273E-10	5.248E-11	2.367E-11	1.303E-11	8.149E-12
SSW	7.845E-10	4.810E-10	2.237E-10	1.422E-10	9.218E-11	6.215E-11	2.962E-11	1.261E-11	6.829E-12	4.241E-12
SW	5.172E-10	5.137E-10	2.350E-10	1.129E-10	6.629E-11	4.104E-11	1.900E-11	8.334E-12	4.422E-12	2.737E-12
WSW	1.049E-09	7.855E-10	2.716E-10	1.304E-10	7.666E-11	4.212E-11	1.866E-11	8.120E-12	4.347E-12	2.691E-12
W	3.328E-09	1.269E-09	4.214E-10	1.977E-10	1.145E-10	5.083E-11	2.281E-11	1.068E-11	5.722E-12	3.542E-12
WNW	2.600E-09	1.502E-09	5.147E-10	2.404E-10	1.475E-10	7.213E-11	2.841E-11	1.281E-11	6.828E-12	4.240E-12
NW	4.501E-09	2.624E-09	8.727E-10	4.144E-10	2.650E-10	1.403E-10	5.871E-11	2.525E-11	1.354E-11	8.399E-12
NNW	4.676E-09	2.256E-09	9.345E-10	5.104E-10	3.250E-10	1.704E-10	7.125E-11	3.173E-11	1.649E-11	1.002E-11
N	1.021E-08	3.338E-09	1.190E-09	6.197E-10	3.764E-10	1.553E-10	7.102E-11	5.247E-11	2.760E-11	1.708E-11
NNE	2.751E-09	1.059E-09	4.148E-10	2.212E-10	1.349E-10	1.322E-10	5.899E-11	2.374E-11	1.260E-11	7.760E-12
NE	1.444E-09	6.942E-10	2.990E-10	1.629E-10	9.973E-11	1.037E-10	4.707E-11	1.892E-11	9.950E-12	6.163E-12
ENE	1.117E-09	4.870E-10	2.019E-10	1.091E-10	6.669E-11	5.024E-11	2.540E-11	1.124E-11	5.697E-12	3.436E-12
E	5.559E-10	3.441E-10	1.604E-10	8.880E-11	5.450E-11	4.884E-11	2.663E-11	1.177E-11	6.024E-12	3.605E-12
ESE	1.090E-09	6.217E-10	2.832E-10	1.561E-10	9.575E-11	6.809E-11	3.307E-11	1.442E-11	7.473E-12	4.501E-12
SE	1.954E-09	1.313E-09	6.247E-10	3.472E-10	2.133E-10	8.684E-11	2.663E-11	1.106E-11	1.186E-11	9.349E-12
SSE	2.991E-09	1.615E-09	7.237E-10	3.976E-10	2.437E-10	1.665E-10	6.590E-11	2.626E-11	1.399E-11	8.647E-12

ERP ELEVATED STACK RELEASES - JAN-JUN 2012
CORRECTED USING STANDARD OPEN TERRAIN FACTORS
SPECIFIC POINTS OF INTEREST

RELEASE ID	TYPE OF LOCATION	DIRECTION FROM SITE	DIST. (MI)	X/Q (SEC/M3) NO DECAY UNDEPLETED	X/Q (SEC/M3) 2.26 DAY DECAY UNDEPLETED	X/Q (SEC/M3) 8.0 DAY DECAY DEPLETED	D/Q (PER SQ.METER)
A	Site Boundary	S	.80	4.3E-08	4.3E-08	4.3E-08	2.4E-09
A	Site Boundary	SSW	.82	2.0E-08	2.0E-08	2.0E-08	8.8E-10
A	Site Boundary	SW	.97	5.0E-08	5.0E-08	5.0E-08	5.8E-10
A	Site Boundary	WSW	.93	5.9E-08	5.9E-08	5.9E-08	1.4E-09
A	Site Boundary	W	.91	1.9E-07	1.9E-07	1.9E-07	2.9E-09
A	Site Boundary	WNW	.94	1.5E-07	1.5E-07	1.5E-07	2.9E-09
A	Site Boundary	NW	.81	1.6E-07	1.6E-07	1.5E-07	3.6E-09
A	Site Boundary	NNW	.69	9.7E-08	9.7E-08	9.6E-08	5.4E-09
A	Site Boundary	N	.67	1.4E-07	1.4E-07	1.4E-07	1.2E-08
A	Site Boundary	NNE	.60	5.0E-08	4.9E-08	4.9E-08	3.4E-09
A	Site Boundary	NE	.62	1.9E-08	1.9E-08	1.9E-08	1.6E-09
A	Site Boundary	ENE	.59	1.8E-08	1.8E-08	1.8E-08	1.3E-09
A	Site Boundary	E	.53	2.8E-09	2.8E-09	2.8E-09	4.4E-10
A	Site Boundary	ESE	.54	5.8E-09	5.8E-09	5.7E-09	9.8E-10
A	Site Boundary	SE	.65	1.5E-08	1.5E-08	1.5E-08	1.8E-09
A	Site Boundary	SSE	.81	5.1E-08	5.1E-08	5.0E-08	3.3E-09
A	Nearest Res	SSW	3.00	3.1E-08	3.1E-08	3.0E-08	1.6E-10
A	Nearest Res	SW	1.30	7.7E-08	7.7E-08	7.7E-08	9.0E-10
A	Nearest Res	WSW	1.90	7.7E-08	7.7E-08	7.5E-08	4.7E-10
A	Nearest Res	W	2.90	4.9E-08	4.8E-08	4.6E-08	2.9E-10
A	Nearest Res	WNW	1.70	1.6E-07	1.6E-07	1.5E-07	1.2E-09
A	Nearest Res	NW	.90	1.9E-07	1.9E-07	1.9E-07	5.6E-09
A	Nearest Res	NNW	1.90	1.3E-07	1.3E-07	1.3E-07	1.6E-09
A	Nearest Res	N	3.00	4.7E-08	4.7E-08	4.5E-08	8.2E-10
A	Nearest Res	NNE	1.90	4.1E-08	4.1E-08	4.0E-08	6.6E-10
A	Nearest Res	NE	3.00	2.4E-08	2.3E-08	2.3E-08	2.1E-10
A	Nearest Res	ENE	1.70	2.2E-08	2.2E-08	2.2E-08	3.8E-10
A	Nearest Res	E	2.20	1.6E-08	1.6E-08	1.5E-08	2.0E-10
A	Nearest Res	ESE	2.30	2.4E-08	2.3E-08	2.3E-08	3.2E-10
A	Nearest Res	SE	3.00	3.6E-08	3.6E-08	3.5E-08	4.6E-10
A	Nearest Cow	NNW	3.50	1.0E-07	1.0E-07	9.9E-08	5.0E-10
A	Nearest Garde	SSW	3.00	3.1E-08	3.1E-08	3.0E-08	1.6E-10
A	Nearest Garde	SW	1.30	7.7E-08	7.7E-08	7.7E-08	9.0E-10
A	Nearest Garde	WSW	1.90	7.7E-08	7.7E-08	7.5E-08	4.7E-10
A	Nearest Garde	W	2.90	4.9E-08	4.8E-08	4.6E-08	2.9E-10
A	Nearest Garde	WNW	2.40	8.7E-08	8.7E-08	8.4E-08	5.4E-10
A	Nearest Garde	NW	2.90	1.1E-07	1.1E-07	1.1E-07	6.0E-10
A	Nearest Garde	NNW	2.80	1.2E-07	1.2E-07	1.1E-07	7.9E-10
A	Nearest Garde	ENE	1.70	2.2E-08	2.2E-08	2.2E-08	3.8E-10
A	Nearest Garde	E	2.20	1.6E-08	1.6E-08	1.5E-08	2.0E-10
A	Nearest Garde	ESE	2.30	2.4E-08	2.3E-08	2.3E-08	3.2E-10
A	MAXIMUM CHI/Q	S	1.50	6.4E-08	6.4E-08	6.4E-08	1.3E-09
A	MAXIMUM CHI/Q	SSW	3.50	3.3E-08	3.3E-08	3.2E-08	1.5E-10
A	MAXIMUM CHI/Q	SW	1.50	8.5E-08	8.5E-08	8.4E-08	6.8E-10
A	MAXIMUM CHI/Q	WSW	1.50	1.1E-07	1.1E-07	1.1E-07	7.8E-10
A	MAXIMUM CHI/Q	W	1.00	1.9E-07	1.9E-07	1.9E-07	2.5E-09
A	MAXIMUM CHI/Q	WNW	1.50	2.0E-07	1.9E-07	1.9E-07	1.7E-09
A	MAXIMUM CHI/Q	NW	1.50	3.6E-07	3.6E-07	3.5E-07	2.8E-09
A	MAXIMUM CHI/Q	NNW	1.50	1.4E-07	1.4E-07	1.4E-07	2.6E-09
A	MAXIMUM CHI/Q	N	.50	1.4E-07	1.4E-07	1.4E-07	1.5E-08
A	MAXIMUM CHI/Q	NNE	.75	5.8E-08	5.8E-08	5.7E-08	3.1E-09
A	MAXIMUM CHI/Q	NE	1.50	3.7E-08	3.7E-08	3.6E-08	6.7E-10
A	MAXIMUM CHI/Q	ENE	1.00	2.4E-08	2.4E-08	2.4E-08	9.1E-10
A	MAXIMUM CHI/Q	E	1.50	1.7E-08	1.7E-08	1.7E-08	3.4E-10
A	MAXIMUM CHI/Q	ESE	1.50	2.9E-08	2.9E-08	2.9E-08	6.2E-10
A	MAXIMUM CHI/Q	SE	1.50	5.7E-08	5.7E-08	5.6E-08	1.3E-09
A	MAXIMUM CHI/Q	SSE	1.50	6.5E-08	6.5E-08	6.4E-08	1.6E-09

Atmospheric Diffusion Estimates

Elevated Releases

July-September 2012

B300

ERP ELEVATED STACK RELEASES - JUL-SEP 2012
NO DECAY, UNDEPLETED
CORRECTED USING STANDARD OPEN TERRAIN FACTORS

ANNUAL AVERAGE CHI/Q (SEC/METER CUBED) DISTANCE IN MILES FROM THE SITE

SECTOR	.250	.500	.750	1.000	1.500	2.000	2.500	3.000	3.500	4.000	4.500
S	3.767E-10	2.558E-08	6.951E-08	9.394E-08	1.017E-07	8.817E-08	7.307E-08	6.055E-08	5.079E-08	5.816E-08	6.408E-08
SSW	8.950E-11	7.787E-09	3.013E-08	4.856E-08	5.990E-08	5.481E-08	4.687E-08	5.226E-08	5.454E-08	4.795E-08	4.279E-08
SW	6.335E-11	7.563E-09	3.987E-08	8.558E-08	1.491E-07	1.041E-07	7.671E-08	5.924E-08	4.747E-08	3.916E-08	3.306E-08
WSW	1.311E-10	1.202E-08	5.101E-08	1.058E-07	1.965E-07	1.323E-07	9.603E-08	7.366E-08	5.885E-08	4.850E-08	4.095E-08
W	7.236E-09	6.238E-08	1.398E-07	1.676E-07	1.660E-07	1.078E-07	7.647E-08	5.776E-08	4.564E-08	3.731E-08	3.130E-08
WNW	8.250E-10	4.700E-08	1.466E-07	2.261E-07	2.812E-07	1.740E-07	1.197E-07	9.383E-08	7.704E-08	6.187E-08	5.116E-08
NW	2.077E-08	7.872E-08	1.773E-07	2.866E-07	4.241E-07	2.574E-07	1.758E-07	1.340E-07	1.072E-07	8.617E-08	7.128E-08
NNW	5.184E-08	9.468E-08	1.333E-07	1.505E-07	1.841E-07	1.813E-07	1.787E-07	1.768E-07	1.781E-07	1.428E-07	1.179E-07
N	1.660E-07	2.599E-07	2.214E-07	1.518E-07	9.952E-08	7.751E-08	6.339E-08	5.232E-08	4.423E-08	3.813E-08	3.340E-08
NNE	2.245E-08	1.273E-07	1.676E-07	1.356E-07	9.591E-08	7.244E-08	5.687E-08	4.605E-08	3.826E-08	3.248E-08	2.807E-08
NE	1.016E-10	7.368E-09	1.823E-08	2.335E-08	2.503E-08	2.213E-08	1.880E-08	1.596E-08	1.369E-08	1.190E-08	1.048E-08
ENE	5.690E-17	1.151E-10	2.235E-09	4.643E-09	6.220E-09	5.746E-09	4.921E-09	4.171E-09	3.561E-09	3.076E-09	2.692E-09
E	1.868E-09	5.782E-09	6.086E-09	7.229E-09	8.767E-09	8.336E-09	7.346E-09	6.358E-09	5.509E-09	4.808E-09	4.237E-09
ESE	2.412E-10	1.435E-08	2.271E-08	1.954E-08	1.474E-08	1.141E-08	9.017E-09	7.292E-09	6.031E-09	5.089E-09	4.371E-09
SE	9.532E-10	6.235E-09	1.141E-08	1.363E-08	1.404E-08	1.220E-08	1.025E-08	8.619E-09	7.338E-09	6.334E-09	5.539E-09
SSE	5.306E-11	3.660E-09	1.688E-08	2.777E-08	3.377E-08	3.070E-08	2.626E-08	2.229E-08	1.908E-08	1.651E-08	1.448E-08

ANNUAL AVERAGE CHI/Q (SEC/METER CUBED) DISTANCE IN MILES FROM THE SITE

SECTOR	5.000	7.500	10.000	15.000	20.000	25.000	30.000	35.000	40.000	45.000	50.000
S	5.758E-08	4.167E-08	2.735E-08	1.591E-08	1.146E-08	8.828E-09	6.911E-09	5.624E-09	4.762E-09	4.104E-09	3.568E-09
SSW	4.005E-08	3.433E-08	2.254E-08	1.313E-08	9.604E-09	7.290E-09	5.710E-09	4.650E-09	3.897E-09	3.336E-09	2.904E-09
SW	3.105E-08	2.618E-08	1.746E-08	1.036E-08	7.617E-09	5.946E-09	4.843E-09	3.953E-09	3.318E-09	2.844E-09	2.480E-09
WSW	3.768E-08	2.884E-08	2.188E-08	1.436E-08	9.821E-09	7.330E-09	5.779E-09	4.730E-09	3.979E-09	3.419E-09	2.986E-09
W	2.681E-08	1.547E-08	1.205E-08	8.952E-09	7.292E-09	5.506E-09	4.343E-09	3.558E-09	2.996E-09	2.576E-09	2.251E-09
WNW	4.404E-08	2.620E-08	1.861E-08	1.205E-08	8.491E-09	6.473E-09	5.214E-09	4.314E-09	3.636E-09	3.122E-09	2.725E-09
NW	6.153E-08	3.693E-08	2.664E-08	1.737E-08	1.193E-08	8.933E-09	7.279E-09	6.015E-09	5.066E-09	4.355E-09	3.807E-09
NNW	1.030E-07	6.368E-08	4.221E-08	2.495E-08	1.725E-08	1.298E-08	1.045E-08	8.695E-09	7.512E-09	6.511E-09	5.695E-09
N	2.979E-08	1.969E-08	1.757E-08	1.596E-08	1.442E-08	1.230E-08	9.757E-09	7.994E-09	6.718E-09	5.766E-09	5.031E-09
NNE	3.042E-08	6.212E-08	4.098E-08	2.412E-08	1.666E-08	1.253E-08	9.943E-09	8.184E-09	6.917E-09	5.967E-09	5.230E-09
NE	1.189E-08	2.063E-08	1.347E-08	7.802E-09	5.320E-09	3.962E-09	3.150E-09	2.592E-09	2.190E-09	1.877E-09	1.636E-09
ENE	2.875E-09	5.641E-09	3.808E-09	2.297E-09	1.606E-09	1.217E-09	1.038E-09	8.924E-10	7.532E-10	6.490E-10	5.682E-10
E	4.546E-09	1.379E-08	9.573E-09	5.978E-09	4.271E-09	3.288E-09	2.655E-09	2.216E-09	2.036E-09	1.863E-09	1.639E-09
ESE	4.373E-09	7.636E-09	5.295E-09	3.306E-09	2.365E-09	1.822E-09	1.472E-09	1.228E-09	1.050E-09	9.146E-10	8.083E-10
SE	4.903E-09	3.121E-09	2.587E-09	2.381E-09	2.086E-09	1.944E-09	1.862E-09	1.799E-09	1.551E-09	1.360E-09	1.209E-09
SSE	1.604E-08	3.332E-08	2.198E-08	1.292E-08	8.896E-09	6.675E-09	5.286E-09	4.343E-09	3.666E-09	3.159E-09	2.766E-09

CHI/Q (SEC/METER CUBED) FOR EACH SEGMENT
SEGMENT BOUNDARIES IN MILES FROM THE SITE

DIRECTION FROM SITE	.5-1	1-2	2-3	3-4	4-5	5-10	10-20	20-30	30-40	40-50
S	7.061E-08	9.397E-08	7.209E-08	5.639E-08	5.992E-08	3.884E-08	1.648E-08	8.764E-09	5.663E-09	4.101E-09
SSW	3.336E-08	5.512E-08	5.114E-08	5.138E-08	4.331E-08	3.036E-08	1.365E-08	7.275E-09	4.666E-09	3.342E-09
SW	5.301E-08	1.150E-07	7.702E-08	4.767E-08	3.412E-08	2.338E-08	1.072E-08	5.950E-09	3.965E-09	2.850E-09
WSW	6.669E-08	1.478E-07	9.676E-08	5.914E-08	4.197E-08	2.771E-08	1.402E-08	7.374E-09	4.744E-09	3.425E-09
W	1.349E-07	1.405E-07	7.734E-08	4.593E-08	3.142E-08	1.647E-08	8.904E-09	5.517E-09	3.568E-09	2.580E-09
WNW	1.598E-07	2.213E-07	1.239E-07	7.606E-08	5.170E-08	2.679E-08	1.193E-08	6.507E-09	4.313E-09	3.127E-09
NW	2.040E-07	3.195E-07	1.808E-07	1.068E-07	7.208E-08	3.783E-08	1.701E-08	9.069E-09	6.014E-09	4.363E-09
NNW	1.324E-07	1.754E-07	1.786E-07	1.643E-07	1.198E-07	6.289E-08	2.537E-08	1.311E-08	8.745E-09	6.505E-09
N	1.990E-07	1.014E-07	6.272E-08	4.422E-08	3.347E-08	2.099E-08	1.563E-08	1.185E-08	8.011E-09	5.776E-09
NNE	1.445E-07	9.431E-08	5.669E-08	3.829E-08	3.025E-08	4.568E-08	2.455E-08	1.260E-08	8.204E-09	5.976E-09
NE	1.809E-08	2.337E-08	1.855E-08	1.366E-08	1.142E-08	1.550E-08	7.958E-09	3.999E-09	2.598E-09	1.881E-09
ENE	2.834E-09	5.659E-09	4.841E-09	3.551E-09	2.873E-09	4.212E-09	2.326E-09	1.249E-09	8.810E-10	6.500E-10
E	6.526E-09	8.234E-09	7.215E-09	5.484E-09	4.521E-09	9.861E-09	6.018E-09	3.297E-09	2.273E-09	1.831E-09
ESE	1.944E-08	1.433E-08	8.966E-09	6.032E-09	4.584E-09	5.870E-09	3.330E-09	1.827E-09	1.230E-09	9.154E-10
SE	1.125E-08	1.313E-08	1.012E-08	7.322E-09	5.539E-09	3.279E-09	2.296E-09	1.949E-09	1.723E-09	1.361E-09
SSE	1.878E-08	3.107E-08	2.586E-08	1.902E-08	1.566E-08	2.444E-08	1.314E-08	6.711E-09	4.355E-09	3.164E-09

ERP ELEVATED STACK RELEASES - JUL-SEP 2012
2.260 DAY DECAY, UNDEPLETED
CORRECTED USING STANDARD OPEN TERRAIN FACTORS

ANNUAL AVERAGE CHI/Q (SEC/METER CUBED) DISTANCE IN MILES FROM THE SITE

SECTOR	.250	.500	.750	1.000	1.500	2.000	2.500	3.000	3.500	4.000	4.500
S	3.766E-10	2.556E-08	6.944E-08	9.381E-08	1.015E-07	8.790E-08	7.278E-08	6.026E-08	5.050E-08	5.778E-08	6.361E-08
SSW	8.947E-11	7.780E-09	3.010E-08	4.847E-08	5.973E-08	5.460E-08	4.665E-08	5.196E-08	5.419E-08	4.761E-08	4.245E-08
SW	6.332E-11	7.555E-09	3.981E-08	8.541E-08	1.486E-07	1.037E-07	7.631E-08	5.887E-08	4.712E-08	3.883E-08	3.275E-08
WSW	1.310E-10	1.201E-08	5.092E-08	1.055E-07	1.958E-07	1.316E-07	9.542E-08	7.310E-08	5.833E-08	4.801E-08	4.048E-08
W	7.232E-09	6.231E-08	1.395E-07	1.672E-07	1.653E-07	1.072E-07	7.594E-08	5.727E-08	4.519E-08	3.689E-08	3.090E-08
WNW	8.247E-10	4.696E-08	1.464E-07	2.256E-07	2.804E-07	1.733E-07	1.191E-07	9.324E-08	7.646E-08	6.134E-08	5.067E-08
NW	2.077E-08	7.868E-08	1.771E-07	2.862E-07	4.230E-07	2.565E-07	1.750E-07	1.333E-07	1.066E-07	8.555E-08	7.071E-08
NNW	5.183E-08	9.461E-08	1.332E-07	1.503E-07	1.837E-07	1.807E-07	1.780E-07	1.760E-07	1.771E-07	1.419E-07	1.170E-07
N	1.659E-07	2.598E-07	2.212E-07	1.516E-07	9.931E-08	7.729E-08	6.316E-08	5.209E-08	4.401E-08	3.792E-08	3.319E-08
NNE	2.245E-08	1.273E-07	1.675E-07	1.355E-07	9.570E-08	7.221E-08	5.664E-08	4.583E-08	3.805E-08	3.226E-08	2.787E-08
NE	1.016E-10	7.364E-09	1.821E-08	2.332E-08	2.497E-08	2.206E-08	1.872E-08	1.587E-08	1.361E-08	1.182E-08	1.040E-08
ENE	5.688E-17	1.150E-10	2.232E-09	4.634E-09	6.202E-09	5.724E-09	4.898E-09	4.147E-09	3.538E-09	3.053E-09	2.669E-09
E	1.867E-09	5.778E-09	6.078E-09	7.211E-09	8.729E-09	8.285E-09	7.289E-09	6.297E-09	5.447E-09	4.746E-09	4.176E-09
ESE	2.411E-10	1.435E-08	2.269E-08	1.951E-08	1.470E-08	1.136E-08	8.959E-09	7.233E-09	5.973E-09	5.033E-09	4.316E-09
SE	9.531E-10	6.233E-09	1.140E-08	1.362E-08	1.401E-08	1.217E-08	1.021E-08	8.584E-09	7.302E-09	6.298E-09	5.503E-09
SSE	5.305E-11	3.659E-09	1.687E-08	2.774E-08	3.370E-08	3.062E-08	2.616E-08	2.220E-08	1.898E-08	1.642E-08	1.438E-08

ANNUAL AVERAGE CHI/Q (SEC/METER CUBED) DISTANCE IN MILES FROM THE SITE

SECTOR	5.000	7.500	10.000	15.000	20.000	25.000	30.000	35.000	40.000	45.000	50.000
S	5.711E-08	4.112E-08	2.687E-08	1.549E-08	1.105E-08	8.430E-09	6.538E-09	5.271E-09	4.422E-09	3.774E-09	3.251E-09
SSW	3.970E-08	3.385E-08	2.212E-08	1.276E-08	9.237E-09	6.940E-09	5.383E-09	4.341E-09	3.603E-09	3.054E-09	2.633E-09
SW	3.073E-08	2.574E-08	1.707E-08	1.002E-08	7.276E-09	5.611E-09	4.514E-09	3.641E-09	3.021E-09	2.560E-09	2.206E-09
WSW	3.721E-08	2.831E-08	2.134E-08	1.382E-08	9.334E-09	6.879E-09	5.355E-09	4.328E-09	3.596E-09	3.052E-09	2.632E-09
W	2.643E-08	1.514E-08	1.171E-08	8.555E-09	6.852E-09	5.092E-09	3.955E-09	3.190E-09	2.645E-09	2.239E-09	1.927E-09
WNW	4.356E-08	2.577E-08	1.820E-08	1.164E-08	8.105E-09	6.106E-09	4.859E-09	3.973E-09	3.309E-09	2.808E-09	2.422E-09
NW	6.098E-08	3.643E-08	2.615E-08	1.688E-08	1.148E-08	8.520E-09	6.875E-09	5.627E-09	4.694E-09	3.998E-09	3.462E-09
NNW	1.022E-07	6.290E-08	4.151E-08	2.434E-08	1.669E-08	1.245E-08	9.937E-09	8.200E-09	7.023E-09	6.036E-09	5.236E-09
N	2.957E-08	1.948E-08	1.733E-08	1.562E-08	1.400E-08	1.185E-08	9.327E-09	7.585E-09	6.327E-09	5.390E-09	4.669E-09
NNE	3.017E-08	6.091E-08	3.991E-08	2.317E-08	1.579E-08	1.171E-08	9.163E-09	7.438E-09	6.202E-09	5.277E-09	4.563E-09
NE	1.178E-08	2.032E-08	1.319E-08	7.564E-09	5.106E-09	3.764E-09	2.963E-09	2.413E-09	2.019E-09	1.713E-09	1.479E-09
ENE	2.848E-09	5.569E-09	3.743E-09	2.238E-09	1.551E-09	1.166E-09	9.853E-10	8.397E-10	7.026E-10	6.002E-10	5.210E-10
E	4.473E-09	1.348E-08	9.289E-09	5.714E-09	4.021E-09	3.050E-09	2.426E-09	1.996E-09	1.806E-09	1.627E-09	1.411E-09
ESE	4.313E-09	7.506E-09	5.177E-09	3.197E-09	2.264E-09	1.726E-09	1.379E-09	1.139E-09	9.643E-10	8.313E-10	7.273E-10
SE	4.867E-09	3.085E-09	2.546E-09	2.318E-09	2.007E-09	1.847E-09	1.747E-09	1.667E-09	1.421E-09	1.232E-09	1.083E-09
SSE	1.592E-08	3.286E-08	2.157E-08	1.255E-08	8.561E-09	6.361E-09	4.988E-09	4.058E-09	3.393E-09	2.895E-09	2.510E-09

CHI/Q (SEC/METER CUBED) FOR EACH SEGMENT
SEGMENT BOUNDARIES IN MILES FROM THE SITE

DIRECTION FROM SITE	.5-1	1-2	2-3	3-4	4-5	5-10	10-20	20-30	30-40	40-50
S	7.052E-08	9.375E-08	7.180E-08	5.606E-08	5.947E-08	3.834E-08	1.605E-08	8.372E-09	5.309E-09	3.772E-09
SSW	3.330E-08	5.495E-08	5.090E-08	5.105E-08	4.296E-08	2.993E-08	1.327E-08	6.930E-09	4.357E-09	3.060E-09
SW	5.291E-08	1.146E-07	7.662E-08	4.732E-08	3.380E-08	2.300E-08	1.037E-08	5.616E-09	3.654E-09	2.565E-09
WSW	6.654E-08	1.472E-07	9.615E-08	5.862E-08	4.150E-08	2.719E-08	1.350E-08	6.924E-09	4.343E-09	3.058E-09
W	1.346E-07	1.399E-07	7.680E-08	4.548E-08	3.102E-08	1.612E-08	8.499E-09	5.106E-09	3.201E-09	2.244E-09
WNW	1.595E-07	2.206E-07	1.232E-07	7.550E-08	5.120E-08	2.636E-08	1.153E-08	6.140E-09	3.973E-09	2.814E-09
NW	2.037E-07	3.186E-07	1.800E-07	1.062E-07	7.150E-08	3.732E-08	1.654E-08	8.652E-09	5.628E-09	4.006E-09
NNW	1.322E-07	1.749E-07	1.779E-07	1.634E-07	1.189E-07	6.213E-08	2.475E-08	1.257E-08	8.248E-09	6.032E-09
N	1.989E-07	1.011E-07	6.250E-08	4.400E-08	3.325E-08	2.077E-08	1.528E-08	1.141E-08	7.604E-09	5.401E-09
NNE	1.443E-07	9.410E-08	5.647E-08	3.807E-08	3.002E-08	4.475E-08	2.361E-08	1.178E-08	7.460E-09	5.287E-09
NE	1.807E-08	2.331E-08	1.847E-08	1.357E-08	1.133E-08	1.525E-08	7.722E-09	3.801E-09	2.420E-09	1.717E-09
ENE	2.829E-09	5.641E-09	4.818E-09	3.527E-09	2.849E-09	4.153E-09	2.267E-09	1.196E-09	8.291E-10	6.012E-10
E	6.515E-09	8.194E-09	7.158E-09	5.423E-09	4.455E-09	9.617E-09	5.756E-09	3.059E-09	2.046E-09	1.600E-09
ESE	1.942E-08	1.428E-08	8.908E-09	5.975E-09	4.527E-09	5.761E-09	3.222E-09	1.731E-09	1.141E-09	8.322E-10
SE	1.124E-08	1.311E-08	1.008E-08	7.286E-09	5.503E-09	3.242E-09	2.230E-09	1.850E-09	1.596E-09	1.233E-09
SSE	1.876E-08	3.100E-08	2.577E-08	1.892E-08	1.556E-08	2.408E-08	1.278E-08	6.398E-09	4.070E-09	2.900E-09

ERP ELEVATED STACK RELEASES - JUL-SEP 2012
8.000 DAY DECAY, DEPLETED
CORRECTED USING STANDARD OPEN TERRAIN FACTORS

ANNUAL AVERAGE CHI/Q (SEC/METER CUBED) DISTANCE IN MILES FROM THE SITE

SECTOR	.250	.500	.750	1.000	1.500	2.000	2.500	3.000	3.500	4.000	4.500
S	3.767E-10	2.536E-08	6.868E-08	9.307E-08	1.003E-07	8.627E-08	7.097E-08	5.840E-08	4.867E-08	5.568E-08	6.140E-08
SSW	8.949E-11	7.725E-09	2.988E-08	4.828E-08	5.919E-08	5.376E-08	4.565E-08	5.070E-08	5.279E-08	4.624E-08	4.114E-08
SW	6.334E-11	7.498E-09	3.952E-08	8.517E-08	1.474E-07	1.022E-07	7.492E-08	5.760E-08	4.599E-08	3.782E-08	3.185E-08
WSW	1.311E-10	1.192E-08	5.042E-08	1.051E-07	1.942E-07	1.298E-07	9.380E-08	7.167E-08	5.709E-08	4.692E-08	3.953E-08
W	7.235E-09	6.130E-08	1.378E-07	1.651E-07	1.627E-07	1.051E-07	7.424E-08	5.588E-08	4.403E-08	3.590E-08	3.006E-08
WNW	8.249E-10	4.661E-08	1.451E-07	2.235E-07	2.766E-07	1.699E-07	1.163E-07	9.084E-08	7.442E-08	5.951E-08	4.896E-08
NW	2.077E-08	7.801E-08	1.747E-07	2.833E-07	4.173E-07	2.512E-07	1.705E-07	1.295E-07	1.034E-07	8.271E-08	6.809E-08
NNW	5.184E-08	9.381E-08	1.308E-07	1.481E-07	1.814E-07	1.780E-07	1.754E-07	1.737E-07	1.752E-07	1.399E-07	1.150E-07
N	1.660E-07	2.576E-07	2.164E-07	1.476E-07	9.645E-08	7.502E-08	6.123E-08	5.041E-08	4.252E-08	3.658E-08	3.198E-08
NNE	2.245E-08	1.262E-07	1.640E-07	1.321E-07	9.300E-08	6.996E-08	5.468E-08	4.409E-08	3.648E-08	3.085E-08	2.658E-08
NE	1.016E-10	7.305E-09	1.798E-08	2.309E-08	2.465E-08	2.167E-08	1.829E-08	1.545E-08	1.319E-08	1.142E-08	1.002E-08
ENE	5.690E-17	1.151E-10	2.234E-09	4.641E-09	6.161E-09	5.642E-09	4.794E-09	4.035E-09	3.424E-09	2.941E-09	2.561E-09
E	1.868E-09	5.729E-09	5.993E-09	7.156E-09	8.653E-09	8.171E-09	7.152E-09	6.152E-09	5.301E-09	4.604E-09	4.039E-09
ESE	2.412E-10	1.422E-08	2.222E-08	1.903E-08	1.431E-08	1.102E-08	8.648E-09	6.947E-09	5.710E-09	4.789E-09	4.091E-09
SE	9.532E-10	6.181E-09	1.125E-08	1.348E-08	1.383E-08	1.195E-08	9.969E-09	8.340E-09	7.066E-09	6.072E-09	5.290E-09
SSE	5.306E-11	3.634E-09	1.679E-08	2.766E-08	3.341E-08	3.015E-08	2.561E-08	2.162E-08	1.840E-08	1.585E-08	1.384E-08

ANNUAL AVERAGE CHI/Q (SEC/METER CUBED) DISTANCE IN MILES FROM THE SITE

SECTOR	5.000	7.500	10.000	15.000	20.000	25.000	30.000	35.000	40.000	45.000	50.000
S	5.504E-08	3.920E-08	2.491E-08	1.357E-08	9.078E-09	6.576E-09	4.925E-09	3.851E-09	3.149E-09	2.632E-09	2.225E-09
SSW	3.846E-08	3.255E-08	2.067E-08	1.124E-08	7.659E-09	5.577E-09	4.212E-09	3.319E-09	2.698E-09	2.244E-09	1.902E-09
SW	2.991E-08	2.496E-08	1.609E-08	8.890E-09	6.020E-09	4.388E-09	3.432E-09	2.705E-09	2.198E-09	1.828E-09	1.549E-09
WSW	3.637E-08	2.736E-08	2.010E-08	1.245E-08	8.127E-09	5.828E-09	4.434E-09	3.514E-09	2.870E-09	2.398E-09	2.041E-09
W	2.569E-08	1.471E-08	1.137E-08	7.949E-09	6.058E-09	4.393E-09	3.342E-09	2.649E-09	2.164E-09	1.808E-09	1.539E-09
WNW	4.193E-08	2.422E-08	1.665E-08	1.004E-08	6.508E-09	4.645E-09	3.587E-09	2.863E-09	2.334E-09	1.942E-09	1.646E-09
NW	5.850E-08	3.413E-08	2.385E-08	1.455E-08	9.408E-09	6.693E-09	5.243E-09	4.188E-09	3.419E-09	2.855E-09	2.429E-09
NNW	1.000E-07	5.997E-08	3.835E-08	2.102E-08	1.331E-08	9.297E-09	7.025E-09	5.573E-09	4.646E-09	3.901E-09	3.312E-09
N	2.846E-08	1.869E-08	1.672E-08	1.526E-08	1.347E-08	1.092E-08	8.398E-09	6.691E-09	5.480E-09	4.593E-09	3.919E-09
NNE	2.890E-08	5.988E-08	3.812E-08	2.101E-08	1.358E-08	9.657E-09	7.291E-09	5.738E-09	4.655E-09	3.866E-09	3.270E-09
NE	1.140E-08	1.990E-08	1.254E-08	6.810E-09	4.356E-09	3.074E-09	2.343E-09	1.864E-09	1.528E-09	1.274E-09	1.082E-09
ENE	2.736E-09	5.454E-09	3.559E-09	2.000E-09	1.287E-09	9.102E-10	7.298E-10	5.986E-10	4.894E-10	4.092E-10	3.484E-10
E	4.333E-09	1.341E-08	8.989E-09	5.207E-09	3.406E-09	2.434E-09	1.841E-09	1.449E-09	1.260E-09	1.098E-09	9.269E-10
ESE	4.090E-09	7.337E-09	4.929E-09	2.873E-09	1.897E-09	1.364E-09	1.037E-09	8.192E-10	6.660E-10	5.535E-10	4.681E-10
SE	4.666E-09	2.933E-09	2.426E-09	2.250E-09	1.975E-09	1.844E-09	1.768E-09	1.707E-09	1.445E-09	1.247E-09	1.091E-09
SSE	1.536E-08	3.221E-08	2.051E-08	1.131E-08	7.303E-09	5.191E-09	3.920E-09	3.087E-09	2.506E-09	2.083E-09	1.763E-09

CHI/Q (SEC/METER CUBED) FOR EACH SEGMENT
SEGMENT BOUNDARIES IN MILES FROM THE SITE

DIRECTION FROM SITE	.5-1	1-2	2-3	3-4	4-5	5-10	10-20	20-30	30-40	40-50
S	6.990E-08	9.246E-08	7.002E-08	5.412E-08	5.735E-08	3.637E-08	1.409E-08	6.583E-09	3.890E-09	2.634E-09
SSW	3.314E-08	5.435E-08	4.983E-08	4.969E-08	4.166E-08	2.858E-08	1.174E-08	5.586E-09	3.337E-09	2.252E-09
SW	5.269E-08	1.135E-07	7.527E-08	4.620E-08	3.290E-08	2.211E-08	9.213E-09	4.441E-09	2.719E-09	1.834E-09
WSW	6.616E-08	1.458E-07	9.456E-08	5.738E-08	4.055E-08	2.613E-08	1.223E-08	5.883E-09	3.531E-09	2.405E-09
W	1.329E-07	1.376E-07	7.512E-08	4.432E-08	3.017E-08	1.567E-08	7.868E-09	4.417E-09	2.662E-09	1.814E-09
WNW	1.581E-07	2.174E-07	1.204E-07	7.343E-08	4.948E-08	2.479E-08	9.940E-09	4.719E-09	2.868E-09	1.948E-09
NW	2.015E-07	3.137E-07	1.756E-07	1.030E-07	6.887E-08	3.498E-08	1.433E-08	6.837E-09	4.196E-09	2.864E-09
NNW	1.303E-07	1.725E-07	1.754E-07	1.613E-07	1.168E-07	5.927E-08	2.145E-08	9.458E-09	5.634E-09	3.903E-09
N	1.949E-07	9.828E-08	6.058E-08	4.251E-08	3.204E-08	1.998E-08	1.479E-08	1.059E-08	6.718E-09	4.606E-09
NNE	1.414E-07	9.144E-08	5.452E-08	3.651E-08	2.870E-08	4.333E-08	2.151E-08	9.758E-09	5.769E-09	3.879E-09
NE	1.788E-08	2.298E-08	1.805E-08	1.316E-08	1.095E-08	1.474E-08	6.992E-09	3.123E-09	1.873E-09	1.278E-09
ENE	2.833E-09	5.593E-09	4.717E-09	3.415E-09	2.739E-09	4.008E-09	2.030E-09	9.387E-10	5.945E-10	4.105E-10
E	6.451E-09	8.106E-09	7.024E-09	5.279E-09	4.315E-09	9.430E-09	5.247E-09	2.456E-09	1.489E-09	1.083E-09
ESE	1.903E-08	1.389E-08	8.599E-09	5.713E-09	4.297E-09	5.545E-09	2.896E-09	1.375E-09	8.231E-10	5.552E-10
SE	1.112E-08	1.292E-08	9.845E-09	7.052E-09	5.291E-09	3.093E-09	2.167E-09	1.849E-09	1.625E-09	1.248E-09
SSE	1.870E-08	3.068E-08	2.522E-08	1.835E-08	1.500E-08	2.327E-08	1.157E-08	5.246E-09	3.104E-09	2.090E-09

ERP ELEVATED STACK RELEASES - JUL-SEP 2012
CORRECTED USING STANDARD OPEN TERRAIN FACTORS

********** RELATIVE DEPOSITION PER UNIT AREA (M**-2) AT FIXED POINTS BY DOWNWIND SECTORS **********

DIRECTION FROM SITE	DISTANCES IN MILES .25	.50	.75	1.00	1.50	2.00	2.50	3.00	3.50	4.00	4.50
S	3.233E-09	3.291E-09	3.774E-09	3.168E-09	1.777E-09	1.151E-09	7.996E-10	5.825E-10	4.394E-10	3.452E-10	3.256E-10
SSW	8.591E-10	1.127E-09	1.592E-09	1.464E-09	8.638E-10	5.690E-10	3.986E-10	2.916E-10	2.752E-10	2.081E-10	1.629E-10
SW	5.579E-10	6.624E-10	8.717E-10	7.793E-10	8.416E-10	4.591E-10	2.849E-10	1.937E-10	1.401E-10	1.060E-10	8.295E-11
WSW	1.054E-09	9.554E-10	9.569E-10	8.871E-10	7.132E-10	3.850E-10	2.375E-10	1.608E-10	1.160E-10	8.769E-11	6.863E-11
W	1.044E-09	2.332E-09	1.820E-09	1.189E-09	5.332E-10	2.871E-10	1.770E-10	1.198E-10	8.642E-11	6.531E-11	5.111E-11
WNW	2.340E-09	1.959E-09	2.673E-09	2.355E-09	1.222E-09	6.358E-10	3.874E-10	2.679E-10	2.151E-10	1.714E-10	1.446E-10
NW	7.718E-09	6.030E-09	4.758E-09	5.130E-09	2.898E-09	1.446E-09	8.599E-10	5.761E-10	4.217E-10	3.311E-10	2.746E-10
NNW	7.706E-09	5.959E-09	4.608E-09	2.919E-09	2.042E-09	1.090E-09	6.722E-10	5.625E-10	4.324E-10	3.596E-10	3.169E-10
N	2.245E-08	1.654E-08	1.151E-08	6.487E-09	2.572E-09	1.426E-09	9.103E-10	6.333E-10	4.664E-10	3.578E-10	2.832E-10
NNE	1.229E-08	9.280E-09	6.830E-09	4.109E-09	1.759E-09	1.017E-09	6.653E-10	4.694E-10	3.483E-10	2.681E-10	2.122E-10
NE	8.002E-10	7.735E-10	8.390E-10	6.836E-10	3.766E-10	2.423E-10	1.678E-10	1.221E-10	9.202E-11	7.128E-11	5.644E-11
ENE	9.170E-12	5.501E-11	1.171E-10	1.213E-10	7.579E-11	5.082E-11	3.589E-11	2.637E-11	1.997E-11	1.550E-11	1.227E-11
E	2.632E-10	2.369E-10	2.350E-10	1.817E-10	9.665E-11	6.141E-11	4.228E-11	3.065E-11	2.307E-11	1.786E-11	1.414E-11
ESE	2.046E-09	1.534E-09	1.110E-09	6.559E-10	2.752E-10	1.574E-10	1.023E-10	7.195E-11	5.329E-11	4.099E-11	3.244E-11
SE	1.045E-09	9.004E-10	8.397E-10	6.226E-10	3.216E-10	2.021E-10	1.383E-10	1.000E-10	7.515E-11	5.814E-11	4.603E-11
SSE	5.880E-10	8.431E-10	1.257E-09	1.178E-09	7.021E-10	4.640E-10	3.256E-10	2.383E-10	1.802E-10	1.398E-10	1.107E-10

DIRECTION FROM SITE	DISTANCES IN MILES 5.00	7.50	10.00	15.00	20.00	25.00	30.00	35.00	40.00	45.00	50.00
S	2.618E-10	1.958E-10	1.357E-10	7.960E-11	5.049E-11	3.483E-11	2.491E-11	1.866E-11	1.482E-11	1.182E-11	9.651E-12
SSW	1.319E-10	1.310E-10	9.602E-11	5.889E-11	3.346E-11	2.354E-11	1.687E-11	1.267E-11	9.922E-12	7.926E-12	6.469E-12
SW	6.732E-11	7.982E-11	6.015E-11	3.766E-11	2.419E-11	1.466E-11	1.025E-11	7.693E-12	5.982E-12	4.778E-12	3.900E-12
WSW	5.595E-11	6.774E-11	5.136E-11	3.006E-11	1.819E-11	1.220E-11	8.857E-12	6.651E-12	5.171E-12	4.131E-12	3.372E-12
W	4.112E-11	1.851E-11	3.572E-11	2.440E-11	1.352E-11	9.224E-12	6.609E-12	4.963E-12	3.859E-12	3.082E-12	2.516E-12
WNW	1.279E-10	8.295E-11	6.120E-11	3.783E-11	2.348E-11	1.508E-11	1.061E-11	7.966E-12	6.242E-12	4.986E-12	4.070E-12
NW	2.386E-10	1.467E-10	1.058E-10	6.371E-11	3.888E-11	2.605E-11	1.901E-11	1.428E-11	1.113E-11	8.887E-12	7.254E-12
NNW	2.914E-10	2.099E-10	1.616E-10	1.031E-10	6.687E-11	4.458E-11	2.855E-11	1.976E-11	1.542E-11	1.232E-11	1.005E-11
N	2.296E-10	1.107E-10	6.883E-11	3.797E-11	1.007E-10	5.616E-11	4.024E-11	3.022E-11	2.350E-11	1.877E-11	1.532E-11
NNE	1.717E-10	2.533E-10	1.570E-10	8.157E-11	4.978E-11	3.331E-11	2.379E-11	1.779E-11	1.379E-11	1.099E-11	8.947E-12
NE	4.551E-11	7.916E-11	5.047E-11	2.705E-11	1.665E-11	1.112E-11	7.708E-12	5.726E-12	4.452E-12	3.556E-12	2.903E-12
ENE	9.886E-12	1.670E-11	1.283E-11	8.136E-12	5.232E-12	3.455E-12	2.414E-12	1.469E-12	1.144E-12	9.161E-13	7.495E-13
E	1.140E-11	2.552E-11	2.022E-11	1.312E-11	8.494E-12	5.617E-12	3.925E-12	2.859E-12	2.165E-12	1.473E-12	1.191E-12
ESE	2.627E-11	2.749E-11	2.002E-11	1.232E-11	8.011E-12	5.420E-12	3.887E-12	2.910E-12	2.252E-12	1.800E-12	1.469E-12
SE	3.714E-11	1.768E-11	1.083E-11	5.781E-12	3.601E-12	2.547E-12	1.974E-12	4.278E-12	3.324E-12	2.668E-12	2.200E-12
SSE	8.919E-11	1.473E-10	9.235E-11	4.857E-11	2.975E-11	1.989E-11	1.418E-11	1.058E-11	8.189E-12	6.515E-12	5.299E-12

********** RELATIVE DEPOSITION PER UNIT AREA (M**-2) BY DOWNWIND SECTORS **********

DIRECTION FROM SITE	SEGMENT BOUNDARIES IN MILES .5-1	1-2	2-3	3-4	4-5	5-10	10-20	20-30	30-40	40-50
S	3.397E-09	1.808E-09	8.064E-10	4.444E-10	3.078E-10	1.838E-10	7.913E-11	3.504E-11	1.898E-11	1.191E-11
SSW	1.432E-09	8.661E-10	4.012E-10	2.543E-10	1.648E-10	1.156E-10	5.584E-11	2.351E-11	1.282E-11	7.978E-12
SW	7.841E-10	6.578E-10	2.949E-10	1.424E-10	8.398E-11	6.830E-11	3.667E-11	1.543E-11	7.770E-12	4.809E-12
WSW	9.255E-10	6.060E-10	2.461E-10	1.180E-10	6.958E-11	5.784E-11	2.952E-11	1.246E-11	6.717E-12	4.158E-12
W	1.654E-09	5.697E-10	1.835E-10	8.791E-11	5.162E-11	3.118E-11	2.208E-11	9.324E-12	5.013E-12	3.103E-12
WNW	2.373E-09	1.213E-09	4.058E-10	2.135E-10	1.463E-10	8.327E-11	3.665E-11	1.553E-11	8.064E-12	5.019E-12
NW	5.206E-09	2.748E-09	9.026E-10	4.313E-10	2.780E-10	1.490E-10	6.203E-11	2.666E-11	1.443E-11	8.945E-12
NNW	4.158E-09	1.814E-09	7.398E-10	4.419E-10	3.201E-10	2.065E-10	9.998E-11	4.411E-11	2.062E-11	1.240E-11
N	1.040E-08	2.933E-09	9.371E-10	4.727E-10	2.855E-10	1.185E-10	7.271E-11	6.167E-11	3.052E-11	1.889E-11
NNE	6.165E-09	1.951E-09	6.807E-10	3.523E-10	2.138E-10	1.924E-10	8.421E-11	3.389E-11	1.798E-11	1.106E-11
NE	7.554E-10	3.851E-10	1.694E-10	9.271E-11	5.679E-11	5.893E-11	2.763E-11	1.123E-11	5.807E-12	3.579E-12
ENE	1.052E-10	7.481E-11	3.606E-11	2.009E-11	1.235E-11	1.346E-11	7.888E-12	3.513E-12	1.615E-12	9.220E-13
E	2.117E-10	9.988E-11	4.273E-11	2.325E-11	1.423E-11	2.003E-11	1.264E-11	5.707E-12	2.899E-12	1.574E-12
ESE	1.002E-09	3.074E-10	1.049E-10	5.394E-11	3.269E-11	2.390E-11	1.212E-11	5.498E-12	2.939E-12	1.811E-12
SE	7.567E-10	3.354E-10	1.400E-10	7.577E-11	4.633E-11	1.896E-11	5.935E-12	2.599E-12	3.256E-12	2.689E-12
SSE	1.130E-09	7.021E-10	3.276E-10	1.814E-10	1.113E-10	1.100E-10	4.993E-11	2.023E-11	1.070E-11	6.560E-12

ERP ELEVATED STACK RELEASES - JUL-SEP 2012
CORRECTED USING STANDARD OPEN TERRAIN FACTORS
SPECIFIC POINTS OF INTEREST

RELEASE ID	TYPE OF LOCATION	DIRECTION FROM SITE	DIST. (MI)	X/Q (SEC/M3) NO DECAY UNDEPLETED	X/Q (SEC/M3) 2.26 DAY DECAY UNDEPLETED	X/Q (SEC/M3) 8.0 DAY DECAY DEPLETED	D/Q (PER SQ.METER)
A	Site Boundary	S	.80	7.6E-08	7.6E-08	7.5E-08	3.7E-09
A	Site Boundary	SSW	.82	3.7E-08	3.6E-08	3.6E-08	1.6E-09
A	Site Boundary	SW	.97	8.1E-08	8.1E-08	8.1E-08	8.0E-10
A	Site Boundary	WSW	.93	8.9E-08	8.9E-08	8.8E-08	9.0E-10
A	Site Boundary	W	.91	1.6E-07	1.6E-07	1.6E-07	1.3E-09
A	Site Boundary	WNW	.94	2.1E-07	2.1E-07	2.1E-07	2.7E-09
A	Site Boundary	NW	.81	2.0E-07	2.0E-07	2.0E-07	4.3E-09
A	Site Boundary	NNW	.69	1.2E-07	1.2E-07	1.2E-07	4.9E-09
A	Site Boundary	N	.67	2.3E-07	2.3E-07	2.3E-07	1.3E-08
A	Site Boundary	NNE	.60	1.5E-07	1.5E-07	1.5E-07	8.1E-09
A	Site Boundary	NE	.62	1.2E-08	1.2E-08	1.2E-08	7.9E-10
A	Site Boundary	ENE	.59	5.1E-10	5.1E-10	5.1E-10	7.6E-11
A	Site Boundary	E	.53	5.7E-09	5.7E-09	5.6E-09	2.4E-10
A	Site Boundary	ESE	.54	1.6E-08	1.6E-08	1.6E-08	1.5E-09
A	Site Boundary	SE	.65	9.1E-09	9.1E-09	9.0E-09	8.5E-10
A	Site Boundary	SSE	.81	2.0E-08	2.0E-08	2.0E-08	1.3E-09
A	Nearest Res	SSW	3.00	5.2E-08	5.2E-08	5.1E-08	2.9E-10
A	Nearest Res	SW	1.30	1.3E-07	1.3E-07	1.3E-07	1.1E-09
A	Nearest Res	WSW	1.90	1.4E-07	1.4E-07	1.4E-07	4.3E-10
A	Nearest Res	W	2.90	6.1E-08	6.0E-08	5.9E-08	1.3E-10
A	Nearest Res	WNW	1.70	2.3E-07	2.3E-07	2.2E-07	9.2E-10
A	Nearest Res	NW	.90	2.4E-07	2.4E-07	2.4E-07	5.4E-09
A	Nearest Res	NNW	1.90	1.8E-07	1.8E-07	1.8E-07	1.2E-09
A	Nearest Res	N	3.00	5.2E-08	5.2E-08	5.0E-08	6.3E-10
A	Nearest Res	NNE	1.90	7.6E-08	7.6E-08	7.4E-08	1.1E-09
A	Nearest Res	NE	3.00	1.6E-08	1.6E-08	1.5E-08	1.2E-10
A	Nearest Res	ENE	1.70	6.1E-09	6.1E-09	6.1E-09	6.4E-11
A	Nearest Res	E	2.20	8.0E-09	7.9E-09	7.8E-09	5.2E-11
A	Nearest Res	ESE	2.30	9.9E-09	9.8E-09	9.5E-09	1.2E-10
A	Nearest Res	SE	3.00	8.6E-09	8.6E-09	8.3E-09	1.0E-10
A	Nearest Cow	NNW	3.50	1.8E-07	1.8E-07	1.8E-07	4.3E-10
A	Nearest Garde	SSW	3.00	5.2E-08	5.2E-08	5.1E-08	2.9E-10
A	Nearest Garde	SW	1.30	1.3E-07	1.3E-07	1.3E-07	1.1E-09
A	Nearest Garde	WSW	1.90	1.4E-07	1.4E-07	1.4E-07	4.3E-10
A	Nearest Garde	W	2.90	6.1E-08	6.0E-08	5.9E-08	1.3E-10
A	Nearest Garde	WNW	2.40	1.3E-07	1.3E-07	1.2E-07	4.2E-10
A	Nearest Garde	NW	2.90	1.4E-07	1.4E-07	1.4E-07	6.2E-10
A	Nearest Garde	NNW	2.80	1.8E-07	1.8E-07	1.7E-07	6.2E-10
A	Nearest Garde	ENE	1.70	6.1E-09	6.1E-09	6.1E-09	6.4E-11
A	Nearest Garde	E	2.20	8.0E-09	7.9E-09	7.8E-09	5.2E-11
A	Nearest Garde	ESE	2.30	9.9E-09	9.8E-09	9.5E-09	1.2E-10
A	MAXIMUM CHI/Q	S	1.50	1.0E-07	1.0E-07	1.0E-07	1.8E-09
A	MAXIMUM CHI/Q	SSW	1.50	6.0E-08	6.0E-08	5.9E-08	8.6E-10
A	MAXIMUM CHI/Q	SW	1.50	1.5E-07	1.5E-07	1.5E-07	8.4E-10
A	MAXIMUM CHI/Q	WSW	1.50	2.0E-07	2.0E-07	1.9E-07	7.1E-10
A	MAXIMUM CHI/Q	W	1.00	1.7E-07	1.7E-07	1.7E-07	1.2E-09
A	MAXIMUM CHI/Q	WNW	1.50	2.8E-07	2.8E-07	2.8E-07	1.2E-09
A	MAXIMUM CHI/Q	NW	1.50	4.2E-07	4.2E-07	4.2E-07	2.9E-09
A	MAXIMUM CHI/Q	NNW	1.50	1.8E-07	1.8E-07	1.8E-07	2.0E-09
A	MAXIMUM CHI/Q	N	.50	2.5E-07	2.5E-07	2.5E-07	1.7E-08
A	MAXIMUM CHI/Q	NNE	.75	1.7E-07	1.7E-07	1.6E-07	6.8E-09
A	MAXIMUM CHI/Q	NE	1.50	2.5E-08	2.5E-08	2.5E-08	3.8E-10
A	MAXIMUM CHI/Q	ENE	1.50	6.2E-09	6.2E-09	6.2E-09	7.6E-11
A	MAXIMUM CHI/Q	E	7.50	1.4E-08	1.3E-08	1.3E-08	2.6E-11
A	MAXIMUM CHI/Q	ESE	.75	2.3E-08	2.3E-08	2.2E-08	1.1E-09
A	MAXIMUM CHI/Q	SE	1.50	1.4E-08	1.4E-08	1.4E-08	3.2E-10
A	MAXIMUM CHI/Q	SSE	1.50	3.4E-08	3.4E-08	3.3E-08	7.0E-10

Atmospheric Diffusion Estimates

Elevated Releases

October-December 2012

ERP ELEVATED STACK RELEASES - OCT-DEC 2012
NO DECAY, UNDEPLETED
CORRECTED USING STANDARD OPEN TERRAIN FACTORS

ANNUAL AVERAGE CHI/Q (SEC/METER CUBED) DISTANCE IN MILES FROM THE SITE

SECTOR	.250	.500	.750	1.000	1.500	2.000	2.500	3.000	3.500	4.000	4.500
S	1.243E-10	7.776E-09	2.921E-08	4.439E-08	4.959E-08	4.261E-08	3.494E-08	2.870E-08	2.390E-08	2.691E-08	2.981E-08
SSW	1.283E-15	9.122E-10	1.364E-08	2.593E-08	3.320E-08	3.058E-08	2.629E-08	2.988E-08	3.143E-08	2.760E-08	2.453E-08
SW	2.350E-16	2.278E-10	9.149E-09	2.536E-08	4.540E-08	3.193E-08	2.385E-08	1.872E-08	1.528E-08	1.284E-08	1.105E-08
WSW	3.639E-16	3.385E-10	1.591E-08	4.479E-08	7.733E-08	5.038E-08	3.596E-08	2.735E-08	2.176E-08	1.791E-08	1.512E-08
W	7.052E-10	3.132E-08	9.554E-08	1.146E-07	1.046E-07	6.616E-08	4.595E-08	3.407E-08	2.650E-08	2.135E-08	1.768E-08
WNW	7.744E-11	7.574E-09	8.508E-08	1.665E-07	2.221E-07	1.386E-07	9.581E-08	7.526E-08	6.174E-08	4.957E-08	4.097E-08
NW	7.365E-16	8.513E-10	5.304E-08	1.687E-07	3.503E-07	2.134E-07	1.448E-07	1.083E-07	8.486E-08	6.745E-08	5.525E-08
NNW	2.222E-10	1.370E-08	5.536E-08	9.987E-08	1.508E-07	1.536E-07	1.496E-07	1.401E-07	1.305E-07	1.034E-07	8.456E-08
N	4.484E-09	2.738E-08	4.745E-08	5.558E-08	5.902E-08	5.488E-08	4.849E-08	4.153E-08	3.587E-08	3.134E-08	2.768E-08
NNE	2.876E-09	1.680E-08	3.025E-08	3.832E-08	4.340E-08	3.965E-08	3.422E-08	2.926E-08	2.516E-08	2.186E-08	1.921E-08
NE	3.815E-16	4.316E-10	7.745E-09	1.617E-08	2.264E-08	2.170E-08	1.905E-08	1.641E-08	1.417E-08	1.233E-08	1.084E-08
ENE	2.894E-11	2.241E-09	1.353E-08	2.462E-08	3.149E-08	2.872E-08	2.438E-08	2.049E-08	1.735E-08	1.487E-08	1.291E-08
E	3.390E-11	2.826E-09	1.234E-08	2.010E-08	2.381E-08	2.103E-08	1.755E-08	1.460E-08	1.228E-08	1.048E-08	9.081E-09
ESE	1.319E-15	8.430E-10	1.221E-08	2.288E-08	2.871E-08	2.611E-08	2.225E-08	1.880E-08	1.600E-08	1.378E-08	1.201E-08
SE	2.112E-11	3.287E-09	3.478E-08	6.302E-08	7.532E-08	6.567E-08	5.412E-08	4.455E-08	3.713E-08	3.142E-08	2.699E-08
SSE	5.787E-11	5.450E-09	4.035E-08	7.263E-08	8.975E-08	8.045E-08	6.765E-08	5.653E-08	4.768E-08	4.074E-08	3.529E-08

ANNUAL AVERAGE CHI/Q (SEC/METER CUBED) DISTANCE IN MILES FROM THE SITE

SECTOR	5.000	7.500	10.000	15.000	20.000	25.000	30.000	35.000	40.000	45.000	50.000
S	2.696E-08	2.036E-08	1.343E-08	7.862E-09	5.719E-09	4.431E-09	3.475E-09	2.832E-09	2.404E-09	2.075E-09	1.806E-09
SSW	2.274E-08	1.781E-08	1.162E-08	6.703E-09	4.804E-09	3.615E-09	2.823E-09	2.292E-09	1.916E-09	1.636E-09	1.421E-09
SW	1.110E-08	1.465E-08	1.023E-08	6.430E-09	5.183E-09	4.295E-09	3.675E-09	3.030E-09	2.564E-09	2.215E-09	1.943E-09
WSW	1.401E-08	1.163E-08	9.285E-09	6.442E-09	4.434E-09	3.325E-09	2.633E-09	2.160E-09	1.822E-09	1.568E-09	1.372E-09
W	1.497E-08	8.246E-09	5.964E-09	3.944E-09	2.944E-09	2.184E-09	1.706E-09	1.385E-09	1.158E-09	9.889E-10	8.593E-10
WNW	3.521E-08	2.074E-08	1.460E-08	9.300E-09	6.504E-09	4.928E-09	3.946E-09	3.251E-09	2.733E-09	2.342E-09	2.041E-09
NW	4.688E-08	2.608E-08	1.770E-08	1.061E-08	7.155E-09	5.281E-09	4.173E-09	3.398E-09	2.838E-09	2.422E-09	2.102E-09
NNW	7.256E-08	4.187E-08	2.737E-08	1.588E-08	1.083E-08	8.065E-09	6.404E-09	5.269E-09	4.486E-09	3.857E-09	3.360E-09
N	2.477E-08	1.638E-08	1.444E-08	1.304E-08	1.205E-08	1.043E-08	8.277E-09	6.779E-09	5.694E-09	4.884E-09	4.260E-09
NNE	2.128E-08	3.623E-08	2.369E-08	1.377E-08	9.406E-09	7.016E-09	5.529E-09	4.525E-09	3.807E-09	3.270E-09	2.856E-09
NE	1.192E-08	2.230E-08	1.465E-08	8.565E-09	5.875E-09	4.395E-09	3.525E-09	2.919E-09	2.480E-09	2.131E-09	1.862E-09
ENE	1.328E-08	1.694E-08	1.114E-08	6.490E-09	4.432E-09	3.301E-09	2.711E-09	2.273E-09	1.903E-09	1.628E-09	1.417E-09
E	9.406E-09	1.353E-08	8.960E-09	5.274E-09	3.629E-09	2.719E-09	2.149E-09	1.763E-09	1.543E-09	1.361E-09	1.188E-09
ESE	1.232E-08	1.681E-08	1.140E-08	6.905E-09	4.835E-09	3.668E-09	2.927E-09	2.420E-09	2.052E-09	1.775E-09	1.559E-09
SE	2.349E-08	1.399E-08	1.054E-08	7.500E-09	5.533E-09	4.415E-09	3.700E-09	3.198E-09	2.687E-09	2.305E-09	2.010E-09
SSE	3.714E-08	4.832E-08	3.130E-08	1.794E-08	1.214E-08	8.983E-09	7.036E-09	5.729E-09	4.798E-09	4.106E-09	3.573E-09

CHI/Q (SEC/METER CUBED) FOR EACH SEGMENT

SEGMENT BOUNDARIES IN MILES FROM THE SITE

DIRECTION FROM SITE	.5-1	1-2	2-3	3-4	4-5	5-10	10-20	20-30	30-40	40-50
S	3.119E-08	4.533E-08	3.449E-08	2.642E-08	2.790E-08	1.875E-08	8.147E-09	4.392E-09	2.852E-09	2.072E-09
SSW	1.628E-08	3.042E-08	2.887E-08	2.953E-08	2.477E-08	1.615E-08	6.951E-09	3.615E-09	2.300E-09	1.640E-09
SW	1.437E-08	3.496E-08	2.395E-08	1.533E-08	1.160E-08	1.190E-08	6.721E-09	4.284E-09	3.037E-09	2.218E-09
WSW	2.529E-08	5.812E-08	3.636E-08	2.189E-08	1.554E-08	1.112E-08	6.181E-09	3.344E-09	2.166E-09	1.571E-09
W	8.974E-08	8.973E-08	4.659E-08	2.670E-08	1.776E-08	8.725E-09	3.949E-09	2.195E-09	1.390E-09	9.909E-10
WNW	1.040E-07	1.726E-07	9.900E-08	6.097E-08	4.138E-08	2.122E-08	9.235E-09	4.956E-09	3.253E-09	2.347E-09
NW	9.283E-08	2.491E-07	1.485E-07	8.494E-08	5.577E-08	2.698E-08	1.065E-08	5.338E-09	3.406E-09	2.427E-09
NNW	6.588E-08	1.407E-07	1.469E-07	1.229E-07	8.570E-08	4.224E-08	1.619E-08	8.138E-09	5.295E-09	3.859E-09
N	4.661E-08	5.642E-08	4.741E-08	3.576E-08	2.769E-08	1.738E-08	1.291E-08	1.000E-08	6.794E-09	4.893E-09
NNE	3.085E-08	4.061E-08	3.368E-08	2.508E-08	2.076E-08	2.733E-08	1.403E-08	7.059E-09	4.539E-09	3.276E-09
NE	9.866E-09	2.079E-08	1.870E-08	1.411E-08	1.168E-08	1.659E-08	8.722E-09	4.442E-09	2.925E-09	2.135E-09
ENE	1.595E-08	2.873E-08	2.398E-08	1.730E-08	1.363E-08	1.355E-08	6.609E-09	3.367E-09	2.257E-09	1.631E-09
E	1.367E-08	2.175E-08	1.730E-08	1.226E-08	9.617E-09	1.058E-08	5.362E-09	2.733E-09	1.789E-09	1.351E-09
ESE	1.443E-08	2.626E-08	2.190E-08	1.596E-08	1.265E-08	1.341E-08	6.983E-09	3.683E-09	2.425E-09	1.777E-09
SE	4.033E-08	6.830E-08	5.337E-08	3.708E-08	2.701E-08	1.457E-08	7.301E-09	4.427E-09	3.147E-09	2.309E-09
SSE	4.694E-08	8.181E-08	6.662E-08	4.757E-08	3.759E-08	3.827E-08	1.833E-08	9.045E-09	5.748E-09	4.114E-09

ERP ELEVATED STACK RELEASES - OCT-DEC 2012
2.260 DAY DECAY, UNDEPLETED
CORRECTED USING STANDARD OPEN TERRAIN FACTORS

ANNUAL AVERAGE CHI/Q (SEC/METER CUBED) DISTANCE IN MILES FROM THE SITE

SECTOR	.250	.500	.750	1.000	1.500	2.000	2.500	3.000	3.500	4.000	4.500
S	1.243E-10	7.773E-09	2.918E-08	4.434E-08	4.950E-08	4.251E-08	3.483E-08	2.859E-08	2.379E-08	2.678E-08	2.962E-08
SSW	1.283E-15	9.118E-10	1.363E-08	2.590E-08	3.315E-08	3.052E-08	2.622E-08	2.978E-08	3.131E-08	2.747E-08	2.440E-08
SW	2.350E-16	2.277E-10	9.137E-09	2.531E-08	4.525E-08	3.179E-08	2.371E-08	1.859E-08	1.515E-08	1.271E-08	1.092E-08
WSW	3.638E-16	3.383E-10	1.589E-08	4.471E-08	7.707E-08	5.014E-08	3.574E-08	2.713E-08	2.156E-08	1.771E-08	1.494E-08
W	7.051E-10	3.130E-08	9.540E-08	1.143E-07	1.042E-07	6.580E-08	4.564E-08	3.379E-08	2.624E-08	2.111E-08	1.746E-08
WNW	7.742E-11	7.569E-09	8.497E-08	1.662E-07	2.214E-07	1.380E-07	9.529E-08	7.476E-08	6.126E-08	4.913E-08	4.056E-08
NW	7.363E-16	8.507E-10	5.297E-08	1.684E-07	3.494E-07	2.127E-07	1.442E-07	1.077E-07	8.432E-08	6.696E-08	5.479E-08
NNW	2.221E-10	1.369E-08	5.532E-08	9.976E-08	1.505E-07	1.533E-07	1.492E-07	1.397E-07	1.299E-07	1.029E-07	8.413E-08
N	4.483E-09	2.738E-08	4.742E-08	5.553E-08	5.894E-08	5.477E-08	4.837E-08	4.140E-08	3.574E-08	3.120E-08	2.754E-08
NNE	2.875E-09	1.679E-08	3.022E-08	3.827E-08	4.328E-08	3.950E-08	3.405E-08	2.908E-08	2.498E-08	2.168E-08	1.904E-08
NE	3.814E-16	4.313E-10	7.735E-09	1.614E-08	2.257E-08	2.160E-08	1.894E-08	1.630E-08	1.405E-08	1.222E-08	1.073E-08
ENE	2.893E-11	2.240E-09	1.351E-08	2.457E-08	3.139E-08	2.859E-08	2.423E-08	2.034E-08	1.720E-08	1.472E-08	1.277E-08
E	3.389E-11	2.824E-09	1.232E-08	2.007E-08	2.376E-08	2.097E-08	1.748E-08	1.453E-08	1.222E-08	1.042E-08	9.021E-09
ESE	1.318E-15	8.426E-10	1.221E-08	2.285E-08	2.866E-08	2.605E-08	2.217E-08	1.872E-08	1.593E-08	1.370E-08	1.194E-08
SE	2.112E-11	3.286E-09	3.475E-08	6.296E-08	7.519E-08	6.552E-08	5.395E-08	4.438E-08	3.696E-08	3.126E-08	2.684E-08
SSE	5.786E-11	5.448E-09	4.031E-08	7.253E-08	8.956E-08	8.022E-08	6.740E-08	5.628E-08	4.744E-08	4.050E-08	3.505E-08

ANNUAL AVERAGE CHI/Q (SEC/METER CUBED) DISTANCE IN MILES FROM THE SITE

SECTOR	5.000	7.500	10.000	15.000	20.000	25.000	30.000	35.000	40.000	45.000	50.000
S	2.677E-08	2.013E-08	1.322E-08	7.678E-09	5.538E-09	4.254E-09	3.308E-09	2.674E-09	2.250E-09	1.926E-09	1.662E-09
SSW	2.260E-08	1.763E-08	1.145E-08	6.560E-09	4.663E-09	3.480E-09	2.696E-09	2.172E-09	1.801E-09	1.526E-09	1.315E-09
SW	1.095E-08	1.427E-08	9.866E-09	6.081E-09	4.801E-09	3.896E-09	3.263E-09	2.636E-09	2.187E-09	1.852E-09	1.594E-09
WSW	1.381E-08	1.134E-08	8.966E-09	6.098E-09	4.119E-09	3.032E-09	2.356E-09	1.898E-09	1.571E-09	1.327E-09	1.140E-09
W	1.476E-08	8.072E-09	5.796E-09	3.780E-09	2.782E-09	2.035E-09	1.567E-09	1.256E-09	1.035E-09	8.724E-10	7.478E-10
WNW	3.481E-08	2.039E-08	1.427E-08	8.989E-09	6.216E-09	4.657E-09	3.689E-09	3.005E-09	2.498E-09	2.118E-09	1.826E-09
NW	4.645E-08	2.572E-08	1.736E-08	1.031E-08	6.885E-09	5.032E-09	3.939E-09	3.177E-09	2.628E-09	2.221E-09	1.910E-09
NNW	7.214E-08	4.150E-08	2.705E-08	1.560E-08	1.058E-08	7.832E-09	6.182E-09	5.057E-09	4.279E-09	3.657E-09	3.167E-09
N	2.463E-08	1.623E-08	1.426E-08	1.276E-08	1.168E-08	1.003E-08	7.898E-09	6.418E-09	5.348E-09	4.553E-09	3.940E-09
NNE	2.107E-08	3.575E-08	2.328E-08	1.341E-08	9.084E-09	6.719E-09	5.251E-09	4.262E-09	3.556E-09	3.030E-09	2.624E-09
NE	1.178E-08	2.194E-08	1.434E-08	8.294E-09	5.630E-09	4.169E-09	3.310E-09	2.713E-09	2.282E-09	1.942E-09	1.679E-09
ENE	1.312E-08	1.664E-08	1.087E-08	6.262E-09	4.227E-09	3.113E-09	2.529E-09	2.098E-09	1.738E-09	1.471E-09	1.266E-09
E	9.339E-09	1.340E-08	8.839E-09	5.167E-09	3.531E-09	2.628E-09	2.063E-09	1.681E-09	1.461E-09	1.281E-09	1.110E-09
ESE	1.223E-08	1.661E-08	1.121E-08	6.737E-09	4.679E-09	3.520E-09	2.786E-09	2.284E-09	1.922E-09	1.649E-09	1.436E-09
SE	2.334E-08	1.385E-08	1.040E-08	7.354E-09	5.388E-09	4.271E-09	3.554E-09	3.050E-09	2.545E-09	2.168E-09	1.878E-09
SSE	3.686E-08	4.768E-08	3.074E-08	1.745E-08	1.170E-08	8.580E-09	6.658E-09	5.371E-09	4.457E-09	3.778E-09	3.258E-09

CHI/Q (SEC/METER CUBED) FOR EACH SEGMENT
SEGMENT BOUNDARIES IN MILES FROM THE SITE

DIRECTION FROM SITE	.5-1	1-2	2-3	3-4	4-5	5-10	10-20	20-30	30-40	40-50
S	3.116E-08	4.525E-08	3.438E-08	2.630E-08	2.772E-08	1.854E-08	7.959E-09	4.218E-09	2.694E-09	1.924E-09
SSW	1.626E-08	3.037E-08	2.879E-08	2.941E-08	2.464E-08	1.599E-08	6.804E-09	3.482E-09	2.181E-09	1.530E-09
SW	1.435E-08	3.484E-08	2.382E-08	1.520E-08	1.146E-08	1.157E-08	6.353E-09	3.884E-09	2.644E-09	1.856E-09
WSW	2.524E-08	5.791E-08	3.614E-08	2.169E-08	1.534E-08	1.084E-08	5.856E-09	3.051E-09	1.904E-09	1.330E-09
W	8.957E-08	8.938E-08	4.628E-08	2.645E-08	1.754E-08	8.546E-09	3.784E-09	2.047E-09	1.261E-09	8.745E-10
WNW	1.039E-07	1.721E-07	9.847E-08	6.050E-08	4.097E-08	2.087E-08	8.930E-09	4.686E-09	3.007E-09	2.122E-09
NW	9.268E-08	2.484E-07	1.479E-07	8.440E-08	5.531E-08	2.661E-08	1.035E-08	5.089E-09	3.185E-09	2.227E-09
NNW	6.582E-08	1.405E-07	1.465E-07	1.224E-07	8.526E-08	4.189E-08	1.592E-08	7.905E-09	5.082E-09	3.660E-09
N	4.657E-08	5.633E-08	4.729E-08	3.563E-08	2.755E-08	1.722E-08	1.262E-08	9.619E-09	6.433E-09	4.562E-09
NNE	3.081E-08	4.049E-08	3.351E-08	2.490E-08	2.057E-08	2.694E-08	1.368E-08	6.762E-09	4.276E-09	3.035E-09
NE	9.849E-09	2.071E-08	1.859E-08	1.400E-08	1.156E-08	1.630E-08	8.453E-09	4.215E-09	2.720E-09	1.945E-09
ENE	1.592E-08	2.863E-08	2.384E-08	1.716E-08	1.348E-08	1.329E-08	6.382E-09	3.177E-09	2.084E-09	1.474E-09
E	1.366E-08	2.170E-08	1.723E-08	1.219E-08	9.554E-09	1.047E-08	5.256E-09	2.643E-09	1.706E-09	1.271E-09
ESE	1.441E-08	2.621E-08	2.183E-08	1.588E-08	1.257E-08	1.324E-08	6.817E-09	3.536E-09	2.290E-09	1.651E-09
SE	4.030E-08	6.817E-08	5.321E-08	3.691E-08	2.685E-08	1.443E-08	7.158E-09	4.282E-09	3.002E-09	2.172E-09
SSE	4.688E-08	8.162E-08	6.637E-08	4.732E-08	3.734E-08	3.775E-08	1.785E-08	8.643E-09	5.390E-09	3.787E-09

ERP ELEVATED STACK RELEASES - OCT-DEC 2012
8.000 DAY DECAY, DEPLETED
CORRECTED USING STANDARD OPEN TERRAIN FACTORS

ANNUAL AVERAGE CHI/Q (SEC/METER CUBED) DISTANCE IN MILES FROM THE SITE

SECTOR	.250	.500	.750	1.000	1.500	2.000	2.500	3.000	3.500	4.000	4.500
S	1.243E-10	7.717E-09	2.899E-08	4.415E-08	4.899E-08	4.175E-08	3.394E-08	2.766E-08	2.288E-08	2.571E-08	2.851E-08
SSW	1.283E-15	9.121E-10	1.364E-08	2.592E-08	3.291E-08	3.009E-08	2.570E-08	2.912E-08	3.058E-08	2.676E-08	2.372E-08
SW	2.350E-16	2.278E-10	9.146E-09	2.535E-08	4.491E-08	3.134E-08	2.327E-08	1.819E-08	1.479E-08	1.239E-08	1.064E-08
WSW	3.639E-16	3.384E-10	1.590E-08	4.470E-08	7.631E-08	4.929E-08	3.495E-08	2.645E-08	2.096E-08	1.719E-08	1.448E-08
W	7.052E-10	3.095E-08	9.460E-08	1.130E-07	1.023E-07	6.417E-08	4.428E-08	3.266E-08	2.527E-08	2.028E-08	1.674E-08
WNW	7.744E-11	7.548E-09	8.490E-08	1.652E-07	2.186E-07	1.353E-07	9.300E-08	7.280E-08	5.958E-08	4.762E-08	3.916E-08
NW	7.364E-16	8.511E-10	5.302E-08	1.680E-07	3.465E-07	2.097E-07	1.415E-07	1.055E-07	8.237E-08	6.517E-08	5.311E-08
NNW	2.222E-10	1.359E-08	5.486E-08	9.934E-08	1.492E-07	1.513E-07	1.471E-07	1.377E-07	1.282E-07	1.012E-07	8.237E-08
N	4.484E-09	2.715E-08	4.677E-08	5.494E-08	5.819E-08	5.389E-08	4.742E-08	4.047E-08	3.485E-08	3.035E-08	2.675E-08
NNE	2.876E-09	1.665E-08	2.984E-08	3.793E-08	4.280E-08	3.887E-08	3.333E-08	2.835E-08	2.426E-08	2.098E-08	1.837E-08
NE	3.815E-16	4.315E-10	7.743E-09	1.616E-08	2.244E-08	2.133E-08	1.859E-08	1.592E-08	1.367E-08	1.184E-08	1.036E-08
ENE	2.893E-11	2.227E-09	1.347E-08	2.455E-08	3.115E-08	2.815E-08	2.369E-08	1.976E-08	1.661E-08	1.414E-08	1.221E-08
E	3.390E-11	2.805E-09	1.225E-08	2.001E-08	2.354E-08	2.062E-08	1.706E-08	1.409E-08	1.178E-08	9.995E-09	8.610E-09
ESE	1.318E-15	8.429E-10	1.221E-08	2.287E-08	2.846E-08	2.567E-08	2.171E-08	1.823E-08	1.544E-08	1.323E-08	1.148E-08
SE	2.112E-11	3.277E-09	3.474E-08	6.297E-08	7.459E-08	6.443E-08	5.263E-08	4.297E-08	3.555E-08	2.988E-08	2.550E-08
SSE	5.787E-11	5.421E-09	4.023E-08	7.249E-08	8.885E-08	7.897E-08	6.588E-08	5.466E-08	4.581E-08	3.891E-08	3.352E-08

ANNUAL AVERAGE CHI/Q (SEC/METER CUBED) DISTANCE IN MILES FROM THE SITE

SECTOR	5.000	7.500	10.000	15.000	20.000	25.000	30.000	35.000	40.000	45.000	50.000
S	2.573E-08	1.917E-08	1.224E-08	6.714E-09	4.538E-09	3.304E-09	2.468E-09	1.925E-09	1.577E-09	1.320E-09	1.117E-09
SSW	2.196E-08	1.694E-08	1.068E-08	5.754E-09	3.840E-09	2.774E-09	2.089E-09	1.642E-09	1.332E-09	1.106E-09	9.361E-10
SW	1.070E-08	1.410E-08	9.500E-09	5.533E-09	4.080E-09	3.135E-09	2.564E-09	2.035E-09	1.664E-09	1.391E-09	1.184E-09
WSW	1.341E-08	1.098E-08	8.497E-09	5.574E-09	3.658E-09	2.632E-09	2.009E-09	1.593E-09	1.302E-09	1.089E-09	9.266E-10
W	1.412E-08	7.675E-09	5.490E-09	3.431E-09	2.410E-09	1.718E-09	1.294E-09	1.017E-09	8.253E-10	6.855E-10	5.801E-10
WNW	3.348E-08	1.914E-08	1.304E-08	7.743E-09	4.987E-09	3.547E-09	2.725E-09	2.166E-09	1.762E-09	1.464E-09	1.239E-09
NW	4.482E-08	2.416E-08	1.584E-08	8.908E-09	5.665E-09	3.978E-09	3.022E-09	2.380E-09	1.927E-09	1.598E-09	1.350E-09
NNW	7.032E-08	3.934E-08	2.483E-08	1.338E-08	8.381E-09	5.808E-09	4.346E-09	3.427E-09	2.821E-09	2.352E-09	1.991E-09
N	2.389E-08	1.568E-08	1.384E-08	1.254E-08	1.131E-08	9.311E-09	7.164E-09	5.707E-09	4.673E-09	3.915E-09	3.340E-09
NNE	2.037E-08	3.489E-08	2.204E-08	1.205E-08	7.770E-09	5.520E-09	4.168E-09	3.283E-09	2.667E-09	2.218E-09	1.879E-09
NE	1.140E-08	2.149E-08	1.364E-08	7.481E-09	4.821E-09	3.422E-09	2.633E-09	2.109E-09	1.739E-09	1.453E-09	1.236E-09
ENE	1.254E-08	1.608E-08	1.023E-08	5.577E-09	3.533E-09	2.468E-09	1.914E-09	1.533E-09	1.240E-09	1.027E-09	8.667E-10
E	8.912E-09	1.295E-08	8.301E-09	4.568E-09	2.909E-09	2.042E-09	1.524E-09	1.187E-09	9.895E-10	8.379E-10	7.085E-10
ESE	1.176E-08	1.618E-08	1.062E-08	6.012E-09	3.891E-09	2.760E-09	2.077E-09	1.628E-09	1.315E-09	1.087E-09	9.152E-10
SE	2.207E-08	1.285E-08	9.566E-09	6.745E-09	4.936E-09	3.924E-09	3.283E-09	2.825E-09	2.319E-09	1.947E-09	1.664E-09
SSE	3.525E-08	4.597E-08	2.876E-08	1.551E-08	9.914E-09	6.991E-09	5.247E-09	4.110E-09	3.323E-09	2.752E-09	2.322E-09

CHI/Q (SEC/METER CUBED) FOR EACH SEGMENT
SEGMENT BOUNDARIES IN MILES FROM THE SITE

DIRECTION FROM SITE	.5-1	1-2	2-3	3-4	4-5	5-10	10-20	20-30	30-40	40-50
S	3.100E-08	4.470E-08	3.351E-08	2.532E-08	2.665E-08	1.755E-08	6.975E-09	3.298E-09	1.947E-09	1.321E-09
SSW	1.627E-08	3.010E-08	2.824E-08	2.871E-08	2.397E-08	1.528E-08	5.998E-09	2.784E-09	1.652E-09	1.110E-09
SW	1.436E-08	3.453E-08	2.339E-08	1.485E-08	1.118E-08	1.130E-08	5.769E-09	3.159E-09	2.045E-09	1.395E-09
WSW	2.524E-08	5.728E-08	3.537E-08	2.109E-08	1.489E-08	1.042E-08	5.372E-09	2.656E-09	1.601E-09	1.092E-09
W	8.865E-08	8.774E-08	4.493E-08	2.548E-08	1.682E-08	8.136E-09	3.435E-09	1.733E-09	1.023E-09	6.879E-10
WNW	1.034E-07	1.697E-07	9.621E-08	5.880E-08	3.956E-08	1.962E-08	7.695E-09	3.602E-09	2.171E-09	1.469E-09
NW	9.254E-08	2.460E-07	1.453E-07	8.242E-08	5.361E-08	2.505E-08	9.007E-09	4.046E-09	2.391E-09	1.603E-09
NNW	6.546E-08	1.390E-07	1.445E-07	1.206E-07	8.349E-08	3.978E-08	1.370E-08	5.909E-09	3.459E-09	2.357E-09
N	4.604E-08	5.556E-08	4.637E-08	3.474E-08	2.676E-08	1.669E-08	1.228E-08	8.986E-09	5.730E-09	3.927E-09
NNE	3.051E-08	3.997E-08	3.281E-08	2.418E-08	1.988E-08	2.595E-08	1.237E-08	5.579E-09	3.301E-09	2.225E-09
NE	9.861E-09	2.055E-08	1.825E-08	1.361E-08	1.118E-08	1.576E-08	7.667E-09	3.479E-09	2.118E-09	1.457E-09
ENE	1.590E-08	2.835E-08	2.331E-08	1.657E-08	1.290E-08	1.269E-08	5.703E-09	2.530E-09	1.530E-09	1.031E-09
E	1.360E-08	2.146E-08	1.682E-08	1.176E-08	9.132E-09	9.988E-09	4.660E-09	2.066E-09	1.208E-09	8.349E-10
ESE	1.442E-08	2.598E-08	2.138E-08	1.539E-08	1.210E-08	1.273E-08	6.094E-09	2.788E-09	1.637E-09	1.091E-09
SE	4.029E-08	6.749E-08	5.191E-08	3.551E-08	2.553E-08	1.344E-08	6.568E-09	3.938E-09	2.763E-09	1.952E-09
SSE	4.683E-08	8.082E-08	6.488E-08	4.571E-08	3.576E-08	3.594E-08	1.597E-08	7.073E-09	4.135E-09	2.762E-09

ERP ELEVATED STACK RELEASES - OCT-DEC 2012
CORRECTED USING STANDARD OPEN TERRAIN FACTORS

********** RELATIVE DEPOSITION PER UNIT AREA (M**-2) AT FIXED POINTS BY DOWNWIND SECTORS **********

DIRECTION FROM SITE	DISTANCES IN MILES .25	.50	.75	1.00	1.50	2.00	2.50	3.00	3.50	4.00	4.50
S	1.393E-09	1.642E-09	2.148E-09	1.915E-09	1.112E-09	7.288E-10	5.092E-10	3.721E-10	2.810E-10	2.341E-10	2.092E-10
SSW	8.522E-11	5.113E-10	1.089E-09	1.128E-09	7.044E-10	4.723E-10	3.336E-10	2.451E-10	2.351E-10	1.777E-10	1.390E-10
SW	2.098E-11	1.259E-10	2.680E-10	2.776E-10	3.340E-10	1.831E-10	1.139E-10	7.751E-11	5.609E-11	4.245E-11	3.323E-11
WSW	3.016E-11	1.809E-10	3.852E-10	9.663E-10	4.938E-10	2.686E-10	1.662E-10	1.127E-10	8.135E-11	6.147E-11	4.809E-11
W	7.930E-10	2.227E-09	1.834E-09	1.220E-09	5.627E-10	3.024E-10	1.860E-10	1.257E-10	9.054E-11	6.831E-11	5.339E-11
WNW	3.120E-10	5.281E-10	2.474E-09	2.001E-09	1.227E-09	6.249E-10	3.748E-10	2.549E-10	1.949E-10	1.534E-10	1.278E-10
NW	7.080E-11	4.248E-10	9.044E-10	2.406E-09	1.621E-09	8.120E-10	4.866E-10	3.310E-10	2.487E-10	2.018E-10	1.739E-10
NNW	2.150E-09	2.149E-09	2.418E-09	2.010E-09	2.081E-09	1.126E-09	6.953E-10	5.925E-10	4.450E-10	3.609E-10	3.108E-10
N	3.946E-09	3.517E-09	3.445E-09	2.641E-09	1.397E-09	8.857E-10	6.090E-10	4.414E-10	3.320E-10	2.570E-10	2.035E-10
NNE	2.110E-09	1.913E-09	1.915E-09	1.489E-09	7.956E-10	5.063E-10	3.488E-10	2.530E-10	1.904E-10	1.474E-10	1.167E-10
NE	3.802E-11	2.281E-10	4.857E-10	5.031E-10	3.143E-10	2.107E-10	1.488E-10	1.093E-10	8.281E-11	6.427E-11	5.090E-11
ENE	3.107E-10	5.203E-10	8.382E-10	8.064E-10	4.868E-10	3.230E-10	2.271E-10	1.664E-10	1.259E-10	9.766E-11	7.734E-11
E	2.989E-10	4.495E-10	6.875E-10	6.502E-10	3.893E-10	2.577E-10	1.809E-10	1.325E-10	1.002E-10	7.771E-11	6.154E-11
ESE	8.391E-11	5.034E-10	1.072E-09	1.110E-09	6.935E-10	4.650E-10	3.285E-10	2.413E-10	1.827E-10	1.418E-10	1.123E-10
SE	4.851E-10	1.566E-09	3.066E-09	3.114E-09	1.928E-09	1.289E-09	9.097E-10	6.678E-10	5.057E-10	3.924E-10	3.108E-10
SSE	7.079E-10	1.560E-09	2.782E-09	2.758E-09	1.689E-09	1.126E-09	7.929E-10	5.816E-10	4.402E-10	3.416E-10	2.705E-10

DIRECTION FROM SITE	DISTANCES IN MILES 5.00	7.50	10.00	15.00	20.00	25.00	30.00	35.00	40.00	45.00	50.00
S	1.682E-10	1.075E-10	7.137E-11	4.031E-11	2.531E-11	1.968E-11	1.405E-11	1.051E-11	8.157E-12	6.516E-12	5.318E-12
SSW	1.117E-10	9.397E-11	6.671E-11	3.985E-11	2.501E-11	1.698E-11	1.217E-11	9.135E-12	7.103E-12	5.674E-12	4.631E-12
SW	2.702E-11	3.134E-11	2.352E-11	1.467E-11	9.406E-12	5.954E-12	4.022E-12	3.020E-12	2.348E-12	1.876E-12	1.531E-12
WSW	3.963E-11	3.161E-11	2.232E-11	1.380E-11	8.348E-12	5.598E-12	4.090E-12	3.071E-12	2.388E-12	1.907E-12	1.557E-12
W	4.292E-11	1.926E-11	2.195E-11	1.339E-11	8.558E-12	5.896E-12	4.225E-12	3.172E-12	2.467E-12	1.970E-12	1.608E-12
WNW	1.127E-10	7.137E-11	5.207E-11	3.181E-11	1.941E-11	1.303E-11	9.152E-12	6.874E-12	5.392E-12	4.307E-12	3.516E-12
NW	1.572E-10	1.085E-10	8.205E-11	4.803E-11	2.923E-11	1.957E-11	1.418E-11	1.065E-11	8.327E-12	6.651E-12	5.429E-12
NNW	2.806E-10	1.930E-10	1.459E-10	9.159E-11	5.890E-11	3.904E-11	2.522E-11	1.849E-11	1.435E-11	1.146E-11	9.358E-12
N	1.642E-10	7.806E-11	4.780E-11	2.542E-11	8.906E-11	5.021E-11	3.593E-11	2.698E-11	2.098E-11	1.676E-11	1.368E-11
NNE	9.414E-11	1.726E-10	1.072E-10	5.581E-11	3.408E-11	2.280E-11	1.628E-11	1.217E-11	9.431E-12	7.512E-12	6.117E-12
NE	4.099E-11	8.195E-11	5.170E-11	2.740E-11	1.682E-11	1.124E-11	7.928E-12	5.892E-12	4.582E-12	3.699E-12	3.020E-12
ENE	6.230E-11	5.986E-11	4.192E-11	2.477E-11	1.570E-11	1.043E-11	7.366E-12	5.504E-12	4.281E-12	3.423E-12	2.797E-12
E	4.958E-11	6.013E-11	4.411E-11	2.706E-11	1.729E-11	1.146E-11	8.046E-12	5.900E-12	4.498E-12	3.467E-12	2.829E-12
ESE	9.047E-11	9.492E-11	6.767E-11	4.056E-11	2.575E-11	1.707E-11	1.201E-11	8.824E-12	6.743E-12	5.311E-12	4.285E-12
SE	2.503E-10	1.185E-10	7.225E-11	3.797E-11	2.308E-11	1.578E-11	1.169E-11	1.835E-11	1.415E-11	1.125E-11	9.156E-12
SSE	2.179E-10	2.851E-10	1.751E-10	9.007E-11	5.481E-11	3.670E-11	2.624E-11	1.966E-11	1.526E-11	1.217E-11	9.926E-12

********** RELATIVE DEPOSITION PER UNIT AREA (M**-2) BY DOWNWIND SECTORS **********

DIRECTION FROM SITE	SEGMENT BOUNDARIES IN MILES .5-1	1-2	2-3	3-4	4-5	5-10	10-20	20-30	30-40	40-50
S	1.932E-09	1.120E-09	5.129E-10	2.892E-10	2.014E-10	1.049E-10	4.054E-11	1.893E-11	1.063E-11	6.558E-12
SSW	9.777E-10	6.953E-10	3.352E-10	2.161E-10	1.404E-10	8.580E-11	3.922E-11	1.719E-11	9.227E-12	5.711E-12
SW	2.407E-10	2.544E-10	1.178E-10	5.701E-11	3.366E-11	2.691E-11	1.430E-11	6.102E-12	3.050E-12	1.888E-12
WSW	5.981E-10	4.987E-10	1.721E-10	8.272E-11	4.892E-11	2.926E-11	1.327E-11	5.728E-12	3.102E-12	1.920E-12
W	1.649E-09	5.932E-10	1.929E-10	9.212E-11	5.393E-11	2.572E-11	1.315E-11	5.937E-12	3.204E-12	1.983E-12
WNW	1.831E-09	1.131E-09	3.936E-10	1.962E-10	1.298E-10	7.198E-11	3.080E-11	1.318E-11	6.960E-12	4.336E-12
NW	1.465E-09	1.436E-09	5.111E-10	2.544E-10	1.760E-10	1.076E-10	4.723E-11	1.999E-11	1.077E-11	6.695E-12
NNW	2.177E-09	1.641E-09	7.691E-10	4.551E-10	3.144E-10	1.915E-10	8.913E-11	3.881E-11	1.884E-11	1.154E-11
N	3.103E-09	1.446E-09	6.158E-10	3.347E-10	2.048E-10	8.374E-11	5.868E-11	5.486E-11	2.725E-11	1.687E-11
NNE	1.725E-09	8.212E-10	3.525E-10	1.919E-10	1.174E-10	1.261E-10	5.758E-11	2.320E-11	1.230E-11	7.564E-12
NE	4.362E-10	3.102E-10	1.495E-10	8.333E-11	5.119E-11	5.940E-11	2.810E-11	1.140E-11	5.975E-12	3.709E-12
ENE	7.534E-10	4.851E-10	2.284E-10	1.267E-10	7.779E-11	5.243E-11	2.455E-11	1.061E-11	5.570E-12	3.445E-12
E	6.180E-10	3.888E-10	1.820E-10	1.008E-10	6.190E-11	5.067E-11	2.650E-11	1.165E-11	5.979E-12	3.536E-12
ESE	9.627E-10	6.846E-10	3.300E-10	1.839E-10	1.130E-10	8.182E-11	4.000E-11	1.736E-11	8.941E-12	5.356E-12
SE	2.754E-09	1.908E-09	9.142E-10	5.089E-10	3.126E-10	1.272E-10	3.897E-11	1.609E-11	1.485E-11	1.133E-11
SSE	2.500E-09	1.676E-09	7.971E-10	4.431E-10	2.721E-10	2.213E-10	9.330E-11	3.735E-11	1.987E-11	1.226E-11

ERP ELEVATED STACK RELEASES - OCT-DEC 2012
CORRECTED USING STANDARD OPEN TERRAIN FACTORS
SPECIFIC POINTS OF INTEREST

RELEASE ID	TYPE OF LOCATION	DIRECTION FROM SITE	DIST. (MI)	X/Q (SEC/M3) NO DECAY UNDEPLETED	X/Q (SEC/M3) 2.26 DAY DECAY UNDEPLETED	X/Q (SEC/M3) 8.0 DAY DECAY DEPLETED	D/Q (PER SQ.METER)
A	Site Boundary	S	.80	3.3E-08	3.3E-08	3.3E-08	2.1E-09
A	Site Boundary	SSW	.82	1.8E-08	1.8E-08	1.8E-08	1.2E-09
A	Site Boundary	SW	.97	2.4E-08	2.4E-08	2.4E-08	2.8E-10
A	Site Boundary	WSW	.93	3.6E-08	3.6E-08	3.6E-08	7.6E-10
A	Site Boundary	W	.91	1.1E-07	1.1E-07	1.1E-07	1.3E-09
A	Site Boundary	WNW	.94	1.5E-07	1.5E-07	1.5E-07	2.2E-09
A	Site Boundary	NW	.81	8.0E-08	7.9E-08	8.0E-08	9.6E-10
A	Site Boundary	NNW	.69	4.1E-08	4.1E-08	4.1E-08	2.3E-09
A	Site Boundary	N	.67	4.1E-08	4.1E-08	4.0E-08	3.4E-09
A	Site Boundary	NNE	.60	2.1E-08	2.1E-08	2.1E-08	1.9E-09
A	Site Boundary	NE	.62	2.8E-09	2.8E-09	2.8E-09	3.5E-10
A	Site Boundary	ENE	.59	4.7E-09	4.7E-09	4.7E-09	6.2E-10
A	Site Boundary	E	.53	3.4E-09	3.4E-09	3.3E-09	4.7E-10
A	Site Boundary	ESE	.54	1.6E-09	1.6E-09	1.6E-09	5.9E-10
A	Site Boundary	SE	.65	1.8E-08	1.8E-08	1.8E-08	2.5E-09
A	Site Boundary	SSE	.81	5.0E-08	5.0E-08	5.0E-08	2.9E-09
A	Nearest Res	SSW	3.00	3.0E-08	3.0E-08	2.9E-08	2.5E-10
A	Nearest Res	SW	1.30	4.0E-08	4.0E-08	4.0E-08	4.4E-10
A	Nearest Res	WSW	1.90	5.4E-08	5.4E-08	5.3E-08	3.0E-10
A	Nearest Res	W	2.90	3.6E-08	3.6E-08	3.5E-08	1.4E-10
A	Nearest Res	WNW	1.70	1.8E-07	1.8E-07	1.8E-07	9.1E-10
A	Nearest Res	NW	.90	1.2E-07	1.2E-07	1.2E-07	2.4E-09
A	Nearest Res	NNW	1.90	1.5E-07	1.5E-07	1.5E-07	1.3E-09
A	Nearest Res	N	3.00	4.2E-08	4.1E-08	4.0E-08	4.4E-10
A	Nearest Res	NNE	1.90	4.1E-08	4.1E-08	4.0E-08	5.5E-10
A	Nearest Res	NE	3.00	1.6E-08	1.6E-08	1.6E-08	1.1E-10
A	Nearest Res	ENE	1.70	3.1E-08	3.1E-08	3.0E-08	4.1E-10
A	Nearest Res	E	2.20	2.0E-08	2.0E-08	1.9E-08	2.2E-10
A	Nearest Res	ESE	2.30	2.4E-08	2.4E-08	2.3E-08	3.8E-10
A	Nearest Res	SE	3.00	4.5E-08	4.4E-08	4.3E-08	6.7E-10
A	Nearest Cow	NNW	3.50	1.3E-07	1.3E-07	1.3E-07	4.5E-10
A	Nearest Garde	SSW	3.00	3.0E-08	3.0E-08	2.9E-08	2.5E-10
A	Nearest Garde	SW	1.30	4.0E-08	4.0E-08	4.0E-08	4.4E-10
A	Nearest Garde	WSW	1.90	5.4E-08	5.4E-08	5.3E-08	3.0E-10
A	Nearest Garde	W	2.90	3.6E-08	3.6E-08	3.5E-08	1.4E-10
A	Nearest Garde	WNW	2.40	1.0E-07	1.0E-07	1.0E-07	4.1E-10
A	Nearest Garde	NW	2.90	1.1E-07	1.1E-07	1.1E-07	3.5E-10
A	Nearest Garde	NNW	2.80	1.4E-07	1.4E-07	1.4E-07	6.7E-10
A	Nearest Garde	ENE	1.70	3.1E-08	3.1E-08	3.0E-08	4.1E-10
A	Nearest Garde	E	2.20	2.0E-08	2.0E-08	1.9E-08	2.2E-10
A	Nearest Garde	ESE	2.30	2.4E-08	2.4E-08	2.3E-08	3.8E-10
A	MAXIMUM CHI/Q	S	1.50	5.0E-08	4.9E-08	4.9E-08	1.1E-09
A	MAXIMUM CHI/Q	SSW	1.50	3.3E-08	3.3E-08	3.3E-08	7.0E-10
A	MAXIMUM CHI/Q	SW	1.50	4.5E-08	4.5E-08	4.5E-08	3.3E-10
A	MAXIMUM CHI/Q	WSW	1.50	7.7E-08	7.7E-08	7.6E-08	4.9E-10
A	MAXIMUM CHI/Q	W	1.00	1.1E-07	1.1E-07	1.1E-07	1.2E-09
A	MAXIMUM CHI/Q	WNW	1.50	2.2E-07	2.2E-07	2.2E-07	1.2E-09
A	MAXIMUM CHI/Q	NW	1.50	3.5E-07	3.5E-07	3.5E-07	1.6E-09
A	MAXIMUM CHI/Q	NNW	2.00	1.5E-07	1.5E-07	1.5E-07	1.1E-09
A	MAXIMUM CHI/Q	N	1.50	5.9E-08	5.9E-08	5.8E-08	1.4E-09
A	MAXIMUM CHI/Q	NNE	1.50	4.3E-08	4.3E-08	4.3E-08	8.0E-10
A	MAXIMUM CHI/Q	NE	1.50	2.3E-08	2.3E-08	2.2E-08	3.1E-10
A	MAXIMUM CHI/Q	ENE	1.50	3.1E-08	3.1E-08	3.1E-08	4.9E-10
A	MAXIMUM CHI/Q	E	1.50	2.4E-08	2.4E-08	2.4E-08	3.9E-10
A	MAXIMUM CHI/Q	ESE	1.50	2.9E-08	2.9E-08	2.8E-08	6.9E-10
A	MAXIMUM CHI/Q	SE	1.50	7.5E-08	7.5E-08	7.5E-08	1.9E-09
A	MAXIMUM CHI/Q	SSE	1.50	9.0E-08	9.0E-08	8.9E-08	1.7E-09

Atmospheric Diffusion Estimates

Elevated Releases

July-December 2012

B312

ERP ELEVATED STACK RELEASES - JUL-DEC 2012
NO DECAY, UNDEPLETED
CORRECTED USING STANDARD OPEN TERRAIN FACTORS

ANNUAL AVERAGE CHI/Q (SEC/METER CUBED) DISTANCE IN MILES FROM THE SITE

SECTOR	.250	.500	.750	1.000	1.500	2.000	2.500	3.000	3.500	4.000	4.500
S	2.505E-10	1.668E-08	4.937E-08	6.918E-08	7.567E-08	6.540E-08	5.401E-08	4.463E-08	3.735E-08	4.255E-08	4.695E-08
SSW	4.477E-11	4.351E-09	2.189E-08	3.725E-08	4.656E-08	4.270E-08	3.659E-08	4.107E-08	4.299E-08	3.778E-08	3.366E-08
SW	3.169E-11	3.897E-09	2.452E-08	5.548E-08	9.727E-08	6.803E-08	5.029E-08	3.899E-08	3.138E-08	2.601E-08	2.206E-08
WSW	6.558E-11	6.184E-09	3.346E-08	7.530E-08	1.370E-07	9.136E-08	6.601E-08	5.051E-08	4.031E-08	3.321E-08	2.804E-08
W	3.972E-09	4.686E-08	1.177E-07	1.411E-07	1.353E-07	8.698E-08	6.122E-08	4.592E-08	3.607E-08	2.933E-08	2.449E-08
WNW	4.514E-10	2.730E-08	1.159E-07	1.963E-07	2.517E-07	1.563E-07	1.078E-07	8.455E-08	6.939E-08	5.573E-08	4.607E-08
NW	1.039E-08	3.980E-08	1.152E-07	2.277E-07	3.872E-07	2.354E-07	1.603E-07	1.212E-07	9.606E-08	7.681E-08	6.327E-08
NNW	2.604E-08	5.421E-08	9.435E-08	1.252E-07	1.675E-07	1.674E-07	1.641E-07	1.585E-07	1.543E-07	1.231E-07	1.012E-07
N	8.526E-08	1.437E-07	1.345E-07	1.037E-07	7.928E-08	6.620E-08	5.594E-08	4.693E-08	4.006E-08	3.474E-08	3.054E-08
NNE	1.267E-08	7.209E-08	9.897E-08	8.701E-08	6.967E-08	5.605E-08	4.555E-08	3.766E-08	3.172E-08	2.717E-08	2.365E-08
NE	5.083E-11	3.902E-09	1.299E-08	1.976E-08	2.384E-08	2.192E-08	1.892E-08	1.619E-08	1.393E-08	1.212E-08	1.066E-08
ENE	1.446E-11	1.178E-09	7.878E-09	1.463E-08	1.885E-08	1.723E-08	1.464E-08	1.233E-08	1.045E-08	8.970E-09	7.798E-09
E	9.514E-10	4.305E-09	9.210E-09	1.366E-08	1.629E-08	1.468E-08	1.244E-08	1.048E-08	8.894E-09	7.645E-09	6.658E-09
ESE	1.207E-10	7.601E-09	1.746E-08	2.121E-08	2.173E-08	1.876E-08	1.563E-08	1.304E-08	1.101E-08	9.433E-09	8.191E-09
SE	4.874E-10	4.761E-09	2.309E-08	3.832E-08	4.467E-08	3.893E-08	3.217E-08	2.657E-08	2.223E-08	1.887E-08	1.626E-08
SSE	5.547E-11	4.555E-09	2.861E-08	5.019E-08	6.175E-08	5.557E-08	4.694E-08	3.941E-08	3.337E-08	2.862E-08	2.488E-08

ANNUAL AVERAGE CHI/Q (SEC/METER CUBED) DISTANCE IN MILES FROM THE SITE

SECTOR	5.000	7.500	10.000	15.000	20.000	25.000	30.000	35.000	40.000	45.000	50.000
S	4.228E-08	3.102E-08	2.039E-08	1.189E-08	8.592E-09	6.631E-09	5.194E-09	4.229E-09	3.584E-09	3.090E-09	2.687E-09
SSW	3.140E-08	2.607E-08	1.708E-08	9.917E-09	7.205E-09	5.453E-09	4.267E-09	3.472E-09	2.907E-09	2.486E-09	2.163E-09
SW	2.108E-08	2.042E-08	1.385E-08	8.396E-09	6.400E-09	5.121E-09	4.259E-09	3.491E-09	2.941E-09	2.530E-09	2.212E-09
WSW	2.585E-08	2.024E-08	1.559E-08	1.040E-08	7.129E-09	5.328E-09	4.207E-09	3.446E-09	2.901E-09	2.494E-09	2.180E-09
W	2.089E-08	1.186E-08	9.010E-09	6.449E-09	5.119E-09	3.846E-09	3.025E-09	2.472E-09	2.077E-09	1.783E-09	1.556E-09
WNW	3.963E-08	2.347E-08	1.661E-08	1.067E-08	7.498E-09	5.701E-09	4.581E-09	3.783E-09	3.185E-09	2.732E-09	2.383E-09
NW	5.421E-08	3.151E-08	2.217E-08	1.399E-08	9.542E-09	7.107E-09	5.727E-09	4.707E-09	3.952E-09	3.389E-09	2.955E-09
NNW	8.781E-08	5.278E-08	3.479E-08	2.042E-08	1.404E-08	1.052E-08	8.427E-09	6.983E-09	5.999E-09	5.185E-09	4.528E-09
N	2.728E-08	1.803E-08	1.601E-08	1.450E-08	1.323E-08	1.137E-08	9.017E-09	7.387E-09	6.206E-09	5.325E-09	4.646E-09
NNE	2.585E-08	4.918E-08	3.234E-08	1.895E-08	1.304E-08	9.776E-09	7.737E-09	6.355E-09	5.363E-09	4.619E-09	4.044E-09
NE	1.191E-08	2.147E-08	1.406E-08	8.183E-09	5.598E-09	4.178E-09	3.338E-09	2.755E-09	2.335E-09	2.004E-09	1.749E-09
ENE	8.077E-09	1.129E-08	7.472E-09	4.393E-09	3.018E-09	2.259E-09	1.874E-09	1.582E-09	1.328E-09	1.138E-09	9.924E-10
E	6.975E-09	1.366E-08	9.267E-09	5.627E-09	3.950E-09	3.003E-09	2.402E-09	1.990E-09	1.789E-09	1.612E-09	1.414E-09
ESE	8.346E-09	1.222E-08	8.345E-09	5.104E-09	3.600E-09	2.745E-09	2.199E-09	1.824E-09	1.551E-09	1.345E-09	1.184E-09
SE	1.419E-08	8.552E-09	6.562E-09	4.940E-09	3.808E-09	3.179E-09	2.780E-09	2.498E-09	2.119E-09	1.832E-09	1.609E-09
SSE	2.658E-08	4.082E-08	2.664E-08	1.543E-08	1.051E-08	7.829E-09	6.161E-09	5.036E-09	4.232E-09	3.632E-09	3.169E-09

CHI/Q (SEC/METER CUBED) FOR EACH SEGMENT

SEGMENT BOUNDARIES IN MILES FROM THE SITE

DIRECTION FROM SITE	.5-1	1-2	2-3	3-4	4-5	5-10	10-20	20-30	30-40	40-50
S	5.091E-08	6.966E-08	5.330E-08	4.141E-08	4.392E-08	2.880E-08	1.231E-08	6.579E-09	4.259E-09	3.087E-09
SSW	2.482E-08	4.277E-08	4.001E-08	4.046E-08	3.404E-08	2.326E-08	1.030E-08	5.446E-09	3.484E-09	2.491E-09
SW	3.370E-08	7.499E-08	5.050E-08	3.151E-08	2.287E-08	1.764E-08	8.720E-09	5.117E-09	3.501E-09	2.534E-09
WSW	4.600E-08	1.030E-07	6.657E-08	4.052E-08	2.876E-08	1.942E-08	1.010E-08	5.360E-09	3.456E-09	2.498E-09
W	1.124E-07	1.151E-07	6.197E-08	3.632E-08	2.459E-08	1.260E-08	6.427E-09	3.857E-09	2.479E-09	1.786E-09
WNW	1.319E-07	1.970E-07	1.114E-07	6.852E-08	4.654E-08	2.401E-08	1.058E-08	5.732E-09	3.783E-09	2.737E-09
NW	1.484E-07	2.843E-07	1.647E-07	9.590E-08	6.393E-08	3.240E-08	1.383E-08	7.204E-09	4.711E-09	3.395E-09
NNW	9.914E-08	1.581E-07	1.628E-07	1.436E-07	1.027E-07	5.257E-08	2.078E-08	1.062E-08	7.021E-09	5.183E-09
N	1.229E-07	7.890E-08	5.507E-08	3.999E-08	3.058E-08	1.919E-08	1.427E-08	1.092E-08	7.403E-09	5.334E-09
NNE	8.768E-08	6.747E-08	4.519E-08	3.168E-08	2.551E-08	3.651E-08	1.929E-08	9.830E-09	6.372E-09	4.626E-09
NE	1.398E-08	2.208E-08	1.863E-08	1.388E-08	1.155E-08	1.605E-08	8.340E-09	4.221E-09	2.762E-09	2.008E-09
ENE	9.389E-09	1.719E-08	1.441E-08	1.042E-08	8.249E-09	8.879E-09	4.466E-09	2.307E-09	1.569E-09	1.140E-09
E	1.010E-08	1.499E-08	1.225E-08	8.870E-09	7.068E-09	1.022E-08	5.690E-09	3.015E-09	2.031E-09	1.591E-09
ESE	1.694E-08	2.029E-08	1.543E-08	1.099E-08	8.617E-09	9.637E-09	5.156E-09	2.754E-09	1.827E-09	1.346E-09
SE	2.578E-08	4.071E-08	3.173E-08	2.219E-08	1.627E-08	8.921E-09	4.797E-09	3.187E-09	2.434E-09	1.834E-09
SSE	3.286E-08	5.643E-08	4.623E-08	3.329E-08	2.662E-08	3.135E-08	1.573E-08	7.878E-09	5.051E-09	3.639E-09

ERP ELEVATED STACK RELEASES - JUL-DEC 2012
2.260 DAY DECAY, UNDEPLETED
CORRECTED USING STANDARD OPEN TERRAIN FACTORS

ANNUAL AVERAGE CHI/Q (SEC/METER CUBED) DISTANCE IN MILES FROM THE SITE

SECTOR	.250	.500	.750	1.000	1.500	2.000	2.500	3.000	3.500	4.000	4.500
S	2.505E-10	1.667E-08	4.932E-08	6.909E-08	7.551E-08	6.521E-08	5.381E-08	4.443E-08	3.715E-08	4.229E-08	4.662E-08
SSW	4.475E-11	4.348E-09	2.187E-08	3.719E-08	4.644E-08	4.256E-08	3.644E-08	4.088E-08	4.276E-08	3.755E-08	3.343E-08
SW	3.167E-11	3.893E-09	2.448E-08	5.537E-08	9.696E-08	6.774E-08	5.002E-08	3.874E-08	3.114E-08	2.578E-08	2.184E-08
WSW	6.555E-11	6.178E-09	3.341E-08	7.513E-08	1.364E-07	9.090E-08	6.559E-08	5.013E-08	3.995E-08	3.287E-08	2.772E-08
W	3.970E-09	4.681E-08	1.175E-07	1.408E-07	1.347E-07	8.650E-08	6.079E-08	4.554E-08	3.572E-08	2.900E-08	2.418E-08
WNW	4.512E-10	2.727E-08	1.157E-07	1.959E-07	2.509E-07	1.557E-07	1.072E-07	8.400E-08	6.887E-08	5.524E-08	4.562E-08
NW	1.039E-08	3.978E-08	1.151E-07	2.273E-07	3.862E-07	2.346E-07	1.596E-07	1.205E-07	9.545E-08	7.626E-08	6.276E-08
NNW	2.604E-08	5.417E-08	9.426E-08	1.250E-07	1.671E-07	1.670E-07	1.636E-07	1.579E-07	1.536E-07	1.224E-07	1.006E-07
N	8.524E-08	1.436E-07	1.344E-07	1.036E-07	7.913E-08	6.604E-08	5.577E-08	4.675E-08	3.988E-08	3.456E-08	3.037E-08
NNE	1.267E-08	7.205E-08	9.888E-08	8.689E-08	6.950E-08	5.586E-08	4.535E-08	3.746E-08	3.152E-08	2.698E-08	2.345E-08
NE	5.082E-11	3.899E-09	1.297E-08	1.973E-08	2.377E-08	2.183E-08	1.883E-08	1.609E-08	1.383E-08	1.202E-08	1.056E-08
ENE	1.446E-11	1.177E-09	7.868E-09	1.460E-08	1.879E-08	1.715E-08	1.456E-08	1.224E-08	1.037E-08	8.886E-09	7.715E-09
E	9.511E-10	4.302E-09	9.199E-09	1.364E-08	1.624E-08	1.462E-08	1.238E-08	1.041E-08	8.831E-09	7.583E-09	6.597E-09
ESE	1.206E-10	7.598E-09	1.745E-08	2.118E-08	2.168E-08	1.870E-08	1.556E-08	1.298E-08	1.095E-08	9.366E-09	8.125E-09
SE	4.873E-10	4.760E-09	2.307E-08	3.828E-08	4.459E-08	3.883E-08	3.207E-08	2.647E-08	2.213E-08	1.878E-08	1.616E-08
SSE	5.546E-11	4.553E-09	2.859E-08	5.012E-08	6.162E-08	5.541E-08	4.677E-08	3.923E-08	3.320E-08	2.845E-08	2.471E-08

ANNUAL AVERAGE CHI/Q (SEC/METER CUBED) DISTANCE IN MILES FROM THE SITE

SECTOR	5.000	7.500	10.000	15.000	20.000	25.000	30.000	35.000	40.000	45.000	50.000
S	4.195E-08	3.063E-08	2.005E-08	1.158E-08	8.296E-09	6.343E-09	4.924E-09	3.973E-09	3.336E-09	2.850E-09	2.457E-09
SSW	3.115E-08	2.574E-08	1.679E-08	9.660E-09	6.951E-09	5.211E-09	4.040E-09	3.257E-09	2.702E-09	2.290E-09	1.974E-09
SW	2.084E-08	2.001E-08	1.347E-08	8.050E-09	6.039E-09	4.754E-09	3.889E-09	3.139E-09	2.604E-09	2.206E-09	1.900E-09
WSW	2.552E-08	1.983E-08	1.516E-08	9.962E-09	6.728E-09	4.956E-09	3.856E-09	3.113E-09	2.584E-09	2.190E-09	1.887E-09
W	2.060E-08	1.161E-08	8.753E-09	6.169E-09	4.818E-09	3.564E-09	2.762E-09	2.223E-09	1.840E-09	1.556E-09	1.338E-09
WNW	3.919E-08	2.308E-08	1.624E-08	1.031E-08	7.161E-09	5.382E-09	4.274E-09	3.489E-09	2.904E-09	2.463E-09	2.124E-09
NW	5.372E-08	3.108E-08	2.176E-08	1.360E-08	9.185E-09	6.777E-09	5.408E-09	4.402E-09	3.661E-09	3.110E-09	2.687E-09
NNW	8.718E-08	5.220E-08	3.429E-08	1.997E-08	1.363E-08	1.014E-08	8.061E-09	6.629E-09	5.652E-09	4.847E-09	4.202E-09
N	2.711E-08	1.786E-08	1.580E-08	1.419E-08	1.284E-08	1.094E-08	8.613E-09	7.002E-09	5.838E-09	4.972E-09	4.305E-09
NNE	2.562E-08	4.834E-08	3.160E-08	1.829E-08	1.244E-08	9.216E-09	7.208E-09	5.851E-09	4.879E-09	4.154E-09	3.594E-09
NE	1.178E-08	2.113E-08	1.376E-08	7.929E-09	5.368E-09	3.966E-09	3.136E-09	2.563E-09	2.150E-09	1.827E-09	1.579E-09
ENE	7.981E-09	1.110E-08	7.306E-09	4.249E-09	2.888E-09	2.139E-09	1.757E-09	1.468E-09	1.220E-09	1.035E-09	8.933E-10
E	6.905E-09	1.344E-08	9.064E-09	5.441E-09	3.776E-09	2.839E-09	2.245E-09	1.839E-09	1.633E-09	1.454E-09	1.261E-09
ESE	8.271E-09	1.205E-08	8.193E-09	4.966E-09	3.471E-09	2.623E-09	2.083E-09	1.712E-09	1.443E-09	1.240E-09	1.082E-09
SE	1.410E-08	8.466E-09	6.473E-09	4.835E-09	3.697E-09	3.058E-09	2.650E-09	2.358E-09	1.983E-09	1.700E-09	1.480E-09
SSE	2.639E-08	4.026E-08	2.615E-08	1.500E-08	1.013E-08	7.470E-09	5.823E-09	4.714E-09	3.924E-09	3.336E-09	2.884E-09

CHI/Q (SEC/METER CUBED) FOR EACH SEGMENT

SEGMENT BOUNDARIES IN MILES FROM THE SITE

DIRECTION FROM SITE	.5-1	1-2	2-3	3-4	4-5	5-10	10-20	20-30	30-40	40-50
S	5.085E-08	6.951E-08	5.310E-08	4.119E-08	4.361E-08	2.844E-08	1.200E-08	6.296E-09	4.002E-09	2.849E-09
SSW	2.479E-08	4.266E-08	3.985E-08	4.024E-08	3.381E-08	2.296E-08	1.004E-08	5.207E-09	3.270E-09	2.295E-09
SW	3.363E-08	7.473E-08	5.023E-08	3.127E-08	2.264E-08	1.729E-08	8.361E-09	4.750E-09	3.150E-09	2.211E-09
WSW	4.590E-08	1.026E-07	6.616E-08	4.016E-08	2.843E-08	1.902E-08	9.678E-09	4.989E-09	3.124E-09	2.194E-09
W	1.121E-07	1.146E-07	6.155E-08	3.597E-08	2.428E-08	1.234E-08	6.143E-09	3.578E-09	2.231E-09	1.559E-09
WNW	1.317E-07	1.964E-07	1.108E-07	6.800E-08	4.609E-08	2.362E-08	1.023E-08	5.413E-09	3.491E-09	2.468E-09
NW	1.482E-07	2.835E-07	1.640E-07	9.530E-08	6.341E-08	3.197E-08	1.345E-08	6.871E-09	4.407E-09	3.117E-09
NNW	9.903E-08	1.577E-07	1.622E-07	1.429E-07	1.021E-07	5.201E-08	2.034E-08	1.024E-08	6.666E-09	4.847E-09
N	1.228E-07	7.875E-08	5.490E-08	3.981E-08	3.040E-08	1.900E-08	1.395E-08	1.052E-08	7.019E-09	4.981E-09
NNE	8.759E-08	6.730E-08	4.500E-08	3.149E-08	2.530E-08	3.585E-08	1.865E-08	9.272E-09	5.869E-09	4.162E-09
NE	1.396E-08	2.201E-08	1.853E-08	1.378E-08	1.144E-08	1.578E-08	8.087E-09	4.008E-09	2.570E-09	1.831E-09
ENE	9.373E-09	1.713E-08	1.432E-08	1.034E-08	8.160E-09	8.721E-09	4.324E-09	2.186E-09	1.456E-09	1.037E-09
E	1.008E-08	1.494E-08	1.219E-08	8.807E-09	7.003E-09	1.004E-08	5.506E-09	2.851E-09	1.876E-09	1.436E-09
ESE	1.692E-08	2.024E-08	1.536E-08	1.092E-08	8.547E-09	9.497E-09	5.019E-09	2.633E-09	1.715E-09	1.241E-09
SE	2.576E-08	4.063E-08	3.164E-08	2.209E-08	1.617E-08	8.833E-09	4.693E-09	3.065E-09	2.299E-09	1.702E-09
SSE	3.282E-08	5.630E-08	4.606E-08	3.312E-08	2.644E-08	3.091E-08	1.531E-08	7.520E-09	4.730E-09	3.343E-09

ERP ELEVATED STACK RELEASES - JUL-DEC 2012
8.000 DAY DECAY, DEPLETED
CORRECTED USING STANDARD OPEN TERRAIN FACTORS

ANNUAL AVERAGE CHI/Q (SEC/METER CUBED) DISTANCE IN MILES FROM THE SITE

SECTOR	.250	.500	.750	1.000	1.500	2.000	2.500	3.000	3.500	4.000	4.500
S	2.505E-10	1.654E-08	4.884E-08	6.863E-08	7.465E-08	6.402E-08	5.246E-08	4.304E-08	3.578E-08	4.070E-08	4.496E-08
SSW	4.476E-11	4.320E-09	2.177E-08	3.711E-08	4.606E-08	4.193E-08	3.568E-08	3.991E-08	4.169E-08	3.651E-08	3.244E-08
SW	3.169E-11	3.865E-09	2.434E-08	5.527E-08	9.619E-08	6.679E-08	4.910E-08	3.790E-08	3.040E-08	2.511E-08	2.125E-08
WSW	6.557E-11	6.130E-09	3.317E-08	7.491E-08	1.353E-07	8.959E-08	6.439E-08	4.907E-08	3.903E-08	3.206E-08	2.701E-08
W	3.972E-09	4.614E-08	1.162E-07	1.391E-07	1.325E-07	8.464E-08	5.926E-08	4.427E-08	3.466E-08	2.809E-08	2.340E-08
WNW	4.514E-10	2.709E-08	1.150E-07	1.943E-07	2.476E-07	1.526E-07	1.046E-07	8.182E-08	6.700E-08	5.357E-08	4.406E-08
NW	1.039E-08	3.945E-08	1.139E-07	2.257E-07	3.819E-07	2.304E-07	1.560E-07	1.175E-07	9.288E-08	7.394E-08	6.060E-08
NNW	2.604E-08	5.372E-08	9.287E-08	1.237E-07	1.653E-07	1.646E-07	1.612E-07	1.557E-07	1.517E-07	1.206E-07	9.868E-08
N	8.525E-08	1.424E-07	1.316E-07	1.013E-07	7.733E-08	6.446E-08	5.433E-08	4.544E-08	3.868E-08	3.347E-08	2.936E-08
NNE	1.267E-08	7.144E-08	9.694E-08	8.502E-08	6.791E-08	5.442E-08	4.401E-08	3.622E-08	3.037E-08	2.592E-08	2.247E-08
NE	5.083E-11	3.870E-09	1.286E-08	1.963E-08	2.355E-08	2.150E-08	1.844E-08	1.568E-08	1.343E-08	1.163E-08	1.019E-08
ENE	1.446E-11	1.170E-09	7.848E-09	1.459E-08	1.865E-08	1.689E-08	1.424E-08	1.189E-08	1.002E-08	8.541E-09	7.382E-09
E	9.513E-10	4.268E-09	9.121E-09	1.358E-08	1.609E-08	1.439E-08	1.211E-08	1.012E-08	8.539E-09	7.298E-09	6.324E-09
ESE	1.206E-10	7.536E-09	1.722E-08	2.095E-08	2.138E-08	1.834E-08	1.518E-08	1.259E-08	1.057E-08	9.005E-09	7.783E-09
SE	4.873E-10	4.730E-09	2.299E-08	3.822E-08	4.419E-08	3.818E-08	3.129E-08	2.565E-08	2.130E-08	1.797E-08	1.539E-08
SSE	5.546E-11	4.527E-09	2.850E-08	5.007E-08	6.112E-08	5.455E-08	4.574E-08	3.813E-08	3.210E-08	2.738E-08	2.368E-08

ANNUAL AVERAGE CHI/Q (SEC/METER CUBED) DISTANCE IN MILES FROM THE SITE

SECTOR	5.000	7.500	10.000	15.000	20.000	25.000	30.000	35.000	40.000	45.000	50.000
S	4.039E-08	2.919E-08	1.858E-08	1.014E-08	6.809E-09	4.941E-09	3.697E-09	2.888E-09	2.363E-09	1.976E-09	1.671E-09
SSW	3.021E-08	2.475E-08	1.568E-08	8.496E-09	5.750E-09	4.176E-09	3.151E-09	2.481E-09	2.015E-09	1.675E-09	1.419E-09
SW	2.031E-08	1.953E-08	1.279E-08	7.212E-09	5.050E-09	3.762E-09	2.998E-09	2.370E-09	1.931E-09	1.610E-09	1.366E-09
WSW	2.490E-08	1.917E-08	1.430E-08	9.013E-09	5.893E-09	4.231E-09	3.222E-09	2.554E-09	2.086E-09	1.744E-09	1.484E-09
W	1.991E-08	1.120E-08	8.430E-09	5.691E-09	4.235E-09	3.056E-09	2.318E-09	1.834E-09	1.495E-09	1.247E-09	1.060E-09
WNW	3.771E-08	2.168E-08	1.485E-08	8.891E-09	5.748E-09	4.096E-09	3.156E-09	2.514E-09	2.048E-09	1.703E-09	1.443E-09
NW	5.166E-08	2.915E-08	1.985E-08	1.173E-08	7.537E-09	5.336E-09	4.133E-09	3.284E-09	2.673E-09	2.227E-09	1.890E-09
NNW	8.519E-08	4.966E-08	3.159E-08	1.720E-08	1.085E-08	7.553E-09	5.686E-09	4.500E-09	3.734E-09	3.127E-09	2.652E-09
N	2.618E-08	1.718E-08	1.528E-08	1.390E-08	1.239E-08	1.012E-08	7.782E-09	6.199E-09	5.077E-09	4.254E-09	3.630E-09
NNE	2.464E-08	4.739E-08	3.008E-08	1.653E-08	1.068E-08	7.590E-09	5.730E-09	4.511E-09	3.661E-09	3.042E-09	2.574E-09
NE	1.140E-08	2.069E-08	1.309E-08	7.145E-09	4.588E-09	3.248E-09	2.488E-09	1.986E-09	1.633E-09	1.363E-09	1.159E-09
ENE	7.634E-09	1.077E-08	6.895E-09	3.788E-09	2.410E-09	1.689E-09	1.322E-09	1.066E-09	8.643E-10	7.179E-10	6.075E-10
E	6.622E-09	1.318E-08	8.645E-09	4.887E-09	3.158E-09	2.238E-09	1.683E-09	1.318E-09	1.125E-09	9.679E-10	8.178E-10
ESE	7.925E-09	1.176E-08	7.774E-09	4.442E-09	2.893E-09	2.062E-09	1.556E-09	1.223E-09	9.903E-10	8.201E-10	6.915E-10
SE	1.336E-08	7.888E-09	5.994E-09	4.496E-09	3.455E-09	2.884E-09	2.525E-09	2.266E-09	1.882E-09	1.597E-09	1.377E-09
SSE	2.530E-08	3.909E-08	2.463E-08	1.341E-08	8.608E-09	6.091E-09	4.583E-09	3.598E-09	2.914E-09	2.417E-09	2.042E-09

CHI/Q (SEC/METER CUBED) FOR EACH SEGMENT
SEGMENT BOUNDARIES IN MILES FROM THE SITE

DIRECTION FROM SITE	.5-1	1-2	2-3	3-4	4-5	5-10	10-20	20-30	30-40	40-50
S	5.046E-08	6.859E-08	5.178E-08	3.973E-08	4.201E-08	2.696E-08	1.054E-08	4.941E-09	2.919E-09	1.978E-09
SSW	2.471E-08	4.223E-08	3.904E-08	3.921E-08	3.282E-08	2.193E-08	8.871E-09	4.186E-09	2.495E-09	1.681E-09
SW	3.354E-08	7.403E-08	4.934E-08	3.053E-08	2.205E-08	1.671E-08	7.492E-09	3.800E-09	2.382E-09	1.615E-09
WSW	4.571E-08	1.016E-07	6.498E-08	3.924E-08	2.772E-08	1.828E-08	8.801E-09	4.271E-09	2.567E-09	1.749E-09
W	1.108E-07	1.127E-07	6.003E-08	3.490E-08	2.350E-08	1.190E-08	5.653E-09	3.075E-09	1.843E-09	1.251E-09
WNW	1.307E-07	1.936E-07	1.083E-07	6.612E-08	4.452E-08	2.221E-08	8.818E-09	4.161E-09	2.520E-09	1.709E-09
NW	1.470E-07	2.799E-07	1.604E-07	9.269E-08	6.124E-08	3.002E-08	1.167E-08	5.442E-09	3.294E-09	2.234E-09
NNW	9.789E-08	1.558E-07	1.599E-07	1.410E-07	1.002E-07	4.953E-08	1.758E-08	7.684E-09	4.547E-09	3.131E-09
N	1.205E-07	7.693E-08	5.347E-08	3.863E-08	2.940E-08	1.834E-08	1.354E-08	9.788E-09	6.224E-09	4.267E-09
NNE	8.598E-08	6.572E-08	4.367E-08	3.035E-08	2.430E-08	3.464E-08	1.694E-08	7.670E-09	4.536E-09	3.052E-09
NE	1.387E-08	2.176E-08	1.815E-08	1.339E-08	1.107E-08	1.525E-08	7.329E-09	3.301E-09	1.995E-09	1.368E-09
ENE	9.361E-09	1.697E-08	1.401E-08	9.990E-09	7.818E-09	8.349E-09	3.866E-09	1.734E-09	1.062E-09	7.204E-10
E	1.002E-08	1.478E-08	1.192E-08	8.518E-09	6.723E-09	9.708E-09	4.954E-09	2.261E-09	1.349E-09	9.588E-10
ESE	1.672E-08	1.993E-08	1.498E-08	1.055E-08	8.198E-09	9.136E-09	4.494E-09	2.081E-09	1.230E-09	8.229E-10
SE	2.570E-08	4.019E-08	3.087E-08	2.127E-08	1.540E-08	8.263E-09	4.366E-09	2.893E-09	2.194E-09	1.600E-09
SSE	3.276E-08	5.574E-08	4.505E-08	3.202E-08	2.537E-08	2.960E-08	1.377E-08	6.159E-09	3.619E-09	2.426E-09

ERP ELEVATED STACK RELEASES - JUL-DEC 2012
CORRECTED USING STANDARD OPEN TERRAIN FACTORS

********** RELATIVE DEPOSITION PER UNIT AREA (M**-2) AT FIXED POINTS BY DOWNWIND SECTORS **********

DIRECTION FROM SITE	DISTANCES IN MILES .25	.50	.75	1.00	1.50	2.00	2.50	3.00	3.50	4.00	4.50
S	2.314E-09	2.467E-09	2.961E-09	2.542E-09	1.445E-09	9.399E-10	6.545E-10	4.774E-10	3.603E-10	2.896E-10	2.674E-10
SSW	4.724E-10	8.194E-10	1.340E-09	1.296E-09	7.841E-10	5.207E-10	3.661E-10	2.683E-10	2.552E-10	1.929E-10	1.510E-10
SW	2.896E-10	3.942E-10	5.700E-10	5.286E-10	5.879E-10	3.211E-10	1.994E-10	1.356E-10	9.810E-11	7.422E-11	5.810E-11
WSW	5.424E-10	5.683E-10	6.712E-10	9.267E-10	6.035E-10	3.268E-10	2.018E-10	1.367E-10	9.870E-11	7.459E-11	5.836E-11
W	9.185E-10	2.279E-09	1.827E-09	1.205E-09	5.480E-10	2.948E-10	1.815E-10	1.227E-10	8.848E-11	6.681E-11	5.225E-11
WNW	1.327E-09	1.244E-09	2.573E-09	2.178E-09	1.225E-09	6.303E-10	3.811E-10	2.614E-10	2.050E-10	1.624E-10	1.362E-10
NW	3.896E-09	3.229E-09	2.832E-09	3.769E-09	2.260E-09	1.129E-09	6.733E-10	4.536E-10	3.353E-10	2.665E-10	2.243E-10
NNW	4.929E-09	4.055E-09	3.513E-09	2.465E-09	2.062E-09	1.108E-09	6.837E-10	5.775E-10	4.387E-10	3.603E-10	3.138E-10
N	1.320E-08	1.003E-08	7.480E-09	4.565E-09	1.985E-09	1.156E-09	7.597E-10	5.374E-10	3.992E-10	3.074E-10	2.434E-10
NNE	7.201E-09	5.598E-09	4.374E-09	2.800E-09	1.278E-09	7.617E-10	5.071E-10	3.612E-10	2.694E-10	2.078E-10	1.645E-10
NE	4.193E-10	5.009E-10	6.624E-10	5.934E-10	3.454E-10	2.265E-10	1.583E-10	1.157E-10	8.742E-11	6.778E-11	5.367E-11
ENE	1.599E-10	2.875E-10	4.775E-10	4.637E-10	2.812E-10	1.869E-10	1.314E-10	9.636E-11	7.290E-11	5.656E-11	4.479E-11
E	2.810E-10	3.431E-10	4.611E-10	4.158E-10	2.429E-10	1.595E-10	1.115E-10	8.154E-11	6.161E-11	4.777E-11	3.783E-11
ESE	1.065E-09	1.019E-09	1.091E-09	8.830E-10	4.843E-10	3.111E-10	2.153E-10	1.566E-10	1.180E-10	9.139E-11	7.237E-11
SE	7.652E-10	1.233E-09	1.952E-09	1.868E-09	1.124E-09	7.455E-10	5.238E-10	3.838E-10	2.903E-10	2.252E-10	1.783E-10
SSE	6.479E-10	1.201E-09	2.019E-09	1.968E-09	1.195E-09	7.947E-10	5.591E-10	4.099E-10	3.102E-10	2.406E-10	1.906E-10

DIRECTION FROM SITE	DISTANCES IN MILES 5.00	7.50	10.00	15.00	20.00	25.00	30.00	35.00	40.00	45.00	50.00
S	2.150E-10	1.517E-10	1.035E-10	5.996E-11	3.791E-11	2.726E-11	1.948E-11	1.459E-11	1.149E-11	9.171E-12	7.486E-12
SSW	1.218E-10	1.125E-10	8.137E-11	4.937E-11	2.924E-11	2.026E-11	1.452E-11	1.090E-11	8.513E-12	6.800E-12	5.550E-12
SW	4.718E-11	5.559E-11	4.185E-11	2.617E-11	1.680E-11	1.031E-11	7.135E-12	5.357E-12	4.166E-12	3.327E-12	2.716E-12
WSW	4.779E-11	4.968E-11	3.684E-11	2.193E-11	1.327E-11	8.899E-12	6.474E-12	4.862E-12	3.780E-12	3.020E-12	2.465E-12
W	4.202E-11	1.889E-11	2.884E-11	1.890E-11	1.104E-11	7.561E-12	5.418E-12	4.068E-12	3.163E-12	2.527E-12	2.062E-12
WNW	1.203E-10	7.716E-11	5.663E-11	3.482E-11	2.145E-11	1.405E-11	9.880E-12	7.420E-12	5.817E-12	4.647E-12	3.793E-12
NW	1.979E-10	1.276E-10	9.393E-11	5.587E-11	3.406E-11	2.282E-11	1.660E-11	1.246E-11	9.727E-12	7.770E-12	6.342E-12
NNW	2.860E-10	2.015E-10	1.537E-10	9.733E-11	6.288E-11	4.181E-11	2.689E-11	1.913E-11	1.489E-11	1.189E-11	9.706E-12
N	1.969E-10	9.439E-11	5.832E-11	3.170E-11	9.488E-11	5.319E-11	3.809E-11	2.860E-11	2.224E-11	1.776E-11	1.450E-11
NNE	1.330E-10	2.130E-10	1.321E-10	6.870E-11	4.194E-11	2.806E-11	2.003E-11	1.498E-11	1.161E-11	9.250E-12	7.532E-12
NE	4.325E-11	8.055E-11	5.108E-11	2.722E-11	1.674E-11	1.118E-11	7.818E-12	5.809E-12	4.517E-12	3.628E-12	2.961E-12
ENE	3.608E-11	3.827E-11	2.737E-11	1.645E-11	1.046E-11	6.942E-12	4.889E-12	3.485E-12	2.712E-12	2.169E-12	1.773E-12
E	3.048E-11	4.282E-11	3.216E-11	2.008E-11	1.289E-11	8.535E-12	5.985E-12	4.379E-12	3.331E-12	2.469E-12	2.010E-12
ESE	5.835E-11	6.119E-11	4.383E-11	2.643E-11	1.688E-11	1.124E-11	7.945E-12	5.866E-12	4.497E-12	3.555E-12	2.877E-12
SE	1.437E-10	6.808E-11	4.153E-11	2.187E-11	1.334E-11	9.162E-12	6.829E-12	1.131E-11	8.735E-12	6.954E-12	5.677E-12
SSE	1.535E-10	2.162E-10	1.337E-10	6.931E-11	4.227E-11	2.829E-11	2.021E-11	1.512E-11	1.172E-11	9.343E-12	7.611E-12

********** RELATIVE DEPOSITION PER UNIT AREA (M**-2) BY DOWNWIND SECTORS **********

DIRECTION FROM SITE	SEGMENT BOUNDARIES IN MILES .5-1	1-2	2-3	3-4	4-5	5-10	10-20	20-30	30-40	40-50
S	2.665E-09	1.464E-09	6.597E-10	3.668E-10	2.546E-10	1.444E-10	5.984E-11	2.699E-11	1.481E-11	9.234E-12
SSW	1.205E-09	7.807E-10	3.682E-10	2.352E-10	1.526E-10	1.007E-10	4.753E-11	2.036E-11	1.102E-11	6.845E-12
SW	5.125E-10	4.562E-10	2.064E-10	9.972E-11	5.883E-11	4.761E-11	2.549E-11	1.077E-11	5.411E-12	3.349E-12
WSW	7.619E-10	5.524E-10	2.091E-10	1.004E-10	5.926E-11	4.356E-11	2.140E-11	9.095E-12	4.910E-12	3.039E-12
W	1.651E-09	5.814E-10	1.882E-10	9.001E-11	5.278E-11	2.845E-11	1.762E-11	7.631E-12	4.109E-12	2.543E-12
WNW	2.102E-09	1.172E-09	3.997E-10	2.049E-10	1.381E-10	7.762E-11	3.372E-11	1.436E-11	7.512E-12	4.677E-12
NW	3.337E-09	2.092E-09	7.069E-10	3.429E-10	2.270E-10	1.283E-10	5.463E-11	2.333E-11	1.260E-11	7.821E-12
NNW	3.168E-09	1.727E-09	7.544E-10	4.485E-10	3.173E-10	1.990E-10	9.456E-11	4.146E-11	1.973E-11	1.197E-11
N	6.751E-09	2.190E-09	7.765E-10	4.037E-10	2.451E-10	1.011E-10	6.570E-11	5.827E-11	2.889E-11	1.788E-11
NNE	3.946E-09	1.387E-09	5.166E-10	2.721E-10	1.656E-10	1.593E-10	7.090E-11	2.855E-11	1.514E-11	9.313E-12
NE	5.959E-10	3.477E-10	1.595E-10	8.802E-11	5.399E-11	5.917E-11	2.787E-11	1.132E-11	5.891E-12	3.644E-12
ENE	4.292E-10	2.798E-10	1.322E-10	7.338E-11	4.505E-11	3.294E-11	1.621E-11	7.059E-12	3.592E-12	2.183E-12
E	4.148E-10	2.443E-10	1.123E-10	6.203E-11	3.805E-11	3.534E-11	1.957E-11	8.676E-12	4.439E-12	2.555E-12
ESE	9.826E-10	4.959E-10	2.174E-10	1.189E-10	7.281E-11	5.284E-11	2.605E-11	1.143E-11	5.938E-12	3.583E-12
SE	1.755E-09	1.121E-09	5.269E-10	2.922E-10	1.794E-10	7.308E-11	2.244E-11	9.342E-12	9.049E-12	7.009E-12
SSE	1.814E-09	1.189E-09	5.623E-10	3.122E-10	1.917E-10	1.656E-10	7.161E-11	2.879E-11	1.528E-11	9.407E-12

ERP ELEVATED STACK RELEASES - JUL-DEC 2012
CORRECTED USING STANDARD OPEN TERRAIN FACTORS
SPECIFIC POINTS OF INTEREST

RELEASE ID	TYPE OF LOCATION	DIRECTION FROM SITE	DIST. (MI)	X/Q (SEC/M3) NO DECAY UNDEPLETED	X/Q (SEC/M3) 2.26 DAY DECAY UNDEPLETED	X/Q (SEC/M3) 8.0 DAY DECAY DEPLETED	D/Q (PER SQ.METER)
A	Site Boundary	S	.80	5.5E-08	5.4E-08	5.4E-08	2.9E-09
A	Site Boundary	SSW	.82	2.7E-08	2.7E-08	2.7E-08	1.4E-09
A	Site Boundary	SW	.97	5.2E-08	5.2E-08	5.2E-08	5.4E-10
A	Site Boundary	WSW	.93	6.3E-08	6.3E-08	6.2E-08	8.3E-10
A	Site Boundary	W	.91	1.4E-07	1.4E-07	1.3E-07	1.3E-09
A	Site Boundary	WNW	.94	1.8E-07	1.8E-07	1.8E-07	2.4E-09
A	Site Boundary	NW	.81	1.4E-07	1.4E-07	1.4E-07	2.6E-09
A	Site Boundary	NNW	.69	8.1E-08	8.1E-08	8.0E-08	3.6E-09
A	Site Boundary	N	.67	1.4E-07	1.4E-07	1.3E-07	8.1E-09
A	Site Boundary	NNE	.60	8.6E-08	8.6E-08	8.5E-08	5.0E-09
A	Site Boundary	NE	.62	7.6E-09	7.6E-09	7.6E-09	5.7E-10
A	Site Boundary	ENE	.59	2.6E-09	2.6E-09	2.6E-09	3.5E-10
A	Site Boundary	E	.53	4.5E-09	4.5E-09	4.5E-09	3.5E-10
A	Site Boundary	ESE	.54	9.0E-09	9.0E-09	8.9E-09	1.0E-09
A	Site Boundary	SE	.65	1.4E-08	1.4E-08	1.4E-08	1.7E-09
A	Site Boundary	SSE	.81	3.5E-08	3.5E-08	3.5E-08	2.1E-09
A	Nearest Res	SSW	3.00	4.1E-08	4.1E-08	4.0E-08	2.7E-10
A	Nearest Res	SW	1.30	8.5E-08	8.5E-08	8.5E-08	7.8E-10
A	Nearest Res	WSW	1.90	9.8E-08	9.8E-08	9.7E-08	3.7E-10
A	Nearest Res	W	2.90	4.8E-08	4.8E-08	4.7E-08	1.3E-10
A	Nearest Res	WNW	1.70	2.0E-07	2.0E-07	2.0E-07	9.2E-10
A	Nearest Res	NW	.90	1.8E-07	1.8E-07	1.8E-07	3.9E-09
A	Nearest Res	NNW	1.90	1.7E-07	1.7E-07	1.7E-07	1.2E-09
A	Nearest Res	N	3.00	4.7E-08	4.7E-08	4.5E-08	5.4E-10
A	Nearest Res	NNE	1.90	5.9E-08	5.8E-08	5.7E-08	8.4E-10
A	Nearest Res	NE	3.00	1.6E-08	1.6E-08	1.6E-08	1.2E-10
A	Nearest Res	ENE	1.70	1.8E-08	1.8E-08	1.8E-08	2.4E-10
A	Nearest Res	E	2.20	1.4E-08	1.4E-08	1.3E-08	1.4E-10
A	Nearest Res	ESE	2.30	1.7E-08	1.7E-08	1.6E-08	2.5E-10
A	Nearest Res	SE	3.00	2.7E-08	2.6E-08	2.6E-08	3.8E-10
A	Nearest Cow	NNW	3.50	1.5E-07	1.5E-07	1.5E-07	4.4E-10
A	Nearest Garde	SSW	3.00	4.1E-08	4.1E-08	4.0E-08	2.7E-10
A	Nearest Garde	SW	1.30	8.5E-08	8.5E-08	8.5E-08	7.8E-10
A	Nearest Garde	WSW	1.90	9.8E-08	9.8E-08	9.7E-08	3.7E-10
A	Nearest Garde	W	2.90	4.8E-08	4.8E-08	4.7E-08	1.3E-10
A	Nearest Garde	WNW	2.40	1.2E-07	1.1E-07	1.1E-07	4.2E-10
A	Nearest Garde	NW	2.90	1.3E-07	1.3E-07	1.2E-07	4.9E-10
A	Nearest Garde	NNW	2.80	1.6E-07	1.6E-07	1.6E-07	6.4E-10
A	Nearest Garde	ENE	1.70	1.8E-08	1.8E-08	1.8E-08	2.4E-10
A	Nearest Garde	E	2.20	1.4E-08	1.4E-08	1.3E-08	1.4E-10
A	Nearest Garde	ESE	2.30	1.7E-08	1.7E-08	1.6E-08	2.5E-10
A	MAXIMUM CHI/Q	S	1.50	7.6E-08	7.6E-08	7.5E-08	1.4E-09
A	MAXIMUM CHI/Q	SSW	1.50	4.7E-08	4.6E-08	4.6E-08	7.8E-10
A	MAXIMUM CHI/Q	SW	1.50	9.7E-08	9.7E-08	9.6E-08	5.9E-10
A	MAXIMUM CHI/Q	WSW	1.50	1.4E-07	1.4E-07	1.4E-07	6.0E-10
A	MAXIMUM CHI/Q	W	1.00	1.4E-07	1.4E-07	1.4E-07	1.2E-09
A	MAXIMUM CHI/Q	WNW	1.50	2.5E-07	2.5E-07	2.5E-07	1.2E-09
A	MAXIMUM CHI/Q	NW	1.50	3.9E-07	3.9E-07	3.8E-07	2.3E-09
A	MAXIMUM CHI/Q	NNW	1.50	1.7E-07	1.7E-07	1.7E-07	2.1E-09
A	MAXIMUM CHI/Q	N	.50	1.4E-07	1.4E-07	1.4E-07	1.0E-08
A	MAXIMUM CHI/Q	NNE	.75	9.9E-08	9.9E-08	9.7E-08	4.4E-09
A	MAXIMUM CHI/Q	NE	1.50	2.4E-08	2.4E-08	2.4E-08	3.5E-10
A	MAXIMUM CHI/Q	ENE	1.50	1.9E-08	1.9E-08	1.9E-08	2.8E-10
A	MAXIMUM CHI/Q	E	1.50	1.6E-08	1.6E-08	1.6E-08	2.4E-10
A	MAXIMUM CHI/Q	ESE	1.50	2.2E-08	2.2E-08	2.1E-08	4.8E-10
A	MAXIMUM CHI/Q	SE	1.50	4.5E-08	4.5E-08	4.4E-08	1.1E-09
A	MAXIMUM CHI/Q	SSE	1.50	6.2E-08	6.2E-08	6.1E-08	1.2E-09

Atmospheric Diffusion Estimates

Elevated Releases

January-December 2012

ERP ELEVATED STACK RELEASES - JAN-DEC 2012
NO DECAY, UNDEPLETED
CORRECTED USING STANDARD OPEN TERRAIN FACTORS

ANNUAL AVERAGE CHI/Q (SEC/METER CUBED) DISTANCE IN MILES FROM THE SITE

SECTOR	.250	.500	.750	1.000	1.500	2.000	2.500	3.000	3.500	4.000	4.500
S	2.042E-10	1.394E-08	4.395E-08	6.320E-08	7.010E-08	6.087E-08	5.040E-08	4.170E-08	3.493E-08	3.976E-08	4.353E-08
SSW	4.750E-11	4.520E-09	1.937E-08	3.170E-08	3.943E-08	3.647E-08	3.150E-08	3.595E-08	3.806E-08	3.356E-08	2.994E-08
SW	2.389E-11	3.082E-09	2.355E-08	5.415E-08	9.105E-08	6.278E-08	4.598E-08	3.538E-08	2.830E-08	2.332E-08	1.969E-08
WSW	5.607E-11	4.846E-09	3.178E-08	7.276E-08	1.241E-07	8.117E-08	5.789E-08	4.388E-08	3.477E-08	2.847E-08	2.392E-08
W	2.267E-09	4.799E-08	1.430E-07	1.669E-07	1.459E-07	9.066E-08	6.229E-08	4.588E-08	3.552E-08	2.853E-08	2.358E-08
WNW	3.193E-10	2.108E-08	1.063E-07	1.798E-07	2.236E-07	1.379E-07	9.457E-08	7.358E-08	5.987E-08	4.790E-08	3.948E-08
NW	1.420E-08	4.785E-08	1.240E-07	2.295E-07	3.736E-07	2.237E-07	1.506E-07	1.123E-07	8.802E-08	6.995E-08	5.732E-08
NNW	3.041E-08	6.679E-08	1.002E-07	1.223E-07	1.539E-07	1.501E-07	1.438E-07	1.351E-07	1.279E-07	1.017E-07	8.334E-08
N	1.023E-07	1.454E-07	1.378E-07	1.082E-07	8.256E-08	6.785E-08	5.647E-08	4.680E-08	3.954E-08	3.398E-08	2.963E-08
NNE	1.386E-08	5.777E-08	7.851E-08	7.096E-08	5.885E-08	4.804E-08	3.934E-08	3.271E-08	2.767E-08	2.379E-08	2.077E-08
NE	6.313E-10	8.245E-09	1.983E-08	2.678E-08	3.027E-08	2.729E-08	2.334E-08	1.984E-08	1.700E-08	1.473E-08	1.292E-08
ENE	4.000E-09	8.905E-09	1.522E-08	1.924E-08	2.104E-08	1.856E-08	1.560E-08	1.307E-08	1.107E-08	9.505E-09	8.271E-09
E	4.940E-10	3.345E-09	9.129E-09	1.391E-08	1.688E-08	1.554E-08	1.343E-08	1.149E-08	9.895E-09	8.607E-09	7.572E-09
ESE	9.828E-11	6.105E-09	1.692E-08	2.309E-08	2.543E-08	2.238E-08	1.879E-08	1.574E-08	1.333E-08	1.144E-08	9.956E-09
SE	2.668E-10	4.403E-09	2.513E-08	4.263E-08	5.069E-08	4.483E-08	3.746E-08	3.120E-08	2.626E-08	2.240E-08	1.937E-08
SSE	1.602E-10	1.026E-08	3.704E-08	5.594E-08	6.348E-08	5.549E-08	4.611E-08	3.827E-08	3.213E-08	2.736E-08	2.364E-08

ANNUAL AVERAGE CHI/Q (SEC/METER CUBED) DISTANCE IN MILES FROM THE SITE

SECTOR	5.000	7.500	10.000	15.000	20.000	25.000	30.000	35.000	40.000	45.000	50.000
S	3.907E-08	2.825E-08	1.854E-08	1.078E-08	7.764E-09	5.979E-09	4.679E-09	3.807E-09	3.223E-09	2.777E-09	2.414E-09
SSW	2.788E-08	2.221E-08	1.450E-08	8.375E-09	6.014E-09	4.530E-09	3.538E-09	2.874E-09	2.404E-09	2.053E-09	1.784E-09
SW	1.851E-08	1.607E-08	1.076E-08	6.422E-09	4.767E-09	3.747E-09	3.074E-09	2.511E-09	2.109E-09	1.810E-09	1.579E-09
WSW	2.184E-08	1.649E-08	1.252E-08	8.247E-09	5.635E-09	4.203E-09	3.312E-09	2.709E-09	2.278E-09	1.957E-09	1.708E-09
W	1.993E-08	1.096E-08	7.986E-09	5.411E-09	4.146E-09	3.091E-09	2.419E-09	1.969E-09	1.648E-09	1.410E-09	1.227E-09
WNW	3.381E-08	1.967E-08	1.375E-08	8.695E-09	6.066E-09	4.589E-09	3.671E-09	3.023E-09	2.541E-09	2.177E-09	1.896E-09
NW	4.877E-08	2.759E-08	1.904E-08	1.173E-08	7.959E-09	5.904E-09	4.719E-09	3.863E-09	3.236E-09	2.770E-09	2.411E-09
NNW	7.189E-08	4.239E-08	2.783E-08	1.625E-08	1.114E-08	8.323E-09	6.642E-09	5.488E-09	4.701E-09	4.058E-09	3.540E-09
N	2.627E-08	1.687E-08	1.436E-08	1.215E-08	1.064E-08	8.955E-09	7.081E-09	5.788E-09	4.854E-09	4.159E-09	3.624E-09
NNE	2.301E-08	4.165E-08	2.731E-08	1.593E-08	1.093E-08	8.177E-09	6.460E-09	5.297E-09	4.464E-09	3.840E-09	3.358E-09
NE	1.428E-08	2.516E-08	1.648E-08	9.594E-09	6.565E-09	4.902E-09	3.919E-09	3.237E-09	2.746E-09	2.357E-09	2.057E-09
ENE	8.647E-09	1.291E-08	8.580E-09	5.074E-09	3.501E-09	2.629E-09	2.193E-09	1.858E-09	1.562E-09	1.341E-09	1.170E-09
E	8.182E-09	1.360E-08	9.094E-09	5.422E-09	3.761E-09	2.834E-09	2.251E-09	1.853E-09	1.635E-09	1.453E-09	1.270E-09
ESE	1.021E-08	1.347E-08	9.064E-09	5.440E-09	3.788E-09	2.860E-09	2.275E-09	1.875E-09	1.586E-09	1.369E-09	1.200E-09
SE	1.695E-08	1.028E-08	7.844E-09	5.640E-09	4.191E-09	3.371E-09	2.850E-09	2.485E-09	2.094E-09	1.800E-09	1.573E-09
SSE	2.473E-08	3.257E-08	2.111E-08	1.212E-08	8.211E-09	6.085E-09	4.771E-09	3.888E-09	3.259E-09	2.790E-09	2.430E-09

CHI/Q (SEC/METER CUBED) FOR EACH SEGMENT
SEGMENT BOUNDARIES IN MILES FROM THE SITE

DIRECTION FROM SITE	.5-1	1-2	2-3	3-4	4-5	5-10	10-20	20-30	30-40	40-50
S	4.584E-08	6.447E-08	4.971E-08	3.870E-08	4.076E-08	2.634E-08	1.116E-08	5.935E-09	3.834E-09	2.775E-09
SSW	2.155E-08	3.640E-08	3.461E-08	3.574E-08	3.025E-08	2.004E-08	8.686E-09	4.529E-09	2.885E-09	2.057E-09
SW	3.260E-08	7.029E-08	4.622E-08	2.843E-08	2.033E-08	1.425E-08	6.651E-09	3.750E-09	2.519E-09	1.813E-09
WSW	4.401E-08	9.361E-08	5.850E-08	3.497E-08	2.450E-08	1.591E-08	8.035E-09	4.229E-09	2.717E-09	1.960E-09
W	1.325E-07	1.260E-07	6.329E-08	3.582E-08	2.370E-08	1.163E-08	5.421E-09	3.103E-09	1.975E-09	1.413E-09
WNW	1.200E-07	1.758E-07	9.773E-08	5.923E-08	3.987E-08	2.018E-08	8.650E-09	4.616E-09	3.025E-09	2.181E-09
NW	1.540E-07	2.750E-07	1.548E-07	8.807E-08	5.790E-08	2.850E-08	1.168E-08	5.978E-09	3.869E-09	2.775E-09
NNW	1.026E-07	1.452E-07	1.420E-07	1.200E-07	8.453E-08	4.248E-08	1.655E-08	8.401E-09	5.518E-09	4.057E-09
N	1.263E-07	8.172E-08	5.564E-08	3.949E-08	2.967E-08	1.784E-08	1.197E-08	8.654E-09	5.802E-09	4.167E-09
NNE	7.054E-08	5.673E-08	3.901E-08	2.763E-08	2.249E-08	3.113E-08	1.624E-08	8.225E-09	5.312E-09	3.846E-09
NE	2.034E-08	2.817E-08	2.299E-08	1.694E-08	1.396E-08	1.889E-08	9.778E-09	4.952E-09	3.245E-09	2.361E-09
ENE	1.561E-08	1.954E-08	1.538E-08	1.105E-08	8.776E-09	1.004E-08	5.154E-09	2.687E-09	1.841E-09	1.343E-09
E	9.970E-09	1.563E-08	1.322E-08	9.861E-09	8.105E-09	1.039E-08	5.500E-09	2.848E-09	1.884E-09	1.439E-09
ESE	1.726E-08	2.355E-08	1.853E-08	1.330E-08	1.049E-08	1.079E-08	5.511E-09	2.873E-09	1.879E-09	1.370E-09
SE	2.830E-08	4.629E-08	3.692E-08	2.620E-08	1.937E-08	1.068E-08	5.486E-09	3.381E-09	2.440E-09	1.803E-09
SSE	3.949E-08	5.826E-08	4.548E-08	3.207E-08	2.515E-08	2.574E-08	1.238E-08	6.127E-09	3.901E-09	2.796E-09

ERP ELEVATED STACK RELEASES - JAN-DEC 2012
2.260 DAY DECAY, UNDEPLETED
CORRECTED USING STANDARD OPEN TERRAIN FACTORS

ANNUAL AVERAGE CHI/Q (SEC/METER CUBED) DISTANCE IN MILES FROM THE SITE

SECTOR	.250	.500	.750	1.000	1.500	2.000	2.500	3.000	3.500	4.000	4.500
S	2.042E-10	1.393E-08	4.391E-08	6.312E-08	6.996E-08	6.070E-08	5.021E-08	4.152E-08	3.475E-08	3.952E-08	4.323E-08
SSW	4.748E-11	4.516E-09	1.935E-08	3.165E-08	3.933E-08	3.634E-08	3.137E-08	3.576E-08	3.783E-08	3.333E-08	2.971E-08
SW	2.388E-11	3.078E-09	2.352E-08	5.405E-08	9.080E-08	6.254E-08	4.576E-08	3.518E-08	2.811E-08	2.314E-08	1.951E-08
WSW	5.605E-11	4.843E-09	3.174E-08	7.262E-08	1.237E-07	8.081E-08	5.756E-08	4.358E-08	3.448E-08	2.820E-08	2.367E-08
W	2.266E-09	4.795E-08	1.428E-07	1.666E-07	1.454E-07	9.026E-08	6.194E-08	4.557E-08	3.523E-08	2.827E-08	2.333E-08
WNW	3.191E-10	2.106E-08	1.061E-07	1.795E-07	2.229E-07	1.374E-07	9.410E-08	7.312E-08	5.943E-08	4.750E-08	3.910E-08
NW	1.420E-08	4.783E-08	1.239E-07	2.292E-07	3.728E-07	2.230E-07	1.500E-07	1.118E-07	8.751E-08	6.949E-08	5.690E-08
NNW	3.040E-08	6.676E-08	1.001E-07	1.221E-07	1.536E-07	1.497E-07	1.433E-07	1.346E-07	1.273E-07	1.011E-07	8.278E-08
N	1.023E-07	1.453E-07	1.377E-07	1.081E-07	8.243E-08	6.770E-08	5.631E-08	4.664E-08	3.938E-08	3.382E-08	2.948E-08
NNE	1.386E-08	5.774E-08	7.844E-08	7.086E-08	5.872E-08	4.789E-08	3.919E-08	3.255E-08	2.751E-08	2.364E-08	2.062E-08
NE	6.312E-10	8.241E-09	1.982E-08	2.674E-08	3.020E-08	2.720E-08	2.323E-08	1.973E-08	1.689E-08	1.462E-08	1.281E-08
ENE	3.999E-09	8.899E-09	1.520E-08	1.921E-08	2.099E-08	1.849E-08	1.552E-08	1.299E-08	1.099E-08	9.424E-09	8.191E-09
E	4.938E-10	3.343E-09	9.120E-09	1.389E-08	1.684E-08	1.549E-08	1.337E-08	1.143E-08	9.833E-09	8.544E-09	7.510E-09
ESE	9.826E-11	6.102E-09	1.690E-08	2.306E-08	2.537E-08	2.231E-08	1.871E-08	1.567E-08	1.325E-08	1.137E-08	9.881E-09
SE	2.667E-10	4.402E-09	2.511E-08	4.259E-08	5.060E-08	4.472E-08	3.735E-08	3.109E-08	2.614E-08	2.229E-08	1.926E-08
SSE	1.602E-10	1.025E-08	3.701E-08	5.587E-08	6.336E-08	5.535E-08	4.596E-08	3.812E-08	3.198E-08	2.721E-08	2.349E-08

ANNUAL AVERAGE CHI/Q (SEC/METER CUBED) DISTANCE IN MILES FROM THE SITE

SECTOR	5.000	7.500	10.000	15.000	20.000	25.000	30.000	35.000	40.000	45.000	50.000
S	3.876E-08	2.789E-08	1.823E-08	1.051E-08	7.499E-09	5.721E-09	4.438E-09	3.579E-09	3.003E-09	2.564E-09	2.209E-09
SSW	2.764E-08	2.190E-08	1.422E-08	8.137E-09	5.782E-09	4.310E-09	3.333E-09	2.681E-09	2.219E-09	1.877E-09	1.615E-09
SW	1.832E-08	1.578E-08	1.050E-08	6.179E-09	4.519E-09	3.500E-09	2.827E-09	2.278E-09	1.886E-09	1.596E-09	1.373E-09
WSW	2.157E-08	1.617E-08	1.218E-08	7.910E-09	5.330E-09	3.920E-09	3.046E-09	2.457E-09	2.037E-09	1.726E-09	1.486E-09
W	1.970E-08	1.076E-08	7.791E-09	5.203E-09	3.926E-09	2.886E-09	2.228E-09	1.788E-09	1.477E-09	1.246E-09	1.070E-09
WNW	3.345E-08	1.935E-08	1.345E-08	8.403E-09	5.794E-09	4.332E-09	3.425E-09	2.787E-09	2.316E-09	1.961E-09	1.689E-09
NW	4.836E-08	2.724E-08	1.872E-08	1.143E-08	7.686E-09	5.652E-09	4.478E-09	3.634E-09	3.018E-09	2.561E-09	2.210E-09
NNW	7.134E-08	4.188E-08	2.739E-08	1.585E-08	1.078E-08	7.987E-09	6.319E-09	5.177E-09	4.396E-09	3.762E-09	3.254E-09
N	2.612E-08	1.672E-08	1.418E-08	1.191E-08	1.034E-08	8.643E-09	6.785E-09	5.506E-09	4.585E-09	3.901E-09	3.374E-09
NNE	2.282E-08	4.101E-08	2.674E-08	1.544E-08	1.048E-08	7.754E-09	6.060E-09	4.916E-09	4.099E-09	3.489E-09	3.018E-09
NE	1.415E-08	2.479E-08	1.615E-08	9.310E-09	6.307E-09	4.663E-09	3.691E-09	3.019E-09	2.535E-09	2.156E-09	1.863E-09
ENE	8.553E-09	1.269E-08	8.389E-09	4.906E-09	3.348E-09	2.486E-09	2.051E-09	1.719E-09	1.430E-09	1.214E-09	1.048E-09
E	8.107E-09	1.339E-08	8.910E-09	5.257E-09	3.609E-09	2.692E-09	2.116E-09	1.724E-09	1.505E-09	1.323E-09	1.144E-09
ESE	1.012E-08	1.328E-08	8.893E-09	5.286E-09	3.645E-09	2.727E-09	2.148E-09	1.753E-09	1.469E-09	1.256E-09	1.091E-09
SE	1.684E-08	1.017E-08	7.739E-09	5.520E-09	4.067E-09	3.243E-09	2.715E-09	2.345E-09	1.958E-09	1.669E-09	1.446E-09
SSE	2.457E-08	3.216E-08	2.075E-08	1.180E-08	7.927E-09	5.822E-09	4.523E-09	3.653E-09	3.034E-09	2.575E-09	2.222E-09

CHI/Q (SEC/METER CUBED) FOR EACH SEGMENT
SEGMENT BOUNDARIES IN MILES FROM THE SITE

DIRECTION FROM SITE	.5-1	1-2	2-3	3-4	4-5	5-10	10-20	20-30	30-40	40-50
S	4.579E-08	6.432E-08	4.953E-08	3.850E-08	4.047E-08	2.601E-08	1.088E-08	5.682E-09	3.605E-09	2.562E-09
SSW	2.152E-08	3.630E-08	3.445E-08	3.552E-08	3.001E-08	1.976E-08	8.442E-09	4.311E-09	2.691E-09	1.882E-09
SW	3.255E-08	7.007E-08	4.600E-08	2.823E-08	2.014E-08	1.399E-08	6.400E-09	3.503E-09	2.286E-09	1.599E-09
WSW	4.393E-08	9.328E-08	5.817E-08	3.469E-08	2.423E-08	1.560E-08	7.713E-09	3.946E-09	2.465E-09	1.729E-09
W	1.323E-07	1.256E-07	6.294E-08	3.553E-08	2.345E-08	1.143E-08	5.211E-09	2.900E-09	1.795E-09	1.249E-09
WNW	1.198E-07	1.752E-07	9.725E-08	5.880E-08	3.949E-08	1.986E-08	8.364E-09	4.359E-09	2.790E-09	1.965E-09
NW	1.538E-07	2.743E-07	1.542E-07	8.758E-08	5.747E-08	2.815E-08	1.139E-08	5.725E-09	3.641E-09	2.566E-09
NNW	1.025E-07	1.449E-07	1.415E-07	1.194E-07	8.396E-08	4.199E-08	1.616E-08	8.064E-09	5.206E-09	3.762E-09
N	1.263E-07	8.159E-08	5.548E-08	3.934E-08	2.952E-08	1.768E-08	1.172E-08	8.353E-09	5.520E-09	3.908E-09
NNE	7.047E-08	5.660E-08	3.885E-08	2.747E-08	2.233E-08	3.063E-08	1.574E-08	7.802E-09	4.932E-09	3.495E-09
NE	2.032E-08	2.810E-08	2.289E-08	1.683E-08	1.384E-08	1.858E-08	9.496E-09	4.713E-09	3.027E-09	2.160E-09
ENE	1.558E-08	1.948E-08	1.530E-08	1.097E-08	8.690E-09	9.860E-09	4.987E-09	2.542E-09	1.704E-09	1.217E-09
E	9.957E-09	1.558E-08	1.316E-08	9.799E-09	8.038E-09	1.023E-08	5.337E-09	2.706E-09	1.752E-09	1.311E-09
ESE	1.724E-08	2.350E-08	1.845E-08	1.322E-08	1.041E-08	1.063E-08	5.358E-09	2.740E-09	1.758E-09	1.258E-09
SE	2.828E-08	4.621E-08	3.681E-08	2.609E-08	1.926E-08	1.057E-08	5.367E-09	3.251E-09	2.303E-09	1.672E-09
SSE	3.945E-08	5.814E-08	4.533E-08	3.192E-08	2.499E-08	2.540E-08	1.207E-08	5.864E-09	3.666E-09	2.580E-09

ERP ELEVATED STACK RELEASES - JAN-DEC 2012
8.000 DAY DECAY, DEPLETED
CORRECTED USING STANDARD OPEN TERRAIN FACTORS

ANNUAL AVERAGE CHI/Q (SEC/METER CUBED) DISTANCE IN MILES FROM THE SITE

SECTOR	.250	.500	.750	1.000	1.500	2.000	2.500	3.000	3.500	4.000	4.500
S	2.042E-10	1.382E-08	4.352E-08	6.274E-08	6.919E-08	5.961E-08	4.897E-08	4.023E-08	3.348E-08	3.805E-08	4.169E-08
SSW	4.749E-11	4.485E-09	1.923E-08	3.154E-08	3.899E-08	3.581E-08	3.074E-08	3.498E-08	3.697E-08	3.249E-08	2.891E-08
SW	2.389E-11	3.057E-09	2.342E-08	5.398E-08	9.001E-08	6.158E-08	4.483E-08	3.434E-08	2.735E-08	2.247E-08	1.891E-08
WSW	5.606E-11	4.806E-09	3.157E-08	7.243E-08	1.225E-07	7.950E-08	5.637E-08	4.254E-08	3.358E-08	2.742E-08	2.297E-08
W	2.267E-09	4.744E-08	1.415E-07	1.644E-07	1.425E-07	8.784E-08	5.996E-08	4.393E-08	3.385E-08	2.708E-08	2.230E-08
WNW	3.192E-10	2.093E-08	1.056E-07	1.780E-07	2.197E-07	1.344E-07	9.160E-08	7.100E-08	5.762E-08	4.589E-08	3.762E-08
NW	1.420E-08	4.743E-08	1.225E-07	2.273E-07	3.685E-07	2.189E-07	1.465E-07	1.088E-07	8.502E-08	6.727E-08	5.484E-08
NNW	3.040E-08	6.619E-08	9.849E-08	1.207E-07	1.518E-07	1.474E-07	1.411E-07	1.326E-07	1.255E-07	9.937E-08	8.107E-08
N	1.023E-07	1.441E-07	1.350E-07	1.057E-07	8.054E-08	6.603E-08	5.478E-08	4.524E-08	3.810E-08	3.264E-08	2.840E-08
NNE	1.386E-08	5.725E-08	7.695E-08	6.944E-08	5.747E-08	4.672E-08	3.809E-08	3.152E-08	2.655E-08	2.275E-08	1.979E-08
NE	6.312E-10	8.175E-09	1.959E-08	2.653E-08	2.986E-08	2.675E-08	2.273E-08	1.921E-08	1.638E-08	1.413E-08	1.234E-08
ENE	4.000E-09	8.827E-09	1.502E-08	1.905E-08	2.074E-08	1.816E-08	1.515E-08	1.261E-08	1.062E-08	9.060E-09	7.843E-09
E	4.939E-10	3.318E-09	9.050E-09	1.383E-08	1.669E-08	1.526E-08	1.310E-08	1.115E-08	9.551E-09	8.272E-09	7.250E-09
ESE	9.827E-11	6.055E-09	1.673E-08	2.289E-08	2.508E-08	2.192E-08	1.827E-08	1.521E-08	1.281E-08	1.094E-08	9.470E-09
SE	2.668E-10	4.376E-09	2.503E-08	4.253E-08	5.017E-08	4.400E-08	3.649E-08	3.018E-08	2.524E-08	2.141E-08	1.841E-08
SSE	1.602E-10	1.018E-08	3.674E-08	5.563E-08	6.272E-08	5.439E-08	4.485E-08	3.696E-08	3.083E-08	2.610E-08	2.243E-08

ANNUAL AVERAGE CHI/Q (SEC/METER CUBED) DISTANCE IN MILES FROM THE SITE

SECTOR	5.000	7.500	10.000	15.000	20.000	25.000	30.000	35.000	40.000	45.000	50.000
S	3.732E-08	2.656E-08	1.687E-08	9.191E-09	6.153E-09	4.458E-09	3.333E-09	2.603E-09	2.128E-09	1.778E-09	1.503E-09
SSW	2.688E-08	2.110E-08	1.331E-08	7.174E-09	4.793E-09	3.462E-09	2.607E-09	2.049E-09	1.662E-09	1.379E-09	1.167E-09
SW	1.778E-08	1.530E-08	9.903E-09	5.502E-09	3.760E-09	2.757E-09	2.169E-09	1.709E-09	1.389E-09	1.156E-09	9.790E-10
WSW	2.097E-08	1.557E-08	1.145E-08	7.128E-09	4.648E-09	3.330E-09	2.532E-09	2.004E-09	1.635E-09	1.365E-09	1.161E-09
W	1.879E-08	1.020E-08	7.347E-09	4.710E-09	3.397E-09	2.433E-09	1.837E-09	1.447E-09	1.176E-09	9.783E-10	8.291E-10
WNW	3.205E-08	1.810E-08	1.225E-08	7.224E-09	4.646E-09	3.299E-09	2.529E-09	2.009E-09	1.633E-09	1.356E-09	1.147E-09
NW	4.641E-08	2.547E-08	1.701E-08	9.828E-09	6.297E-09	4.450E-09	3.422E-09	2.709E-09	2.201E-09	1.831E-09	1.551E-09
NNW	6.958E-08	3.978E-08	2.521E-08	1.366E-08	8.590E-09	5.970E-09	4.480E-09	3.533E-09	2.919E-09	2.441E-09	2.067E-09
N	2.511E-08	1.598E-08	1.360E-08	1.155E-08	9.874E-09	7.918E-09	6.071E-09	4.826E-09	3.945E-09	3.301E-09	2.813E-09
NNE	2.199E-08	4.016E-08	2.542E-08	1.393E-08	8.982E-09	6.378E-09	4.813E-09	3.787E-09	3.073E-09	2.552E-09	2.160E-09
NE	1.367E-08	2.424E-08	1.533E-08	8.379E-09	5.390E-09	3.820E-09	2.930E-09	2.341E-09	1.927E-09	1.609E-09	1.368E-09
ENE	8.195E-09	1.236E-08	7.947E-09	4.386E-09	2.795E-09	1.962E-09	1.541E-09	1.246E-09	1.011E-09	8.392E-10	7.099E-10
E	7.840E-09	1.314E-08	8.492E-09	4.714E-09	3.010E-09	2.115E-09	1.579E-09	1.230E-09	1.031E-09	8.757E-10	7.381E-10
ESE	9.705E-09	1.292E-08	8.417E-09	4.722E-09	3.041E-09	2.149E-09	1.612E-09	1.260E-09	1.016E-09	8.379E-10	7.042E-10
SE	1.604E-08	9.546E-09	7.220E-09	5.153E-09	3.803E-09	3.049E-09	2.573E-09	2.234E-09	1.840E-09	1.551E-09	1.329E-09
SSE	2.345E-08	3.099E-08	1.940E-08	1.048E-08	6.700E-09	4.727E-09	3.549E-09	2.781E-09	2.248E-09	1.862E-09	1.572E-09

CHI/Q (SEC/METER CUBED) FOR EACH SEGMENT

SEGMENT BOUNDARIES IN MILES FROM THE SITE

DIRECTION FROM SITE	.5-1	1-2	2-3	3-4	4-5	5-10	10-20	20-30	30-40	40-50
S	4.546E-08	6.350E-08	4.831E-08	3.715E-08	3.899E-08	2.465E-08	9.548E-09	4.460E-09	2.631E-09	1.780E-09
SSW	2.142E-08	3.592E-08	3.379E-08	3.469E-08	2.922E-08	1.892E-08	7.479E-09	3.475E-09	2.061E-09	1.384E-09
SW	3.248E-08	6.937E-08	4.510E-08	2.749E-08	1.955E-08	1.345E-08	5.706E-09	2.789E-09	1.719E-09	1.159E-09
WSW	4.378E-08	9.225E-08	5.701E-08	3.379E-08	2.355E-08	1.494E-08	6.987E-09	3.362E-09	2.014E-09	1.370E-09
W	1.308E-07	1.231E-07	6.098E-08	3.415E-08	2.242E-08	1.084E-08	4.712E-09	2.452E-09	1.455E-09	9.816E-10
WNW	1.190E-07	1.725E-07	9.478E-08	5.697E-08	3.801E-08	1.860E-08	7.195E-09	3.350E-09	2.015E-09	1.361E-09
NW	1.524E-07	2.706E-07	1.507E-07	8.506E-08	5.540E-08	2.636E-08	9.854E-09	4.531E-09	2.719E-09	1.837E-09
NNW	1.012E-07	1.429E-07	1.394E-07	1.176E-07	8.224E-08	3.993E-08	1.397E-08	6.073E-09	3.570E-09	2.444E-09
N	1.240E-07	7.969E-08	5.396E-08	3.806E-08	2.844E-08	1.695E-08	1.126E-08	7.701E-09	4.846E-09	3.311E-09
NNE	6.924E-08	5.536E-08	3.776E-08	2.652E-08	2.148E-08	2.957E-08	1.428E-08	6.446E-09	3.808E-09	2.561E-09
NE	2.014E-08	2.774E-08	2.240E-08	1.633E-08	1.336E-08	1.793E-08	8.595E-09	3.883E-09	2.351E-09	1.614E-09
ENE	1.544E-08	1.922E-08	1.494E-08	1.059E-08	8.334E-09	9.475E-09	4.470E-09	2.016E-09	1.241E-09	8.421E-10
E	9.902E-09	1.542E-08	1.290E-08	9.520E-09	7.771E-09	9.896E-09	4.796E-09	2.139E-09	1.254E-09	8.708E-10
ESE	1.709E-08	2.319E-08	1.802E-08	1.278E-08	9.991E-09	1.020E-08	4.796E-09	2.172E-09	1.267E-09	8.410E-10
SE	2.822E-08	4.573E-08	3.597E-08	2.519E-08	1.842E-08	9.955E-09	5.013E-09	3.060E-09	2.181E-09	1.554E-09
SSE	3.923E-08	5.744E-08	4.424E-08	3.078E-08	2.389E-08	2.416E-08	1.078E-08	4.782E-09	2.797E-09	1.869E-09

ERP ELEVATED STACK RELEASES - JAN-DEC 2012
CORRECTED USING STANDARD OPEN TERRAIN FACTORS

********** RELATIVE DEPOSITION PER UNIT AREA (M**-2) AT FIXED POINTS BY DOWNWIND SECTORS **********

DIRECTION FROM SITE	.25	.50	.75	1.00	1.50	2.00	2.50	3.00	3.50	4.00	4.50
	DISTANCES IN MILES										
S	1.934E-09	2.156E-09	2.694E-09	2.355E-09	1.353E-09	8.832E-10	6.160E-10	4.497E-10	3.395E-10	2.747E-10	2.524E-10
SSW	4.561E-10	7.110E-10	1.108E-09	1.054E-09	6.330E-10	4.194E-10	2.945E-10	2.158E-10	2.049E-10	1.549E-10	1.212E-10
SW	2.295E-10	3.644E-10	5.728E-10	5.467E-10	6.313E-10	3.439E-10	2.131E-10	1.447E-10	1.045E-10	7.904E-11	6.185E-11
WSW	4.870E-10	5.592E-10	7.166E-10	1.218E-09	6.922E-10	3.753E-10	2.318E-10	1.571E-10	1.134E-10	8.570E-11	6.705E-11
W	7.514E-10	3.242E-09	2.835E-09	1.845E-09	9.014E-10	4.795E-10	2.929E-10	1.967E-10	1.410E-10	1.060E-10	8.258E-11
WNW	9.585E-10	1.025E-09	3.175E-09	2.394E-09	1.440E-09	7.296E-10	4.355E-10	2.930E-10	2.207E-10	1.713E-10	1.407E-10
NW	4.882E-09	3.977E-09	3.388E-09	4.281E-09	2.532E-09	1.264E-09	7.520E-10	5.043E-10	3.700E-10	2.915E-10	2.429E-10
NNW	6.496E-09	5.221E-09	4.344E-09	2.946E-09	2.337E-09	1.253E-09	7.725E-10	6.308E-10	4.688E-10	3.748E-10	3.174E-10
N	1.649E-08	1.255E-08	9.385E-09	5.744E-09	2.505E-09	1.462E-09	9.612E-10	6.802E-10	5.055E-10	3.893E-10	3.082E-10
NNE	5.893E-09	4.639E-09	3.715E-09	2.435E-09	1.136E-09	6.842E-10	4.580E-10	3.272E-10	2.444E-10	1.886E-10	1.493E-10
NE	1.073E-09	1.040E-09	1.131E-09	9.225E-10	5.086E-10	3.274E-10	2.268E-10	1.650E-10	1.243E-10	9.632E-11	7.627E-11
ENE	8.673E-10	8.158E-10	8.565E-10	6.853E-10	3.731E-10	2.391E-10	1.653E-10	1.201E-10	9.045E-11	7.005E-11	5.547E-11
E	2.884E-10	3.805E-10	5.393E-10	4.965E-10	2.932E-10	1.932E-10	1.353E-10	9.901E-11	7.484E-11	5.804E-11	4.596E-11
ESE	9.519E-10	9.860E-10	1.151E-09	9.750E-10	5.498E-10	3.567E-10	2.481E-10	1.808E-10	1.364E-10	1.057E-10	8.371E-11
SE	6.540E-10	1.223E-09	2.063E-09	2.013E-09	1.223E-09	8.134E-10	5.724E-10	4.196E-10	3.175E-10	2.464E-10	1.951E-10
SSE	1.686E-09	2.016E-09	2.668E-09	2.390E-09	1.392E-09	9.127E-10	6.380E-10	4.662E-10	3.522E-10	2.731E-10	2.163E-10

DIRECTION FROM SITE	5.00	7.50	10.00	15.00	20.00	25.00	30.00	35.00	40.00	45.00	50.00
	DISTANCES IN MILES										
S	2.029E-10	1.427E-10	9.730E-11	5.628E-11	3.555E-11	2.561E-11	1.831E-11	1.371E-11	1.082E-11	8.634E-12	7.048E-12
SSW	9.785E-11	9.123E-11	6.613E-11	4.019E-11	2.370E-11	1.642E-11	1.177E-11	8.838E-12	6.902E-12	5.513E-12	4.500E-12
SW	4.996E-11	5.037E-11	3.701E-11	2.273E-11	1.453E-11	9.268E-12	6.486E-12	4.870E-12	3.787E-12	3.025E-12	2.469E-12
WSW	5.446E-11	4.715E-11	3.380E-11	2.079E-11	1.258E-11	8.437E-12	6.105E-12	4.584E-12	3.564E-12	2.847E-12	2.324E-12
W	6.632E-11	2.972E-11	3.362E-11	2.045E-11	1.330E-11	9.037E-12	6.475E-12	4.862E-12	3.781E-12	3.020E-12	2.465E-12
WNW	1.219E-10	7.350E-11	5.245E-11	3.153E-11	2.007E-11	1.338E-11	9.437E-12	7.087E-12	5.547E-12	4.431E-12	3.616E-12
NW	2.122E-10	1.327E-10	9.640E-11	5.838E-11	3.551E-11	2.379E-11	1.721E-11	1.292E-11	1.008E-11	8.056E-12	6.575E-12
NNW	2.816E-10	1.844E-10	1.367E-10	8.483E-11	5.471E-11	3.655E-11	2.462E-11	1.762E-11	1.368E-11	1.093E-11	8.919E-12
N	2.493E-10	1.195E-10	7.382E-11	4.008E-11	8.681E-11	5.201E-11	3.724E-11	2.796E-11	2.174E-11	1.737E-11	1.418E-11
NNE	1.207E-10	1.955E-10	1.212E-10	6.294E-11	3.841E-11	2.571E-11	1.836E-11	1.373E-11	1.065E-11	8.482E-12	6.909E-12
NE	6.150E-11	1.106E-10	6.925E-11	3.638E-11	2.228E-11	1.489E-11	1.048E-11	7.807E-12	6.071E-12	4.874E-12	3.979E-12
ENE	4.473E-11	4.834E-11	3.485E-11	2.112E-11	1.350E-11	8.993E-12	6.354E-12	4.484E-12	3.488E-12	2.788E-12	2.277E-12
E	3.704E-11	5.080E-11	3.801E-11	2.367E-11	1.518E-11	1.005E-11	7.047E-12	5.157E-12	3.924E-12	3.017E-12	2.454E-12
ESE	6.748E-11	6.984E-11	4.984E-11	2.995E-11	1.909E-11	1.270E-11	8.971E-12	6.619E-12	5.072E-12	4.008E-12	3.242E-12
SE	1.572E-10	7.445E-11	4.540E-11	2.389E-11	1.456E-11	1.000E-11	7.455E-12	1.328E-11	1.022E-11	8.108E-12	6.594E-12
SSE	1.743E-10	2.100E-10	1.291E-10	6.639E-11	4.040E-11	2.705E-11	1.934E-11	1.449E-11	1.124E-11	8.969E-12	7.311E-12

********** RELATIVE DEPOSITION PER UNIT AREA (M**-2) BY DOWNWIND SECTORS **********

DIRECTION FROM SITE	.5-1	1-2	2-3	3-4	4-5	5-10	10-20	20-30	30-40	40-50
	SEGMENT BOUNDARIES IN MILES									
S	2.424E-09	1.367E-09	6.207E-10	3.463E-10	2.407E-10	1.359E-10	5.618E-11	2.534E-11	1.392E-11	8.694E-12
SSW	9.957E-10	6.316E-10	2.963E-10	1.890E-10	1.225E-10	8.154E-11	3.862E-11	1.650E-11	8.938E-12	5.550E-12
SW	5.149E-10	4.848E-10	2.206E-10	1.063E-10	6.254E-11	4.434E-11	2.226E-11	9.558E-12	4.919E-12	3.045E-12
WSW	9.047E-10	6.683E-10	2.402E-10	1.153E-10	6.791E-11	4.284E-11	2.003E-11	8.610E-12	4.630E-12	2.866E-12
W	2.485E-09	9.235E-10	3.042E-10	1.436E-10	8.349E-11	3.958E-11	2.020E-11	9.149E-12	4.911E-12	3.040E-12
WNW	2.350E-09	1.336E-09	4.569E-10	2.225E-10	1.428E-10	7.489E-11	3.108E-11	1.359E-11	7.172E-12	4.460E-12
NW	3.916E-09	2.357E-09	7.894E-10	3.785E-10	2.459E-10	1.342E-10	5.666E-11	2.428E-11	1.307E-11	8.108E-12
NNW	3.918E-09	1.991E-09	8.440E-10	4.793E-10	3.211E-10	1.848E-10	8.297E-11	3.662E-11	1.812E-11	1.100E-11
N	8.470E-09	2.761E-09	9.822E-10	5.112E-10	3.104E-10	1.281E-10	6.835E-11	5.538E-11	2.824E-11	1.748E-11
NNE	3.352E-09	1.224E-09	4.660E-10	2.468E-10	1.504E-10	1.458E-10	6.498E-11	2.616E-11	1.388E-11	8.541E-12
NE	1.018E-09	5.200E-10	2.289E-10	1.253E-10	7.674E-11	8.131E-11	3.742E-11	1.510E-11	7.910E-12	4.897E-12
ENE	7.714E-10	3.829E-10	1.669E-10	9.114E-11	5.581E-11	4.154E-11	2.079E-11	9.140E-12	4.639E-12	2.806E-12
E	4.850E-10	2.939E-10	1.362E-10	7.535E-11	4.623E-11	4.205E-11	2.308E-11	1.022E-11	5.227E-12	3.077E-12
ESE	1.036E-09	5.585E-10	2.501E-10	1.374E-10	8.422E-11	6.043E-11	2.954E-11	1.291E-11	6.702E-12	4.039E-12
SE	1.854E-09	1.217E-09	5.756E-10	3.196E-10	1.962E-10	7.992E-11	2.452E-11	1.020E-11	1.045E-11	8.173E-12
SSE	2.400E-09	1.401E-09	6.425E-10	3.546E-10	2.175E-10	1.661E-10	6.877E-11	2.753E-11	1.464E-11	9.029E-12

ERP ELEVATED STACK RELEASES - JAN-DEC 2012
CORRECTED USING STANDARD OPEN TERRAIN FACTORS
SPECIFIC POINTS OF INTEREST

RELEASE ID	TYPE OF LOCATION	DIRECTION FROM SITE	DIST. (MI)	X/Q (SEC/M3) NO DECAY UNDEPLETED	X/Q (SEC/M3) 2.26 DAY DECAY UNDEPLETED	X/Q (SEC/M3) 8.0 DAY DECAY DEPLETED	D/Q (PER SQ.METER)
A	Site Boundary	S	.80	4.9E-08	4.9E-08	4.8E-08	2.7E-09
A	Site Boundary	SSW	.82	2.4E-08	2.4E-08	2.4E-08	1.1E-09
A	Site Boundary	SW	.97	5.1E-08	5.1E-08	5.1E-08	5.6E-10
A	Site Boundary	WSW	.93	6.1E-08	6.1E-08	6.1E-08	1.1E-09
A	Site Boundary	W	.91	1.6E-07	1.6E-07	1.6E-07	2.1E-09
A	Site Boundary	WNW	.94	1.7E-07	1.6E-07	1.6E-07	2.7E-09
A	Site Boundary	NW	.81	1.5E-07	1.5E-07	1.5E-07	3.1E-09
A	Site Boundary	NNW	.69	8.9E-08	8.9E-08	8.8E-08	4.5E-09
A	Site Boundary	N	.67	1.4E-07	1.4E-07	1.4E-07	1.0E-08
A	Site Boundary	NNE	.60	6.8E-08	6.8E-08	6.7E-08	4.2E-09
A	Site Boundary	NE	.62	1.3E-08	1.3E-08	1.3E-08	1.1E-09
A	Site Boundary	ENE	.59	1.0E-08	1.0E-08	1.0E-08	8.2E-10
A	Site Boundary	E	.53	3.7E-09	3.7E-09	3.6E-09	3.9E-10
A	Site Boundary	ESE	.54	7.4E-09	7.4E-09	7.3E-09	1.0E-09
A	Site Boundary	SE	.65	1.4E-08	1.4E-08	1.4E-08	1.7E-09
A	Site Boundary	SSE	.81	4.3E-08	4.3E-08	4.3E-08	2.7E-09
A	Nearest Res	SSW	3.00	3.6E-08	3.6E-08	3.5E-08	2.2E-10
A	Nearest Res	SW	1.30	8.1E-08	8.1E-08	8.1E-08	8.4E-10
A	Nearest Res	WSW	1.90	8.8E-08	8.7E-08	8.6E-08	4.2E-10
A	Nearest Res	W	2.90	4.9E-08	4.8E-08	4.7E-08	2.1E-10
A	Nearest Res	WNW	1.70	1.8E-07	1.8E-07	1.8E-07	1.1E-09
A	Nearest Res	NW	.90	1.9E-07	1.9E-07	1.8E-07	4.8E-09
A	Nearest Res	NNW	1.90	1.5E-07	1.5E-07	1.5E-07	1.4E-09
A	Nearest Res	N	3.00	4.7E-08	4.7E-08	4.5E-08	6.8E-10
A	Nearest Res	NNE	1.90	5.0E-08	5.0E-08	4.9E-08	7.5E-10
A	Nearest Res	NE	3.00	2.0E-08	2.0E-08	1.9E-08	1.6E-10
A	Nearest Res	ENE	1.70	2.0E-08	2.0E-08	2.0E-08	3.1E-10
A	Nearest Res	E	2.20	1.5E-08	1.5E-08	1.4E-08	1.7E-10
A	Nearest Res	ESE	2.30	2.0E-08	2.0E-08	2.0E-08	2.9E-10
A	Nearest Res	SE	3.00	3.1E-08	3.1E-08	3.0E-08	4.2E-10
A	Nearest Cow	NNW	3.50	1.3E-07	1.3E-07	1.3E-07	4.7E-10
A	Nearest Garde	SSW	3.00	3.6E-08	3.6E-08	3.5E-08	2.2E-10
A	Nearest Garde	SW	1.30	8.1E-08	8.1E-08	8.1E-08	8.4E-10
A	Nearest Garde	WSW	1.90	8.8E-08	8.7E-08	8.6E-08	4.2E-10
A	Nearest Garde	W	2.90	4.9E-08	4.8E-08	4.7E-08	2.1E-10
A	Nearest Garde	WNW	2.40	1.0E-07	1.0E-07	9.8E-08	4.8E-10
A	Nearest Garde	NW	2.90	1.2E-07	1.2E-07	1.1E-07	5.4E-10
A	Nearest Garde	NNW	2.80	1.4E-07	1.4E-07	1.4E-07	7.2E-10
A	Nearest Garde	ENE	1.70	2.0E-08	2.0E-08	2.0E-08	3.1E-10
A	Nearest Garde	E	2.20	1.5E-08	1.5E-08	1.4E-08	1.7E-10
A	Nearest Garde	ESE	2.30	2.0E-08	2.0E-08	2.0E-08	2.9E-10
A	MAXIMUM CHI/Q	S	1.50	7.0E-08	7.0E-08	6.9E-08	1.4E-09
A	MAXIMUM CHI/Q	SSW	1.50	3.9E-08	3.9E-08	3.9E-08	6.3E-10
A	MAXIMUM CHI/Q	SW	1.50	9.1E-08	9.1E-08	9.0E-08	6.3E-10
A	MAXIMUM CHI/Q	WSW	1.50	1.2E-07	1.2E-07	1.2E-07	6.9E-10
A	MAXIMUM CHI/Q	W	1.00	1.7E-07	1.7E-07	1.6E-07	1.8E-09
A	MAXIMUM CHI/Q	WNW	1.50	2.2E-07	2.2E-07	2.2E-07	1.4E-09
A	MAXIMUM CHI/Q	NW	1.50	3.7E-07	3.7E-07	3.7E-07	2.5E-09
A	MAXIMUM CHI/Q	NNW	1.50	1.5E-07	1.5E-07	1.5E-07	2.3E-09
A	MAXIMUM CHI/Q	N	.50	1.4E-07	1.4E-07	1.4E-07	1.3E-08
A	MAXIMUM CHI/Q	NNE	.75	7.8E-08	7.8E-08	7.7E-08	3.7E-09
A	MAXIMUM CHI/Q	NE	1.50	3.0E-08	3.0E-08	3.0E-08	5.1E-10
A	MAXIMUM CHI/Q	ENE	1.50	2.1E-08	2.1E-08	2.1E-08	3.7E-10
A	MAXIMUM CHI/Q	E	1.50	1.7E-08	1.7E-08	1.7E-08	2.9E-10
A	MAXIMUM CHI/Q	ESE	1.50	2.5E-08	2.5E-08	2.5E-08	5.5E-10
A	MAXIMUM CHI/Q	SE	1.50	5.1E-08	5.1E-08	5.0E-08	1.2E-09
A	MAXIMUM CHI/Q	SSE	1.50	6.3E-08	6.3E-08	6.3E-08	1.4E-09

ATMOSPHERIC DIFFUSION MODEL

Onsite meteorological data from January 1 through December 31, 2012 were used to determine long-term (routine) diffusion estimates for evaluating normal atmospheric releases from Cooper Nuclear Station. Atmospheric dispersion parameters (X/Q values) were determined for the site boundary distances from each release point, the standard population distances, and special locations for nearest residence, cow, and garden using the methodology presented in U.S. NRC Regulatory Guide 1.111 (Rev.1) and the computer code XOQDOQ (NUREG/CR2919). Two release modes were analyzed. Releases from the 99-meter free-standing stack were considered 100 percent elevated, while releases from the reactor building, turbine-generator building, radwaste building and augmented radwaste building vents were considered as a 100 percent ground level release (one combined source term was assumed to apply for these vents).

Winds were obtained from measurements at the 10-meter level (for ground-level releases) and the 100-meter level (for elevated releases), and the stability class was based on the vertical temperature gradient between 60 meters and 10 meters (for ground releases) and 100 meters and 10 meters (for elevated releases). In accordance with Regulatory Guide 1.111, calm periods were distributed directionally in proportion to the directional distribution within a stability class of the lowest wind speed group. For the calculations, calm periods were assigned a speed of one-half the threshold wind speed of the wind vane or anemometer, whichever is higher.

The Gaussian straight-line trajectory model, which assumes that the air flow transports and diffuses effluents along a straight line through the entire region of interest in the airflow direction at the release point, was modified to account for various modes of effluent releases. In the case of an elevated release, plume rise due to momentum effects was incorporated into the calculation. For ground-level releases, building wake effects were considered.

The mathematical equation used in the Gaussian straight-line trajectory model is:

$$(X/Q)_l = 2.032 \sum_{jk} \frac{f_{ijk}}{x u_{jk} \Sigma_{zk}} \exp\left[\frac{-\frac{1}{2} h_e^2}{\sigma_{zk}^2}\right] \qquad \text{(Eq. 1)}$$

and

$$\Sigma_{zk} = \left(\sigma_{zk}^2 + 0.5 D_z^2/\pi\right)^{1/2} \le \sqrt{3}\sigma_{zk} \qquad \text{(Eq. 2)}$$

where I = index identifying direction sector;

j = index identifying wind speed class;

k = index identifying atmospheric stability class;

$\frac{X}{Q}$ = average effluent concentration normalized by source strength at the specific downwind distance;

f = joint frequency distribution of wind direction, wind speed class, and atmospheric stability class;

x = distance from the release point to a receptor;

u = wind speed;

Σ_z = vertical plume spread with volumetric building wake correction for a release within the building wake cavity;

σ_z = vertical plume spread without volumetric building wake correction;

D_z = maximum adjacent building height either upwind or downwind of the release point (44.5 meters for ground-level releases); and

h_e = effective plume height;

The term Σ_{zk} given in Equations 1 and 2 is used for ground-level release ($h = 0$) within the building wake cavity. For an elevated release, no volumetric building wake correction needs to be considered, i.e., $\Sigma_{zk} = \sigma_{zk}$. For all building wake determinations, the reactor building was considered to be the dominating structure in the modification of air flows within the building complex.

Since the model does not directly consider the effects of spatial and temporal variation in airflow due to terrain, appropriate adjustments were made to the calculated X/Q values, using the default values of Regulatory Guide 1.111, Rev. 0.

APPENDIX C

DOSE CALCULATIONS

CONTENTS

	Page
LIQUID EFFLUENT DOSE CALCULATIONS	C1
GASEOUS EFFLUENT DOSE CALCULATIONS (EXCEPT CARBON-14)	C8
CARBON-14 GASEOUS EFFLUENT DOSE CALCULATIONS	C52
DOSE CALCULATION MODELS	C66

LIQUID EFFLUENT DOSE CALCULATIONS

Doses to the maximum individual and 0 to 50 - mile population resulting from the release of radioactive material in liquid effluents from Cooper Nuclear Station were calculated using the LADTAP II computer program. The LADTAP II program implements the radiological dose models of Regulatory Guide 1.109 for determining the radiation exposure to man from three principal exposure pathways in the aquatic environment -- potable water, aquatic foods, and recreational water use. Doses to both the maximum individual and 0 to 50 mile population are calculated as a function of age group and pathway for significant body organs, and are presented in Tables 1 - 6.

Assumptions and data sources used for input to the LADTAP II code are described in a separate section of this appendix (see page C66).

***No Liquid Releases 2012**

TABLE 1. Doses to Maximum Individual at the Site Boundary, Resulting From Exposure to Radioactivity Discharged in Liquid Effluents, January-June 2012 Cooper Nuclear Station

Period and Pathway	Dose to Individual, mrem							
	Skin	Bone	Liver	Total Body	Thyroid	Kidney	Lung	GI-LLI
1st Quarter								
Drinking Water		0.00 E+00	0.00 E+00	0.00 E+00	0.00 E+00	0.00 E+00	0.00 E+00	0.00 E+00
Shoreline	0.00 E+00	0.00 E+00	0.00 E+00	0.00 E+00	0.00 E+00	0.00 E+00	0.00 E+00	0.00 E+00
Totals	**0.00 E+00**	**0.00 E+00**	**0.00 E+00**	**0.00 E+00**	**0.00 E+00**	**0.00 E+00**	**0.00 E+00**	**0.00 E+00**
2nd Quarter								
Eating Fish		0.00 E+00	0.00 E+00	0.00 E+00	0.00 E+00	0.00 E+00	0.00 E+00	0.00 E+00
Drinking Water		0.00 E+00	0.00 E+00	0.00 E+00	0.00 E+00	0.00 E+00	0.00 E+00	0.00 E+00
Shoreline	0.00 E+00	0.00 E+00	0.00 E+00	0.00 E+00	0.00 E+00	0.00 E+00	0.00 E+00	0.00 E+00
Totals	**0.00 E+00**	**0.00 E+00**	**0.00 E+00**	**0.00 E+00**	**0.00 E+00**	**0.00 E+00**	**0.00 E+00**	**0.00 E+00**
Totals for 1st & 2nd Quarters	**0.00 E+00**	**0.00 E+00**	**0.00 E+00**	**0.00 E+00**	**0.00 E+00**	**0.00 E+00**	**0.00 E+00**	**0.00 E+00**

Calculated doses are based on the following periods of exposures: Fishing: April - November;
Drinking water and shoreline: January - December

TABLE 2. Doses to Maximum Individual at the Site Boundary, Resulting From Exposure to Radioactivity Discharged in Liquid Effluents, July-December 2012, Cooper Nuclear Station

Period and Pathway	Dose to Individual, mrem							
	Skin	Bone	Liver	Total Body	Thyroid	Kidney	Lung	GI-LLI
3rd Quarter								
Eating Fish		0.00 E+00	0.00 E+00	0.00 E+00	0.00 E+00	0.00 E+00	0.00 E+00	0.00 E+00
Drinking Water		0.00 E+00	0.00 E+00	0.00 E+00	0.00 E+00	0.00 E+00	0.00 E+00	0.00 E+00
Shoreline	0.00 E+00	0.00 E+00	0.00 E+00	0.00 E+00	0.00 E+00	0.00 E+00	0.00 E+00	0.00 E+00
Totals	**0.00 E+00**	**0.00 E+00**	**0.00 E+00**	**0.00 E+00**	**0.00 E+00**	**0.00 E+00**	**0.00 E+00**	**0.00 E+00**
4th Quarter								
Eating Fish		0.00 E+00	0.00 E+00	0.00 E+00	0.00 E+00	0.00 E+00	0.00 E+00	0.00 E+00
Drinking Water		0.00 E+00	0.00 E+00	0.00 E+00	0.00 E+00	0.00 E+00	0.00 E+00	0.00 E+00
Shoreline	0.00 E+00	0.00 E+00	0.00 E+00	0.00 E+00	0.00 E+00	0.00 E+00	0.00 E+00	0.00 E+00
Totals	**0.00 E+00**	**0.00 E+00**	**0.00 E+00**	**0.00 E+00**	**0.00 E+00**	**0.00 E+00**	**0.00 E+00**	**0.00 E+00**
Totals for 3rd & 4th Quarters	**0.00 E+00**	**0.00 E+00**	**0.00 E+00**	**0.00 E+00**	**0.00 E+00**	**0.00 E+00**	**0.00 E+00**	**0.00 E+00**

Calculated doses are based on the following periods of exposures: Fishing: April - November; Drinking water and shoreline: January - December

TABLE 3. Summary of Doses to Maximum Individual at the Site Boundary, Resulting from Exposure to Radioactivity Discharged in Liquid Effluents, January-December 2012, Cooper Nuclear Station

Period and Pathway	Dose to Individual, mrem							
	Skin	Bone	Liver	Total Body	Thyroid	Kidney	Lung	GI-LLI
1st Quarter	0.00 E+00	0.00 E+00	0.00 E+00	0.00 E+00	0.00 E+00	0.00 E+00	0.00 E+00	0.00 E+00
2nd Quarter	0.00 E+00	0.00 E+00	0.00 E+00	0.00 E+00	0.00 E+00	0.00 E+00	0.00 E+00	0.00 E+00
3rd Quarter	0.00 E+00	0.00 E+00	0.00 E+00	0.00 E+00	0.00 E+00	0.00 E+00	0.00 E+00	0.00 E+00
4th Quarter	0.00 E+00	0.00 E+00	0.00 E+00	0.00 E+00	0.00 E+00	0.00 E+00	0.00 E+00	0.00 E+00
Totals for 2012	**0.00 E+00**	**0.00 E+00**	**0.00 E+00**	**0.00 E+00**	**0.00 E+00**	**0.00 E+00**	**0.00 E+00**	**0.00 E+00**

TABLE 4. Doses to Population Within a 50-Mile Radius, Resulting From Exposure to Radioactivity Discharged in Liquid Effluents, January-June 2012, Cooper Nuclear Station

Period and Pathway	Dose to Population, manrem							
	Skin	Bone	Liver	Total Body	Thyroid	Kidney	Lung	GI-LLI
1st Quarter								
Drinking Water		0.00 E+00	0.00 E+00	0.00 E+00	0.00 E+00	0.00 E+00	0.00 E+00	0.00 E+00
Shoreline	0.00 E+00	0.00 E+00	0.00 E+00	0.00 E+00	0.00 E+00	0.00 E+00	0.00 E+00	0.00 E+00
Totals	**0.00 E+00**	**0.00 E+00**	**0.00 E+00**	**0.00 E+00**	**0.00 E+00**	**0.00 E+00**	**0.00 E+00**	**0.00 E+00**
2nd Quarter								
Eating Fish		0.00 E+00	0.00 E+00	0.00 E+00	0.00 E+00	0.00 E+00	0.00 E+00	0.00 E+00
Drinking Water		0.00 E+00	0.00 E+00	0.00 E+00	0.00 E+00	0.00 E+00	0.00 E+00	0.00 E+00
Shoreline	0.00 E+00	0.00 E+00	0.00 E+00	0.00 E+00	0.00 E+00	0.00 E+00	0.00 E+00	0.00 E+00
Swimming	0.00 E+00	0.00 E+00	0.00 E+00	0.00 E+00	0.00 E+00	0.00 E+00	0.00 E+00	0.00 E+00
Boating	0.00 E+00	0.00 E+00	0.00 E+00	0.00 E+00	0.00 E+00	0.00 E+00	0.00 E+00	0.00 E+00
Totals	**0.00 E+00**	**0.00 E+00**	**0.00 E+00**	**0.00 E+00**	**0.00 E+00**	**0.00 E+00**	**0.00 E+00**	**0.00 E+00**
Totals for 1st & 2nd Quarters	**0.00 E+00**	**0.00 E+00**	**0.00 E+00**	**0.00 E+00**	**0.00 E+00**	**0.00 E+00**	**0.00 E+00**	**0.00 E+00**

Calculated doses are based on the following periods of exposures: Fishing and Boating: April - November; Drinking water and shoreline: January - December; Swimming: June - September. Exposure from drinking water is calculated for the city of St. Joseph, Missouri, nearest public water intake from the Missouri River, 84 miles downstream.

TABLE 5. Doses to Population Within a 50-Mile Radius, Resulting From Exposure to Radioactivity Discharged in Liquid Effluents, July-December 2012, Cooper Nuclear Station

Period and Pathway	Dose to Population, manrem							
	Skin	Bone	Liver	Total Body	Thyroid	Kidney	Lung	GI-LLI
3rd Quarter								
Eating Fish		0.00 E+00	0.00 E+00	0.00 E+00	0.00 E+00	0.00 E+00	0.00 E+00	0.00 E+00
Drinking Water		0.00 E+00	0.00 E+00	0.00 E+00	0.00 E+00	0.00 E+00	0.00 E+00	0.00 E+00
Shoreline	0.00 E+00	0.00 E+00	0.00 E+00	0.00 E+00	0.00 E+00	0.00 E+00	0.00 E+00	0.00 E+00
Swimming	0.00 E+00	0.00 E+00	0.00 E+00	0.00 E+00	0.00 E+00	0.00 E+00	0.00 E+00	0.00 E+00
Boating	0.00 E+00	0.00 E+00	0.00 E+00	0.00 E+00	0.00 E+00	0.00 E+00	0.00 E+00	0.00 E+00
Totals	**0.00 E+00**	**0.00 E+00**	**0.00 E+00**	**0.00 E+00**	**0.00 E+00**	**0.00 E+00**	**0.00 E+00**	**0.00 E+00**
4th Quarter								
Eating Fish		0.00 E+00	0.00 E+00	0.00 E+00	0.00 E+00	0.00 E+00	0.00 E+00	0.00 E+00
Drinking Water		0.00 E+00	0.00 E+00	0.00 E+00	0.00 E+00	0.00 E+00	0.00 E+00	0.00 E+00
Shoreline	0.00 E+00	0.00 E+00	0.00 E+00	0.00 E+00	0.00 E+00	0.00 E+00	0.00 E+00	0.00 E+00
Boating	0.00 E+00	0.00 E+00	0.00 E+00	0.00 E+00	0.00 E+00	0.00 E+00	0.00 E+00	0.00 E+00
Totals	**0.00 E+00**	**0.00 E+00**	**0.00 E+00**	**0.00 E+00**	**0.00 E+00**	**0.00 E+00**	**0.00 E+00**	**0.00 E+00**
Totals for 3rd & 4th Quarters	**0.00 E+00**	**0.00 E+00**	**0.00 E+00**	**0.00 E+00**	**0.00 E+00**	**0.00 E+00**	**0.00 E+00**	**0.00 E+00**

Calculated doses are based on the following periods of exposures: Fishing and Boating: April - November; Drinking water and shoreline: January - December; Swimming: June - September. Exposure from drinking water is calculated for the city of St. Joseph, Missouri, nearest public water intake from the Missouri River, 84 miles downstream.

TABLE 6. Summary of Doses to Population Within a 50-Mile Radius, Resulting from Exposure to Radioactivity Discharged in Liquid Effluents, January-December 2012 Cooper Nuclear Station

Period and Pathway	Dose to Population, manrem							
	Skin	Bone	Liver	Total Body	Thyroid	Kidney	Lung	GI-LLI
1st Quarter	0.00 E+00	0.00 E+00	0.00 E+00	0.00 E+00	0.00 E+00	0.00 E+00	0.00 E+00	0.00 E+00
2nd Quarter	0.00 E+00	0.00 E+00	0.00 E+00	0.00 E+00	0.00 E+00	0.00 E+00	0.00 E+00	0.00 E+00
3rd Quarter	0.00 E+00	0.00 E+00	0.00 E+00	0.00 E+00	0.00 E+00	0.00 E+00	0.00 E+00	0.00 E+00
4th Quarter	0.00 E+00	0.00 E+00	0.00 E+00	0.00 E+00	0.00 E+00	0.00 E+00	0.00 E+00	0.00 E+00
Totals for 2012	**0.00 E+00**	**0.00 E+00**	**0.00 E+00**	**0.00 E+00**	**0.00 E+00**	**0.00 E+00**	**0.00 E+00**	**0.00 E+00**

GASEOUS EFFLUENT DOSE CALCULATIONS (EXCEPT CARBON-14)

Doses to the maximum individual and 0 to 50 mile population resulting from the release of radioactive material in gaseous effluents from the Cooper Nuclear Station were calculated using the GASPAR computer code. Four sites were selected for individual dose calculations: the site boundary, the nearest residence, the nearest garden and the nearest cow. GASPAR implements the radiological dose models of Regulatory Guide 1.109 for determining the radiation exposure to man from four principal atmospheric exposure pathways: plume, ground, inhalation, and ingestion. Doses to the maximum individual and the population are calculated as a function of age group and pathway for significant body organs.

Tables 1 through 7 present maximum individual doses. Population doses are given in Tables 8 through 14.

Assumptions and data used for input to the GASPAR code are described in a separate section of this appendix (see page C66).

TABLE 1. DOSES TO MAXIMUM INDIVIDUAL (MREM), JANUARY-MARCH 2012

SPECIAL LOCATION NO. 1 A Site Boundary
AT .69 MILES NNW

ANNUAL BETA AIR DOSE = 1.84E-06 MILLRADS
ANNUAL GAMMA AIR DOSE = 3.40E-06 MILLRADS

PATHWAY	T.BODY	GI-TRACT	BONE	LIVER	KIDNEY	THYROID	LUNG	SKIN
PLUME	2.27E-06	2.27E-06	2.27E-06	2.27E-06	2.27E-06	2.27E-06	2.29E-06	4.26E-06
GROUND	2.09E-03	2.09E-03	2.09E-03	2.09E-03	2.09E-03	2.09E-03	2.09E-03	2.46E-03
VEGET								
ADULT	4.49E-05	2.70E-04	1.55E-05	3.71E-05	1.10E-05	7.63E-04	2.12E-06	0.00E+00
TEEN	6.14E-05	2.88E-04	2.53E-05	5.81E-05	1.72E-05	1.03E-03	3.97E-06	0.00E+00
CHILD	1.10E-04	1.88E-04	6.03E-05	9.50E-05	2.78E-05	1.97E-03	6.04E-06	0.00E+00
MEAT								
ADULT	9.39E-06	7.12E-05	1.17E-06	5.41E-06	6.37E-07	2.05E-05	1.73E-07	0.00E+00
TEEN	7.07E-06	3.83E-05	9.69E-07	4.25E-06	5.16E-07	1.49E-05	1.64E-07	0.00E+00
CHILD	1.06E-05	1.93E-05	1.78E-06	5.22E-06	6.54E-07	2.24E-05	1.92E-07	0.00E+00
COW MILK								
ADULT	1.13E-05	1.63E-05	1.07E-05	1.56E-05	7.45E-06	5.73E-04	1.46E-06	0.00E+00
TEEN	1.28E-05	1.93E-05	1.95E-05	2.75E-05	1.32E-05	9.06E-04	3.03E-06	0.00E+00
CHILD	1.54E-05	1.29E-05	4.69E-05	4.74E-05	2.20E-05	1.79E-03	4.65E-06	0.00E+00
INFANT	2.18E-05	1.14E-05	7.76E-05	9.54E-05	3.65E-05	4.36E-03	8.42E-06	0.00E+00
GOATMILK								
ADULT	2.69E-05	3.22E-06	3.00E-05	4.12E-05	1.69E-05	6.87E-04	4.39E-06	0.00E+00
TEEN	2.63E-05	3.98E-06	5.43E-05	7.26E-05	2.99E-05	1.09E-03	9.08E-06	0.00E+00
CHILD	2.21E-05	2.84E-06	1.31E-04	1.26E-04	4.96E-05	2.15E-03	1.40E-05	0.00E+00
INFANT	2.48E-05	2.63E-06	2.12E-04	2.49E-04	8.12E-05	5.23E-03	2.53E-05	0.00E+00
INHAL								
ADULT	7.50E-07	7.14E-06	4.62E-07	9.88E-07	6.22E-07	7.09E-05	1.47E-04	0.00E+00
TEEN	8.47E-07	6.51E-06	6.49E-07	1.33E-06	8.55E-07	8.91E-05	2.15E-04	0.00E+00
CHILD	8.24E-07	2.45E-06	8.79E-07	1.25E-06	7.98E-07	1.03E-04	1.74E-04	0.00E+00
INFANT	4.53E-07	8.28E-07	5.97E-07	9.46E-07	5.15E-07	9.47E-05	1.11E-04	0.00E+00

TABLE 1. DOSES TO MAXIMUM INDIVIDUAL (MREM), JANUARY-MARCH 2012 (Continued)

SPECIAL LOCATION NO. 2 A Site Boundary
AT .67 MILES N

ANNUAL BETA AIR DOSE = 3.31E-06 MILLRADS
ANNUAL GAMMA AIR DOSE = 6.11E-06 MILLRADS

PATHWAY	T.BODY	GI-TRACT	BONE	LIVER	KIDNEY	THYROID	LUNG	SKIN
PLUME	4.09E-06	4.09E-06	4.09E-06	4.09E-06	4.09E-06	4.09E-06	4.12E-06	7.66E-06
GROUND	3.48E-03	3.48E-03	3.48E-03	3.48E-03	3.48E-03	3.48E-03	3.48E-03	4.09E-03
VEGET								
ADULT	7.46E-05	4.48E-04	2.59E-05	6.16E-05	1.83E-05	1.28E-03	3.52E-06	0.00E+00
TEEN	1.02E-04	4.77E-04	4.23E-05	9.64E-05	2.86E-05	1.73E-03	6.59E-06	0.00E+00
CHILD	1.82E-04	3.12E-04	1.01E-04	1.58E-04	4.64E-05	3.31E-03	1.00E-05	0.00E+00
MEAT								
ADULT	1.56E-05	1.18E-04	1.94E-06	8.98E-06	1.06E-06	3.45E-05	2.87E-07	0.00E+00
TEEN	1.17E-05	6.36E-05	1.61E-06	7.05E-06	8.59E-07	2.50E-05	2.72E-07	0.00E+00
CHILD	1.75E-05	3.21E-05	2.96E-06	8.67E-06	1.09E-06	3.77E-05	3.19E-07	0.00E+00
COW MILK								
ADULT	1.88E-05	2.71E-05	1.78E-05	2.59E-05	1.24E-05	9.62E-04	2.43E-06	0.00E+00
TEEN	2.13E-05	3.21E-05	3.24E-05	4.57E-05	2.21E-05	1.52E-03	5.02E-06	0.00E+00
CHILD	2.56E-05	2.14E-05	7.80E-05	7.88E-05	3.66E-05	3.01E-03	7.72E-06	0.00E+00
INFANT	3.64E-05	1.89E-05	1.29E-04	1.59E-04	6.09E-05	7.32E-03	1.40E-05	0.00E+00
GOATMILK								
ADULT	4.47E-05	5.36E-06	4.98E-05	6.84E-05	2.81E-05	1.15E-03	7.29E-06	0.00E+00
TEEN	4.37E-05	6.62E-06	9.03E-05	1.21E-04	4.97E-05	1.83E-03	1.51E-05	0.00E+00
CHILD	3.67E-05	4.73E-06	2.18E-04	2.09E-04	8.26E-05	3.62E-03	2.32E-05	0.00E+00
INFANT	4.12E-05	4.39E-06	3.53E-04	4.14E-04	1.35E-04	8.79E-03	4.19E-05	0.00E+00
INHAL								
ADULT	1.06E-06	1.01E-05	6.52E-07	1.40E-06	8.74E-07	9.93E-05	2.08E-04	0.00E+00
TEEN	1.20E-06	9.22E-06	9.15E-07	1.88E-06	1.20E-06	1.25E-04	3.04E-04	0.00E+00
CHILD	1.16E-06	3.48E-06	1.24E-06	1.77E-06	1.12E-06	1.45E-04	2.47E-04	0.00E+00
INFANT	6.39E-07	1.18E-06	8.41E-07	1.33E-06	7.23E-07	1.33E-04	1.57E-04	0.00E+00

TABLE 1. DOSES TO MAXIMUM INDIVIDUAL (MREM), JANUARY-MARCH 2012 (Continued)

SPECIAL LOCATION NO. 3 A Nearest Resident
AT .90 MILES NW

ANNUAL BETA AIR DOSE = 6.44E-06 MILLRADS
ANNUAL GAMMA AIR DOSE = 1.19E-05 MILLRADS

PATHWAY	T.BODY	GI-TRACT	BONE	LIVER	KIDNEY	THYROID	LUNG	SKIN
PLUME	7.95E-06	7.95E-06	7.95E-06	7.95E-06	7.95E-06	7.95E-06	8.01E-06	1.49E-05
GROUND	8.57E-04	8.57E-04	8.57E-04	8.57E-04	8.57E-04	8.57E-04	8.57E-04	1.01E-03
VEGET								
ADULT	1.84E-05	1.11E-04	6.58E-06	1.53E-05	4.62E-06	3.35E-04	8.69E-07	0.00E+00
TEEN	2.52E-05	1.18E-04	1.08E-05	2.39E-05	7.22E-06	4.51E-04	1.63E-06	0.00E+00
CHILD	4.50E-05	7.69E-05	2.56E-05	3.91E-05	1.17E-05	8.65E-04	2.48E-06	0.00E+00
MEAT								
ADULT	3.84E-06	2.91E-05	4.81E-07	2.22E-06	2.64E-07	9.00E-06	7.10E-08	0.00E+00
TEEN	2.90E-06	1.57E-05	4.00E-07	1.74E-06	2.14E-07	6.52E-06	6.72E-08	0.00E+00
CHILD	4.33E-06	7.92E-06	7.36E-07	2.14E-06	2.71E-07	9.85E-06	7.89E-08	0.00E+00
COW MILK								
ADULT	4.68E-06	6.71E-06	4.45E-06	6.45E-06	3.15E-06	2.51E-04	6.01E-07	0.00E+00
TEEN	5.30E-06	7.93E-06	8.06E-06	1.14E-05	5.58E-06	3.98E-04	1.24E-06	0.00E+00
CHILD	6.39E-06	5.29E-06	1.94E-05	1.96E-05	9.27E-06	7.88E-04	1.91E-06	0.00E+00
INFANT	9.12E-06	4.67E-06	3.22E-05	3.95E-05	1.54E-05	1.91E-03	3.45E-06	0.00E+00
GOATMILK								
ADULT	1.11E-05	1.34E-06	1.24E-05	1.69E-05	7.02E-06	3.02E-04	1.80E-06	0.00E+00
TEEN	1.08E-05	1.66E-06	2.24E-05	2.99E-05	1.24E-05	4.78E-04	3.72E-06	0.00E+00
CHILD	9.15E-06	1.19E-06	5.40E-05	5.18E-05	2.07E-05	9.45E-04	5.72E-06	0.00E+00
INFANT	1.04E-05	1.10E-06	8.76E-05	1.03E-04	3.38E-05	2.30E-03	1.04E-05	0.00E+00
INHAL								
ADULT	1.95E-07	1.85E-06	1.22E-07	2.59E-07	1.67E-07	1.91E-05	3.80E-05	0.00E+00
TEEN	2.21E-07	1.69E-06	1.71E-07	3.49E-07	2.29E-07	2.40E-05	5.55E-05	0.00E+00
CHILD	2.15E-07	7.10E-07	2.32E-07	3.28E-07	2.14E-07	2.79E-05	4.50E-05	0.00E+00
INFANT	1.19E-07	2.82E-07	1.58E-07	2.49E-07	1.38E-07	2.56E-05	2.87E-05	0.00E+00

TABLE 1. DOSES TO MAXIMUM INDIVIDUAL (MREM), JANUARY-MARCH 2012 (Continued)

SPECIAL LOCATION NO. 4 A Nearest Cow
AT 3.50 MILES NNW

ANNUAL BETA AIR DOSE = 1.02E-06 MILLRADS
ANNUAL GAMMA AIR DOSE = 1.52E-06 MILLRADS

PATHWAY	T.BODY	GI-TRACT	BONE	LIVER	KIDNEY	THYROID	LUNG	SKIN
PLUME	1.02E-06	1.02E-06	1.02E-06	1.02E-06	1.02E-06	1.02E-06	1.02E-06	2.08E-06
GROUND	4.19E-05	4.19E-05	4.19E-05	4.19E-05	4.19E-05	4.19E-05	4.19E-05	4.93E-05
VEGET								
ADULT	9.06E-07	5.42E-06	3.38E-07	7.52E-07	2.34E-07	1.78E-05	4.26E-08	0.00E+00
TEEN	1.24E-06	5.76E-06	5.52E-07	1.18E-06	3.66E-07	2.40E-05	7.99E-08	0.00E+00
CHILD	2.21E-06	3.77E-06	1.32E-06	1.93E-06	5.92E-07	4.60E-05	1.22E-07	0.00E+00
MEAT								
ADULT	1.88E-07	1.43E-06	2.38E-08	1.09E-07	1.32E-08	4.79E-07	3.48E-09	0.00E+00
TEEN	1.42E-07	7.67E-07	1.98E-08	8.54E-08	1.07E-08	3.47E-07	3.30E-09	0.00E+00
CHILD	2.12E-07	3.87E-07	3.64E-08	1.05E-07	1.35E-08	5.24E-07	3.87E-09	0.00E+00
COW MILK								
ADULT	2.31E-07	3.29E-07	2.21E-07	3.20E-07	1.60E-07	1.34E-05	2.95E-08	0.00E+00
TEEN	2.63E-07	3.89E-07	4.01E-07	5.63E-07	2.84E-07	2.12E-05	6.09E-08	0.00E+00
CHILD	3.19E-07	2.60E-07	9.66E-07	9.72E-07	4.71E-07	4.19E-05	9.36E-08	0.00E+00
INFANT	4.58E-07	2.30E-07	1.61E-06	1.96E-06	7.86E-07	1.02E-04	1.69E-07	0.00E+00
GOATMILK								
ADULT	5.46E-07	6.70E-08	6.10E-07	8.35E-07	3.51E-07	1.61E-05	8.84E-08	0.00E+00
TEEN	5.36E-07	8.30E-08	1.11E-06	1.47E-06	6.22E-07	2.54E-05	1.83E-07	0.00E+00
CHILD	4.56E-07	5.95E-08	2.67E-06	2.55E-06	1.03E-06	5.03E-05	2.81E-07	0.00E+00
INFANT	5.21E-07	5.53E-08	4.33E-06	5.06E-06	1.70E-06	1.22E-04	5.08E-07	0.00E+00
INHAL								
ADULT	2.35E-08	2.17E-07	1.52E-08	3.16E-08	2.18E-08	2.57E-06	4.45E-06	0.00E+00
TEEN	2.67E-08	2.01E-07	2.14E-08	4.27E-08	2.99E-08	3.23E-06	6.49E-06	0.00E+00
CHILD	2.61E-08	1.08E-07	2.90E-08	4.02E-08	2.79E-08	3.75E-06	5.26E-06	0.00E+00
INFANT	1.45E-08	5.51E-08	1.99E-08	3.08E-08	1.81E-08	3.44E-06	3.36E-06	0.00E+00

TABLE 1. DOSES TO MAXIMUM INDIVIDUAL (MREM), JANUARY-MARCH 2012 (Continued)

SPECIAL LOCATION NO. 5 A Nearest Garden
AT 2.80 MILES NNW

ANNUAL BETA AIR DOSE = 1.15E-06 MILLRADS
ANNUAL GAMMA AIR DOSE = 1.74E-06 MILLRADS

PATHWAY	T.BODY	GI-TRACT	BONE	LIVER	KIDNEY	THYROID	LUNG	SKIN
PLUME	1.16E-06	1.16E-06	1.16E-06	1.16E-06	1.16E-06	1.16E-06	1.17E-06	2.36E-06
GROUND	7.15E-05	7.15E-05	7.15E-05	7.15E-05	7.15E-05	7.15E-05	7.15E-05	8.41E-05
VEGET								
ADULT	1.54E-06	9.23E-06	5.72E-07	1.28E-06	3.97E-07	3.00E-05	7.26E-08	0.00E+00
TEEN	2.11E-06	9.82E-06	9.34E-07	2.00E-06	6.20E-07	4.05E-05	1.36E-07	0.00E+00
CHILD	3.77E-06	6.42E-06	2.23E-06	3.28E-06	1.00E-06	7.75E-05	2.07E-07	0.00E+00
MEAT								
ADULT	3.21E-07	2.43E-06	4.05E-08	1.85E-07	2.24E-08	8.07E-07	5.93E-09	0.00E+00
TEEN	2.42E-07	1.31E-06	3.37E-08	1.45E-07	1.81E-08	5.85E-07	5.61E-09	0.00E+00
CHILD	3.61E-07	6.60E-07	6.20E-08	1.79E-07	2.30E-08	8.83E-07	6.60E-09	0.00E+00
COW MILK								
ADULT	3.93E-07	5.61E-07	3.76E-07	5.44E-07	2.71E-07	2.25E-05	5.02E-08	0.00E+00
TEEN	4.47E-07	6.63E-07	6.81E-07	9.58E-07	4.81E-07	3.57E-05	1.04E-07	0.00E+00
CHILD	5.42E-07	4.42E-07	1.64E-06	1.65E-06	7.99E-07	7.06E-05	1.59E-07	0.00E+00
INFANT	7.77E-07	3.91E-07	2.73E-06	3.34E-06	1.33E-06	1.72E-04	2.89E-07	0.00E+00
GOATMILK								
ADULT	9.29E-07	1.14E-07	1.04E-06	1.42E-06	5.97E-07	2.71E-05	1.51E-07	0.00E+00
TEEN	9.12E-07	1.41E-07	1.88E-06	2.51E-06	1.06E-06	4.28E-05	3.11E-07	0.00E+00
CHILD	7.75E-07	1.01E-07	4.54E-06	4.35E-06	1.76E-06	8.48E-05	4.78E-07	0.00E+00
INFANT	8.85E-07	9.40E-08	7.37E-06	8.62E-06	2.88E-06	2.06E-04	8.66E-07	0.00E+00
INHAL								
ADULT	3.55E-08	3.30E-07	2.28E-08	4.76E-08	3.22E-08	3.78E-06	6.78E-06	0.00E+00
TEEN	4.03E-08	3.05E-07	3.20E-08	6.43E-08	4.42E-08	4.75E-06	9.90E-06	0.00E+00
CHILD	3.93E-08	1.50E-07	4.34E-08	6.05E-08	4.13E-08	5.51E-06	8.02E-06	0.00E+00
INFANT	2.19E-08	7.08E-08	2.97E-08	4.62E-08	2.67E-08	5.05E-06	5.12E-06	0.00E+00

TABLE 2. DOSES TO MAXIMUM INDIVIDUAL (MREM), APRIL-JUNE 2012

SPECIAL LOCATION NO. 1 A Site Boundary
AT .67 MILES N

ANNUAL BETA AIR DOSE = 5.47E-06 MILLRADS
ANNUAL GAMMA AIR DOSE = 1.12E-05 MILLRADS

PATHWAY	T.BODY	GI-TRACT	BONE	LIVER	KIDNEY	THYROID	LUNG	SKIN
PLUME	7.49E-06	7.49E-06	7.49E-06	7.49E-06	7.49E-06	7.49E-06	7.55E-06	1.34E-05
GROUND	4.64E-03	4.64E-03	4.64E-03	4.64E-03	4.64E-03	4.64E-03	4.64E-03	5.46E-03
VEGET								
ADULT	1.16E-04	5.89E-04	5.51E-05	1.06E-04	3.42E-05	2.05E-03	7.59E-06	0.00E+00
TEEN	1.50E-04	6.27E-04	9.02E-05	1.67E-04	5.37E-05	2.76E-03	1.42E-05	0.00E+00
CHILD	2.53E-04	4.10E-04	2.15E-04	2.77E-04	8.76E-05	5.29E-03	2.16E-05	0.00E+00
MEAT								
ADULT	2.21E-05	1.57E-04	4.15E-06	1.40E-05	2.16E-06	5.51E-05	6.20E-07	0.00E+00
TEEN	1.62E-05	8.44E-05	3.45E-06	1.11E-05	1.75E-06	3.99E-05	5.87E-07	0.00E+00
CHILD	2.36E-05	4.26E-05	6.35E-06	1.38E-05	2.22E-06	6.02E-05	6.90E-07	0.00E+00
COW MILK								
ADULT	3.72E-05	3.65E-05	3.74E-05	5.31E-05	2.40E-05	1.54E-03	5.25E-06	0.00E+00
TEEN	4.00E-05	4.32E-05	6.78E-05	9.36E-05	4.25E-05	2.44E-03	1.08E-05	0.00E+00
CHILD	4.34E-05	2.89E-05	1.63E-04	1.62E-04	7.06E-05	4.82E-03	1.67E-05	0.00E+00
INFANT	5.85E-05	2.56E-05	2.68E-04	3.24E-04	1.17E-04	1.17E-02	3.02E-05	0.00E+00
GOATMILK								
ADULT	9.51E-05	8.46E-06	1.06E-04	1.45E-04	5.72E-05	1.85E-03	1.57E-05	0.00E+00
TEEN	9.20E-05	1.05E-05	1.92E-04	2.57E-04	1.01E-04	2.92E-03	3.25E-05	0.00E+00
CHILD	7.46E-05	7.63E-06	4.64E-04	4.45E-04	1.68E-04	5.79E-03	5.00E-05	0.00E+00
INFANT	8.07E-05	7.15E-06	7.49E-04	8.77E-04	2.74E-04	1.41E-02	9.05E-05	0.00E+00
INHAL								
ADULT	1.00E-06	7.64E-06	7.34E-07	1.34E-06	8.78E-07	9.34E-05	1.57E-04	0.00E+00
TEEN	1.07E-06	6.99E-06	1.03E-06	1.82E-06	1.21E-06	1.18E-04	2.29E-04	0.00E+00
CHILD	9.74E-07	2.72E-06	1.40E-06	1.73E-06	1.13E-06	1.37E-04	1.86E-04	0.00E+00
INFANT	5.34E-07	9.65E-07	9.32E-07	1.33E-06	7.30E-07	1.26E-04	1.18E-04	0.00E+00

TABLE 2. DOSES TO MAXIMUM INDIVIDUAL (MREM), APRIL-JUNE 2012 (Continued)

SPECIAL LOCATION NO. 2 A Site Boundary
AT .60 MILES NNE

ANNUAL BETA AIR DOSE = 1.46E-06 MILLRADS
ANNUAL GAMMA AIR DOSE = 2.99E-06 MILLRADS

PATHWAY	T.BODY	GI-TRACT	BONE	LIVER	KIDNEY	THYROID	LUNG	SKIN
PLUME	2.00E-06	2.00E-06	2.00E-06	2.00E-06	2.00E-06	2.00E-06	2.01E-06	3.59E-06
GROUND	2.01E-03	2.01E-03	2.01E-03	2.01E-03	2.01E-03	2.01E-03	2.01E-03	2.37E-03
VEGET								
ADULT	5.02E-05	2.55E-04	2.34E-05	4.58E-05	1.46E-05	8.59E-04	3.28E-06	0.00E+00
TEEN	6.48E-05	2.71E-04	3.82E-05	7.21E-05	2.30E-05	1.16E-03	6.14E-06	0.00E+00
CHILD	1.09E-04	1.78E-04	9.11E-05	1.20E-04	3.75E-05	2.22E-03	9.34E-06	0.00E+00
MEAT								
ADULT	9.56E-06	6.79E-05	1.79E-06	6.07E-06	9.30E-07	2.31E-05	2.68E-07	0.00E+00
TEEN	7.01E-06	3.66E-05	1.48E-06	4.78E-06	7.53E-07	1.67E-05	2.53E-07	0.00E+00
CHILD	1.02E-05	1.85E-05	2.73E-06	5.95E-06	9.56E-07	2.52E-05	2.98E-07	0.00E+00
COW MILK								
ADULT	1.60E-05	1.58E-05	1.61E-05	2.29E-05	1.03E-05	6.45E-04	2.27E-06	0.00E+00
TEEN	1.72E-05	1.87E-05	2.92E-05	4.03E-05	1.82E-05	1.02E-03	4.68E-06	0.00E+00
CHILD	1.87E-05	1.25E-05	7.03E-05	6.97E-05	3.02E-05	2.02E-03	7.20E-06	0.00E+00
INFANT	2.51E-05	1.11E-05	1.15E-04	1.39E-04	4.99E-05	4.91E-03	1.30E-05	0.00E+00
GOATMILK								
ADULT	4.10E-05	3.63E-06	4.57E-05	6.27E-05	2.46E-05	7.74E-04	6.80E-06	0.00E+00
TEEN	3.96E-05	4.52E-06	8.29E-05	1.11E-04	4.35E-05	1.23E-03	1.40E-05	0.00E+00
CHILD	3.21E-05	3.27E-06	2.00E-04	1.92E-04	7.22E-05	2.43E-03	2.16E-05	0.00E+00
INFANT	3.46E-05	3.06E-06	3.23E-04	3.78E-04	1.18E-04	5.90E-03	3.91E-05	0.00E+00
INHAL								
ADULT	6.85E-07	5.22E-06	5.03E-07	9.18E-07	6.04E-07	6.44E-05	1.07E-04	0.00E+00
TEEN	7.30E-07	4.77E-06	7.06E-07	1.24E-06	8.31E-07	8.12E-05	1.57E-04	0.00E+00
CHILD	6.67E-07	1.81E-06	9.56E-07	1.18E-06	7.77E-07	9.47E-05	1.27E-04	0.00E+00
INFANT	3.66E-07	6.21E-07	6.39E-07	9.10E-07	5.02E-07	8.68E-05	8.10E-05	0.00E+00

TABLE 2. DOSES TO MAXIMUM INDIVIDUAL (MREM), APRIL-JUNE 2012 (Continued)

SPECIAL LOCATION NO. 3 A Nearest Resident
AT .90 MILES NW

ANNUAL BETA AIR DOSE = 6.25E-06 MILLRADS
ANNUAL GAMMA AIR DOSE = 1.28E-05 MILLRADS

PATHWAY	T.BODY	GI-TRACT	BONE	LIVER	KIDNEY	THYROID	LUNG	SKIN
PLUME	8.57E-06	8.57E-06	8.57E-06	8.57E-06	8.57E-06	8.57E-06	8.63E-06	1.54E-05
GROUND	1.29E-03	1.29E-03	1.29E-03	1.29E-03	1.29E-03	1.29E-03	1.29E-03	1.52E-03
VEGET								
ADULT	3.23E-05	1.64E-04	1.56E-05	2.96E-05	9.58E-06	5.83E-04	2.11E-06	0.00E+00
TEEN	4.17E-05	1.74E-04	2.55E-05	4.66E-05	1.51E-05	7.85E-04	3.96E-06	0.00E+00
CHILD	7.03E-05	1.14E-04	6.07E-05	7.73E-05	2.46E-05	1.50E-03	6.03E-06	0.00E+00
MEAT								
ADULT	6.14E-06	4.36E-05	1.16E-06	3.90E-06	6.04E-07	1.57E-05	1.73E-07	0.00E+00
TEEN	4.50E-06	2.34E-05	9.62E-07	3.08E-06	4.89E-07	1.13E-05	1.63E-07	0.00E+00
CHILD	6.57E-06	1.18E-05	1.77E-06	3.83E-06	6.21E-07	1.71E-05	1.92E-07	0.00E+00
COW MILK								
ADULT	1.04E-05	1.02E-05	1.04E-05	1.48E-05	6.73E-06	4.38E-04	1.46E-06	0.00E+00
TEEN	1.12E-05	1.20E-05	1.89E-05	2.61E-05	1.19E-05	6.93E-04	3.02E-06	0.00E+00
CHILD	1.21E-05	8.05E-06	4.57E-05	4.52E-05	1.98E-05	1.37E-03	4.64E-06	0.00E+00
INFANT	1.64E-05	7.13E-06	7.50E-05	9.03E-05	3.28E-05	3.34E-03	8.40E-06	0.00E+00
GOATMILK								
ADULT	2.65E-05	2.37E-06	2.96E-05	4.06E-05	1.60E-05	5.26E-04	4.39E-06	0.00E+00
TEEN	2.56E-05	2.95E-06	5.37E-05	7.15E-05	2.83E-05	8.32E-04	9.06E-06	0.00E+00
CHILD	2.09E-05	2.14E-06	1.29E-04	1.24E-04	4.70E-05	1.65E-03	1.39E-05	0.00E+00
INFANT	2.26E-05	2.00E-06	2.09E-04	2.45E-04	7.67E-05	4.00E-03	2.52E-05	0.00E+00
INHAL								
ADULT	2.10E-07	1.59E-06	1.56E-07	2.83E-07	1.89E-07	2.03E-05	3.27E-05	0.00E+00
TEEN	2.24E-07	1.47E-06	2.18E-07	3.84E-07	2.60E-07	2.55E-05	4.78E-05	0.00E+00
CHILD	2.05E-07	6.74E-07	2.96E-07	3.65E-07	2.43E-07	2.98E-05	3.87E-05	0.00E+00
INFANT	1.13E-07	2.96E-07	1.98E-07	2.81E-07	1.57E-07	2.73E-05	2.47E-05	0.00E+00

TABLE 2. DOSES TO MAXIMUM INDIVIDUAL (MREM), APRIL-JUNE 2012 (Continued)

SPECIAL LOCATION NO. 4 A Nearest Cow
AT 3.50 MILES NNW

ANNUAL BETA AIR DOSE = 2.87E-06 MILLRADS
ANNUAL GAMMA AIR DOSE = 5.87E-06 MILLRADS

PATHWAY	T.BODY	GI-TRACT	BONE	LIVER	KIDNEY	THYROID	LUNG	SKIN
PLUME	3.93E-06	3.93E-06	3.93E-06	3.93E-06	3.93E-06	3.93E-06	3.95E-06	7.04E-06
GROUND	5.68E-05	5.68E-05	5.68E-05	5.68E-05	5.68E-05	5.68E-05	5.68E-05	6.68E-05
VEGET								
ADULT	1.43E-06	7.21E-06	7.17E-07	1.31E-06	4.32E-07	2.73E-05	9.38E-08	0.00E+00
TEEN	1.85E-06	7.68E-06	1.17E-06	2.07E-06	6.80E-07	3.67E-05	1.76E-07	0.00E+00
CHILD	3.11E-06	5.02E-06	2.80E-06	3.43E-06	1.11E-06	7.04E-05	2.67E-07	0.00E+00
MEAT								
ADULT	2.71E-07	1.92E-06	5.17E-08	1.72E-07	2.70E-08	7.33E-07	7.66E-09	0.00E+00
TEEN	1.98E-07	1.03E-06	4.29E-08	1.36E-07	2.19E-08	5.31E-07	7.25E-09	0.00E+00
CHILD	2.89E-07	5.21E-07	7.91E-08	1.69E-07	2.77E-08	8.01E-07	8.52E-09	0.00E+00
COW MILK								
ADULT	4.62E-07	4.48E-07	4.67E-07	6.61E-07	3.04E-07	2.05E-05	6.49E-08	0.00E+00
TEEN	4.98E-07	5.31E-07	8.46E-07	1.16E-06	5.39E-07	3.24E-05	1.34E-07	0.00E+00
CHILD	5.43E-07	3.56E-07	2.04E-06	2.01E-06	8.96E-07	6.42E-05	2.06E-07	0.00E+00
INFANT	7.36E-07	3.15E-07	3.36E-06	4.03E-06	1.48E-06	1.56E-04	3.73E-07	0.00E+00
GOATMILK								
ADULT	1.18E-06	1.06E-07	1.32E-06	1.80E-06	7.16E-07	2.46E-05	1.95E-07	0.00E+00
TEEN	1.14E-06	1.32E-07	2.39E-06	3.18E-06	1.27E-06	3.89E-05	4.02E-07	0.00E+00
CHILD	9.32E-07	9.60E-08	5.76E-06	5.51E-06	2.10E-06	7.70E-05	6.18E-07	0.00E+00
INFANT	1.02E-06	9.01E-08	9.32E-06	1.09E-05	3.44E-06	1.87E-04	1.12E-06	0.00E+00
INHAL								
ADULT	1.76E-08	1.30E-07	1.36E-08	2.41E-08	1.71E-08	1.92E-06	2.65E-06	0.00E+00
TEEN	1.89E-08	1.25E-07	1.90E-08	3.27E-08	2.36E-08	2.42E-06	3.88E-06	0.00E+00
CHILD	1.74E-08	1.04E-07	2.58E-08	3.11E-08	2.21E-08	2.81E-06	3.14E-06	0.00E+00
INFANT	9.66E-09	6.72E-08	1.74E-08	2.42E-08	1.43E-08	2.58E-06	2.01E-06	0.00E+00

TABLE 2. DOSES TO MAXIMUM INDIVIDUAL (MREM), APRIL-JUNE 2012 (Continued)

SPECIAL LOCATION NO. 5 A Nearest Garden
AT 1.30 MILES SW

ANNUAL BETA AIR DOSE = 2.87E-06 MILLRADS
ANNUAL GAMMA AIR DOSE = 5.87E-06 MILLRADS

PATHWAY	T.BODY	GI-TRACT	BONE	LIVER	KIDNEY	THYROID	LUNG	SKIN
PLUME	3.93E-06	3.93E-06	3.93E-06	3.93E-06	3.93E-06	3.93E-06	3.95E-06	7.04E-06
GROUND	1.70E-04	1.70E-04	1.70E-04	1.70E-04	1.70E-04	1.70E-04	1.70E-04	2.00E-04
VEGET								
ADULT	4.28E-06	2.16E-05	2.10E-06	3.92E-06	1.28E-06	7.95E-05	2.80E-07	0.00E+00
TEEN	5.52E-06	2.30E-05	3.43E-06	6.18E-06	2.01E-06	1.07E-04	5.25E-07	0.00E+00
CHILD	9.30E-06	1.51E-05	8.19E-06	1.03E-05	3.28E-06	2.05E-04	7.99E-07	0.00E+00
MEAT								
ADULT	8.11E-07	5.75E-06	1.54E-07	5.16E-07	8.03E-08	2.14E-06	2.29E-08	0.00E+00
TEEN	5.95E-07	3.10E-06	1.28E-07	4.07E-07	6.51E-08	1.55E-06	2.17E-08	0.00E+00
CHILD	8.67E-07	1.56E-06	2.36E-07	5.07E-07	8.26E-08	2.34E-06	2.54E-08	0.00E+00
COW MILK								
ADULT	1.38E-06	1.34E-06	1.39E-06	1.97E-06	9.01E-07	5.98E-05	1.94E-07	0.00E+00
TEEN	1.48E-06	1.59E-06	2.52E-06	3.47E-06	1.60E-06	9.46E-05	4.00E-07	0.00E+00
CHILD	1.62E-06	1.07E-06	6.07E-06	6.00E-06	2.65E-06	1.87E-04	6.15E-07	0.00E+00
INFANT	2.19E-06	9.44E-07	9.98E-06	1.20E-05	4.39E-06	4.55E-04	1.11E-06	0.00E+00
GOATMILK								
ADULT	3.52E-06	3.15E-07	3.93E-06	5.38E-06	2.13E-06	7.17E-05	5.81E-07	0.00E+00
TEEN	3.40E-06	3.94E-07	7.13E-06	9.49E-06	3.77E-06	1.14E-04	1.20E-06	0.00E+00
CHILD	2.77E-06	2.86E-07	1.72E-05	1.65E-05	6.26E-06	2.25E-04	1.85E-06	0.00E+00
INFANT	3.02E-06	2.68E-07	2.78E-05	3.25E-05	1.02E-05	5.46E-04	3.34E-06	0.00E+00
INHAL								
ADULT	3.75E-08	2.82E-07	2.82E-08	5.08E-08	3.48E-08	3.79E-06	5.76E-06	0.00E+00
TEEN	4.01E-08	2.63E-07	3.96E-08	6.89E-08	4.79E-08	4.78E-06	8.42E-06	0.00E+00
CHILD	3.67E-08	1.56E-07	5.36E-08	6.56E-08	4.49E-08	5.57E-06	6.82E-06	0.00E+00
INFANT	2.03E-08	8.45E-08	3.60E-08	5.07E-08	2.90E-08	5.11E-06	4.35E-06	0.00E+00

TABLE 3. DOSES TO MAXIMUM INDIVIDUAL (MREM), JANUARY-JUNE 2012

SPECIAL LOCATION NO. 1 A Site Boundary
AT .69 MILES NNW

ANNUAL BETA AIR DOSE = 6.98E-06 MILLRADS
ANNUAL GAMMA AIR DOSE = 1.34E-05 MILLRADS

PATHWAY	T.BODY	GI-TRACT	BONE	LIVER	KIDNEY	THYROID	LUNG	SKIN
PLUME	8.97E-06	8.97E-06	8.97E-06	8.97E-06	8.97E-06	8.97E-06	9.03E-06	1.65E-05
GROUND	4.85E-03	4.85E-03	4.85E-03	4.85E-03	4.85E-03	4.85E-03	4.85E-03	5.70E-03
VEGET								
ADULT	1.13E-04	6.20E-04	4.70E-05	9.89E-05	3.07E-05	1.96E-03	6.48E-06	0.00E+00
TEEN	1.50E-04	6.60E-04	7.68E-05	1.55E-04	4.83E-05	2.64E-03	1.21E-05	0.00E+00
CHILD	2.59E-04	4.31E-04	1.83E-04	2.56E-04	7.85E-05	5.05E-03	1.85E-05	0.00E+00
MEAT								
ADULT	2.24E-05	1.64E-04	3.55E-06	1.36E-05	1.88E-06	5.26E-05	5.29E-07	0.00E+00
TEEN	1.67E-05	8.84E-05	2.95E-06	1.07E-05	1.53E-06	3.81E-05	5.01E-07	0.00E+00
CHILD	2.46E-05	4.46E-05	5.43E-06	1.33E-05	1.93E-06	5.75E-05	5.89E-07	0.00E+00
COW MILK								
ADULT	3.28E-05	3.80E-05	3.22E-05	4.62E-05	2.13E-05	1.47E-03	4.48E-06	0.00E+00
TEEN	3.60E-05	4.49E-05	5.85E-05	8.14E-05	3.78E-05	2.33E-03	9.26E-06	0.00E+00
CHILD	4.07E-05	3.00E-05	1.41E-04	1.41E-04	6.28E-05	4.61E-03	1.42E-05	0.00E+00
INFANT	5.60E-05	2.65E-05	2.32E-04	2.82E-04	1.04E-04	1.12E-02	2.58E-05	0.00E+00
GOATMILK								
ADULT	8.16E-05	8.17E-06	9.10E-05	1.25E-04	4.98E-05	1.76E-03	1.34E-05	0.00E+00
TEEN	7.92E-05	1.01E-05	1.65E-04	2.20E-04	8.82E-05	2.79E-03	2.78E-05	0.00E+00
CHILD	6.51E-05	7.30E-06	3.98E-04	3.82E-04	1.46E-04	5.53E-03	4.27E-05	0.00E+00
INFANT	7.13E-05	6.81E-06	6.43E-04	7.54E-04	2.39E-04	1.34E-02	7.73E-05	0.00E+00
INHAL								
ADULT	1.35E-06	1.14E-05	9.26E-07	1.80E-06	1.16E-06	1.27E-04	2.35E-04	0.00E+00
TEEN	1.48E-06	1.04E-05	1.30E-06	2.44E-06	1.59E-06	1.60E-04	3.43E-04	0.00E+00
CHILD	1.39E-06	4.00E-06	1.76E-06	2.31E-06	1.49E-06	1.86E-04	2.78E-04	0.00E+00
INFANT	7.63E-07	1.39E-06	1.18E-06	1.76E-06	9.62E-07	1.70E-04	1.77E-04	0.00E+00

TABLE 3. DOSES TO MAXIMUM INDIVIDUAL (MREM), JANUARY-JUNE 2012 (Continued)

SPECIAL LOCATION NO. 2 A Site Boundary
AT .67 MILES N

ANNUAL BETA AIR DOSE = 1.01E-05 MILLRADS
ANNUAL GAMMA AIR DOSE = 1.94E-05 MILLRADS

PATHWAY	T.BODY	GI-TRACT	BONE	LIVER	KIDNEY	THYROID	LUNG	SKIN
PLUME	1.29E-05	1.29E-05	1.29E-05	1.29E-05	1.29E-05	1.29E-05	1.30E-05	2.39E-05
GROUND	8.02E-03	8.02E-03	8.02E-03	8.02E-03	8.02E-03	8.02E-03	8.02E-03	9.43E-03
VEGET								
ADULT	1.87E-04	1.03E-03	7.82E-05	1.64E-04	5.11E-05	3.28E-03	1.07E-05	0.00E+00
TEEN	2.48E-04	1.09E-03	1.28E-04	2.57E-04	8.02E-05	4.42E-03	2.01E-05	0.00E+00
CHILD	4.29E-04	7.13E-04	3.05E-04	4.24E-04	1.30E-04	8.47E-03	3.06E-05	0.00E+00
MEAT								
ADULT	3.71E-05	2.72E-04	5.88E-06	2.25E-05	3.12E-06	8.82E-05	8.76E-07	0.00E+00
TEEN	2.75E-05	1.46E-04	4.88E-06	1.78E-05	2.53E-06	6.39E-05	8.29E-07	0.00E+00
CHILD	4.06E-05	7.38E-05	9.00E-06	2.20E-05	3.21E-06	9.64E-05	9.74E-07	0.00E+00
COW MILK								
ADULT	5.43E-05	6.28E-05	5.34E-05	7.66E-05	3.54E-05	2.46E-03	7.41E-06	0.00E+00
TEEN	5.96E-05	7.43E-05	9.69E-05	1.35E-04	6.28E-05	3.90E-03	1.53E-05	0.00E+00
CHILD	6.75E-05	4.97E-05	2.34E-04	2.33E-04	1.04E-04	7.72E-03	2.36E-05	0.00E+00
INFANT	9.30E-05	4.39E-05	3.84E-04	4.67E-04	1.73E-04	1.88E-02	4.26E-05	0.00E+00
GOATMILK								
ADULT	1.35E-04	1.36E-05	1.51E-04	2.07E-04	8.26E-05	2.96E-03	2.22E-05	0.00E+00
TEEN	1.31E-04	1.68E-05	2.73E-04	3.65E-04	1.46E-04	4.68E-03	4.60E-05	0.00E+00
CHILD	1.08E-04	1.21E-05	6.58E-04	6.32E-04	2.43E-04	9.26E-03	7.07E-05	0.00E+00
INFANT	1.18E-04	1.13E-05	1.06E-03	1.25E-03	3.97E-04	2.25E-02	1.28E-04	0.00E+00
INHAL								
ADULT	2.05E-06	1.72E-05	1.41E-06	2.74E-06	1.79E-06	1.97E-04	3.54E-04	0.00E+00
TEEN	2.24E-06	1.57E-05	1.98E-06	3.70E-06	2.46E-06	2.48E-04	5.17E-04	0.00E+00
CHILD	2.11E-06	6.02E-06	2.68E-06	3.50E-06	2.30E-06	2.89E-04	4.19E-04	0.00E+00
INFANT	1.16E-06	2.09E-06	1.80E-06	2.68E-06	1.48E-06	2.65E-04	2.67E-04	0.00E+00

TABLE 3. DOSES TO MAXIMUM INDIVIDUAL (MREM), JANUARY-JUNE 2012 (Continued)

SPECIAL LOCATION NO. 3 A Nearest Resident
AT .90 MILES NW

ANNUAL BETA AIR DOSE = 1.37E-05 MILLRADS
ANNUAL GAMMA AIR DOSE = 2.63E-05 MILLRADS

PATHWAY	T.BODY	GI-TRACT	BONE	LIVER	KIDNEY	THYROID	LUNG	SKIN
PLUME	1.76E-05	1.76E-05	1.76E-05	1.76E-05	1.76E-05	1.76E-05	1.77E-05	3.24E-05
GROUND	2.08E-03	2.08E-03	2.08E-03	2.08E-03	2.08E-03	2.08E-03	2.08E-03	2.45E-03
VEGET								
ADULT	4.86E-05	2.66E-04	2.08E-05	4.27E-05	1.35E-05	8.87E-04	2.79E-06	0.00E+00
TEEN	6.44E-05	2.83E-04	3.40E-05	6.70E-05	2.11E-05	1.19E-03	5.23E-06	0.00E+00
CHILD	1.11E-04	1.85E-04	8.10E-05	1.11E-04	3.43E-05	2.29E-03	7.95E-06	0.00E+00
MEAT								
ADULT	9.62E-06	7.04E-05	1.53E-06	5.86E-06	8.16E-07	2.38E-05	2.28E-07	0.00E+00
TEEN	7.15E-06	3.79E-05	1.27E-06	4.61E-06	6.62E-07	1.73E-05	2.16E-07	0.00E+00
CHILD	1.05E-05	1.91E-05	2.35E-06	5.71E-06	8.39E-07	2.61E-05	2.53E-07	0.00E+00
COW MILK								
ADULT	1.42E-05	1.63E-05	1.40E-05	2.00E-05	9.35E-06	6.66E-04	1.93E-06	0.00E+00
TEEN	1.56E-05	1.93E-05	2.53E-05	3.52E-05	1.66E-05	1.05E-03	3.98E-06	0.00E+00
CHILD	1.77E-05	1.29E-05	6.11E-05	6.08E-05	2.75E-05	2.09E-03	6.12E-06	0.00E+00
INFANT	2.44E-05	1.14E-05	1.01E-04	1.22E-04	4.57E-05	5.07E-03	1.11E-05	0.00E+00
GOATMILK								
ADULT	3.52E-05	3.55E-06	3.93E-05	5.38E-05	2.17E-05	7.99E-04	5.78E-06	0.00E+00
TEEN	3.42E-05	4.42E-06	7.12E-05	9.50E-05	3.83E-05	1.26E-03	1.20E-05	0.00E+00
CHILD	2.82E-05	3.18E-06	1.72E-04	1.65E-04	6.37E-05	2.50E-03	1.84E-05	0.00E+00
INFANT	3.11E-05	2.97E-06	2.78E-04	3.25E-04	1.04E-04	6.09E-03	3.32E-05	0.00E+00
INHAL								
ADULT	4.11E-07	3.45E-06	2.84E-07	5.49E-07	3.60E-07	3.97E-05	7.08E-05	0.00E+00
TEEN	4.50E-07	3.17E-06	3.98E-07	7.43E-07	4.95E-07	4.99E-05	1.03E-04	0.00E+00
CHILD	4.23E-07	1.39E-06	5.39E-07	7.03E-07	4.63E-07	5.81E-05	8.38E-05	0.00E+00
INFANT	2.33E-07	5.81E-07	3.63E-07	5.38E-07	2.99E-07	5.33E-05	5.35E-05	0.00E+00

TABLE 3. DOSES TO MAXIMUM INDIVIDUAL (MREM), JANUARY-JUNE 2012 (Continued)

SPECIAL LOCATION NO. 4 A Nearest Cow
AT 3.50 MILES NNW

ANNUAL BETA AIR DOSE = 7.20E-06 MILLRADS
ANNUAL GAMMA AIR DOSE = 1.38E-05 MILLRADS

PATHWAY	T.BODY	GI-TRACT	BONE	LIVER	KIDNEY	THYROID	LUNG	SKIN
PLUME	9.24E-06	9.24E-06	9.24E-06	9.24E-06	9.24E-06	9.24E-06	9.31E-06	1.70E-05
GROUND	9.71E-05	9.71E-05	9.71E-05	9.71E-05	9.71E-05	9.71E-05	9.71E-05	1.14E-04
VEGET								
ADULT	2.28E-06	1.24E-05	1.02E-06	2.01E-06	6.47E-07	4.45E-05	1.31E-07	0.00E+00
TEEN	3.02E-06	1.32E-05	1.66E-06	3.15E-06	1.02E-06	6.00E-05	2.45E-07	0.00E+00
CHILD	5.22E-06	8.65E-06	3.97E-06	5.20E-06	1.65E-06	1.15E-04	3.73E-07	0.00E+00
MEAT								
ADULT	4.50E-07	3.29E-06	7.26E-08	2.74E-07	3.87E-08	1.20E-06	1.07E-08	0.00E+00
TEEN	3.34E-07	1.77E-06	6.03E-08	2.16E-07	3.14E-08	8.67E-07	1.01E-08	0.00E+00
CHILD	4.92E-07	8.94E-07	1.11E-07	2.67E-07	3.98E-08	1.31E-06	1.19E-08	0.00E+00
COW MILK								
ADULT	6.69E-07	7.65E-07	6.62E-07	9.45E-07	4.50E-07	3.34E-05	9.05E-08	0.00E+00
TEEN	7.37E-07	9.05E-07	1.20E-06	1.67E-06	7.99E-07	5.29E-05	1.87E-07	0.00E+00
CHILD	8.40E-07	6.05E-07	2.90E-06	2.88E-06	1.33E-06	1.05E-04	2.88E-07	0.00E+00
INFANT	1.17E-06	5.36E-07	4.78E-06	5.78E-06	2.20E-06	2.55E-04	5.20E-07	0.00E+00
GOATMILK								
ADULT	1.66E-06	1.69E-07	1.85E-06	2.54E-06	1.03E-06	4.01E-05	2.72E-07	0.00E+00
TEEN	1.61E-06	2.11E-07	3.36E-06	4.47E-06	1.83E-06	6.35E-05	5.61E-07	0.00E+00
CHILD	1.34E-06	1.52E-07	8.10E-06	7.76E-06	3.03E-06	1.26E-04	8.63E-07	0.00E+00
INFANT	1.49E-06	1.42E-07	1.31E-05	1.53E-05	4.96E-06	3.06E-04	1.56E-06	0.00E+00
INHAL								
ADULT	4.28E-08	3.50E-07	3.07E-08	5.82E-08	4.08E-08	4.65E-06	7.15E-06	0.00E+00
TEEN	4.71E-08	3.31E-07	4.31E-08	7.88E-08	5.61E-08	5.86E-06	1.04E-05	0.00E+00
CHILD	4.45E-08	2.31E-07	5.84E-08	7.47E-08	5.25E-08	6.81E-06	8.46E-06	0.00E+00
INFANT	2.48E-08	1.38E-07	3.97E-08	5.78E-08	3.40E-08	6.24E-06	5.40E-06	0.00E+00

TABLE 3. DOSES TO MAXIMUM INDIVIDUAL (MREM), JANUARY-JUNE 2012 (Continued)

SPECIAL LOCATION NO. 5 A Nearest Garden
AT 2.80 MILES NNW

ANNUAL BETA AIR DOSE = 8.64E-06 MILLRADS
ANNUAL GAMMA AIR DOSE = 1.66E-05 MILLRADS

PATHWAY	T.BODY	GI-TRACT	BONE	LIVER	KIDNEY	THYROID	LUNG	SKIN
PLUME	1.11E-05	1.11E-05	1.11E-05	1.11E-05	1.11E-05	1.11E-05	1.12E-05	2.04E-05
GROUND	1.59E-04	1.59E-04	1.59E-04	1.59E-04	1.59E-04	1.59E-04	1.59E-04	1.87E-04
VEGET								
ADULT	3.72E-06	2.03E-05	1.65E-06	3.28E-06	1.06E-06	7.25E-05	2.14E-07	0.00E+00
TEEN	4.93E-06	2.16E-05	2.71E-06	5.14E-06	1.66E-06	9.76E-05	4.00E-07	0.00E+00
CHILD	8.52E-06	1.41E-05	6.45E-06	8.49E-06	2.69E-06	1.87E-04	6.09E-07	0.00E+00
MEAT								
ADULT	7.35E-07	5.37E-06	1.18E-07	4.48E-07	6.32E-08	1.95E-06	1.75E-08	0.00E+00
TEEN	5.45E-07	2.89E-06	9.83E-08	3.52E-07	5.12E-08	1.41E-06	1.65E-08	0.00E+00
CHILD	8.04E-07	1.46E-06	1.81E-07	4.36E-07	6.49E-08	2.13E-06	1.94E-08	0.00E+00
COW MILK								
ADULT	1.09E-06	1.25E-06	1.08E-06	1.54E-06	7.34E-07	5.44E-05	1.48E-07	0.00E+00
TEEN	1.20E-06	1.48E-06	1.96E-06	2.72E-06	1.30E-06	8.62E-05	3.05E-07	0.00E+00
CHILD	1.37E-06	9.88E-07	4.72E-06	4.69E-06	2.16E-06	1.71E-04	4.69E-07	0.00E+00
INFANT	1.90E-06	8.75E-07	7.80E-06	9.43E-06	3.59E-06	4.15E-04	8.49E-07	0.00E+00
GOATMILK								
ADULT	2.70E-06	2.76E-07	3.02E-06	4.14E-06	1.68E-06	6.53E-05	4.43E-07	0.00E+00
TEEN	2.63E-06	3.43E-07	5.48E-06	7.30E-06	2.98E-06	1.03E-04	9.16E-07	0.00E+00
CHILD	2.18E-06	2.48E-07	1.32E-05	1.27E-05	4.94E-06	2.05E-04	1.41E-06	0.00E+00
INFANT	2.43E-06	2.32E-07	2.14E-05	2.50E-05	8.08E-06	4.98E-04	2.55E-06	0.00E+00
INHAL								
ADULT	6.51E-08	5.35E-07	4.62E-08	8.81E-08	6.09E-08	6.90E-06	1.09E-05	0.00E+00
TEEN	7.15E-08	5.01E-07	6.49E-08	1.19E-07	8.38E-08	8.68E-06	1.60E-05	0.00E+00
CHILD	6.75E-08	3.06E-07	8.79E-08	1.13E-07	7.83E-08	1.01E-05	1.30E-05	0.00E+00
INFANT	3.75E-08	1.70E-07	5.97E-08	8.72E-08	5.07E-08	9.26E-06	8.27E-06	0.00E+00

TABLE 4. DOSES TO MAXIMUM INDIVIDUAL (MREM), JULY-SEPTEMBER 2012

SPECIAL LOCATION NO. 1 A Site Boundary
AT .69 MILES NNW

ANNUAL BETA AIR DOSE = 6.12E-06 MILLRADS
ANNUAL GAMMA AIR DOSE = 1.25E-05 MILLRADS

PATHWAY	T.BODY	GI-TRACT	BONE	LIVER	KIDNEY	THYROID	LUNG	SKIN
PLUME	8.36E-06	8.36E-06	8.36E-06	8.36E-06	8.36E-06	8.36E-06	8.42E-06	1.50E-05
GROUND	6.78E-03	6.78E-03	6.78E-03	6.78E-03	6.78E-03	6.78E-03	6.78E-03	7.97E-03
VEGET								
ADULT	1.24E-04	8.99E-04	4.31E-04	7.41E-05	3.87E-05	6.51E-03	2.11E-08	0.00E+00
TEEN	1.92E-04	9.59E-04	5.98E-04	1.13E-04	5.82E-05	8.75E-03	2.83E-08	0.00E+00
CHILD	3.83E-04	6.30E-04	1.24E-03	1.78E-04	9.26E-05	1.68E-02	4.35E-08	0.00E+00
MEAT								
ADULT	2.90E-05	2.36E-04	6.13E-06	1.56E-05	2.66E-06	1.74E-04	7.54E-10	0.00E+00
TEEN	2.30E-05	1.27E-04	4.34E-06	1.21E-05	2.03E-06	1.26E-04	7.13E-10	0.00E+00
CHILD	3.56E-05	6.40E-05	6.97E-06	1.44E-05	2.40E-06	1.90E-04	8.38E-10	0.00E+00
COW MILK								
ADULT	1.97E-05	6.29E-05	3.27E-05	2.85E-05	3.35E-05	4.93E-03	1.10E-07	0.00E+00
TEEN	3.35E-05	7.47E-05	5.31E-05	4.94E-05	5.86E-05	7.82E-03	1.94E-07	0.00E+00
CHILD	6.53E-05	5.05E-05	1.17E-04	8.13E-05	9.56E-05	1.55E-02	3.96E-07	0.00E+00
INFANT	1.08E-04	7.83E-05	1.82E-04	1.77E-04	1.60E-04	3.77E-02	6.91E-07	0.00E+00
GOATMILK								
ADULT	1.26E-05	1.39E-05	5.25E-05	2.04E-05	3.29E-05	5.92E-03	3.06E-08	0.00E+00
TEEN	2.09E-05	1.76E-05	8.39E-05	3.61E-05	5.86E-05	9.38E-03	5.93E-08	0.00E+00
CHILD	3.93E-05	1.32E-05	1.83E-04	6.23E-05	9.72E-05	1.86E-02	1.03E-07	0.00E+00
INFANT	7.08E-05	1.65E-05	2.66E-04	1.50E-04	1.68E-04	4.53E-02	1.83E-07	0.00E+00
INHAL								
ADULT	3.54E-06	8.26E-05	7.88E-06	5.90E-06	7.93E-06	9.32E-04	5.65E-04	0.00E+00
TEEN	4.71E-06	1.20E-04	9.88E-06	8.04E-06	1.09E-05	1.19E-03	8.30E-04	0.00E+00
CHILD	5.37E-06	2.21E-04	1.23E-05	7.79E-06	1.03E-05	1.43E-03	6.76E-04	0.00E+00
INFANT	3.37E-06	1.61E-04	7.21E-06	6.69E-06	6.80E-06	1.32E-03	4.43E-04	0.00E+00

TABLE 4. DOSES TO MAXIMUM INDIVIDUAL (MREM), JULY-SEPTEMBER 2012 (Continued)

SPECIAL LOCATION NO. 2 A Site Boundary
AT .67 MILES N

ANNUAL BETA AIR DOSE = 1.17E-05 MILLRADS
ANNUAL GAMMA AIR DOSE = 2.40E-05 MILLRADS

PATHWAY	T.BODY	GI-TRACT	BONE	LIVER	KIDNEY	THYROID	LUNG	SKIN
PLUME	1.60E-05	1.60E-05	1.60E-05	1.60E-05	1.60E-05	1.60E-05	1.61E-05	2.88E-05
GROUND	1.24E-02	1.24E-02	1.24E-02	1.24E-02	1.24E-02	1.24E-02	1.24E-02	1.46E-02
VEGET								
ADULT	2.27E-04	1.64E-03	7.87E-04	1.36E-04	7.10E-05	1.19E-02	4.59E-08	0.00E+00
TEEN	3.50E-04	1.75E-03	1.09E-03	2.07E-04	1.07E-04	1.60E-02	6.53E-08	0.00E+00
CHILD	6.99E-04	1.15E-03	2.28E-03	3.25E-04	1.70E-04	3.07E-02	1.00E-07	0.00E+00
MEAT								
ADULT	5.30E-05	4.30E-04	1.12E-05	2.85E-05	4.87E-06	3.19E-04	1.97E-09	0.00E+00
TEEN	4.19E-05	2.31E-04	7.94E-06	2.21E-05	3.72E-06	2.31E-04	1.86E-09	0.00E+00
CHILD	6.51E-05	1.17E-04	1.27E-05	2.62E-05	4.40E-06	3.49E-04	2.19E-09	0.00E+00
COW MILK								
ADULT	3.61E-05	1.15E-04	5.99E-05	5.22E-05	6.14E-05	9.04E-03	2.06E-07	0.00E+00
TEEN	6.12E-05	1.36E-04	9.72E-05	9.04E-05	1.07E-04	1.43E-02	3.64E-07	0.00E+00
CHILD	1.19E-04	9.23E-05	2.14E-04	1.49E-04	1.75E-04	2.85E-02	7.39E-07	0.00E+00
INFANT	1.97E-04	1.43E-04	3.34E-04	3.25E-04	2.93E-04	6.92E-02	1.29E-06	0.00E+00
GOATMILK								
ADULT	2.31E-05	2.54E-05	9.61E-05	3.75E-05	6.04E-05	1.09E-02	7.09E-08	0.00E+00
TEEN	3.84E-05	3.23E-05	1.54E-04	6.63E-05	1.07E-04	1.72E-02	1.39E-07	0.00E+00
CHILD	7.21E-05	2.41E-05	3.36E-04	1.15E-04	1.78E-04	3.41E-02	2.36E-07	0.00E+00
INFANT	1.30E-04	3.03E-05	4.88E-04	2.75E-04	3.09E-04	8.30E-02	4.21E-07	0.00E+00
INHAL								
ADULT	5.96E-06	1.39E-04	1.33E-05	9.91E-06	1.33E-05	1.56E-03	9.53E-04	0.00E+00
TEEN	7.93E-06	2.03E-04	1.66E-05	1.35E-05	1.83E-05	2.00E-03	1.40E-03	0.00E+00
CHILD	9.03E-06	3.74E-04	2.07E-05	1.31E-05	1.73E-05	2.40E-03	1.14E-03	0.00E+00
INFANT	5.67E-06	2.71E-04	1.21E-05	1.12E-05	1.14E-05	2.21E-03	7.48E-04	0.00E+00

TABLE 4. DOSES TO MAXIMUM INDIVIDUAL (MREM), JULY-SEPTEMBER 2012 (Continued)

SPECIAL LOCATION NO. 3 A Nearest Resident
AT .90 MILES NW

ANNUAL BETA AIR DOSE = 1.22E-05 MILLRADS
ANNUAL GAMMA AIR DOSE = 2.50E-05 MILLRADS

PATHWAY	T.BODY	GI-TRACT	BONE	LIVER	KIDNEY	THYROID	LUNG	SKIN
PLUME	1.67E-05	1.67E-05	1.67E-05	1.67E-05	1.67E-05	1.67E-05	1.68E-05	3.01E-05
GROUND	2.48E-03	2.48E-03	2.48E-03	2.48E-03	2.48E-03	2.48E-03	2.48E-03	2.91E-03
VEGET								
ADULT	4.55E-05	3.29E-04	1.58E-04	2.73E-05	1.44E-05	2.41E-03	1.42E-08	0.00E+00
TEEN	7.02E-05	3.51E-04	2.20E-04	4.16E-05	2.16E-05	3.25E-03	2.24E-08	0.00E+00
CHILD	1.40E-04	2.30E-04	4.57E-04	6.54E-05	3.44E-05	6.22E-03	3.43E-08	0.00E+00
MEAT								
ADULT	1.06E-05	8.61E-05	2.25E-06	5.71E-06	9.79E-07	6.45E-05	8.03E-10	0.00E+00
TEEN	8.39E-06	4.63E-05	1.60E-06	4.43E-06	7.47E-07	4.67E-05	7.60E-10	0.00E+00
CHILD	1.30E-05	2.34E-05	2.56E-06	5.26E-06	8.85E-07	7.05E-05	8.92E-10	0.00E+00
COW MILK								
ADULT	7.27E-06	2.30E-05	1.21E-05	1.05E-05	1.24E-05	1.83E-03	4.46E-08	0.00E+00
TEEN	1.23E-05	2.73E-05	1.96E-05	1.83E-05	2.17E-05	2.90E-03	7.99E-08	0.00E+00
CHILD	2.40E-05	1.85E-05	4.33E-05	3.01E-05	3.54E-05	5.76E-03	1.59E-07	0.00E+00
INFANT	3.96E-05	2.86E-05	6.75E-05	6.57E-05	5.92E-05	1.40E-02	2.78E-07	0.00E+00
GOATMILK								
ADULT	4.73E-06	5.11E-06	1.94E-05	7.67E-06	1.22E-05	2.20E-03	2.46E-08	0.00E+00
TEEN	7.80E-06	6.50E-06	3.10E-05	1.36E-05	2.18E-05	3.48E-03	4.93E-08	0.00E+00
CHILD	1.46E-05	4.86E-06	6.79E-05	2.34E-05	3.62E-05	6.91E-03	8.01E-08	0.00E+00
INFANT	2.63E-05	6.09E-06	9.89E-05	5.62E-05	6.26E-05	1.68E-02	1.44E-07	0.00E+00
INHAL								
ADULT	6.68E-07	1.55E-05	1.48E-06	1.12E-06	1.50E-06	1.76E-04	1.06E-04	0.00E+00
TEEN	8.89E-07	2.26E-05	1.86E-06	1.52E-06	2.07E-06	2.26E-04	1.56E-04	0.00E+00
CHILD	1.01E-06	4.19E-05	2.32E-06	1.47E-06	1.95E-06	2.71E-04	1.27E-04	0.00E+00
INFANT	6.36E-07	3.05E-05	1.36E-06	1.27E-06	1.29E-06	2.49E-04	8.32E-05	0.00E+00

TABLE 4. DOSES TO MAXIMUM INDIVIDUAL (MREM), JULY-SEPTEMBER 2012 (Continued)

SPECIAL LOCATION NO. 4 A Nearest Cow
AT 3.50 MILES NNW

ANNUAL BETA AIR DOSE = 9.18E-06 MILLRADS
ANNUAL GAMMA AIR DOSE = 1.87E-05 MILLRADS

PATHWAY	T.BODY	GI-TRACT	BONE	LIVER	KIDNEY	THYROID	LUNG	SKIN
PLUME	1.25E-05	1.25E-05	1.25E-05	1.25E-05	1.25E-05	1.25E-05	1.26E-05	2.25E-05
GROUND	1.30E-04	1.30E-04	1.30E-04	1.30E-04	1.30E-04	1.30E-04	1.30E-04	1.53E-04
VEGET								
ADULT	2.40E-06	1.73E-05	8.34E-06	1.44E-06	7.57E-07	1.27E-04	9.83E-10	0.00E+00
TEEN	3.70E-06	1.85E-05	1.16E-05	2.19E-06	1.14E-06	1.71E-04	1.65E-09	0.00E+00
CHILD	7.38E-06	1.21E-05	2.42E-05	3.45E-06	1.81E-06	3.28E-04	2.51E-09	0.00E+00
MEAT								
ADULT	5.58E-07	4.53E-06	1.19E-07	3.01E-07	5.16E-08	3.40E-06	6.35E-11	0.00E+00
TEEN	4.42E-07	2.44E-06	8.42E-08	2.33E-07	3.94E-08	2.47E-06	6.01E-11	0.00E+00
CHILD	6.86E-07	1.23E-06	1.35E-07	2.77E-07	4.67E-08	3.72E-06	7.06E-11	0.00E+00
COW MILK								
ADULT	3.84E-07	1.21E-06	6.36E-07	5.55E-07	6.53E-07	9.64E-05	2.31E-09	0.00E+00
TEEN	6.50E-07	1.44E-06	1.04E-06	9.62E-07	1.14E-06	1.53E-04	4.20E-09	0.00E+00
CHILD	1.26E-06	9.70E-07	2.29E-06	1.58E-06	1.86E-06	3.03E-04	8.14E-09	0.00E+00
INFANT	2.08E-06	1.50E-06	3.56E-06	3.46E-06	3.11E-06	7.36E-04	1.43E-08	0.00E+00
GOATMILK								
ADULT	2.52E-07	2.68E-07	1.03E-06	4.08E-07	6.45E-07	1.16E-04	1.81E-09	0.00E+00
TEEN	4.14E-07	3.40E-07	1.64E-06	7.21E-07	1.15E-06	1.83E-04	3.67E-09	0.00E+00
CHILD	7.71E-07	2.54E-07	3.60E-06	1.25E-06	1.90E-06	3.64E-04	5.84E-09	0.00E+00
INFANT	1.38E-06	3.18E-07	5.24E-06	2.98E-06	3.30E-06	8.84E-04	1.05E-08	0.00E+00
INHAL								
ADULT	1.11E-07	2.19E-06	2.47E-07	1.86E-07	2.51E-07	3.02E-05	1.72E-05	0.00E+00
TEEN	1.48E-07	2.86E-06	3.10E-07	2.53E-07	3.46E-07	3.87E-05	2.52E-05	0.00E+00
CHILD	1.68E-07	3.45E-06	3.86E-07	2.46E-07	3.26E-07	4.63E-05	2.05E-05	0.00E+00
INFANT	1.06E-07	2.22E-06	2.28E-07	2.12E-07	2.15E-07	4.25E-05	1.33E-05	0.00E+00

TABLE 4. DOSES TO MAXIMUM INDIVIDUAL (MREM), JULY-SEPTEMBER 2012 (Continued)

SPECIAL LOCATION NO. 5 A Nearest Garden
AT 1.30 MILES SW

ANNUAL BETA AIR DOSE = 6.63E-06 MILLRADS
ANNUAL GAMMA AIR DOSE = 1.35E-05 MILLRADS

PATHWAY	T.BODY	GI-TRACT	BONE	LIVER	KIDNEY	THYROID	LUNG	SKIN
PLUME	9.06E-06	9.06E-06	9.06E-06	9.06E-06	9.06E-06	9.06E-06	9.12E-06	1.63E-05
GROUND	4.96E-04	4.96E-04	4.96E-04	4.96E-04	4.96E-04	4.96E-04	4.96E-04	5.83E-04
VEGET								
ADULT	9.11E-06	6.57E-05	3.16E-05	5.45E-06	2.87E-06	4.83E-04	2.87E-09	0.00E+00
TEEN	1.40E-05	7.01E-05	4.39E-05	8.31E-06	4.32E-06	6.49E-04	4.56E-09	0.00E+00
CHILD	2.80E-05	4.61E-05	9.15E-05	1.31E-05	6.87E-06	1.24E-03	6.96E-09	0.00E+00
MEAT								
ADULT	2.12E-06	1.72E-05	4.50E-07	1.14E-06	1.96E-07	1.29E-05	1.63E-10	0.00E+00
TEEN	1.68E-06	9.26E-06	3.19E-07	8.86E-07	1.49E-07	9.35E-06	1.55E-10	0.00E+00
CHILD	2.60E-06	4.68E-06	5.13E-07	1.05E-06	1.77E-07	1.41E-05	1.82E-10	0.00E+00
COW MILK								
ADULT	1.46E-06	4.60E-06	2.41E-06	2.11E-06	2.48E-06	3.66E-04	8.94E-09	0.00E+00
TEEN	2.47E-06	5.47E-06	3.92E-06	3.65E-06	4.34E-06	5.80E-04	1.60E-08	0.00E+00
CHILD	4.80E-06	3.70E-06	8.66E-06	6.02E-06	7.08E-06	1.15E-03	3.18E-08	0.00E+00
INFANT	7.92E-06	5.73E-06	1.35E-05	1.31E-05	1.18E-05	2.80E-03	5.57E-08	0.00E+00
GOATMILK								
ADULT	9.48E-07	1.02E-06	3.88E-06	1.53E-06	2.45E-06	4.39E-04	4.99E-09	0.00E+00
TEEN	1.56E-06	1.30E-06	6.21E-06	2.71E-06	4.36E-06	6.96E-04	1.00E-08	0.00E+00
CHILD	2.92E-06	9.73E-07	1.36E-05	4.69E-06	7.23E-06	1.38E-03	1.63E-08	0.00E+00
INFANT	5.25E-06	1.22E-06	1.98E-05	1.12E-05	1.25E-05	3.36E-03	2.92E-08	0.00E+00
INHAL								
ADULT	1.91E-07	4.39E-06	4.24E-07	3.21E-07	4.33E-07	5.09E-05	3.00E-05	0.00E+00
TEEN	2.55E-07	6.41E-06	5.32E-07	4.37E-07	5.97E-07	6.52E-05	4.41E-05	0.00E+00
CHILD	2.90E-07	1.20E-05	6.62E-07	4.24E-07	5.64E-07	7.83E-05	3.59E-05	0.00E+00
INFANT	1.82E-07	8.75E-06	3.90E-07	3.65E-07	3.71E-07	7.19E-05	2.36E-05	0.00E+00

TABLE 5. DOSES TO MAXIMUM INDIVIDUAL (MREM), OCTOBER-DECEMBER 2012

SPECIAL LOCATION NO. 1 A Site Boundary
AT .69 MILES NNW

ANNUAL BETA AIR DOSE = 3.97E-04 MILLRADS
ANNUAL GAMMA AIR DOSE = 5.03E-04 MILLRADS

PATHWAY	T.BODY	GI-TRACT	BONE	LIVER	KIDNEY	THYROID	LUNG	SKIN
PLUME	3.37E-04	3.37E-04	3.37E-04	3.37E-04	3.37E-04	3.37E-04	3.40E-04	7.23E-04
GROUND	1.55E-02	1.55E-02	1.55E-02	1.55E-02	1.55E-02	1.55E-02	1.55E-02	1.82E-02
VEGET								
ADULT	2.65E-04	2.18E-03	5.65E-05	1.86E-04	4.35E-05	2.20E-03	4.22E-06	0.00E+00
TEEN	4.15E-04	2.32E-03	8.85E-05	2.84E-04	6.43E-05	2.96E-03	7.45E-06	0.00E+00
CHILD	8.34E-04	1.52E-03	2.04E-04	4.35E-04	9.61E-05	5.68E-03	1.09E-05	0.00E+00
MEAT								
ADULT	7.51E-05	6.05E-04	1.01E-05	5.66E-05	1.37E-05	5.93E-05	2.22E-06	0.00E+00
TEEN	5.95E-05	3.26E-04	7.46E-06	4.39E-05	1.01E-05	4.29E-05	1.99E-06	0.00E+00
CHILD	9.24E-05	1.65E-04	1.21E-05	5.19E-05	1.14E-05	6.48E-05	2.25E-06	0.00E+00
COW MILK								
ADULT	5.17E-05	1.76E-04	2.96E-05	8.89E-05	5.98E-05	1.64E-03	3.48E-07	0.00E+00
TEEN	8.92E-05	2.05E-04	4.70E-05	1.50E-04	9.75E-05	2.60E-03	6.78E-07	0.00E+00
CHILD	1.79E-04	1.34E-04	9.69E-05	2.28E-04	1.47E-04	5.13E-03	1.03E-06	0.00E+00
INFANT	2.52E-04	3.70E-04	1.46E-04	4.12E-04	2.07E-04	1.25E-02	2.10E-06	0.00E+00
GOATMILK								
ADULT	9.54E-06	2.31E-05	1.06E-05	1.63E-05	1.66E-05	1.97E-03	7.00E-08	0.00E+00
TEEN	1.62E-05	2.73E-05	1.85E-05	2.80E-05	2.85E-05	3.12E-03	1.40E-07	0.00E+00
CHILD	3.15E-05	1.82E-05	4.28E-05	4.49E-05	4.55E-05	6.16E-03	2.13E-07	0.00E+00
INFANT	4.92E-05	4.65E-05	7.90E-05	9.20E-05	7.32E-05	1.50E-02	4.15E-07	0.00E+00
INHAL								
ADULT	4.20E-06	7.84E-05	1.23E-06	5.32E-06	2.32E-06	2.05E-04	1.28E-03	0.00E+00
TEEN	5.61E-06	8.34E-05	1.66E-06	7.01E-06	3.08E-06	2.55E-04	1.87E-03	0.00E+00
CHILD	6.38E-06	6.78E-05	2.15E-06	6.18E-06	2.77E-06	2.90E-04	1.52E-03	0.00E+00
INFANT	3.41E-06	3.88E-05	1.47E-06	4.08E-06	1.65E-06	2.64E-04	9.75E-04	0.00E+00

TABLE 5. DOSES TO MAXIMUM INDIVIDUAL (MREM), OCTOBER-DECEMBER 2012 (Continued)

SPECIAL LOCATION NO. 2 A Site Boundary
AT .67 MILES N

ANNUAL BETA AIR DOSE = 5.03E-04 MILLRADS
ANNUAL GAMMA AIR DOSE = 5.86E-04 MILLRADS

PATHWAY	T.BODY	GI-TRACT	BONE	LIVER	KIDNEY	THYROID	LUNG	SKIN
PLUME	3.91E-04	3.91E-04	3.91E-04	3.91E-04	3.91E-04	3.91E-04	3.96E-04	8.68E-04
GROUND	2.53E-02	2.53E-02	2.53E-02	2.53E-02	2.53E-02	2.53E-02	2.53E-02	2.98E-02
VEGET								
ADULT	4.32E-04	3.56E-03	9.09E-05	3.03E-04	7.09E-05	3.57E-03	6.88E-06	0.00E+00
TEEN	6.77E-04	3.79E-03	1.43E-04	4.64E-04	1.05E-04	4.82E-03	1.22E-05	0.00E+00
CHILD	1.36E-03	2.48E-03	3.29E-04	7.09E-04	1.57E-04	9.23E-03	1.78E-05	0.00E+00
MEAT								
ADULT	1.23E-04	9.87E-04	1.64E-05	9.25E-05	2.23E-05	9.64E-05	3.62E-06	0.00E+00
TEEN	9.71E-05	5.32E-04	1.22E-05	7.17E-05	1.64E-05	6.98E-05	3.25E-06	0.00E+00
CHILD	1.51E-04	2.70E-04	1.97E-05	8.47E-05	1.87E-05	1.05E-04	3.67E-06	0.00E+00
COW MILK								
ADULT	8.43E-05	2.87E-04	4.82E-05	1.45E-04	9.76E-05	2.67E-03	5.66E-07	0.00E+00
TEEN	1.46E-04	3.35E-04	7.66E-05	2.44E-04	1.59E-04	4.22E-03	1.10E-06	0.00E+00
CHILD	2.92E-04	2.19E-04	1.58E-04	3.72E-04	2.40E-04	8.34E-03	1.68E-06	0.00E+00
INFANT	4.12E-04	6.03E-04	2.38E-04	6.72E-04	3.37E-04	2.03E-02	3.43E-06	0.00E+00
GOATMILK								
ADULT	1.55E-05	3.77E-05	1.72E-05	2.66E-05	2.70E-05	3.20E-03	1.10E-07	0.00E+00
TEEN	2.63E-05	4.45E-05	2.99E-05	4.56E-05	4.63E-05	5.06E-03	2.19E-07	0.00E+00
CHILD	5.13E-05	2.97E-05	6.92E-05	7.31E-05	7.41E-05	1.00E-02	3.34E-07	0.00E+00
INFANT	8.01E-05	7.58E-05	1.28E-04	1.50E-04	1.19E-04	2.43E-02	6.54E-07	0.00E+00
INHAL								
ADULT	7.25E-06	1.36E-04	2.11E-06	9.18E-06	3.97E-06	3.51E-04	2.22E-03	0.00E+00
TEEN	9.70E-06	1.45E-04	2.84E-06	1.21E-05	5.27E-06	4.38E-04	3.24E-03	0.00E+00
CHILD	1.10E-05	1.17E-04	3.67E-06	1.07E-05	4.73E-06	4.97E-04	2.63E-03	0.00E+00
INFANT	5.89E-06	6.71E-05	2.51E-06	7.02E-06	2.81E-06	4.53E-04	1.69E-03	0.00E+00

TABLE 5. DOSES TO MAXIMUM INDIVIDUAL (MREM), OCTOBER-DECEMBER 2012 (Continued)

SPECIAL LOCATION NO. 3 A Nearest Resident
AT .90 MILES NW

ANNUAL BETA AIR DOSE = 7.61E-04 MILLRADS
ANNUAL GAMMA AIR DOSE = 1.16E-03 MILLRADS

PATHWAY	T.BODY	GI-TRACT	BONE	LIVER	KIDNEY	THYROID	LUNG	SKIN
PLUME	7.79E-04	7.79E-04	7.79E-04	7.79E-04	7.79E-04	7.79E-04	7.86E-04	1.57E-03
GROUND	5.40E-03	5.40E-03	5.40E-03	5.40E-03	5.40E-03	5.40E-03	5.40E-03	6.35E-03
VEGET								
ADULT	9.25E-05	7.60E-04	2.55E-05	6.49E-05	1.55E-05	8.30E-04	1.47E-06	0.00E+00
TEEN	1.45E-04	8.09E-04	3.98E-05	9.93E-05	2.30E-05	1.12E-03	2.60E-06	0.00E+00
CHILD	2.91E-04	5.30E-04	9.18E-05	1.52E-04	3.44E-05	2.14E-03	3.81E-06	0.00E+00
MEAT								
ADULT	2.61E-05	2.10E-04	3.57E-06	1.97E-05	4.77E-06	2.24E-05	7.71E-07	0.00E+00
TEEN	2.07E-05	1.13E-04	2.65E-06	1.53E-05	3.51E-06	1.62E-05	6.91E-07	0.00E+00
CHILD	3.22E-05	5.75E-05	4.29E-06	1.81E-05	3.99E-06	2.45E-05	7.81E-07	0.00E+00
COW MILK								
ADULT	1.81E-05	6.14E-05	1.07E-05	3.12E-05	2.11E-05	6.21E-04	1.27E-07	0.00E+00
TEEN	3.12E-05	7.15E-05	1.71E-05	5.25E-05	3.45E-05	9.82E-04	2.48E-07	0.00E+00
CHILD	6.26E-05	4.68E-05	3.54E-05	8.01E-05	5.21E-05	1.94E-03	3.78E-07	0.00E+00
INFANT	8.85E-05	1.29E-04	5.39E-05	1.45E-04	7.34E-05	4.72E-03	7.66E-07	0.00E+00
GOATMILK								
ADULT	3.55E-06	8.16E-06	4.49E-06	6.04E-06	6.15E-06	7.45E-04	4.31E-08	0.00E+00
TEEN	5.93E-06	9.65E-06	7.80E-06	1.04E-05	1.06E-05	1.18E-03	8.72E-08	0.00E+00
CHILD	1.14E-05	6.47E-06	1.81E-05	1.67E-05	1.70E-05	2.33E-03	1.33E-07	0.00E+00
INFANT	1.79E-05	1.63E-05	3.30E-05	3.44E-05	2.74E-05	5.66E-03	2.52E-07	0.00E+00
INHAL								
ADULT	1.21E-06	2.15E-05	4.15E-07	1.58E-06	7.40E-07	5.83E-05	3.51E-04	0.00E+00
TEEN	1.62E-06	2.29E-05	5.63E-07	2.09E-06	9.89E-07	7.28E-05	5.12E-04	0.00E+00
CHILD	1.85E-06	1.92E-05	7.33E-07	1.86E-06	8.93E-07	8.28E-05	4.15E-04	0.00E+00
INFANT	1.01E-06	1.13E-05	5.14E-07	1.27E-06	5.40E-07	7.55E-05	2.67E-04	0.00E+00

TABLE 5. DOSES TO MAXIMUM INDIVIDUAL (MREM), OCTOBER-DECEMBER 2012 (Continued)

SPECIAL LOCATION NO. 4 A Nearest Cow
AT 3.50 MILES NNW

ANNUAL BETA AIR DOSE = 7.84E-04 MILLRADS
ANNUAL GAMMA AIR DOSE = 1.23E-03 MILLRADS

PATHWAY	T.BODY	GI-TRACT	BONE	LIVER	KIDNEY	THYROID	LUNG	SKIN
PLUME	8.23E-04	8.23E-04	8.23E-04	8.23E-04	8.23E-04	8.23E-04	8.31E-04	1.64E-03
GROUND	3.15E-04	3.15E-04	3.15E-04	3.15E-04	3.15E-04	3.15E-04	3.15E-04	3.71E-04
VEGET								
ADULT	5.46E-06	4.45E-05	2.62E-06	3.84E-06	9.75E-07	6.08E-05	8.68E-08	0.00E+00
TEEN	8.53E-06	4.74E-05	4.06E-06	5.87E-06	1.45E-06	8.19E-05	1.54E-07	0.00E+00
CHILD	1.71E-05	3.10E-05	9.35E-06	9.00E-06	2.18E-06	1.57E-04	2.25E-07	0.00E+00
MEAT								
ADULT	1.53E-06	1.23E-05	2.21E-07	1.15E-06	2.80E-07	1.64E-06	4.45E-08	0.00E+00
TEEN	1.21E-06	6.61E-06	1.64E-07	8.93E-07	2.07E-07	1.18E-06	3.99E-08	0.00E+00
CHILD	1.88E-06	3.35E-06	2.68E-07	1.05E-06	2.35E-07	1.79E-06	4.51E-08	0.00E+00
COW MILK								
ADULT	1.08E-06	3.59E-06	7.03E-07	1.86E-06	1.29E-06	4.56E-05	8.51E-09	0.00E+00
TEEN	1.86E-06	4.19E-06	1.13E-06	3.13E-06	2.11E-06	7.21E-05	1.68E-08	0.00E+00
CHILD	3.71E-06	2.74E-06	2.39E-06	4.80E-06	3.20E-06	1.43E-04	2.56E-08	0.00E+00
INFANT	5.27E-06	7.53E-06	3.71E-06	8.73E-06	4.56E-06	3.47E-04	5.10E-08	0.00E+00
GOATMILK								
ADULT	2.50E-07	4.98E-07	4.14E-07	4.20E-07	4.30E-07	5.47E-05	6.13E-09	0.00E+00
TEEN	4.03E-07	5.93E-07	7.20E-07	7.25E-07	7.45E-07	8.66E-05	1.26E-08	0.00E+00
CHILD	7.52E-07	4.02E-07	1.68E-06	1.18E-06	1.20E-06	1.71E-04	1.93E-08	0.00E+00
INFANT	1.19E-06	9.76E-07	2.99E-06	2.47E-06	1.96E-06	4.16E-04	3.55E-08	0.00E+00
INHAL								
ADULT	2.08E-07	2.48E-06	1.31E-07	3.13E-07	1.97E-07	9.15E-06	4.08E-05	0.00E+00
TEEN	2.81E-07	2.63E-06	1.79E-07	4.22E-07	2.68E-07	1.15E-05	5.96E-05	0.00E+00
CHILD	3.29E-07	2.42E-06	2.39E-07	3.92E-07	2.47E-07	1.32E-05	4.84E-05	0.00E+00
INFANT	1.99E-07	1.65E-06	1.77E-07	3.11E-07	1.57E-07	1.21E-05	3.11E-05	0.00E+00

TABLE 5. DOSES TO MAXIMUM INDIVIDUAL (MREM), OCTOBER-DECEMBER 2012 (Continued)

SPECIAL LOCATION NO. 5 A Nearest Garden
AT 2.80 MILES NNW

ANNUAL BETA AIR DOSE = 8.46E-04 MILLRADS
ANNUAL GAMMA AIR DOSE = 1.32E-03 MILLRADS

PATHWAY	T.BODY	GI-TRACT	BONE	LIVER	KIDNEY	THYROID	LUNG	SKIN
PLUME	8.87E-04	8.87E-04	8.87E-04	8.87E-04	8.87E-04	8.87E-04	8.95E-04	1.77E-03
GROUND	5.14E-04	5.14E-04	5.14E-04	5.14E-04	5.14E-04	5.14E-04	5.14E-04	6.04E-04
VEGET								
ADULT	8.88E-06	7.25E-05	4.04E-06	6.24E-06	1.57E-06	9.64E-05	1.41E-07	0.00E+00
TEEN	1.39E-05	7.72E-05	6.26E-06	9.55E-06	2.33E-06	1.30E-04	2.50E-07	0.00E+00
CHILD	2.79E-05	5.05E-05	1.44E-05	1.46E-05	3.51E-06	2.49E-04	3.66E-07	0.00E+00
MEAT								
ADULT	2.49E-06	2.00E-05	3.58E-07	1.88E-06	4.57E-07	2.60E-06	7.27E-08	0.00E+00
TEEN	1.97E-06	1.08E-05	2.66E-07	1.45E-06	3.37E-07	1.88E-06	6.51E-08	0.00E+00
CHILD	3.06E-06	5.46E-06	4.33E-07	1.72E-06	3.83E-07	2.84E-06	7.36E-08	0.00E+00
COW MILK								
ADULT	1.76E-06	5.86E-06	1.13E-06	3.02E-06	2.08E-06	7.23E-05	1.36E-08	0.00E+00
TEEN	3.02E-06	6.83E-06	1.82E-06	5.09E-06	3.41E-06	1.14E-04	2.68E-08	0.00E+00
CHILD	6.04E-06	4.47E-06	3.82E-06	7.79E-06	5.19E-06	2.26E-04	4.09E-08	0.00E+00
INFANT	8.57E-06	1.23E-05	5.93E-06	1.42E-05	7.37E-06	5.50E-04	8.17E-08	0.00E+00
GOATMILK								
ADULT	3.99E-07	8.07E-07	6.44E-07	6.70E-07	6.86E-07	8.67E-05	9.25E-09	0.00E+00
TEEN	6.45E-07	9.60E-07	1.12E-06	1.16E-06	1.19E-06	1.37E-04	1.89E-08	0.00E+00
CHILD	1.21E-06	6.50E-07	2.61E-06	1.89E-06	1.91E-06	2.71E-04	2.91E-08	0.00E+00
INFANT	1.91E-06	1.59E-06	4.66E-06	3.93E-06	3.12E-06	6.60E-04	5.36E-08	0.00E+00
INHAL								
ADULT	2.84E-07	3.75E-06	1.58E-07	4.13E-07	2.44E-07	1.28E-05	6.23E-05	0.00E+00
TEEN	3.82E-07	3.90E-06	2.16E-07	5.53E-07	3.31E-07	1.61E-05	9.11E-05	0.00E+00
CHILD	4.45E-07	3.19E-06	2.87E-07	5.09E-07	3.04E-07	1.84E-05	7.39E-05	0.00E+00
INFANT	2.62E-07	2.04E-06	2.11E-07	3.92E-07	1.92E-07	1.68E-05	4.75E-05	0.00E+00

TABLE 6. DOSES TO MAXIMUM INDIVIDUAL (MREM), JULY-DECEMBER 2012

SPECIAL LOCATION NO. 1 A Site Boundary
AT .69 MILES NNW

ANNUAL BETA AIR DOSE = 6.03E-04 MILLRADS
ANNUAL GAMMA AIR DOSE = 8.58E-04 MILLRADS

PATHWAY	T.BODY	GI-TRACT	BONE	LIVER	KIDNEY	THYROID	LUNG	SKIN
PLUME	5.75E-04	5.75E-04	5.75E-04	5.75E-04	5.75E-04	5.75E-04	5.81E-04	1.19E-03
GROUND	2.28E-02	2.28E-02	2.28E-02	2.28E-02	2.28E-02	2.28E-02	2.28E-02	2.68E-02
VEGET								
ADULT	3.98E-04	3.15E-03	4.85E-04	2.66E-04	8.25E-05	8.55E-03	4.40E-06	0.00E+00
TEEN	6.20E-04	3.36E-03	6.84E-04	4.06E-04	1.23E-04	1.15E-02	7.77E-06	0.00E+00
CHILD	1.24E-03	2.20E-03	1.45E-03	6.26E-04	1.89E-04	2.21E-02	1.14E-05	0.00E+00
MEAT								
ADULT	1.07E-04	8.61E-04	1.65E-05	7.42E-05	1.68E-05	2.29E-04	2.30E-06	0.00E+00
TEEN	8.45E-05	4.64E-04	1.20E-05	5.76E-05	1.24E-05	1.66E-04	2.06E-06	0.00E+00
CHILD	1.31E-04	2.35E-04	1.94E-05	6.80E-05	1.42E-05	2.51E-04	2.33E-06	0.00E+00
COW MILK								
ADULT	7.29E-05	2.45E-04	6.28E-05	1.20E-04	9.44E-05	6.45E-03	4.48E-07	0.00E+00
TEEN	1.25E-04	2.86E-04	1.01E-04	2.03E-04	1.58E-04	1.02E-02	8.59E-07	0.00E+00
CHILD	2.49E-04	1.89E-04	2.15E-04	3.16E-04	2.45E-04	2.02E-02	1.38E-06	0.00E+00
INFANT	3.67E-04	4.61E-04	3.29E-04	5.99E-04	3.68E-04	4.92E-02	2.73E-06	0.00E+00
GOATMILK								
ADULT	2.21E-05	3.74E-05	6.27E-05	3.66E-05	4.88E-05	7.74E-03	1.10E-07	0.00E+00
TEEN	3.70E-05	4.54E-05	1.02E-04	6.39E-05	8.57E-05	1.22E-02	2.18E-07	0.00E+00
CHILD	7.07E-05	3.16E-05	2.25E-04	1.07E-04	1.40E-04	2.43E-02	3.43E-07	0.00E+00
INFANT	1.19E-04	6.42E-05	3.43E-04	2.40E-04	2.37E-04	5.90E-02	6.49E-07	0.00E+00
INHAL								
ADULT	7.89E-06	1.44E-04	8.97E-06	1.11E-05	9.50E-06	1.08E-03	1.95E-03	0.00E+00
TEEN	1.05E-05	1.57E-04	1.13E-05	1.49E-05	1.30E-05	1.38E-03	2.85E-03	0.00E+00
CHILD	1.20E-05	1.06E-04	1.41E-05	1.38E-05	1.21E-05	1.63E-03	2.31E-03	0.00E+00
INFANT	6.84E-06	5.29E-05	8.38E-06	1.04E-05	7.78E-06	1.49E-03	1.48E-03	0.00E+00

TABLE 6. DOSES TO MAXIMUM INDIVIDUAL (MREM), JULY-DECEMBER 2012 (Continued)

SPECIAL LOCATION NO. 2 A Site Boundary
AT .67 MILES N

ANNUAL BETA AIR DOSE = 1.10E-03 MILLRADS
ANNUAL GAMMA AIR DOSE = 1.53E-03 MILLRADS

PATHWAY	T.BODY	GI-TRACT	BONE	LIVER	KIDNEY	THYROID	LUNG	SKIN
PLUME	1.03E-03	1.03E-03	1.03E-03	1.03E-03	1.03E-03	1.03E-03	1.04E-03	2.13E-03
GROUND	3.89E-02	3.89E-02	3.89E-02	3.89E-02	3.89E-02	3.89E-02	3.89E-02	4.58E-02
VEGET								
ADULT	6.80E-04	5.39E-03	8.35E-04	4.55E-04	1.43E-04	1.49E-02	7.55E-06	0.00E+00
TEEN	1.06E-03	5.74E-03	1.18E-03	6.95E-04	2.13E-04	2.01E-02	1.33E-05	0.00E+00
CHILD	2.13E-03	3.76E-03	2.50E-03	1.07E-03	3.28E-04	3.85E-02	1.95E-05	0.00E+00
MEAT								
ADULT	1.82E-04	1.47E-03	2.83E-05	1.27E-04	2.87E-05	4.00E-04	3.94E-06	0.00E+00
TEEN	1.44E-04	7.92E-04	2.06E-05	9.83E-05	2.13E-05	2.90E-04	3.53E-06	0.00E+00
CHILD	2.24E-04	4.01E-04	3.33E-05	1.16E-04	2.43E-05	4.37E-04	3.99E-06	0.00E+00
COW MILK								
ADULT	1.25E-04	4.18E-04	1.08E-04	2.06E-04	1.63E-04	1.13E-02	8.17E-07	0.00E+00
TEEN	2.15E-04	4.90E-04	1.74E-04	3.49E-04	2.72E-04	1.79E-02	1.56E-06	0.00E+00
CHILD	4.28E-04	3.23E-04	3.72E-04	5.42E-04	4.23E-04	3.54E-02	2.54E-06	0.00E+00
INFANT	6.30E-04	7.88E-04	5.71E-04	1.03E-03	6.37E-04	8.61E-02	4.98E-06	0.00E+00
GOATMILK								
ADULT	3.85E-05	6.46E-05	1.09E-04	6.39E-05	8.54E-05	1.35E-02	2.22E-07	0.00E+00
TEEN	6.44E-05	7.84E-05	1.77E-04	1.12E-04	1.50E-04	2.14E-02	4.44E-07	0.00E+00
CHILD	1.23E-04	5.48E-05	3.91E-04	1.87E-04	2.46E-04	4.25E-02	6.99E-07	0.00E+00
INFANT	2.07E-04	1.10E-04	5.99E-04	4.19E-04	4.16E-04	1.03E-01	1.31E-06	0.00E+00
INHAL								
ADULT	1.30E-05	2.70E-04	1.50E-05	1.88E-05	1.69E-05	1.86E-03	3.14E-03	0.00E+00
TEEN	1.74E-05	3.40E-04	1.90E-05	2.52E-05	2.31E-05	2.37E-03	4.59E-03	0.00E+00
CHILD	1.98E-05	4.77E-04	2.37E-05	2.34E-05	2.16E-05	2.82E-03	3.73E-03	0.00E+00
INFANT	1.14E-05	3.29E-04	1.43E-05	1.80E-05	1.39E-05	2.58E-03	2.41E-03	0.00E+00

TABLE 6. DOSES TO MAXIMUM INDIVIDUAL (MREM), JULY-DECEMBER 2012 (Continued)

SPECIAL LOCATION NO. 3 A Nearest Resident
AT .90 MILES NW

ANNUAL BETA AIR DOSE = 1.12E-03 MILLRADS
ANNUAL GAMMA AIR DOSE = 1.74E-03 MILLRADS

PATHWAY	T.BODY	GI-TRACT	BONE	LIVER	KIDNEY	THYROID	LUNG	SKIN
PLUME	1.17E-03	1.17E-03	1.17E-03	1.17E-03	1.17E-03	1.17E-03	1.18E-03	2.34E-03
GROUND	8.08E-03	8.08E-03	8.08E-03	8.08E-03	8.08E-03	8.08E-03	8.08E-03	9.51E-03
VEGET								
ADULT	1.42E-04	1.12E-03	1.81E-04	9.49E-05	3.03E-05	3.21E-03	1.58E-06	0.00E+00
TEEN	2.21E-04	1.19E-03	2.57E-04	1.45E-04	4.51E-05	4.31E-03	2.79E-06	0.00E+00
CHILD	4.42E-04	7.81E-04	5.47E-04	2.24E-04	6.95E-05	8.26E-03	4.09E-06	0.00E+00
MEAT								
ADULT	3.78E-05	3.05E-04	5.97E-06	2.63E-05	5.99E-06	8.59E-05	8.17E-07	0.00E+00
TEEN	2.99E-05	1.64E-04	4.36E-06	2.04E-05	4.44E-06	6.22E-05	7.32E-07	0.00E+00
CHILD	4.65E-05	8.32E-05	7.05E-06	2.41E-05	5.08E-06	9.39E-05	8.28E-07	0.00E+00
COW MILK								
ADULT	2.62E-05	8.70E-05	2.31E-05	4.31E-05	3.43E-05	2.42E-03	1.80E-07	0.00E+00
TEEN	4.49E-05	1.02E-04	3.72E-05	7.31E-05	5.74E-05	3.83E-03	3.47E-07	0.00E+00
CHILD	8.93E-05	6.72E-05	7.97E-05	1.14E-04	8.93E-05	7.60E-03	5.63E-07	0.00E+00
INFANT	1.32E-04	1.64E-04	1.23E-04	2.17E-04	1.35E-04	1.85E-02	1.10E-06	0.00E+00
GOATMILK								
ADULT	8.39E-06	1.36E-05	2.37E-05	1.39E-05	1.83E-05	2.91E-03	8.04E-08	0.00E+00
TEEN	1.39E-05	1.65E-05	3.87E-05	2.42E-05	3.23E-05	4.60E-03	1.63E-07	0.00E+00
CHILD	2.62E-05	1.16E-05	8.60E-05	4.06E-05	5.29E-05	9.13E-03	2.54E-07	0.00E+00
INFANT	4.43E-05	2.31E-05	1.33E-04	9.12E-05	8.95E-05	2.22E-02	4.69E-07	0.00E+00
INHAL								
ADULT	1.86E-06	3.65E-05	2.14E-06	2.74E-06	2.46E-06	2.57E-04	4.23E-04	0.00E+00
TEEN	2.48E-06	4.60E-05	2.73E-06	3.68E-06	3.36E-06	3.28E-04	6.19E-04	0.00E+00
CHILD	2.84E-06	6.55E-05	3.43E-06	3.42E-06	3.14E-06	3.90E-04	5.03E-04	0.00E+00
INFANT	1.66E-06	4.55E-05	2.11E-06	2.67E-06	2.03E-06	3.58E-04	3.25E-04	0.00E+00

TABLE 6. DOSES TO MAXIMUM INDIVIDUAL (MREM), JULY-DECEMBER 2012 (Continued)

SPECIAL LOCATION NO. 4 A Nearest Cow
AT 3.50 MILES NNW

ANNUAL BETA AIR DOSE = 9.11E-04 MILLRADS
ANNUAL GAMMA AIR DOSE = 1.43E-03 MILLRADS

PATHWAY	T.BODY	GI-TRACT	BONE	LIVER	KIDNEY	THYROID	LUNG	SKIN
PLUME	9.59E-04	9.59E-04	9.59E-04	9.59E-04	9.59E-04	9.59E-04	9.69E-04	1.92E-03
GROUND	4.52E-04	4.52E-04	4.52E-04	4.52E-04	4.52E-04	4.52E-04	4.52E-04	5.32E-04
VEGET								
ADULT	7.96E-06	6.27E-05	1.09E-05	5.35E-06	1.75E-06	1.89E-04	8.94E-08	0.00E+00
TEEN	1.24E-05	6.68E-05	1.56E-05	8.17E-06	2.61E-06	2.54E-04	1.58E-07	0.00E+00
CHILD	2.49E-05	4.38E-05	3.35E-05	1.26E-05	4.03E-06	4.87E-04	2.32E-07	0.00E+00
MEAT								
ADULT	2.11E-06	1.70E-05	3.43E-07	1.47E-06	3.37E-07	5.06E-06	4.55E-08	0.00E+00
TEEN	1.67E-06	9.18E-06	2.51E-07	1.14E-06	2.50E-07	3.67E-06	4.08E-08	0.00E+00
CHILD	2.60E-06	4.65E-06	4.08E-07	1.35E-06	2.86E-07	5.54E-06	4.61E-08	0.00E+00
COW MILK								
ADULT	1.48E-06	4.87E-06	1.35E-06	2.45E-06	1.96E-06	1.43E-04	1.10E-08	0.00E+00
TEEN	2.54E-06	5.71E-06	2.18E-06	4.15E-06	3.28E-06	2.26E-04	2.14E-08	0.00E+00
CHILD	5.04E-06	3.77E-06	4.70E-06	6.46E-06	5.12E-06	4.48E-04	3.44E-08	0.00E+00
INFANT	7.45E-06	9.17E-06	7.32E-06	1.23E-05	7.75E-06	1.09E-03	6.67E-08	0.00E+00
GOATMILK								
ADULT	5.06E-07	7.75E-07	1.44E-06	8.34E-07	1.08E-06	1.71E-04	7.90E-09	0.00E+00
TEEN	8.23E-07	9.45E-07	2.36E-06	1.46E-06	1.90E-06	2.71E-04	1.61E-08	0.00E+00
CHILD	1.54E-06	6.64E-07	5.28E-06	2.45E-06	3.13E-06	5.38E-04	2.50E-08	0.00E+00
INFANT	2.59E-06	1.31E-06	8.25E-06	5.48E-06	5.29E-06	1.31E-03	4.58E-08	0.00E+00
INHAL								
ADULT	3.33E-07	4.84E-06	3.89E-07	5.26E-07	4.70E-07	3.98E-05	5.86E-05	0.00E+00
TEEN	4.47E-07	5.84E-06	5.06E-07	7.11E-07	6.44E-07	5.07E-05	8.58E-05	0.00E+00
CHILD	5.20E-07	7.20E-06	6.48E-07	6.72E-07	6.03E-07	6.03E-05	6.96E-05	0.00E+00
INFANT	3.20E-07	4.96E-06	4.25E-07	5.54E-07	3.91E-07	5.53E-05	4.49E-05	0.00E+00

TABLE 6. DOSES TO MAXIMUM INDIVIDUAL (MREM), JULY-DECEMBER 2012 (Continued)

SPECIAL LOCATION NO. 5 A Nearest Garden
AT 2.80 MILES NNW

ANNUAL BETA AIR DOSE = 9.74E-04 MILLRADS
ANNUAL GAMMA AIR DOSE = 1.53E-03 MILLRADS

PATHWAY	T.BODY	GI-TRACT	BONE	LIVER	KIDNEY	THYROID	LUNG	SKIN
PLUME	1.02E-03	1.02E-03	1.02E-03	1.02E-03	1.02E-03	1.02E-03	1.03E-03	2.05E-03
GROUND	7.67E-04	7.67E-04	7.67E-04	7.67E-04	7.67E-04	7.67E-04	7.67E-04	9.02E-04
VEGET								
ADULT	1.35E-05	1.06E-04	1.82E-05	9.05E-06	2.94E-06	3.15E-04	1.51E-07	0.00E+00
TEEN	2.10E-05	1.13E-04	2.59E-05	1.38E-05	4.38E-06	4.24E-04	2.67E-07	0.00E+00
CHILD	4.21E-05	7.42E-05	5.54E-05	2.13E-05	6.75E-06	8.12E-04	3.92E-07	0.00E+00
MEAT								
ADULT	3.59E-06	2.89E-05	5.78E-07	2.50E-06	5.71E-07	8.44E-06	7.73E-08	0.00E+00
TEEN	2.84E-06	1.56E-05	4.23E-07	1.94E-06	4.23E-07	6.12E-06	6.93E-08	0.00E+00
CHILD	4.41E-06	7.89E-06	6.85E-07	2.29E-06	4.84E-07	9.23E-06	7.83E-08	0.00E+00
COW MILK								
ADULT	2.51E-06	8.26E-06	2.26E-06	4.13E-06	3.30E-06	2.38E-04	1.81E-08	0.00E+00
TEEN	4.30E-06	9.68E-06	3.65E-06	7.01E-06	5.53E-06	3.77E-04	3.51E-08	0.00E+00
CHILD	8.53E-06	6.39E-06	7.85E-06	1.09E-05	8.61E-06	7.47E-04	5.64E-08	0.00E+00
INFANT	1.26E-05	1.56E-05	1.22E-05	2.08E-05	1.30E-05	1.82E-03	1.10E-07	0.00E+00
GOATMILK								
ADULT	8.39E-07	1.31E-06	2.39E-06	1.38E-06	1.80E-06	2.85E-04	1.18E-08	0.00E+00
TEEN	1.37E-06	1.59E-06	3.91E-06	2.42E-06	3.17E-06	4.52E-04	2.40E-08	0.00E+00
CHILD	2.57E-06	1.12E-06	8.73E-06	4.06E-06	5.21E-06	8.96E-04	3.72E-08	0.00E+00
INFANT	4.34E-06	2.21E-06	1.36E-05	9.10E-06	8.82E-06	2.18E-03	6.82E-08	0.00E+00
INHAL								
ADULT	4.69E-07	7.32E-06	5.45E-07	7.24E-07	6.46E-07	5.90E-05	9.01E-05	0.00E+00
TEEN	6.29E-07	8.66E-06	7.05E-07	9.77E-07	8.85E-07	7.51E-05	1.32E-04	0.00E+00
CHILD	7.27E-07	9.61E-06	8.97E-07	9.19E-07	8.27E-07	8.91E-05	1.07E-04	0.00E+00
INFANT	4.41E-07	6.34E-06	5.77E-07	7.46E-07	5.36E-07	8.18E-05	6.90E-05	0.00E+00

TABLE 7. DOSES TO MAXIMUM INDIVIDUAL (MREM), JANUARY-DECEMBER 2012

SPECIAL LOCATION NO. 1 A Site Boundary
AT .69 MILES NNW

ANNUAL BETA AIR DOSE = 6.69E-04 MILLRADS
ANNUAL GAMMA AIR DOSE = 9.56E-04 MILLRADS

PATHWAY	T.BODY	GI-TRACT	BONE	LIVER	KIDNEY	THYROID	LUNG	SKIN
PLUME	6.41E-04	6.41E-04	6.41E-04	6.41E-04	6.41E-04	6.41E-04	6.47E-04	1.32E-03
GROUND	2.73E-02	2.73E-02	2.73E-02	2.73E-02	2.73E-02	2.73E-02	2.73E-02	3.21E-02
VEGET								
ADULT	5.06E-04	3.73E-03	5.27E-04	3.62E-04	1.14E-04	1.06E-02	1.09E-05	0.00E+00
TEEN	7.62E-04	3.97E-03	7.56E-04	5.58E-04	1.72E-04	1.43E-02	2.00E-05	0.00E+00
CHILD	1.49E-03	2.60E-03	1.62E-03	8.77E-04	2.69E-04	2.74E-02	3.01E-05	0.00E+00
MEAT								
ADULT	1.27E-04	1.01E-03	1.99E-05	8.68E-05	1.84E-05	2.84E-04	2.81E-06	0.00E+00
TEEN	9.99E-05	5.45E-04	1.49E-05	6.74E-05	1.38E-05	2.06E-04	2.54E-06	0.00E+00
CHILD	1.54E-04	2.76E-04	2.47E-05	8.03E-05	1.60E-05	3.11E-04	2.90E-06	0.00E+00
COW MILK								
ADULT	1.05E-04	2.79E-04	9.51E-05	1.66E-04	1.15E-04	8.00E-03	5.04E-06	0.00E+00
TEEN	1.60E-04	3.27E-04	1.60E-04	2.84E-04	1.95E-04	1.27E-02	1.03E-05	0.00E+00
CHILD	2.87E-04	2.16E-04	3.58E-04	4.55E-04	3.08E-04	2.51E-02	1.60E-05	0.00E+00
INFANT	4.19E-04	4.80E-04	5.65E-04	8.80E-04	4.73E-04	6.11E-02	2.91E-05	0.00E+00
GOATMILK								
ADULT	1.05E-04	4.55E-05	1.55E-04	1.64E-04	1.00E-04	9.60E-03	1.38E-05	0.00E+00
TEEN	1.18E-04	5.54E-05	2.70E-04	2.89E-04	1.76E-04	1.52E-02	2.86E-05	0.00E+00
CHILD	1.37E-04	3.89E-05	6.30E-04	4.97E-04	2.91E-04	3.01E-02	4.39E-05	0.00E+00
INFANT	1.92E-04	7.04E-05	1.00E-03	1.01E-03	4.84E-04	7.33E-02	7.95E-05	0.00E+00
INHAL								
ADULT	8.40E-06	1.51E-04	8.75E-06	1.19E-05	9.97E-06	1.09E-03	1.90E-03	0.00E+00
TEEN	1.08E-05	1.85E-04	1.13E-05	1.60E-05	1.36E-05	1.39E-03	2.78E-03	0.00E+00
CHILD	1.18E-05	2.44E-04	1.43E-05	1.49E-05	1.27E-05	1.65E-03	2.25E-03	0.00E+00
INFANT	6.76E-06	1.66E-04	8.76E-06	1.14E-05	8.21E-06	1.51E-03	1.45E-03	0.00E+00

TABLE 7. DOSES TO MAXIMUM INDIVIDUAL (MREM), JANUARY-DECEMBER 2012 (Continued)

SPECIAL LOCATION NO. 2 A Site Boundary
AT .67 MILES N

ANNUAL BETA AIR DOSE = 1.06E-03 MILLRADS
ANNUAL GAMMA AIR DOSE = 1.51E-03 MILLRADS

PATHWAY	T.BODY	GI-TRACT	BONE	LIVER	KIDNEY	THYROID	LUNG	SKIN
PLUME	1.01E-03	1.01E-03	1.01E-03	1.01E-03	1.01E-03	1.01E-03	1.02E-03	2.09E-03
GROUND	4.59E-02	4.59E-02	4.59E-02	4.59E-02	4.59E-02	4.59E-02	4.59E-02	5.40E-02
VEGET								
ADULT	8.51E-04	6.27E-03	8.96E-04	6.10E-04	1.92E-04	1.80E-02	1.84E-05	0.00E+00
TEEN	1.28E-03	6.68E-03	1.28E-03	9.39E-04	2.90E-04	2.42E-02	3.37E-05	0.00E+00
CHILD	2.50E-03	4.37E-03	2.76E-03	1.48E-03	4.54E-04	4.64E-02	5.06E-05	0.00E+00
MEAT								
ADULT	2.14E-04	1.70E-03	3.35E-05	1.46E-04	3.10E-05	4.82E-04	4.72E-06	0.00E+00
TEEN	1.68E-04	9.16E-04	2.51E-05	1.13E-04	2.32E-05	3.49E-04	4.27E-06	0.00E+00
CHILD	2.59E-04	4.64E-04	4.17E-05	1.35E-04	2.69E-05	5.27E-04	4.87E-06	0.00E+00
COW MILK								
ADULT	1.77E-04	4.70E-04	1.61E-04	2.79E-04	1.95E-04	1.36E-02	8.48E-06	0.00E+00
TEEN	2.70E-04	5.50E-04	2.70E-04	4.78E-04	3.29E-04	2.15E-02	1.74E-05	0.00E+00
CHILD	4.84E-04	3.64E-04	6.04E-04	7.67E-04	5.19E-04	4.26E-02	2.69E-05	0.00E+00
INFANT	7.06E-04	8.07E-04	9.55E-04	1.48E-03	7.98E-04	1.04E-01	4.90E-05	0.00E+00
GOATMILK								
ADULT	1.78E-04	7.66E-05	2.62E-04	2.77E-04	1.69E-04	1.63E-02	2.33E-05	0.00E+00
TEEN	1.99E-04	9.34E-05	4.56E-04	4.87E-04	2.98E-04	2.58E-02	4.81E-05	0.00E+00
CHILD	2.31E-04	6.57E-05	1.06E-03	8.37E-04	4.92E-04	5.11E-02	7.40E-05	0.00E+00
INFANT	3.25E-04	1.19E-04	1.69E-03	1.70E-03	8.17E-04	1.24E-01	1.34E-04	0.00E+00
INHAL								
ADULT	1.30E-05	2.32E-04	1.36E-05	1.86E-05	1.58E-05	1.74E-03	2.92E-03	0.00E+00
TEEN	1.67E-05	2.84E-04	1.76E-05	2.49E-05	2.16E-05	2.22E-03	4.27E-03	0.00E+00
CHILD	1.84E-05	3.76E-04	2.23E-05	2.32E-05	2.02E-05	2.63E-03	3.47E-03	0.00E+00
INFANT	1.05E-05	2.56E-04	1.37E-05	1.79E-05	1.30E-05	2.41E-03	2.24E-03	0.00E+00

TABLE 7. DOSES TO MAXIMUM INDIVIDUAL (MREM), JANUARY-DECEMBER 2012 (Continued)

SPECIAL LOCATION NO. 3 A Nearest Resident
AT .90 MILES NW

ANNUAL BETA AIR DOSE = 1.19E-03 MILLRADS
ANNUAL GAMMA AIR DOSE = 1.86E-03 MILLRADS

PATHWAY	T.BODY	GI-TRACT	BONE	LIVER	KIDNEY	THYROID	LUNG	SKIN
PLUME	1.25E-03	1.25E-03	1.25E-03	1.25E-03	1.25E-03	1.25E-03	1.26E-03	2.50E-03
GROUND	1.10E-02	1.10E-02	1.10E-02	1.10E-02	1.10E-02	1.10E-02	1.10E-02	1.29E-02
VEGET								
ADULT	2.04E-04	1.50E-03	2.23E-04	1.46E-04	4.67E-05	4.44E-03	4.41E-06	0.00E+00
TEEN	3.07E-04	1.60E-03	3.21E-04	2.25E-04	7.06E-05	5.98E-03	8.08E-06	0.00E+00
CHILD	5.98E-04	1.04E-03	6.91E-04	3.54E-04	1.10E-04	1.15E-02	1.21E-05	0.00E+00
MEAT								
ADULT	5.12E-05	4.06E-04	8.12E-06	3.49E-05	7.44E-06	1.19E-04	1.13E-06	0.00E+00
TEEN	4.01E-05	2.19E-04	6.08E-06	2.71E-05	5.57E-06	8.63E-05	1.02E-06	0.00E+00
CHILD	6.17E-05	1.11E-04	1.01E-05	3.23E-05	6.45E-06	1.30E-04	1.16E-06	0.00E+00
COW MILK								
ADULT	4.27E-05	1.12E-04	3.91E-05	6.71E-05	4.72E-05	3.35E-03	2.04E-06	0.00E+00
TEEN	6.49E-05	1.32E-04	6.57E-05	1.15E-04	7.98E-05	5.31E-03	4.18E-06	0.00E+00
CHILD	1.16E-04	8.71E-05	1.47E-04	1.85E-04	1.26E-04	1.05E-02	6.46E-06	0.00E+00
INFANT	1.70E-04	1.93E-04	2.34E-04	3.58E-04	1.94E-04	2.56E-02	1.18E-05	0.00E+00
GOATMILK								
ADULT	4.29E-05	1.85E-05	6.40E-05	6.68E-05	4.12E-05	4.02E-03	5.60E-06	0.00E+00
TEEN	4.81E-05	2.26E-05	1.11E-04	1.18E-04	7.27E-05	6.37E-03	1.16E-05	0.00E+00
CHILD	5.62E-05	1.59E-05	2.60E-04	2.02E-04	1.20E-04	1.26E-02	1.78E-05	0.00E+00
INFANT	7.93E-05	2.86E-05	4.14E-04	4.12E-04	2.00E-04	3.07E-02	3.22E-05	0.00E+00
INHAL								
ADULT	2.18E-06	3.73E-05	2.29E-06	3.14E-06	2.66E-06	2.80E-04	4.68E-04	0.00E+00
TEEN	2.80E-06	4.57E-05	2.96E-06	4.23E-06	3.65E-06	3.56E-04	6.85E-04	0.00E+00
CHILD	3.09E-06	6.16E-05	3.77E-06	3.95E-06	3.41E-06	4.22E-04	5.56E-04	0.00E+00
INFANT	1.79E-06	4.24E-05	2.35E-06	3.07E-06	2.20E-06	3.87E-04	3.58E-04	0.00E+00

TABLE 7. DOSES TO MAXIMUM INDIVIDUAL (MREM), JANUARY-DECEMBER 2012 (Continued)

SPECIAL LOCATION NO. 4 A Nearest Cow
AT 3.50 MILES NNW

ANNUAL BETA AIR DOSE = 7.99E-04 MILLRADS
ANNUAL GAMMA AIR DOSE = 1.26E-03 MILLRADS

PATHWAY	T.BODY	GI-TRACT	BONE	LIVER	KIDNEY	THYROID	LUNG	SKIN
PLUME	8.44E-04	8.44E-04	8.44E-04	8.44E-04	8.44E-04	8.44E-04	8.52E-04	1.68E-03
GROUND	5.46E-04	5.46E-04	5.46E-04	5.46E-04	5.46E-04	5.46E-04	5.46E-04	6.42E-04
VEGET								
ADULT	1.02E-05	7.47E-05	1.20E-05	7.33E-06	2.40E-06	2.34E-04	2.21E-07	0.00E+00
TEEN	1.53E-05	7.95E-05	1.74E-05	1.13E-05	3.63E-06	3.15E-04	4.05E-07	0.00E+00
CHILD	2.99E-05	5.21E-05	3.76E-05	1.78E-05	5.68E-06	6.04E-04	6.07E-07	0.00E+00
MEAT								
ADULT	2.55E-06	2.02E-05	4.15E-07	1.74E-06	3.73E-07	6.28E-06	5.59E-08	0.00E+00
TEEN	2.00E-06	1.09E-05	3.11E-07	1.35E-06	2.79E-07	4.55E-06	5.06E-08	0.00E+00
CHILD	3.07E-06	5.51E-06	5.18E-07	1.61E-06	3.24E-07	6.87E-06	5.77E-08	0.00E+00
COW MILK								
ADULT	2.15E-06	5.60E-06	2.01E-06	3.38E-06	2.41E-06	1.77E-04	1.02E-07	0.00E+00
TEEN	3.27E-06	6.57E-06	3.39E-06	5.80E-06	4.08E-06	2.80E-04	2.10E-07	0.00E+00
CHILD	5.85E-06	4.35E-06	7.62E-06	9.33E-06	6.44E-06	5.54E-04	3.25E-07	0.00E+00
INFANT	8.58E-06	9.63E-06	1.21E-05	1.81E-05	9.95E-06	1.35E-03	5.92E-07	0.00E+00
GOATMILK								
ADULT	2.18E-06	9.42E-07	3.32E-06	3.40E-06	2.12E-06	2.12E-04	2.82E-07	0.00E+00
TEEN	2.45E-06	1.15E-06	5.77E-06	5.98E-06	3.75E-06	3.36E-04	5.84E-07	0.00E+00
CHILD	2.89E-06	8.14E-07	1.35E-05	1.03E-05	6.19E-06	6.65E-04	8.97E-07	0.00E+00
INFANT	4.09E-06	1.45E-06	2.16E-05	2.10E-05	1.03E-05	1.62E-03	1.62E-06	0.00E+00
INHAL								
ADULT	3.28E-07	4.27E-06	3.57E-07	5.07E-07	4.37E-07	3.80E-05	5.62E-05	0.00E+00
TEEN	4.27E-07	4.98E-06	4.70E-07	6.87E-07	6.00E-07	4.84E-05	8.22E-05	0.00E+00
CHILD	4.83E-07	5.69E-06	6.07E-07	6.50E-07	5.61E-07	5.72E-05	6.67E-05	0.00E+00
INFANT	2.95E-07	3.88E-06	4.01E-07	5.32E-07	3.64E-07	5.25E-05	4.29E-05	0.00E+00

TABLE 7. DOSES TO MAXIMUM INDIVIDUAL (MREM), JANUARY-DECEMBER 2012 (Continued)

SPECIAL LOCATION NO. 5 A Nearest Garden
AT 2.80 MILES NNW

ANNUAL BETA AIR DOSE = 8.63E-04 MILLRADS
ANNUAL GAMMA AIR DOSE = 1.36E-03 MILLRADS

PATHWAY	T.BODY	GI-TRACT	BONE	LIVER	KIDNEY	THYROID	LUNG	SKIN
PLUME	9.10E-04	9.10E-04	9.10E-04	9.10E-04	9.10E-04	9.10E-04	9.19E-04	1.82E-03
GROUND	9.36E-04	9.36E-04	9.36E-04	9.36E-04	9.36E-04	9.36E-04	9.36E-04	1.10E-03
VEGET								
ADULT	1.75E-05	1.28E-04	2.02E-05	1.26E-05	4.09E-06	3.97E-04	3.78E-07	0.00E+00
TEEN	2.63E-05	1.36E-04	2.93E-05	1.93E-05	6.18E-06	5.34E-04	6.93E-07	0.00E+00
CHILD	5.13E-05	8.93E-05	6.33E-05	3.04E-05	9.68E-06	1.02E-03	1.04E-06	0.00E+00
MEAT								
ADULT	4.37E-06	3.47E-05	7.08E-07	2.98E-06	6.39E-07	1.06E-05	9.59E-08	0.00E+00
TEEN	3.42E-06	1.87E-05	5.30E-07	2.32E-06	4.79E-07	7.71E-06	8.69E-08	0.00E+00
CHILD	5.27E-06	9.45E-06	8.83E-07	2.76E-06	5.55E-07	1.16E-05	9.90E-08	0.00E+00
COW MILK								
ADULT	3.68E-06	9.61E-06	3.43E-06	5.79E-06	4.11E-06	2.99E-04	1.75E-07	0.00E+00
TEEN	5.59E-06	1.13E-05	5.77E-06	9.93E-06	6.96E-06	4.74E-04	3.60E-07	0.00E+00
CHILD	1.00E-05	7.45E-06	1.30E-05	1.60E-05	1.10E-05	9.40E-04	5.56E-07	0.00E+00
INFANT	1.47E-05	1.65E-05	2.07E-05	3.10E-05	1.70E-05	2.28E-03	1.01E-06	0.00E+00
GOATMILK								
ADULT	3.72E-06	1.61E-06	5.64E-06	5.80E-06	3.62E-06	3.59E-04	4.83E-07	0.00E+00
TEEN	4.19E-06	1.97E-06	9.81E-06	1.02E-05	6.38E-06	5.69E-04	9.98E-07	0.00E+00
CHILD	4.92E-06	1.39E-06	2.29E-05	1.76E-05	1.05E-05	1.13E-03	1.53E-06	0.00E+00
INFANT	6.97E-06	2.47E-06	3.66E-05	3.58E-05	1.75E-05	2.74E-03	2.78E-06	0.00E+00
INHAL								
ADULT	4.71E-07	6.70E-06	5.08E-07	7.14E-07	6.14E-07	5.69E-05	8.68E-05	0.00E+00
TEEN	6.10E-07	7.92E-06	6.64E-07	9.64E-07	8.42E-07	7.24E-05	1.27E-04	0.00E+00
CHILD	6.85E-07	9.35E-06	8.54E-07	9.09E-07	7.87E-07	8.56E-05	1.03E-04	0.00E+00
INFANT	4.12E-07	6.33E-06	5.56E-07	7.34E-07	5.10E-07	7.86E-05	6.64E-05	0.00E+00

TABLE 8. DOSES TO POPULATION WITHIN 50 MILES, JANUARY-MARCH 2012

ALARA ANNUAL INTEGRATED POPULATION DOSE SUMMARY (PERSON-REM)

PATHWAY	T.BODY	GI-TRACT	BONE	LIVER	KIDNEY	THYROID	LUNG	SKIN
PLUME	2.65E-06	2.65E-06	2.65E-06	2.65E-06	2.65E-06	2.65E-06	2.68E-06	6.36E-06
	1.83%	1.58%	1.86%	1.82%	1.90%	.87%	1.68%	3.87%
GROUND	1.34E-04	1.34E-04	1.34E-04	1.34E-04	1.34E-04	1.34E-04	1.34E-04	1.58E-04
	92.65%	79.78%	94.23%	92.18%	96.04%	44.22%	84.01%	96.13%
INHAL	1.17E-07	8.91E-07	9.20E-08	1.67E-07	1.25E-07	1.58E-05	2.22E-05	0.00E+00
	.08%	.53%	.06%	.11%	.09%	5.21%	13.89%	.00%
VEGET	4.68E-06	2.07E-05	1.98E-06	3.88E-06	7.95E-07	1.77E-06	2.56E-07	0.00E+00
	3.24%	12.31%	1.39%	2.67%	.57%	.58%	.16%	.00%
COW MILK	2.03E-06	2.59E-06	3.34E-06	4.02E-06	1.88E-06	1.46E-04	3.96E-07	0.00E+00
	1.41%	1.54%	2.34%	2.76%	1.35%	48.12%	.25%	.00%
MEAT	1.16E-06	7.18E-06	1.60E-07	6.54E-07	8.09E-08	3.03E-06	2.19E-08	0.00E+00
	.80%	4.27%	.11%	.45%	.06%	1.00%	.01%	.00%
TOTAL	1.45E-04	1.68E-04	1.42E-04	1.45E-04	1.40E-04	3.03E-04	1.60E-04	1.64E-04

TABLE 9. DOSES TO POPULATION WITHIN 50 MILES, APRIL-JUNE 2012

ALARA ANNUAL INTEGRATED POPULATION DOSE SUMMARY (PERSON-REM)

PATHWAY	T.BODY	GI-TRACT	BONE	LIVER	KIDNEY	THYROID	LUNG	SKIN
PLUME	1.62E-06	1.62E-06	1.62E-06	1.62E-06	1.62E-06	1.62E-06	1.64E-06	3.50E-06
	.99%	.87%	1.00%	.97%	1.03%	.47%	.96%	1.92%
GROUND	1.52E-04	1.52E-04	1.52E-04	1.52E-04	1.52E-04	1.52E-04	1.52E-04	1.79E-04
	92.80%	81.32%	93.21%	91.11%	96.16%	43.88%	88.70%	98.08%
INHAL	1.04E-07	6.72E-07	9.75E-08	1.56E-07	1.15E-07	1.37E-05	1.65E-05	0.00E+00
	.06%	.36%	.06%	.09%	.07%	3.96%	9.66%	.00%
VEGET	5.65E-06	2.20E-05	3.43E-06	5.55E-06	1.32E-06	2.08E-06	4.49E-07	0.00E+00
	3.45%	11.80%	2.11%	3.33%	.84%	.60%	.26%	.00%
COW MILK	3.09E-06	2.82E-06	5.64E-06	6.66E-06	2.87E-06	1.73E-04	6.95E-07	0.00E+00
	1.89%	1.51%	3.46%	3.99%	1.82%	50.06%	.41%	.00%
MEAT	1.32E-06	7.73E-06	2.77E-07	8.32E-07	1.32E-07	3.57E-06	3.85E-08	0.00E+00
	.81%	4.14%	.17%	.50%	.08%	1.03%	.02%	.00%
TOTAL	1.64E-04	1.87E-04	1.63E-04	1.67E-04	1.58E-04	3.46E-04	1.71E-04	1.82E-04

TABLE 10. DOSES TO POPULATION WITHIN 50 MILES, JANUARY-JUNE 2012

ALARA ANNUAL INTEGRATED POPULATION DOSE SUMMARY (PERSON-REM)

PATHWAY	T.BODY	GI-TRACT	BONE	LIVER	KIDNEY	THYROID	LUNG	SKIN
PLUME	4.35E-06	4.35E-06	4.35E-06	4.35E-06	4.35E-06	4.35E-06	4.40E-06	1.01E-05
	1.41%	1.23%	1.43%	1.40%	1.47%	.67%	1.33%	2.91%
GROUND	2.85E-04	2.85E-04	2.85E-04	2.85E-04	2.85E-04	2.85E-04	2.85E-04	3.35E-04
	92.69%	80.56%	93.64%	91.57%	96.06%	43.90%	86.34%	97.09%
INHAL	2.25E-07	1.57E-06	1.96E-07	3.31E-07	2.46E-07	3.00E-05	3.88E-05	0.00E+00
	.07%	.44%	.06%	.11%	.08%	4.62%	11.76%	.00%
VEGET	1.03E-05	4.26E-05	5.41E-06	9.42E-06	2.11E-06	3.85E-06	7.05E-07	0.00E+00
	3.35%	12.05%	1.78%	3.03%	.71%	.59%	.21%	.00%
COW MILK	5.12E-06	5.40E-06	8.97E-06	1.07E-05	4.76E-06	3.20E-04	1.09E-06	0.00E+00
	1.66%	1.52%	2.95%	3.43%	1.60%	49.20%	.33%	.00%
MEAT	2.47E-06	1.49E-05	4.37E-07	1.48E-06	2.12E-07	6.60E-06	6.05E-08	0.00E+00
	.80%	4.20%	.14%	.48%	.07%	1.02%	.02%	.00%
TOTAL	3.08E-04	3.54E-04	3.04E-04	3.11E-04	2.97E-04	6.50E-04	3.30E-04	3.45E-04

TABLE 11. DOSES TO POPULATION WITHIN 50 MILES, JULY-SEPTEMBER 2012

ALARA ANNUAL INTEGRATED POPULATION DOSE SUMMARY (PERSON-REM)

PATHWAY	T.BODY	GI-TRACT	BONE	LIVER	KIDNEY	THYROID	LUNG	SKIN
PLUME	3.26E-06	3.26E-06	3.26E-06	3.26E-06	3.26E-06	3.26E-06	3.29E-06	7.11E-06
	.80%	.67%	.74%	.81%	.82%	.22%	.68%	1.54%
GROUND	3.86E-04	3.86E-04	3.86E-04	3.86E-04	3.86E-04	3.86E-04	3.86E-04	4.54E-04
	94.49%	79.68%	88.09%	95.98%	97.14%	25.62%	79.41%	98.46%
INHAL	6.61E-07	9.19E-06	1.46E-06	1.07E-06	1.45E-06	1.90E-04	9.68E-05	0.00E+00
	.16%	1.90%	.33%	.27%	.36%	12.63%	19.91%	.00%
VEGET	1.14E-05	5.77E-05	3.97E-05	4.89E-06	3.96E-07	1.06E-05	5.56E-09	0.00E+00
	2.79%	11.91%	9.06%	1.21%	.10%	.70%	.00%	.00%
COW MILK	4.10E-06	8.25E-06	7.13E-06	5.40E-06	6.02E-06	8.99E-04	9.75E-09	0.00E+00
	1.00%	1.70%	1.63%	1.34%	1.51%	59.62%	.00%	.00%
MEAT	3.10E-06	2.01E-05	6.45E-07	1.58E-06	2.69E-07	1.83E-05	4.47E-10	0.00E+00
	.76%	4.14%	.15%	.39%	.07%	1.22%	.00%	.00%
TOTAL	4.09E-04	4.85E-04	4.38E-04	4.02E-04	3.98E-04	1.51E-03	4.86E-04	4.62E-04

TABLE 12. DOSES TO POPULATION WITHIN 50 MILES, OCTOBER-DECEMBER 2012

ALARA ANNUAL INTEGRATED POPULATION DOSE SUMMARY (PERSON-REM)

PATHWAY	T.BODY	GI-TRACT	BONE	LIVER	KIDNEY	THYROID	LUNG	SKIN
PLUME	1.19E-03	1.19E-03	1.19E-03	1.19E-03	1.19E-03	1.19E-03	1.20E-03	2.68E-03
	54.82%	50.39%	55.58%	55.01%	55.66%	45.19%	50.77%	71.06%
GROUND	9.27E-04	9.27E-04	9.27E-04	9.27E-04	9.27E-04	9.27E-04	9.27E-04	1.09E-03
	42.84%	39.38%	43.44%	42.99%	43.50%	35.32%	39.18%	28.94%
INHAL	8.96E-07	1.11E-05	4.47E-07	1.13E-06	6.20E-07	6.03E-05	2.37E-04	0.00E+00
	.04%	.47%	.02%	.05%	.03%	2.30%	10.03%	.00%
VEGET	2.82E-05	1.49E-04	1.10E-05	1.63E-05	2.76E-06	5.42E-06	2.32E-07	0.00E+00
	1.30%	6.32%	.52%	.76%	.13%	.21%	.01%	.00%
COW MILK	1.29E-05	2.52E-05	8.15E-06	1.94E-05	1.29E-05	4.37E-04	9.25E-08	0.00E+00
	.60%	1.07%	.38%	.90%	.61%	16.64%	.00%	.00%
MEAT	8.67E-06	5.56E-05	1.25E-06	6.15E-06	1.47E-06	9.13E-06	2.45E-07	0.00E+00
	.40%	2.36%	.06%	.29%	.07%	.35%	.01%	.00%
TOTAL	2.16E-03	2.35E-03	2.13E-03	2.16E-03	2.13E-03	2.62E-03	2.37E-03	3.77E-03

TABLE 13. DOSES TO POPULATION WITHIN 50 MILES, JULY-DECEMBER 2012

ALARA ANNUAL INTEGRATED POPULATION DOSE SUMMARY (PERSON-REM)

PATHWAY	T.BODY	GI-TRACT	BONE	LIVER	KIDNEY	THYROID	LUNG	SKIN
PLUME	1.27E-03	1.27E-03	1.27E-03	1.27E-03	1.27E-03	1.27E-03	1.29E-03	2.86E-03
	47.61%	43.30%	47.61%	47.87%	48.42%	30.06%	43.59%	64.68%
GROUND	1.33E-03	1.33E-03	1.33E-03	1.33E-03	1.33E-03	1.33E-03	1.33E-03	1.56E-03
	49.76%	45.25%	49.76%	50.02%	50.60%	31.42%	44.98%	35.32%
INHAL	1.55E-06	1.98E-05	1.90E-06	2.18E-06	2.02E-06	2.46E-04	3.36E-04	0.00E+00
	.06%	.68%	.07%	.08%	.08%	5.84%	11.41%	.00%
VEGET	3.96E-05	2.07E-04	5.10E-05	2.12E-05	3.16E-06	1.60E-05	2.38E-07	0.00E+00
	1.49%	7.05%	1.91%	.80%	.12%	.38%	.01%	.00%
COW MILK	1.70E-05	3.35E-05	1.53E-05	2.48E-05	1.89E-05	1.34E-03	1.03E-07	0.00E+00
	.64%	1.14%	.57%	.94%	.72%	31.65%	.00%	.00%
MEAT	1.18E-05	7.57E-05	1.90E-06	7.72E-06	1.74E-06	2.75E-05	2.46E-07	0.00E+00
	.44%	2.58%	.07%	.29%	.07%	.65%	.01%	.00%
TOTAL	2.66E-03	2.93E-03	2.66E-03	2.65E-03	2.62E-03	4.22E-03	2.95E-03	4.42E-03

TABLE 14. DOSES TO POPULATION WITHIN 50 MILES, JANUARY-DECEMBER 2012

ALARA ANNUAL INTEGRATED POPULATION DOSE SUMMARY (PERSON-REM)

PATHWAY	T.BODY	GI-TRACT	BONE	LIVER	KIDNEY	THYROID	LUNG	SKIN
PLUME	1.12E-03	1.12E-03	1.12E-03	1.12E-03	1.12E-03	1.12E-03	1.13E-03	2.52E-03
	39.75%	35.82%	39.79%	39.90%	40.54%	23.88%	37.03%	57.10%
GROUND	1.61E-03	1.61E-03	1.61E-03	1.61E-03	1.61E-03	1.61E-03	1.61E-03	1.89E-03
	57.13%	51.47%	57.18%	57.33%	58.26%	34.31%	52.54%	42.90%
INHAL	1.54E-06	1.81E-05	1.78E-06	2.20E-06	1.97E-06	2.38E-04	3.17E-04	0.00E+00
	.05%	.58%	.06%	.08%	.07%	5.08%	10.36%	.00%
VEGET	4.99E-05	2.49E-04	5.65E-05	3.07E-05	5.27E-06	2.00E-05	9.43E-07	0.00E+00
	1.77%	7.98%	2.01%	1.09%	.19%	.43%	.03%	.00%
COW MILK	2.22E-05	3.89E-05	2.43E-05	3.55E-05	2.37E-05	1.67E-03	1.19E-06	0.00E+00
	.79%	1.25%	.87%	1.27%	.86%	35.57%	.04%	.00%
MEAT	1.43E-05	9.06E-05	2.34E-06	9.21E-06	1.95E-06	3.43E-05	3.06E-07	0.00E+00
	.51%	2.90%	.08%	.33%	.07%	.73%	.01%	.00%
TOTAL	2.81E-03	3.12E-03	2.81E-03	2.80E-03	2.76E-03	4.68E-03	3.06E-03	4.41E-03

CARBON-14 GASEOUS EFFLUENT DOSE CALCULATIONS

Doses to the maximum individual resulting from the release of Carbon-14 in gaseous effluents from the Cooper Nuclear Station (CNS) were calculated using the GASPAR computer code. Four pathways were selected for individual dose calculations: the nearest site boundary for inhalation, nearest garden for vegetation ingestion, nearest animal for meat ingestion, and the nearest milk animal (cow). Based on the 2012 Land Use Census, there are no meat or milk animals identified within 5 miles of CNS. However, CNS maintains a virtual cow receptor at 3.5 miles north-northwest of the plant and conservatively includes this receptor in dose calculations.

Use of a normalized Carbon-14 source term and scaling factors based on the annual thermal gigawatts (GW_T) power generation were utilized to determine the quantity of Carbon-14 in the CNS gaseous effluent discharge for 2012. Specifically, the Boiling Water Reactor proxy production rate of 5.1 curies Carbon-14 per GW_T generation using the methodology described in EPRI, 2010 was the basis for the CNS total calculated emissions of 10.7 curies of Carbon-14 in 2012.

GASPAR implements the radiological dose models of Regulatory Guide 1.109 for determining the radiation exposure to man from four principal atmospheric exposure pathways: plume, ground, inhalation, and ingestion. Doses to the maximum individual are calculated as a function of age group and pathway for significant body organs.

Tables 15 through 21 present maximum individual doses. Note that the inhalation pathway was calculated at the closest site boundary receptor and was negligible for Carbon-14 and is not included in the tables. In addition, the doses presented were conservatively calculated based on the annual site X/Qs. These X/Qs result in doses approximately 20% higher than those calculated with the X/Qs based on growing season meteorology.

Additional assumptions and data used for input to the GASPAR code are described in a separate section of this appendix (see page C66).

TABLE 15. CARBON-14 DOSES TO MAXIMUM INDIVIDUAL (MREM), JANUARY-MARCH 2012

SPECIAL LOCATION NO. 4 A Nearest Cow
AT 3.50 MILES NNW

ANNUAL BETA AIR DOSE = 0.00E+00 MILLRADS
ANNUAL GAMMA AIR DOSE = 0.00E+00 MILLRADS

PATHWAY	T.BODY	GI-TRACT	BONE	LIVER	KIDNEY	THYROID	LUNG	SKIN
PLUME	0.00E+00	0.00E+00	0.00E+00	0.00E+00	0.00E+00	0.00E+00	0.00E+00	0.00E+00
GROUND	0.00E+00	0.00E+00	0.00E+00	0.00E+00	0.00E+00	0.00E+00	0.00E+00	0.00E+00
VEGET								
ADULT	6.56E-03	6.56E-03	3.28E-02	6.56E-03	6.56E-03	6.56E-03	6.56E-03	6.56E-03
TEEN	1.10E-02	1.10E-02	5.48E-02	1.10E-02	1.10E-02	1.10E-02	1.10E-02	1.10E-02
CHILD	2.67E-02	2.67E-02	1.33E-01	2.67E-02	2.67E-02	2.67E-02	2.67E-02	2.67E-02
MEAT								
ADULT	2.62E-03	2.62E-03	1.31E-02	2.62E-03	2.62E-03	2.62E-03	2.62E-03	2.62E-03
TEEN	2.21E-03	2.21E-03	1.11E-02	2.21E-03	2.21E-03	2.21E-03	2.21E-03	2.21E-03
CHILD	4.16E-03	4.16E-03	2.08E-02	4.16E-03	4.16E-03	4.16E-03	4.16E-03	4.16E-03
COW MILK								
ADULT	2.85E-03	2.85E-03	1.43E-02	2.85E-03	2.85E-03	2.85E-03	2.85E-03	2.85E-03
TEEN	5.27E-03	5.27E-03	2.63E-02	5.27E-03	5.27E-03	5.27E-03	5.27E-03	5.27E-03
CHILD	1.29E-02	1.29E-02	6.47E-02	1.29E-02	1.29E-02	1.29E-02	1.29E-02	1.29E-02
INFANT	2.71E-02	2.71E-02	1.27E-01	2.71E-02	2.71E-02	2.71E-02	2.71E-02	2.71E-02
GOATMILK								
ADULT	2.85E-03	2.85E-03	1.43E-02	2.85E-03	2.85E-03	2.85E-03	2.85E-03	2.85E-03
TEEN	5.27E-03	5.27E-03	2.63E-02	5.27E-03	5.27E-03	5.27E-03	5.27E-03	5.27E-03
CHILD	1.29E-02	1.29E-02	6.47E-02	1.29E-02	1.29E-02	1.29E-02	1.29E-02	1.29E-02
INFANT	2.71E-02	2.71E-02	1.27E-01	2.71E-02	2.71E-02	2.71E-02	2.71E-02	2.71E-02

TABLE 15. CARBON-14 DOSES TO MAXIMUM INDIVIDUAL (MREM), JANUARY-MARCH 2012 (Continued)

SPECIAL LOCATION NO. 5 A Nearest Garden
AT 2.80 MILES NNW

ANNUAL BETA AIR DOSE = 0.00E+00 MILLRADS
ANNUAL GAMMA AIR DOSE = 0.00E+00 MILLRADS

PATHWAY	T.BODY	GI-TRACT	BONE	LIVER	KIDNEY	THYROID	LUNG	SKIN
PLUME	0.00E+00	0.00E+00	0.00E+00	0.00E+00	0.00E+00	0.00E+00	0.00E+00	0.00E+00
GROUND	0.00E+00	0.00E+00	0.00E+00	0.00E+00	0.00E+00	0.00E+00	0.00E+00	0.00E+00
VEGET								
ADULT	9.83E-03	9.83E-03	4.92E-02	9.83E-03	9.83E-03	9.83E-03	9.83E-03	9.83E-03
TEEN	1.64E-02	1.64E-02	8.22E-02	1.64E-02	1.64E-02	1.64E-02	1.64E-02	1.64E-02
CHILD	4.00E-02	4.00E-02	2.00E-01	4.00E-02	4.00E-02	4.00E-02	4.00E-02	4.00E-02
MEAT								
ADULT	3.93E-03	3.93E-03	1.96E-02	3.93E-03	3.93E-03	3.93E-03	3.93E-03	3.93E-03
TEEN	3.32E-03	3.32E-03	1.66E-02	3.32E-03	3.32E-03	3.32E-03	3.32E-03	3.32E-03
CHILD	6.23E-03	6.23E-03	3.12E-02	6.23E-03	6.23E-03	6.23E-03	6.23E-03	6.23E-03
COW MILK								
ADULT	4.28E-03	4.28E-03	2.14E-02	4.28E-03	4.28E-03	4.28E-03	4.28E-03	4.28E-03
TEEN	7.90E-03	7.90E-03	3.95E-02	7.90E-03	7.90E-03	7.90E-03	7.90E-03	7.90E-03
CHILD	1.94E-02	1.94E-02	9.71E-02	1.94E-02	1.94E-02	1.94E-02	1.94E-02	1.94E-02
INFANT	4.06E-02	4.06E-02	1.90E-01	4.06E-02	4.06E-02	4.06E-02	4.06E-02	4.06E-02
GOATMILK								
ADULT	4.28E-03	4.28E-03	2.14E-02	4.28E-03	4.28E-03	4.28E-03	4.28E-03	4.28E-03
TEEN	7.90E-03	7.90E-03	3.95E-02	7.90E-03	7.90E-03	7.90E-03	7.90E-03	7.90E-03
CHILD	1.94E-02	1.94E-02	9.71E-02	1.94E-02	1.94E-02	1.94E-02	1.94E-02	1.94E-02
INFANT	4.06E-02	4.06E-02	1.90E-01	4.06E-02	4.06E-02	4.06E-02	4.06E-02	4.06E-02

TABLE 16. CARBON-14 DOSES TO MAXIMUM INDIVIDUAL (MREM), APRIL-JUNE 2012

SPECIAL LOCATION NO. 4 A Nearest Cow
AT 3.50 MILES NNW

ANNUAL BETA AIR DOSE = 0.00E+00 MILLRADS
ANNUAL GAMMA AIR DOSE = 0.00E+00 MILLRADS

PATHWAY	T.BODY	GI-TRACT	BONE	LIVER	KIDNEY	THYROID	LUNG	SKIN
PLUME	0.00E+00	0.00E+00	0.00E+00	0.00E+00	0.00E+00	0.00E+00	0.00E+00	0.00E+00
GROUND	0.00E+00	0.00E+00	0.00E+00	0.00E+00	0.00E+00	0.00E+00	0.00E+00	0.00E+00
VEGET								
ADULT	3.71E-03	3.71E-03	1.85E-02	3.71E-03	3.71E-03	3.71E-03	3.71E-03	3.71E-03
TEEN	6.20E-03	6.20E-03	3.10E-02	6.20E-03	6.20E-03	6.20E-03	6.20E-03	6.20E-03
CHILD	1.51E-02	1.51E-02	7.54E-02	1.51E-02	1.51E-02	1.51E-02	1.51E-02	1.51E-02
MEAT								
ADULT	1.48E-03	1.48E-03	7.40E-03	1.48E-03	1.48E-03	1.48E-03	1.48E-03	1.48E-03
TEEN	1.25E-03	1.25E-03	6.25E-03	1.25E-03	1.25E-03	1.25E-03	1.25E-03	1.25E-03
CHILD	2.35E-03	2.35E-03	1.17E-02	2.35E-03	2.35E-03	2.35E-03	2.35E-03	2.35E-03
COW MILK								
ADULT	1.61E-03	1.61E-03	8.07E-03	1.61E-03	1.61E-03	1.61E-03	1.61E-03	1.61E-03
TEEN	2.98E-03	2.98E-03	1.49E-02	2.98E-03	2.98E-03	2.98E-03	2.98E-03	2.98E-03
CHILD	7.32E-03	7.32E-03	3.66E-02	7.32E-03	7.32E-03	7.32E-03	7.32E-03	7.32E-03
INFANT	1.53E-02	1.53E-02	7.17E-02	1.53E-02	1.53E-02	1.53E-02	1.53E-02	1.53E-02
GOATMILK								
ADULT	1.61E-03	1.61E-03	8.07E-03	1.61E-03	1.61E-03	1.61E-03	1.61E-03	1.61E-03
TEEN	2.98E-03	2.98E-03	1.49E-02	2.98E-03	2.98E-03	2.98E-03	2.98E-03	2.98E-03
CHILD	7.32E-03	7.32E-03	3.66E-02	7.32E-03	7.32E-03	7.32E-03	7.32E-03	7.32E-03
INFANT	1.53E-02	1.53E-02	7.17E-02	1.53E-02	1.53E-02	1.53E-02	1.53E-02	1.53E-02

TABLE 16. CARBON-14 DOSES TO MAXIMUM INDIVIDUAL (MREM), APRIL-JUNE 2012 (Continued)

SPECIAL LOCATION NO. 5 A Nearest Garden
AT 1.30 MILES SW

ANNUAL BETA AIR DOSE = 0.00E+00 MILLRADS
ANNUAL GAMMA AIR DOSE = 0.00E+00 MILLRADS

PATHWAY	T.BODY	GI-TRACT	BONE	LIVER	KIDNEY	THYROID	LUNG	SKIN
PLUME	0.00E+00	0.00E+00	0.00E+00	0.00E+00	0.00E+00	0.00E+00	0.00E+00	0.00E+00
GROUND	0.00E+00	0.00E+00	0.00E+00	0.00E+00	0.00E+00	0.00E+00	0.00E+00	0.00E+00
VEGET								
ADULT	7.27E-03	7.27E-03	3.63E-02	7.27E-03	7.27E-03	7.27E-03	7.27E-03	7.27E-03
TEEN	1.22E-02	1.22E-02	6.08E-02	1.22E-02	1.22E-02	1.22E-02	1.22E-02	1.22E-02
CHILD	2.96E-02	2.96E-02	1.48E-01	2.96E-02	2.96E-02	2.96E-02	2.96E-02	2.96E-02
MEAT								
ADULT	2.90E-03	2.90E-03	1.45E-02	2.90E-03	2.90E-03	2.90E-03	2.90E-03	2.90E-03
TEEN	2.45E-03	2.45E-03	1.23E-02	2.45E-03	2.45E-03	2.45E-03	2.45E-03	2.45E-03
CHILD	4.61E-03	4.61E-03	2.30E-02	4.61E-03	4.61E-03	4.61E-03	4.61E-03	4.61E-03
COW MILK								
ADULT	3.16E-03	3.16E-03	1.58E-02	3.16E-03	3.16E-03	3.16E-03	3.16E-03	3.16E-03
TEEN	5.84E-03	5.84E-03	2.92E-02	5.84E-03	5.84E-03	5.84E-03	5.84E-03	5.84E-03
CHILD	1.44E-02	1.44E-02	7.18E-02	1.44E-02	1.44E-02	1.44E-02	1.44E-02	1.44E-02
INFANT	3.00E-02	3.00E-02	1.41E-01	3.00E-02	3.00E-02	3.00E-02	3.00E-02	3.00E-02
GOATMILK								
ADULT	3.16E-03	3.16E-03	1.58E-02	3.16E-03	3.16E-03	3.16E-03	3.16E-03	3.16E-03
TEEN	5.84E-03	5.84E-03	2.92E-02	5.84E-03	5.84E-03	5.84E-03	5.84E-03	5.84E-03
CHILD	1.44E-02	1.44E-02	7.18E-02	1.44E-02	1.44E-02	1.44E-02	1.44E-02	1.44E-02
INFANT	3.00E-02	3.00E-02	1.41E-01	3.00E-02	3.00E-02	3.00E-02	3.00E-02	3.00E-02

TABLE 17. CARBON-14 DOSES TO MAXIMUM INDIVIDUAL (MREM), JANUARY-JUNE 2012

SPECIAL LOCATION NO. 4 A Nearest Cow
AT 3.50 MILES NNW

ANNUAL BETA AIR DOSE = 0.00E+00 MILLRADS
ANNUAL GAMMA AIR DOSE = 0.00E+00 MILLRADS

PATHWAY	T.BODY	GI-TRACT	BONE	LIVER	KIDNEY	THYROID	LUNG	SKIN
PLUME	0.00E+00	0.00E+00	0.00E+00	0.00E+00	0.00E+00	0.00E+00	0.00E+00	0.00E+00
GROUND	0.00E+00	0.00E+00	0.00E+00	0.00E+00	0.00E+00	0.00E+00	0.00E+00	0.00E+00
VEGET								
ADULT	1.03E-02	1.03E-02	5.13E-02	1.03E-02	1.03E-02	1.03E-02	1.03E-02	1.03E-02
TEEN	1.72E-02	1.72E-02	8.58E-02	1.72E-02	1.72E-02	1.72E-02	1.72E-02	1.72E-02
CHILD	4.18E-02	4.18E-02	2.09E-01	4.18E-02	4.18E-02	4.18E-02	4.18E-02	4.18E-02
MEAT								
ADULT	4.10E-03	4.10E-03	2.05E-02	4.10E-03	4.10E-03	4.10E-03	4.10E-03	4.10E-03
TEEN	3.46E-03	3.46E-03	1.73E-02	3.46E-03	3.46E-03	3.46E-03	3.46E-03	3.46E-03
CHILD	6.50E-03	6.50E-03	3.25E-02	6.50E-03	6.50E-03	6.50E-03	6.50E-03	6.50E-03
COW MILK								
ADULT	4.47E-03	4.47E-03	2.23E-02	4.47E-03	4.47E-03	4.47E-03	4.47E-03	4.47E-03
TEEN	8.24E-03	8.24E-03	4.12E-02	8.24E-03	8.24E-03	8.24E-03	8.24E-03	8.24E-03
CHILD	2.03E-02	2.03E-02	1.01E-01	2.03E-02	2.03E-02	2.03E-02	2.03E-02	2.03E-02
INFANT	4.24E-02	4.24E-02	1.98E-01	4.24E-02	4.24E-02	4.24E-02	4.24E-02	4.24E-02
GOATMILK								
ADULT	4.47E-03	4.47E-03	2.23E-02	4.47E-03	4.47E-03	4.47E-03	4.47E-03	4.47E-03
TEEN	8.24E-03	8.24E-03	4.12E-02	8.24E-03	8.24E-03	8.24E-03	8.24E-03	8.24E-03
CHILD	2.03E-02	2.03E-02	1.01E-01	2.03E-02	2.03E-02	2.03E-02	2.03E-02	2.03E-02
INFANT	4.24E-02	4.24E-02	1.98E-01	4.24E-02	4.24E-02	4.24E-02	4.24E-02	4.24E-02

TABLE 17. CARBON-14 DOSES TO MAXIMUM INDIVIDUAL (MREM), JANUARY-JUNE 2012 (Continued)

SPECIAL LOCATION NO. 5 A Nearest Garden
AT 2.80 MILES NNW

ANNUAL BETA AIR DOSE = 0.00E+00 MILLRADS
ANNUAL GAMMA AIR DOSE = 0.00E+00 MILLRADS

PATHWAY	T.BODY	GI-TRACT	BONE	LIVER	KIDNEY	THYROID	LUNG	SKIN
PLUME	0.00E+00	0.00E+00	0.00E+00	0.00E+00	0.00E+00	0.00E+00	0.00E+00	0.00E+00
GROUND	0.00E+00	0.00E+00	0.00E+00	0.00E+00	0.00E+00	0.00E+00	0.00E+00	0.00E+00
VEGET								
ADULT	1.54E-02	1.54E-02	7.70E-02	1.54E-02	1.54E-02	1.54E-02	1.54E-02	1.54E-02
TEEN	2.57E-02	2.57E-02	1.29E-01	2.57E-02	2.57E-02	2.57E-02	2.57E-02	2.57E-02
CHILD	6.27E-02	6.27E-02	3.13E-01	6.27E-02	6.27E-02	6.27E-02	6.27E-02	6.27E-02
MEAT								
ADULT	6.14E-03	6.14E-03	3.07E-02	6.14E-03	6.14E-03	6.14E-03	6.14E-03	6.14E-03
TEEN	5.19E-03	5.19E-03	2.59E-02	5.19E-03	5.19E-03	5.19E-03	5.19E-03	5.19E-03
CHILD	9.76E-03	9.76E-03	4.88E-02	9.76E-03	9.76E-03	9.76E-03	9.76E-03	9.76E-03
COW MILK								
ADULT	6.70E-03	6.70E-03	3.35E-02	6.70E-03	6.70E-03	6.70E-03	6.70E-03	6.70E-03
TEEN	1.24E-02	1.24E-02	6.18E-02	1.24E-02	1.24E-02	1.24E-02	1.24E-02	1.24E-02
CHILD	3.04E-02	3.04E-02	1.52E-01	3.04E-02	3.04E-02	3.04E-02	3.04E-02	3.04E-02
INFANT	6.36E-02	6.36E-02	2.98E-01	6.36E-02	6.36E-02	6.36E-02	6.36E-02	6.36E-02
GOATMILK								
ADULT	6.70E-03	6.70E-03	3.35E-02	6.70E-03	6.70E-03	6.70E-03	6.70E-03	6.70E-03
TEEN	1.24E-02	1.24E-02	6.18E-02	1.24E-02	1.24E-02	1.24E-02	1.24E-02	1.24E-02
CHILD	3.04E-02	3.04E-02	1.52E-01	3.04E-02	3.04E-02	3.04E-02	3.04E-02	3.04E-02
INFANT	6.36E-02	6.36E-02	2.98E-01	6.36E-02	6.36E-02	6.36E-02	6.36E-02	6.36E-02

TABLE 18. CARBON-14 DOSES TO MAXIMUM INDIVIDUAL (MREM), JULY-SEPTEMBER 2012

SPECIAL LOCATION NO. 4 A Nearest Cow
AT 3.50 MILES NNW

ANNUAL BETA AIR DOSE = 0.00E+00 MILLRADS
ANNUAL GAMMA AIR DOSE = 0.00E+00 MILLRADS

PATHWAY	T.BODY	GI-TRACT	BONE	LIVER	KIDNEY	THYROID	LUNG	SKIN
PLUME	0.00E+00	0.00E+00	0.00E+00	0.00E+00	0.00E+00	0.00E+00	0.00E+00	0.00E+00
GROUND	0.00E+00	0.00E+00	0.00E+00	0.00E+00	0.00E+00	0.00E+00	0.00E+00	0.00E+00
VEGET								
ADULT	9.08E-03	9.08E-03	4.54E-02	9.08E-03	9.08E-03	9.08E-03	9.08E-03	9.08E-03
TEEN	1.52E-02	1.52E-02	7.59E-02	1.52E-02	1.52E-02	1.52E-02	1.52E-02	1.52E-02
CHILD	3.70E-02	3.70E-02	1.85E-01	3.70E-02	3.70E-02	3.70E-02	3.70E-02	3.70E-02
MEAT								
ADULT	3.62E-03	3.62E-03	1.81E-02	3.62E-03	3.62E-03	3.62E-03	3.62E-03	3.62E-03
TEEN	3.06E-03	3.06E-03	1.53E-02	3.06E-03	3.06E-03	3.06E-03	3.06E-03	3.06E-03
CHILD	5.76E-03	5.76E-03	2.88E-02	5.76E-03	5.76E-03	5.76E-03	5.76E-03	5.76E-03
COW MILK								
ADULT	3.95E-03	3.95E-03	1.98E-02	3.95E-03	3.95E-03	3.95E-03	3.95E-03	3.95E-03
TEEN	7.29E-03	7.29E-03	3.65E-02	7.29E-03	7.29E-03	7.29E-03	7.29E-03	7.29E-03
CHILD	1.79E-02	1.79E-02	8.97E-02	1.79E-02	1.79E-02	1.79E-02	1.79E-02	1.79E-02
INFANT	3.75E-02	3.75E-02	1.76E-01	3.75E-02	3.75E-02	3.75E-02	3.75E-02	3.75E-02
GOATMILK								
ADULT	3.95E-03	3.95E-03	1.98E-02	3.95E-03	3.95E-03	3.95E-03	3.95E-03	3.95E-03
TEEN	7.29E-03	7.29E-03	3.65E-02	7.29E-03	7.29E-03	7.29E-03	7.29E-03	7.29E-03
CHILD	1.79E-02	1.79E-02	8.97E-02	1.79E-02	1.79E-02	1.79E-02	1.79E-02	1.79E-02
INFANT	3.75E-02	3.75E-02	1.76E-01	3.75E-02	3.75E-02	3.75E-02	3.75E-02	3.75E-02

TABLE 18. CARBON-14 DOSES TO MAXIMUM INDIVIDUAL (MREM), JULY-SEPTEMBER 2012 (Continued)

SPECIAL LOCATION NO. 5 A Nearest Garden
AT 1.30 MILES SW

ANNUAL BETA AIR DOSE = 0.00E+00 MILLRADS
ANNUAL GAMMA AIR DOSE = 0.00E+00 MILLRADS

PATHWAY	T.BODY	GI-TRACT	BONE	LIVER	KIDNEY	THYROID	LUNG	SKIN
PLUME	0.00E+00	0.00E+00	0.00E+00	0.00E+00	0.00E+00	0.00E+00	0.00E+00	0.00E+00
GROUND	0.00E+00	0.00E+00	0.00E+00	0.00E+00	0.00E+00	0.00E+00	0.00E+00	0.00E+00
VEGET								
ADULT	1.43E-02	1.43E-02	7.13E-02	1.43E-02	1.43E-02	1.43E-02	1.43E-02	1.43E-02
TEEN	2.39E-02	2.39E-02	1.19E-01	2.39E-02	2.39E-02	2.39E-02	2.39E-02	2.39E-02
CHILD	5.81E-02	5.81E-02	2.90E-01	5.81E-02	5.81E-02	5.81E-02	5.81E-02	5.81E-02
MEAT								
ADULT	5.70E-03	5.70E-03	2.85E-02	5.70E-03	5.70E-03	5.70E-03	5.70E-03	5.70E-03
TEEN	4.81E-03	4.81E-03	2.41E-02	4.81E-03	4.81E-03	4.81E-03	4.81E-03	4.81E-03
CHILD	9.04E-03	9.04E-03	4.52E-02	9.04E-03	9.04E-03	9.04E-03	9.04E-03	9.04E-03
COW MILK								
ADULT	6.21E-03	6.21E-03	3.11E-02	6.21E-03	6.21E-03	6.21E-03	6.21E-03	6.21E-03
TEEN	1.15E-02	1.15E-02	5.73E-02	1.15E-02	1.15E-02	1.15E-02	1.15E-02	1.15E-02
CHILD	2.82E-02	2.82E-02	1.41E-01	2.82E-02	2.82E-02	2.82E-02	2.82E-02	2.82E-02
INFANT	5.89E-02	5.89E-02	2.76E-01	5.89E-02	5.89E-02	5.89E-02	5.89E-02	5.89E-02
GOATMILK								
ADULT	6.21E-03	6.21E-03	3.11E-02	6.21E-03	6.21E-03	6.21E-03	6.21E-03	6.21E-03
TEEN	1.15E-02	1.15E-02	5.73E-02	1.15E-02	1.15E-02	1.15E-02	1.15E-02	1.15E-02
CHILD	2.82E-02	2.82E-02	1.41E-01	2.82E-02	2.82E-02	2.82E-02	2.82E-02	2.82E-02
INFANT	5.89E-02	5.89E-02	2.76E-01	5.89E-02	5.89E-02	5.89E-02	5.89E-02	5.89E-02

TABLE 19. CARBON-14 DOSES TO MAXIMUM INDIVIDUAL (MREM), OCTOBER-DECEMBER 2012

SPECIAL LOCATION NO. 4 A Nearest Cow
AT 3.50 MILES NNW

ANNUAL BETA AIR DOSE = 0.00E+00 MILLRADS
ANNUAL GAMMA AIR DOSE = 0.00E+00 MILLRADS

PATHWAY	T.BODY	GI-TRACT	BONE	LIVER	KIDNEY	THYROID	LUNG	SKIN
PLUME	0.00E+00	0.00E+00	0.00E+00	0.00E+00	0.00E+00	0.00E+00	0.00E+00	0.00E+00
GROUND	0.00E+00	0.00E+00	0.00E+00	0.00E+00	0.00E+00	0.00E+00	0.00E+00	0.00E+00
VEGET								
ADULT	8.65E-03	8.65E-03	4.32E-02	8.65E-03	8.65E-03	8.65E-03	8.65E-03	8.65E-03
TEEN	1.45E-02	1.45E-02	7.23E-02	1.45E-02	1.45E-02	1.45E-02	1.45E-02	1.45E-02
CHILD	3.52E-02	3.52E-02	1.76E-01	3.52E-02	3.52E-02	3.52E-02	3.52E-02	3.52E-02
MEAT								
ADULT	3.45E-03	3.45E-03	1.73E-02	3.45E-03	3.45E-03	3.45E-03	3.45E-03	3.45E-03
TEEN	2.92E-03	2.92E-03	1.46E-02	2.92E-03	2.92E-03	2.92E-03	2.92E-03	2.92E-03
CHILD	5.48E-03	5.48E-03	2.74E-02	5.48E-03	5.48E-03	5.48E-03	5.48E-03	5.48E-03
COW MILK								
ADULT	3.77E-03	3.77E-03	1.88E-02	3.77E-03	3.77E-03	3.77E-03	3.77E-03	3.77E-03
TEEN	6.95E-03	6.95E-03	3.47E-02	6.95E-03	6.95E-03	6.95E-03	6.95E-03	6.95E-03
CHILD	1.71E-02	1.71E-02	8.54E-02	1.71E-02	1.71E-02	1.71E-02	1.71E-02	1.71E-02
INFANT	3.57E-02	3.57E-02	1.67E-01	3.57E-02	3.57E-02	3.57E-02	3.57E-02	3.57E-02
GOATMILK								
ADULT	3.77E-03	3.77E-03	1.88E-02	3.77E-03	3.77E-03	3.77E-03	3.77E-03	3.77E-03
TEEN	6.95E-03	6.95E-03	3.47E-02	6.95E-03	6.95E-03	6.95E-03	6.95E-03	6.95E-03
CHILD	1.71E-02	1.71E-02	8.54E-02	1.71E-02	1.71E-02	1.71E-02	1.71E-02	1.71E-02
INFANT	3.57E-02	3.57E-02	1.67E-01	3.57E-02	3.57E-02	3.57E-02	3.57E-02	3.57E-02

TABLE 19. CARBON-14 DOSES TO MAXIMUM INDIVIDUAL (MREM), OCTOBER-DECEMBER 2012 (Continued)

SPECIAL LOCATION NO. 5 A Nearest Garden
AT 2.80 MILES NNW

ANNUAL BETA AIR DOSE = 0.00E+00 MILLRADS
ANNUAL GAMMA AIR DOSE = 0.00E+00 MILLRADS

PATHWAY	T.BODY	GI-TRACT	BONE	LIVER	KIDNEY	THYROID	LUNG	SKIN
PLUME	0.00E+00	0.00E+00	0.00E+00	0.00E+00	0.00E+00	0.00E+00	0.00E+00	0.00E+00
GROUND	0.00E+00	0.00E+00	0.00E+00	0.00E+00	0.00E+00	0.00E+00	0.00E+00	0.00E+00
VEGET								
ADULT	1.31E-02	1.31E-02	6.56E-02	1.31E-02	1.31E-02	1.31E-02	1.31E-02	1.31E-02
TEEN	2.19E-02	2.19E-02	1.10E-01	2.19E-02	2.19E-02	2.19E-02	2.19E-02	2.19E-02
CHILD	5.34E-02	5.34E-02	2.67E-01	5.34E-02	5.34E-02	5.34E-02	5.34E-02	5.34E-02
MEAT								
ADULT	5.23E-03	5.23E-03	2.62E-02	5.23E-03	5.23E-03	5.23E-03	5.23E-03	5.23E-03
TEEN	4.42E-03	4.42E-03	2.21E-02	4.42E-03	4.42E-03	4.42E-03	4.42E-03	4.42E-03
CHILD	8.31E-03	8.31E-03	4.16E-02	8.31E-03	8.31E-03	8.31E-03	8.31E-03	8.31E-03
COW MILK								
ADULT	5.71E-03	5.71E-03	2.86E-02	5.71E-03	5.71E-03	5.71E-03	5.71E-03	5.71E-03
TEEN	1.05E-02	1.05E-02	5.27E-02	1.05E-02	1.05E-02	1.05E-02	1.05E-02	1.05E-02
CHILD	2.59E-02	2.59E-02	1.30E-01	2.59E-02	2.59E-02	2.59E-02	2.59E-02	2.59E-02
INFANT	5.42E-02	5.42E-02	2.54E-01	5.42E-02	5.42E-02	5.42E-02	5.42E-02	5.42E-02
GOATMILK								
ADULT	5.71E-03	5.71E-03	2.86E-02	5.71E-03	5.71E-03	5.71E-03	5.71E-03	5.71E-03
TEEN	1.05E-02	1.05E-02	5.27E-02	1.05E-02	1.05E-02	1.05E-02	1.05E-02	1.05E-02
CHILD	2.59E-02	2.59E-02	1.30E-01	2.59E-02	2.59E-02	2.59E-02	2.59E-02	2.59E-02
INFANT	5.42E-02	5.42E-02	2.54E-01	5.42E-02	5.42E-02	5.42E-02	5.42E-02	5.42E-02

TABLE 20. CARBON-14 DOSES TO MAXIMUM INDIVIDUAL (MREM), JULY-DECEMBER 2012

SPECIAL LOCATION NO. 4 A Nearest Cow
AT 3.50 MILES NNW

ANNUAL BETA AIR DOSE = 0.00E+00 MILLRADS
ANNUAL GAMMA AIR DOSE = 0.00E+00 MILLRADS

PATHWAY	T.BODY	GI-TRACT	BONE	LIVER	KIDNEY	THYROID	LUNG	SKIN
PLUME	0.00E+00	0.00E+00	0.00E+00	0.00E+00	0.00E+00	0.00E+00	0.00E+00	0.00E+00
GROUND	0.00E+00	0.00E+00	0.00E+00	0.00E+00	0.00E+00	0.00E+00	0.00E+00	0.00E+00
VEGET								
ADULT	1.79E-02	1.79E-02	8.94E-02	1.79E-02	1.79E-02	1.79E-02	1.79E-02	1.79E-02
TEEN	2.99E-02	2.99E-02	1.49E-01	2.99E-02	2.99E-02	2.99E-02	2.99E-02	2.99E-02
CHILD	7.28E-02	7.28E-02	3.64E-01	7.28E-02	7.28E-02	7.28E-02	7.28E-02	7.28E-02
MEAT								
ADULT	7.13E-03	7.13E-03	3.57E-02	7.13E-03	7.13E-03	7.13E-03	7.13E-03	7.13E-03
TEEN	6.03E-03	6.03E-03	3.01E-02	6.03E-03	6.03E-03	6.03E-03	6.03E-03	6.03E-03
CHILD	1.13E-02	1.13E-02	5.66E-02	1.13E-02	1.13E-02	1.13E-02	1.13E-02	1.13E-02
COW MILK								
ADULT	7.78E-03	7.78E-03	3.89E-02	7.78E-03	7.78E-03	7.78E-03	7.78E-03	7.78E-03
TEEN	1.44E-02	1.44E-02	7.18E-02	1.44E-02	1.44E-02	1.44E-02	1.44E-02	1.44E-02
CHILD	3.53E-02	3.53E-02	1.76E-01	3.53E-02	3.53E-02	3.53E-02	3.53E-02	3.53E-02
INFANT	7.38E-02	7.38E-02	3.46E-01	7.38E-02	7.38E-02	7.38E-02	7.38E-02	7.38E-02
GOATMILK								
ADULT	7.78E-03	7.78E-03	3.89E-02	7.78E-03	7.78E-03	7.78E-03	7.78E-03	7.78E-03
TEEN	1.44E-02	1.44E-02	7.18E-02	1.44E-02	1.44E-02	1.44E-02	1.44E-02	1.44E-02
CHILD	3.53E-02	3.53E-02	1.76E-01	3.53E-02	3.53E-02	3.53E-02	3.53E-02	3.53E-02
INFANT	7.38E-02	7.38E-02	3.46E-01	7.38E-02	7.38E-02	7.38E-02	7.38E-02	7.38E-02

TABLE 20. CARBON-14 DOSES TO MAXIMUM INDIVIDUAL (MREM), JULY-DECEMBER 2012(Continued)

SPECIAL LOCATION NO. 5 A Nearest Garden
AT 2.80 MILES NNW

ANNUAL BETA AIR DOSE = 0.00E+00 MILLRADS
ANNUAL GAMMA AIR DOSE = 0.00E+00 MILLRADS

PATHWAY	T.BODY	GI-TRACT	BONE	LIVER	KIDNEY	THYROID	LUNG	SKIN
PLUME	0.00E+00	0.00E+00	0.00E+00	0.00E+00	0.00E+00	0.00E+00	0.00E+00	0.00E+00
GROUND	0.00E+00	0.00E+00	0.00E+00	0.00E+00	0.00E+00	0.00E+00	0.00E+00	0.00E+00
VEGET								
ADULT	2.71E-02	2.71E-02	1.35E-01	2.71E-02	2.71E-02	2.71E-02	2.71E-02	2.71E-02
TEEN	4.53E-02	4.53E-02	2.27E-01	4.53E-02	4.53E-02	4.53E-02	4.53E-02	4.53E-02
CHILD	1.10E-01	1.10E-01	5.52E-01	1.10E-01	1.10E-01	1.10E-01	1.10E-01	1.10E-01
MEAT								
ADULT	1.08E-02	1.08E-02	5.41E-02	1.08E-02	1.08E-02	1.08E-02	1.08E-02	1.08E-02
TEEN	9.14E-03	9.14E-03	4.57E-02	9.14E-03	9.14E-03	9.14E-03	9.14E-03	9.14E-03
CHILD	1.72E-02	1.72E-02	8.59E-02	1.72E-02	1.72E-02	1.72E-02	1.72E-02	1.72E-02
COW MILK								
ADULT	1.18E-02	1.18E-02	5.90E-02	1.18E-02	1.18E-02	1.18E-02	1.18E-02	1.18E-02
TEEN	2.18E-02	2.18E-02	1.09E-01	2.18E-02	2.18E-02	2.18E-02	2.18E-02	2.18E-02
CHILD	5.35E-02	5.35E-02	2.68E-01	5.35E-02	5.35E-02	5.35E-02	5.35E-02	5.35E-02
INFANT	1.12E-01	1.12E-01	5.24E-01	1.12E-01	1.12E-01	1.12E-01	1.12E-01	1.12E-01
GOATMILK								
ADULT	1.18E-02	1.18E-02	5.90E-02	1.18E-02	1.18E-02	1.18E-02	1.18E-02	1.18E-02
TEEN	2.18E-02	2.18E-02	1.09E-01	2.18E-02	2.18E-02	2.18E-02	2.18E-02	2.18E-02
CHILD	5.35E-02	5.35E-02	2.68E-01	5.35E-02	5.35E-02	5.35E-02	5.35E-02	5.35E-02
INFANT	1.12E-01	1.12E-01	5.24E-01	1.12E-01	1.12E-01	1.12E-01	1.12E-01	1.12E-01

TABLE 21. CARBON-14 DOSES TO MAXIMUM INDIVIDUAL (MREM), JANUARY-DECEMBER 2012

SPECIAL LOCATION NO. 4 A Nearest Cow
AT 3.50 MILES NNW

ANNUAL BETA AIR DOSE = 0.00E+00 MILLRADS
ANNUAL GAMMA AIR DOSE = 0.00E+00 MILLRADS

PATHWAY	T.BODY	GI-TRACT	BONE	LIVER	KIDNEY	THYROID	LUNG	SKIN
PLUME	0.00E+00	0.00E+00	0.00E+00	0.00E+00	0.00E+00	0.00E+00	0.00E+00	0.00E+00
GROUND	0.00E+00	0.00E+00	0.00E+00	0.00E+00	0.00E+00	0.00E+00	0.00E+00	0.00E+00
VEGET								
ADULT	2.80E-02	2.80E-02	1.40E-01	2.80E-02	2.80E-02	2.80E-02	2.80E-02	2.80E-02
TEEN	4.68E-02	4.68E-02	2.34E-01	4.68E-02	4.68E-02	4.68E-02	4.68E-02	4.68E-02
CHILD	1.14E-01	1.14E-01	5.70E-01	1.14E-01	1.14E-01	1.14E-01	1.14E-01	1.14E-01
MEAT								
ADULT	1.12E-02	1.12E-02	5.59E-02	1.12E-02	1.12E-02	1.12E-02	1.12E-02	1.12E-02
TEEN	9.44E-03	9.44E-03	4.72E-02	9.44E-03	9.44E-03	9.44E-03	9.44E-03	9.44E-03
CHILD	1.77E-02	1.77E-02	8.87E-02	1.77E-02	1.77E-02	1.77E-02	1.77E-02	1.77E-02
COW MILK								
ADULT	1.22E-02	1.22E-02	6.09E-02	1.22E-02	1.22E-02	1.22E-02	1.22E-02	1.22E-02
TEEN	2.25E-02	2.25E-02	1.12E-01	2.25E-02	2.25E-02	2.25E-02	2.25E-02	2.25E-02
CHILD	5.53E-02	5.53E-02	2.76E-01	5.53E-02	5.53E-02	5.53E-02	5.53E-02	5.53E-02
INFANT	1.16E-01	1.16E-01	5.41E-01	1.16E-01	1.16E-01	1.16E-01	1.16E-01	1.16E-01
GOATMILK								
ADULT	1.22E-02	1.22E-02	6.09E-02	1.22E-02	1.22E-02	1.22E-02	1.22E-02	1.22E-02
TEEN	2.25E-02	2.25E-02	1.12E-01	2.25E-02	2.25E-02	2.25E-02	2.25E-02	2.25E-02
CHILD	5.53E-02	5.53E-02	2.76E-01	5.53E-02	5.53E-02	5.53E-02	5.53E-02	5.53E-02
INFANT	1.16E-01	1.16E-01	5.41E-01	1.16E-01	1.16E-01	1.16E-01	1.16E-01	1.16E-01

TABLE 21. CARBON-14 DOSES TO MAXIMUM INDIVIDUAL (MREM), JANUARY-DECEMBER 2012(Continued)

SPECIAL LOCATION NO. 5 A Nearest Garden
AT 2.80 MILES NNW

ANNUAL BETA AIR DOSE = 0.00E+00 MILLRADS
ANNUAL GAMMA AIR DOSE = 0.00E+00 MILLRADS

PATHWAY	T.BODY	GI-TRACT	BONE	LIVER	KIDNEY	THYROID	LUNG	SKIN
PLUME	0.00E+00	0.00E+00	0.00E+00	0.00E+00	0.00E+00	0.00E+00	0.00E+00	0.00E+00
GROUND	0.00E+00	0.00E+00	0.00E+00	0.00E+00	0.00E+00	0.00E+00	0.00E+00	0.00E+00
VEGET								
ADULT	4.23E-02	4.23E-02	2.11E-01	4.23E-02	4.23E-02	4.23E-02	4.23E-02	4.23E-02
TEEN	7.07E-02	7.07E-02	3.53E-01	7.07E-02	7.07E-02	7.07E-02	7.07E-02	7.07E-02
CHILD	1.72E-01	1.72E-01	8.60E-01	1.72E-01	1.72E-01	1.72E-01	1.72E-01	1.72E-01
MEAT								
ADULT	1.69E-02	1.69E-02	8.43E-02	1.69E-02	1.69E-02	1.69E-02	1.69E-02	1.69E-02
TEEN	1.43E-02	1.43E-02	7.13E-02	1.43E-02	1.43E-02	1.43E-02	1.43E-02	1.43E-02
CHILD	2.68E-02	2.68E-02	1.34E-01	2.68E-02	2.68E-02	2.68E-02	2.68E-02	2.68E-02
COW MILK								
ADULT	1.84E-02	1.84E-02	9.20E-02	1.84E-02	1.84E-02	1.84E-02	1.84E-02	1.84E-02
TEEN	3.39E-02	3.39E-02	1.70E-01	3.39E-02	3.39E-02	3.39E-02	3.39E-02	3.39E-02
CHILD	8.35E-02	8.35E-02	4.17E-01	8.35E-02	8.35E-02	8.35E-02	8.35E-02	8.35E-02
INFANT	1.75E-01	1.75E-01	8.17E-01	1.75E-01	1.75E-01	1.75E-01	1.75E-01	1.75E-01
GOATMILK								
ADULT	1.84E-02	1.84E-02	9.20E-02	1.84E-02	1.84E-02	1.84E-02	1.84E-02	1.84E-02
TEEN	3.39E-02	3.39E-02	1.70E-01	3.39E-02	3.39E-02	3.39E-02	3.39E-02	3.39E-02
CHILD	8.35E-02	8.35E-02	4.17E-01	8.35E-02	8.35E-02	8.35E-02	8.35E-02	8.35E-02
INFANT	1.75E-01	1.75E-01	8.17E-01	1.75E-01	1.75E-01	1.75E-01	1.75E-01	1.75E-01

DOSE CALCULATION MODELS

To evaluate the radiological consequences of the routine release of liquid and gaseous effluents from the Cooper Nuclear Station, two computer codes were used: LADTAP II for liquid doses and GASPAR for gaseous doses. Both of these computer codes implement the dose calculational methodologies of U.S. NRC Regulatory Guide 1.109, Revision 1.

Source terms for each quarter are combined with station-specific demographic data and either hydrological dilution factors, for liquid dose calculations, or atmospheric diffusion estimates, for gaseous dose calculations.

For liquid dose calculations, the hydrological dilution factors used for input to LADTAP II, as well as other input parameters, are listed in Table 22. Other inputs not specifically listed in this table are taken from Regulatory Guide 1.109, Revision 1. Semiannual doses are obtained by summing the contributions from the appropriate quarters.

For gaseous dose calculations, atmospheric diffusion estimates are obtained from the reduction and processing of onsite meteorological data, as described in Appendix B. Source terms for the semiannual period are obtained by summing source terms for the appropriate quarters. Additional input to GASPAR includes the following station-supplied data:

- 0 to 50 mile population distribution
- 0 to 50 mile meat, milk, and vegetable distributions
- Absolute humidity at Cooper Nuclear Station (14.61 g/m^3)
- The fraction of the year that the vegetables are grown (0.5)
- The fraction of the daily feed intake derived from pasture for milk and meat animals (0.5)

Other values used for input to GASPAR are default values from Regulatory Guide 1.109, Rev. 1.

TABLE 22. Values of Parameters Used to Make Dose Estimates Resulting From Liquid Discharges at Cooper Nuclear Station January-December 2012

Parameter	Values Assigned	
	Individual	Population
Cooling flow rate (cfs) * (Average daily value)	Q1 NR	NR
	Q2 NR	NR
	Q3 NR	NR
	Q4 NR	NR
Dilution factor*	Q1 NR	NR
	Q2 NR	NR
	Q3 NR	NR
	Q4 NR	NR
Holding time:		
Fish	24 hr ***	168 hr ***
Drinking water	12 hr ***	22.4 hr **
Shoreline exposure	0 hr ***	22.4 hr **
Swimming	0 hr ***	22.4 hr **
Boating	0 hr ***	22.4 hr **

* Q1, Q2, Q3, and Q4 represent first, second, third and fourth quarter station data for 2012, respectively.

** Based on an average Missouri River water flow of 5.5 ft/sec, 84 miles down the river.

*** Values from Regulatory Guide 1.109, Revision 1.

NR- No release

REFERENCES

Electric Power Research Institute, Technical Report 1021106, "Estimation of Carbon-14 in Nuclear Power Plant Gaseous Effluents", December 2010.

U.S. Nuclear Regulatory Commission, Regulatory Guide 1.21, "Measuring, Evaluating, and Reporting Radioactivity in Solid Wastes and Releases of Radioactive Materials in Liquid and Gaseous Effluents from Light-Water-Cooled Nuclear Power Plants", Revision 1, 1974.

U.S. Nuclear Regulatory Commission, Regulatory Guide 1.23 (Safety Guide 23), "Onsite Meteorological Programs", Revision 0, 1972.

U.S. Nuclear Regulatory Commission, Regulatory Guide 1.111, "Methods for Estimating Atmospheric Transport and Dispersion of Gaseous Effluents in Routine Releases from Light-Water-Cooled Reactors", Revision 1, 1977.

U.S. Nuclear Regulatory Commission, NUREG/CR-2919, "XOQDOQ: Computer Program for the Meteorological Evaluation of Routine Effluent Releases at Nuclear Power Stations", 1982.

U.S. Nuclear Regulatory Commission, Regulatory Guide 1.111, "Methods for Estimating Atmospheric Transport and Dispersion of Gaseous Effluents in Routine Releases from Light-Water-Cooled Reactors", Revision 0, 1976.

U.S. Nuclear Regulatory Commission, NUREG-0597, "User's Guide to GASPAR Code", December 1980.

U.S. Nuclear Regulatory Commission, NUREG/CR-1276, "User's Manual for LADTAP II: A Computer Code for Calculating Radiation Exposure to Man From Routine Release of Nuclear Reactor Liquid Effluents", 1980.

U.S. Nuclear Regulatory Commission, Regulatory Guide 1.109, "Calculation of Annual Doses to Man from Routine Releases of Reactor Effluents for the Purpose of Evaluating Compliance with 10 CFR 50, Appendix I", Revision 1, 1977.

Enclosure 2

Offsite Dose Assessment Manual
January 1, 2012 through December 31, 2012

COOPER NUCLEAR STATION
OFFSITE DOSE ASSESSMENT MANUAL
-ODAM-
LIST OF EFFECTIVE PAGES

Page	Rev/Date	Page	Rev/Date	Page	Rev/Date
i	8/26/99	37	8/26/99	C-5	12/04/03
ii	8/26/99	38	8/26/99	C-6	2/06/02
		39	8/26/99	C-7	08/04/04
1	10/15/96	40	8/26/99	C-8	8/26/99
2	8/26/99	41	8/26/99	C-9	08/04/04
3	Original	42	8/26/99		
4	10/15/96	43	8/26/99	Appendix D:	
5	10/15/96	44	8/26/99		
6	8/26/99	45	8/26/99	iii	10/10/01
7	8/26/99	46	8/26/99		
8	10/15/96	47	8/26/99	D1.0-1	10/22/04
9	8/26/99	48	2/22/01		
10	8/26/99	49	8/26/99	D2.0-1	10/22/04
11	8/26/99	50	2/22/01	D2.0-2	10/22/04
12	8/7/00	51	8/26/99		
13	12/29/88	52	8/26/99	D3.0-1	10/10/01
14	12/29/88	53	8/26/99	D3.0-2	10/10/01
15	5/16/94	54	8/26/99		
16	8/26/99			D3.1-1	10/22/04
17	Original	Appendix A:		D3.1-2	10/22/04
18	Original			D3.1-3	03/31/04
19	Original	(Deleted)	1/27/89	D3.1-4	03/31/04
20	10/15/96			D3.1-5	10/10/01
21	8/26/99	Appendix B:		D3.1-6	10/22/04
22	8/26/99			D3.1-7	10/22/04
23	8/26/99	B-1	Original	D3.1-8	10/10/01
24	8/26/99	B-2	Original	D3.1-9	01/03/03
25	8/7/00	B-3	Original	D3.1-10	10/10/01
26	8/26/99	B-4	Original		
27	8/26/99	B-5	Original	D3.2-1	10/22/04
28	8/26/99	B-6	Original	D3.2-2	0
29	8/26/99	B-7	Original	D3.2-3	10/22/04
30	8/26/99			D3.2-4	10/22/04
31	8/26/99	Appendix C:		D3.2-5	10/22/04
32	8/26/99			D3.2-6	10/22/04
33	8/26/99	C-1	Original	D3.2-7	03/31/04
34	8/26/99	C-2	2/06/02	D3.2-8	03/31/04
35	8/26/99	C-3	2/06/02	D3.2-9	03/31/04
36	8/26/99	C-4	2/06/02	D3.2-10	10/10/01

NOTE: Original refers to page in effect on July 1, 1986 when the ODAM was implemented.

COOPER NUCLEAR STATION
OFFSITE DOSE ASSESSMENT MANUAL
-ODAM-
LIST OF EFFECTIVE PAGES

Page	Rev/Date
D3.2-11	0
D3.2-12	10/10/01
D3.2-13	0
D3.2-14	10/10/01
D3.2-15	08/31/06
D3.2-16	0
D3.3-1	10/10/01
D3.3-2	10/10/01
D3.3-3	10/10/01
D3.3-4	10/10/01
D3.3-5	10/10/01
D3.3-6	10/10/01
D3.3-7	10/10/01
D3.3-8	10/10/01
D3.3-9	10/10/01
D3.3-10	10/10/01
D3.3-11	03/28/06
D3.3-12	03/28/06
D3.3-13	03/28/06
D3.3-14	03/20/03
D3.3-15	03/20/03
D3.3-16	03/20/03
D3.3-17	03/20/03
D3.3-18	03/20/03
D3.4-1	10/10/01
D3.4-2	10/10/01
D3.5-1	10/10/01
D3.5-2	01/26/12
D3.5-3	01/26/12
D4.1-1	10/10/01
D4.1-2	0
D4.1-3	0
D4.1-4	2/22/01
D4.1-5	8/26/99
D4.1-6	0

Page	Rev/Date
D4.2-1	10/10/01
D4.3-1	10/10/01
D5.1-1	10/10/01
D5.2-1	10/22/04
D5.2-2	0
D5.3-1	8/7/00
D 5.3-2	8/7/00
D5.4-1	1
D5.4-2	0
D5.5-1	1
iv	2/22/01
B3.0-1	12/04/03
B3.0-2	12/04/03
B3.1-1	10/22/04
B3.1-2	0
B3.1-3	0
B3.1-4	0
B3.1-5	0
B3.1-6	0
B3.1-7	0
B3.1-8	0
B3.1-9	0
B3.2-1	10/22/04
B3.2-2	8/7/00
B3.2-3	0
B3.2-4	0
B3.2-5	0
B3.2-6	0
B3.2-7	08/31/06

Page	Rev/Date
B3.3-1	0
B3.3-2	04/30/08
B3.3-3	04/30/08
B3.4-1	0
B3.5-1	0
B4.1-1	0
B4.2-1	0
B4.3-1	0
B5.1-1	8/26/99
B5.2-1	0
B5.3-1	0
B5.4-1	1
B5.5-1	1

NOTE: Original refers to page in effect on July 1, 1986 when the ODAM was implemented.

COPY

Assessment Manual

-ODAM-

For assessment of

Gaseous and Liquid

Effluents

at

COOPER NUCLEAR STATION

Brownville, Nebraska

28872.WPD

COPY

COOPER NUCLEAR STATION
OFFSITE DOSE ASSESSMENT MANUAL
FOR GASEOUS AND LIQUID EFFLUENTS

Page

1.0 Introduction ..... -1-

2.0 Liquid Effluent ..... -2-

2.1 Radioactivity In Liquid Waste ..... -2-

2.2 Aqueous Concentration ..... -2-

2.3 Method of Establishing Alarm Setpoints ..... -4-

2.3.1 Setpoint for a Batch Release ..... -5-

2.3.2 Setpoint for a Continuous Release ..... -8-

2.4 Radioactivity Concentration in Water Beyond the Site and Exclusion Area Boundary ..... -10-

2.5 Accumulated Personal Maximum Dose ..... -12-

2.6 Projected Personal Maximum Dose ..... -15-

3.0 Gaseous Effluent ..... -17-

3.1 Introduction ..... -17-

3.2 Radioactivity in Gaseous Effluent ..... -17-

3.3 Main Condenser Air Ejector Noble Gas Monitor Alarm Setpoint ..... -19-

3.4 Effluent Noble Gas Monitor Alarm Setpoint ..... -20-

3.4.1 Setpoint Based on Dose Rate ..... -20-

3.5 Noble Gas Gamma Radiation Dose Accumulated in Air ..... -24-

3.6 Noble Gas Beta Radiation Dose Accumulated in Air ..... -27-

3.7 Dose Due to Iodine and Particulates in Gaseous Effluents* ..... -29-

3.7.1 GASPAR Method ..... -30-

3.7.2 Alternate Method ..... -31-

3.8 Dose to a Person from Noble Gases ..... -34-

3.8.1 Gamma Dose to Total Body - GASPAR Method ..... -34-

3.8.1.1 Alternate Method ..... -35-

3.8.2 Dose to Skin - GASPAR Method ..... -36-

3.8.2.1 Alternate Method ..... -36-

3.9 Projected Organ Dose Due to Gaseous Effluent ..... -37-

3.10 Dose Rate Due to Tritium, Iodines, and Particulates in Gaseous Effluents-38-

4.0 Dose Commitment From Releases Over Extended Time ..... -40-

4.1 Releases During A Quarter ..... -40-

4.2 Releases During 12 Months ..... -42-

4.2.1 Calculated Doses ..... -43-

4.2.2 Environmental Measurements ..... -45-

5.0 Radiological Environmental Monitoring Program ..... -47-

5.1 Environmental Sampling Program ..... -47-

APPENDIX A - (Deleted)

APPENDIX B - Reference Meteorological Data

APPENDIX C - Environmental Radiation Monitoring Program
Sample Types and Sample Station Locations

APPENDIX D - ODAM Specifications

OFFSITE DOSE ASSESSMENT MANUAL
FOR GASEOUS AND LIQUID EFFLUENT

1.0 Introduction

This Manual describes acceptable methods of calculating radioactivity concentrations in the environment and the potentially resultant personal dose equivalent commitment beyond the site and exclusion area boundary that are associated with LWR liquid and gaseous effluents. The radioactivity concentrations and dose estimates are used to demonstrate compliance with the Appendix D Specifications required by 10 CFR 50.36.a. The methodology stated in this Manual is acceptable for use in demonstrating operational compliance with 10 CFR 20.1302, 10 CFR 50 Appendix I, and 40 CFR 190.10(a). Only the dose attributable to the Station is considered in demonstrating compliance with 40 CFR 190 since no other nuclear facility exists within 50 miles of the Station.

Calculations are made to assess the air dose from radioactive noble gases near ground level beyond the site and exclusion area boundary location that could be occupied by a person where the maximum air dose is expected. The maximum dose commitment to the person beyond the site and exclusion area boundary potentially experiencing the maximum exposure to all other radioactive material measured in gaseous and liquid effluents released from the Station is also calculated. Alternatively, the dose commitment from effluents other than radioactive noble gases may be calculated to correspond with residence at an occupiable location where airborne exposures are unlikely to underestimate those experienced by the maximally exposed person.

2.0 Liquid Effluent

2.1 Radioactivity In Liquid Waste

The concentration of radionuclides in liquid waste is determined by sampling and analysis in accord with Table D3.1.1-1, Radioactive Liquid Waste Sampling and Analysis. Alternatively, pre-release analysis of the radioactivity concentration in liquid waste required by DSR 3.1.1.1 may be done by gross β-γ counting provided an effluent concentration beyond the site and exclusion area boundary for unidentified emitters, 1×10^{-8} μCi/ml, is applied where the discharge canal meets the river. When a radionuclide concentration is below the LLD for the analysis, it is not reported as being present in the sample. A general diagram of the liquid effluent stream components is shown in Figure 3.1A.

2.2 Aqueous Concentration

Radioactive material in liquid effluent is diluted successively by water flowing in the discharge canal and in the river. The diluted concentration of radionuclide i in a receiving stream is estimated with the equation

$$C_{zi} = C_i \frac{F_1}{F_2}$$

where C_i = concentration of radionuclide i in liquid radwaste released (μCi/ml)

C_{zi} = concentration of radionuclide i in the receiving stream (μCi/ml)

F_1 = release rate of liquid radwaste (ml/sec)*

F_2 = dilution flow of receiving stream of water (ml/sec)*

---

*F_1, F_2, and F_c may have any convenient units of flow (i.e., volume/time) provided the units of all are identical.

For the purpose of calculating the radioactivity concentration in water beyond the site and exclusion area boundary (Section 2.4), the flow in the discharge canal, F_c, is assigned to F_2.

This method of estimating concentration of radionuclide i in a receiving stream is very conservative as it is based on not exceeding the concentration limits in 10CFR20 Appendix B, Table 2, Column 2 during the period of radioactive material discharge.

As an alternate to the above method, the concentration of radionuclide i in a receiving stream can be calculated using the monthly and quarterly composite samples. This method, discussed in the basis of DSR 3.1.1.2, is performed as follows:

For Sr-89, Sr-90 and Fe-55

$$Czi = \frac{CqciVrq}{Vdq}$$

where Czi = concentration of radionuclide i in the receiving stream (µci/ml)

Cqci = concentration of radionuclide i in the quarterly composite sample (µci/ml)

Vrq = volume of liquid radwaste discharged during the quarter (ml)

Vdq = total volume of dilution flow corresponding to the time when Vrq was discharged for the quarter (ml)

For all other nuclides

$$Czi = \frac{Cmci\ Vrm}{Vdm}$$

where Czi = concentration of radionuclide i in the receiving stream (µci/ml)

Cmci = concentration of radionuclide i in the monthly composite sample (µci/ml)

Vrm = volume of liquid radwaste discharged during the month (ml)

Vdm = total volume of dilution flow corresponding to the time when Vrm was discharged for the month (ml)

2.3 Method of Establishing Alarm Setpoints

The liquid waste effluent monitor and the service water monitor are connected to alarms which provide automatic indication when 10 CFR Part 20, Appendix B, Table 2, Column 2 concentrations are expected to be exceeded beyond the site and exclusion area boundary. With prompt action to reduce radioactive releases following an alarm, the liquid release limit of 10 CFR Part 20.1302 and the limits provided by 10 CFR Part 50, Appendix I, Section IV are unlikely to be exceeded after the alarm.

The alarm setpoint for the liquid effluent radiation monitor is derived from the concentration limit provided in 10 CFR Part 20, Appendix B, Table 2, Column 2 applied where the discharge canal flows into the river. The alarm setpoint does not consider dilution, dispersion, or decay of radioactive material in the river. The radiation monitoring and isolation points are located in the liquid radwaste effluent line and the service water effluent line through which radioactive effluent is, or may be, eventually discharged into the discharge canal.

The alarm setpoint calculation for each liquid effluent monitor is based upon measurement according to Table D3.1.1-1 of radioactivity in a batch of liquid to be released or in the continuous aqueous discharge. Alternatively, the alarm setpoint may be based upon gross β-γ activity analysis of the liquid waste provided the effluent concentration beyond the site and exclusion area boundary for unidentified emitters, 1×10^{-8} μCi/ml, is observed.

In any case, a monitor may be set to alarm or trip at a lower activity concentration than the calculated setpoint.

2.3.1 Setpoint for a Batch Release

A sample of each batch of liquid radwaste is analyzed for I-131 and principal gamma emitters, or for total activity concentration prior to release. The ratio, $FMPC_b$, of the activity concentration in the tank to the effluent concentration (10 CFR Part 20, Appendix B, Table 2, Column 2) beyond the site and exclusion area boundary is calculated with the equation

$$FMPC_{bp} = \sum_i \frac{C_{bpi}}{MPC_i} \quad identified$$

where $FMPC_{bp}$ = fraction of effluent concentration beyond the site and exclusion area boundary in batch derived from activity measured prior to release.

C_{bpi} = concentration of radionuclide i (including I-131 and principal gamma emitters) in batch sample taken prior to release (μCi/ml).

MPC_i = effluent concentration beyond the site and exclusion area boundary of radionuclide i per 10 CFR Part 20, Appendix B, Table 2, Column 2 (μCi/ml)

When $FMPC_{bp}$ is derived from analyses identifying iodine and principal gamma emitters only, the value $FMPC_{bp}$ may be adjusted to account for radionuclides measured in the monthly and quarterly composite sample, but not measured prior to release. This adjustment, derived from measurements during past calendar quarters, is calculated with the equation:

$$FMPC_b = FMPC_{bp} \div E_b$$

where E_b = (Previous quarterly average of the fraction of the effluent concentration in the discharge canal due to I-131 and primary gamma emitters) ÷ (Previous quarterly average of the fraction of the effluent concentration in the discharge canal due to all radionuclides in batch releases.)

A reference value of E_b, derived from representative past measurements may be used routinely.

Whether radioiodine and primary gamma emitters are identified prior to a batch release or not, the liquid radwaste effluent line radiation monitor alarm and isolation valve closure setpoint is determined with the equation:

$$S = \frac{A}{FMPC_b} \cdot \frac{F_{S2}}{F_{S1}} \cdot g + Bkg$$

where S = radiation monitor alarm setpoint (cpm or μCi/ml)

A = counting rate (cpm/ml) or activity concentration (μCi/ml) of sample from laboratory analysis*

g = ratio of effluent radiation monitor counting rate to laboratory counting rate or activity concentration in a given batch of liquid (cpm per μCi/ml or μCi/ml per μCi/ml)

F_{S1} = maximum flow in the batch release line (gal/min)**

F_{S2} = minimum flow in the discharge canal (gal/min)**

Bkg = monitoring instrument background (cpm or μCi/ml)

Note that $A \div FMPC_b$ represents the counting rate of a solution having the same radionuclide distribution as the sample and having the maximum permissible concentration of that mixture.

Gross β-γ analysis alone may be used to determine the radioactivity in a batch prior to release. In that event, the fraction of the effluent concentration beyond the site and exclusion area boundary in the batch is:

$$FMPC_{bp} = \frac{C_{bp}}{1 \ x \ 10^{-8}}$$

where

C_{bp} = gross or total radioactivity concentration in batch sample taken prior to release (μCi/ml)

1×10^{-8} = effluent concentration beyond the site and exclusion area boundary of unidentified radionuclides (μCi/ml)

---

*A equals $\sum_i C_{bpi}$ if isotopic analysis was performed or C_{bp} if gross activity analysis was performed.

**Any suitable but identical units of flow (volume/time).

The value of $FMPC_{bp}$ computed with this expression is substituted in the preceding equation to calculate the setpoint.

2.3.2 Setpoint for a Continuous Release

Continuous aqueous radioactive discharges are sampled and analyzed according to the schedule in Table D3.1.1-1. The ratio $FMPC_{cw}$, of the activity concentration in each of the continuous release streams of the effluent concentration beyond the site and exclusion area boundary is calculated with the equations.

$$FMPC_{cw} = \sum_{i} \frac{C_{cwi}}{MPC_i} \quad identified$$

where

$FMPC_{cw}$ = fraction of effluent concentration beyond the site and exclusion area boundary in continuous release based upon activity measured in weekly composite sample(s).

C_{cwi} = concentration of radionuclide i (including I-131 and principal gamma emitters) in weekly composite sample(s) (μCi/ml)

When $FMPC_c$ is derived from analyses of I-131 and principal gamma emitters, it may be adjusted to account for radionuclides measured in the monthly and quarterly composite sample but not measured prior to release. Adjustment for radionuclides measured in monthly and quarterly composite samples but not in weekly composite samples is given by the equation

$$FMPC_c = FMPC_{cw} \div E_c$$

where E_c = (Quarterly average fraction of the effluent concentration in the discharge canal due to I-131 and primary gamma emitters measured in weekly composite sample of continuous releases during previous quarter) ÷ (Quarterly average fraction of the effluent concentration in the discharge canal due to all radionuclides in samples of continuous releases during previous quarter.)

A reference value of E_c, derived from representative past measurements, may be used routinely, instead.

The alarm setpoint of the radiation monitor on the discharge line is determined with the equation

$$S = \frac{A}{FMPC_c} \cdot \frac{F_{S2}}{F_{S1}} \cdot g + Bkg$$

where A = counting rate (cpm/ml) or activity concentration (μCi/ml) of weekly composite sample in the laboratory.

Terms g, F_{S1}, F_{S2}, and Bkg are defined the same as in the setpoint equation for a batch release.

Gross β-γ analysis alone may be used to determine the radioactivity in a liquid radioactive discharge. In that event, the fraction of the effluent concentration beyond the site and exclusion area boundary in a sample of the release is:

$$FMPC_c = \frac{C_c}{1 \ x \ 10^{-8}}$$

where C_c	=	gross or total radioactivity concentration in continuous aqueous release (μCi/ml)
1×10^{-8}	=	effluent concentration beyond the site and exclusion area boundary of unidentified radionuclides (μCi/ml)

The value of $FMPC_c$ computed with this expression is substituted in the preceding equation to calculate the setpoint.

In the event a long-term trend is evident in setpoints derived from the weekly sample and a setpoint value can be derived from the aggregate of the weekly samples which appears to have less variability and to better represent the effluent, then the setpoint based on the combined, long-term data may be used.

2.4 Radioactivity Concentration in Water Beyond the Site and Exclusion Area Boundary

DSR 3.1.1.2 requires that measured radioactivity concentrations in liquid releases be evaluated to verify that the activity concentration complied with Specification DLCO 3.1.1. Compliance with DLCO 3.1.1 is evaluated by calculating the average radioactivity concentration in water at the end of the discharge canal, expressed as a fraction of effluent concentration beyond the site and exclusion area boundary on the basis of measured release(s), per Table D3.1.1-1, of Fe-55, Sr-89, and Sr-90 averaged over no more than 92 days and other radionuclides averaged over no more than 31 days.

The average concentration of radioactive noble gases in discharge canal water may be calculated separately as a fraction of the effluent concentration 2×10^{-4} uCi/ml, since the critical exposure pathway for it, immersion in water, differs from the critical exposure pathway for other radionuclides in water, which is via ingestion of the water.

The average concentration, expressed as a fraction of the effluent concentration, is calculated with the equation:

$$\overline{FMPC} = \frac{1}{3785(TE-TB)} \sum_k \frac{1}{F2_k} \sum_i \frac{\hat{Q}_{ki}}{MPC_i}$$

where $\overline{FMPC}$ = fraction of the effluent concentration beyond the site and exclusion area boundary of a mixture of radionuclides in water (unitless, and should be limited to ≤ 1)

3785 = conversion factor (ml/gal)

TE-TB = increment of time between beginning and ending period of interest during which the concentration is averaged (min)

$F2_k$ = flow of aqueous stream beyond the site and exclusion area boundary into which radioactive release represented by sample k is diluted, i.e., the discharge canal flow during the release represented by sample k (gal/min)

$\hat{Q}_{ki}$ = quantity of radionuclide i represented by sample k which is released as an effluent within the time boundaries TB and TE (μCi)

MPC_i = maximum permissible concentration beyond the site and exclusion area boundary of radionuclide i per 10 CFR Part 20, Appendix B, Table 2, Column 2 (μCi/ml)

The data used to compute FMPC are measured by the radioactive liquid sampling and analysis program described in Table D3.1.1-1.

2.5 Accumulated Personal Maximum Dose

DSR 3.1.3.1 requires the dose or dose commitment to a member of the public due to radioactive material released in liquid effluent to be calculated on a cumulative basis at least once every 31 days. The requirement is satisfied by computing the accumulated dose commitment to the most exposed organ and to the total body of a hypothetical person exposed by eating fish taken from the river beyond the site and exclusion area boundary near the discharge canal and drinking water taken from the river three miles downstream.

The accumulated dose commitment is computed at least once every 31 days, but may be computed as analyses becomes available. The dose will be calculated in accordance with Regulatory Guide 1.109, Revision 1, utilizing the LADTAP II computer code.*

The LADTAP II program is routinely used for calculating radiological dose assessments for inclusion in the CNS Radioactive Effluents Release Report.

*With quality factor for Tritium reduced from 1.7 to 1.0 per ICRP.

continuous releases. Similarly the contributions from H-3 are available on a monthly basis and the contributions from Sr-89, Sr-90, and Fe-55 become available on a quarterly basis.

D_{an} = the dose commitment attributed to releases represented by all analyses k to organ n, including total body, of the maximally exposed person in age group a (mrem).

A_{eani} = transfer factor relating a unit release of radionuclide i (Ci) in a unit stream flow (gal/min) to dose commitment to organ n, or total body, of an exposed person in age group a via environmental pathway e

$$\frac{mrem}{Ci \cdot min/gal}$$

$3.785 \times 10^{-3} = 3785$ ml/gal x 10^{-6}Ci/μCi

C_{ik} = the concentration of radionuclide i in the undiluted liquid waste to be discharged (μCi/ml), i.e., in the sample k

Δt_k = elapsed time of release represented by sample k during which radionuclide i is discharged at concentration C_{ik}, i.e., the duration of the release represented by sample k (minutes)

$(F/_1/F_2)$ = the quotient of the release flow, F_1, and the dilution flow, F_2, during the release represented by sample k

Site specific parameters input to LADTAP II are listed below. These parameters are included in the program calculations and are only changed as conditions and/or situations warrant.

- CNS effluent water flow in cfs, the average flow in the discharge canal during the time of interest.

- Dilution factor for the effluent.

  Drinking water: ≤5 (for LADTAP variable Dilution factor)

  Fish*: ≤5 (for LADTAP variable Dilution factor)

  *Fishing - Seasonal variation: Consumption of fish is evaluated from April through November.

Alternatively, the accumulated dose commitment may be calculated in the following way:

$$\Delta D_{ank} = 3.785 \times 10^{-3} \sum_{e} \sum_{i} A_{eani} \, C_{ik} \cdot \Delta t_k \left(\frac{F_1}{F_2} \right)_k$$

$$D_{an} = \sum_{k} \Delta D_{ank}$$

where ΔD_{ank} = the dose commitment (mrem) to organ n of age group a due to the isotopes in a release represented by analysis k, where the analyses are those required by Table D3.1.1-1. Thus the contribution to the dose from gamma emitters become available on a batch basis for batch releases and on a weekly basis for

Pathway-to-dose transfer factors, A_{eani}, for use in calculating the dose commitment arising from radioactive material released in aqueous effluents, are calculated in accordance with equations and values recommended in Regulatory Guide 1.109, Revision O. Appropriate factors representing applicable environmental pathways of exposure and most exposed age group(s) are selected and used in calculating the dose commitment. The pathway(s) and thus age group(s) selected may vary by season. For instance, when fishing near the Station during the winter is nonexistent, evaluation of the fish pathway is not required.

The age group potentially most exposed via eating fish is expected to be the adult, and the age group potentially most exposed via drinking water from the Missouri River is expected to be the infant. Normally, only these need to be evaluated for compliance with DSR 3.1.3.1. For the purpose of calculating the dose to the Member of the Public who is potentially exposed most by eating fish taken from the river beyond the site and exclusion area boundary near the discharge canal, $F_2 = 5F_c$. As long as potable water is known not to be taken from the river within three miles downstream of Cooper Station, as verified by the annual land survey, the potential dose to a Member of the Public via drinking water will be assessed on the basis of water assumed to be taken from the river three miles downstream. At that location, F_2 is conservatively assumed to be $F_2 = 5F_c$. Variables F_1, F_2, and F_c are defined in Section 2.2.

2.6 Projected Personal Maximum Dose

DSR 3.1.3.2 requires the maximum total body and organ doses to a person beyond the site and exclusion area boundary due to radioactive material released in liquid effluent to be projected over a quarter at least one time during every 31 days if

radioactive liquid radwaste is released and the radwaste system is not operated.

This requirement is satisfied by calculating the projected dose commitment to a hypothetical person exposed by eating fish taken from the river beyond the site and exclusion area boundary near the discharge canal and drinking water taken from the river three miles downstream. The potential dose commitments to organs and to the total body are computed separately.

The quarterly dose commitment to a maximally exposed hypothetical person is projected by computing the accumulated doses to the total body and most exposed organ during the most recent three months and assuming the result represents the projected doses during the current quarter. Doses will be calculated in accordance with Section 2.5.

As an alternative, the quarterly dose commitment to the total body and most exposed organ may be projected by using the equation

$$P_{an} = \frac{91}{X} D_{an}$$

where P_{an} = projected dose commitment (mrem) to organ n (including total body of age group a during the current quarter)

91 = number of days in a quarter

X = number of days to date in current quarter

D_{an} = dose commitment during the quarter-to-date (mrem) based upon results of aqueous effluent sampling and analyses available to date during the quarter

3.0 Gaseous Effluent

3.1 Introduction

The Station discharges gaseous effluent through a stack (Elevated Release Point) and discharges ventilation air from the radwaste, augmented radwaste, turbine, and reactor buildings through the respective building vents. These gaseous effluent streams, radioactivity monitoring points, and effluent discharge points are shown schematically in Figure 3-1. Gaseous release point locations and elevations at Cooper Station are described in Table 3-1. Gaseous discharges from the Elevated Release Point (ERP) are treated as an elevated release while discharges via building vents are assumed to be ground-level releases or split-wake releases.

Gaseous release point locations and elevations at the Station are described in Table 3-1.

3.2 Radioactivity in Gaseous Effluent

For the purpose of estimating radionuclide concentrations and radiation doses, beyond the site and exclusion area boundary measured radionuclide concentrations in gaseous effluent and in ventilation air exhausted from the Station are relied upon. Table D3.2.3-1 identifies the radioactive gaseous effluent measurements. When a radionuclide concentration is below the LLD for the analysis, it is not reported as being present in the sample.

Noble Gases. The distribution of noble gas radionuclides in a gaseous effluent is determined in one of the following ways.

1. Preferably, the radionuclide distribution is obtained by gamma spectrum analysis of effluent gas samples in accordance with DLCO 3.2.3, Table D3.2.3-1. Results of analyses of one or more samples may be averaged to obtain a representative spectrum.

2. In the event a representative radioactive noble gas distribution is unobtainable from samples taken during the period of interest, it may be derived from previous measurements or may be based upon a computed spectrum appearing in Table 3-2.

3. Alternatively, the total activity concentration of radioactive noble gases may be assumed to be krypton - 88.

The total quantity of radioactive noble gas discharged during an interval of time is determined by integrating the rate measurement of each effluent noble gas monitor. This may be done by the effluent monitoring system or the measured activity discharged via a gaseous effluent stream may be calculated with the equation

$$Q = 2.8 \times 10^4 \frac{N}{g} \cdot F$$

where Q = total radioactive noble gas release via a gaseous effluent stream during a given time interval (μCi)

N = net counts accumulated during the time interval

g = effluent noble gas monitor counting rate response

$$\left(\frac{cpm}{\mu Ci/cm^3}\right)$$

F = gaseous effluent stream discharge rate (cfm)

2.8×10^4 = conversion constant (cm^3/ft^3)

3.3 Main Condenser Air Ejector Noble Gas Monitor Alarm Setpoint

A noble gas activity monitor is provided to measure gross gamma activity in gases at the main condenser air ejector. The monitor includes an alarm that is set to report when the gamma radiation level in gas discharged by the main condenser air ejector indicates the gross radioactivity discharge rate exceeds 1 Ci/sec.

The alarm setpoint is determined with the relation

$$S = 2120 \frac{h\ P}{F} + Bkg$$

where S = the alarm setpoint (mr/hr)

h = monitor response to activity concentration of SJAE offgas being monitored (mr/hr per ($\mu Ci/cm^3$))

F = air ejector discharge rate (cfm)

Bkg = monitoring instrument background (mr/hr)

P = fraction of allowable limit representing a chosen margin of conservatism in the setpoint (unitless)

$$2120 = 1 \frac{Ci}{Sec.} \times \frac{1.0E6\mu Ci}{Ci} \times \frac{1\ ft^3}{28317\ cm^3} \times \frac{60\ sec}{min.}$$

3.4 Effluent Noble Gas Monitor Alarm Setpoint

DSR 3.3.2.9 requires an alarm setpoint to be determined for each radioactive noble gas effluent monitor. Each setpoint is derived to cause the alarm to report when the dose equivalent rate beyond the site and exclusion area boundary due to radioactive noble gas in gaseous effluent exceeds a limit in DLCO 3.2.1.a. Each noble gas activity monitor included in Table D3.3.2-1 except the main condenser air ejector off gas monitor is set to initiate alarm at or below the derived setpoint.

For the purpose of deriving a setpoint, the distribution of noble gas radionuclides in an effluent stream is determined as described in Section 3.2.

3.4.1 Setpoint Based on Dose Rate

The alarm setpoint of a radioactive noble gas effluent monitor may be calculated on the basis of whole body dose equivalent rate beyond the site and exclusion area boundary. A setpoint of a monitor of an elevated release, e.g., from the stack, may be calculated with the equation.

$$S = 1.06 \frac{h \cdot P}{f} \frac{\sum_i C_i}{\sum_i \left(C_i \cdot DF_i^s\right)} + Bkg$$

The setpoint of a monitor of a ground-level or split-wake release, e.g., from the turbine building vent or the AOG building, may be calculated with the equation

$$S = 1.06 \frac{h \cdot P}{f \frac{X}{Q}} \frac{\sum_i C_i}{\sum_i \left(C_i \cdot DF_i^v\right)} + Bkg$$

where

S	=	the alarm setpoint (cpm, mr/hr, or $\mu Ci/cm^3$)
h	=	monitor response to activity concentration of effluent being monitored, (cpm per $\mu Ci/cm^3$, mr/hr per $\mu Ci/cm^3$, or $\mu Ci/cm^3$ per $\mu Ci/cm^3$)
C_i	=	relative concentration of noble gas radionuclide i in effluent at the point of monitoring ($\mu Ci/cm^3$)
X/Q	=	atmospheric dispersion from point of ground-level or split-wake release to the location of potential exposure (sec/m^3)
DF_i^s	=	factor converting elevated release rate of radionuclide i to total body dose equivalent rate at the location of potential exposure (mrem)/(yr $\cdot \mu$Ci/sec)

DF_i^v	=	factor converting ground-level or split-wake release of radionuclide i to the total body dose equivalent rate at the location of potential exposure (mrem)/(yr ·μCi/m^3)
f	=	flow of gaseous effluent stream, i.e., flow past the monitor (ft^3/min)
Bkg	=	monitoring instrument background (cpm, mr/hr, or μCi/cm^3)
1.06	=	500 mrem/yr x 60 sec/min x 35.3 ft^3/m^3 x 1.0 m^3/1.0 x 10^6 cm^3
P	=	fraction of allowable limit representing a chosen margin of conservatism in the setpoint (unitless)

Each monitoring channel has a unique response, h, which is determined by the instrument calibration. In order to ensure the correct derivation of a setpoint, the monitor background (Bkg) and the monitor response factor (h) must be in consistent units.

The concentration of each noble gas radionuclide i in a gaseous effluent is determined as discussed in Section 3.2.

The atmospheric dispersion and the dose conversion factor, DF_i^s depends upon local conditions. For the purpose of calculating radioactive noble gas effluent monitor alarm setpoints appropriate for Cooper Station, the locations of maximum potential exposure beyond the site and exclusion area boundary and the reference atmospheric dispersion factors applicable to the derivation of setpoints are:

Discharge Point	Discharge Height	Receptor Location		Atm. Dispersion (sec/m3)
		Sector	Distance(m)	
Vent	Ground-Level or Split-Wake	NNW	1,150	3.4×10^{-6}
ERP	Elevated	W	1,800	8.2×10^{-8}

The applicable dose conversion factors, DF^s_i and DF^v_i for deriving setpoints are in Table 3-3.

3.5 Noble Gas Gamma Radiation Dose Accumulated in Air

DSR 3.2.2.1 requires the calculation on a cumulative basis of air dose due to gamma radiation from radioactive noble gas released in gaseous effluents. DLCO 3.2.2, Condition A requires reporting to the NRC when the air dose beyond the site and exclusion area boundary due to noble gas gamma radiation exceeds 5 mrad during any calendar quarter or 10 mrad during any calendar year.

The distribution of radioactive noble gases in gaseous releases and the quantity discharged during an interval of interest are determined as described in Section 3.2.

The gamma radiation dose to air beyond the site and exclusion area boundary as a consequence of noble gas released from the station will be calculated in accordance with Regulatory Guide 1.109, Revision 1, utilizing USNRC Computer Code GASPAR.*

The GASPAR program is routinely used for calculating radiological dose assessments for inclusion in the CNS Radioactive Effluents Release Report.

Site specific parameters input to GASPAR are listed below. These parameters are included in the program calculations and are only changed as conditions and/or situations warrant.

- Source terms for the intervals of interest
- Fraction of year milch animals are on pasture
- Atmospheric dispersion factors, for specific locations, obtained from annual meteorological data which are used to determine noble gas (gamma and beta) air doses for the following:
  - Maximum individual site boundary
  - Maximum individual nearest resident
  - Maximum individual nearest milch cow
  - Maximum individual nearest garden
- Population distribution (0 to 50 miles)
- Meat, milk, and vegetable distribution (0 to 50 miles)
- Absolute humidity at Cooper Nuclear Station
- Fraction of the year vegetables are grown
- Fraction of daily feed intake derived from pasture for milch and meat animals

---

*Quality factor for Tritium reduced from 1.7 to 1.0 per ICRP.

Alternatively, the gamma radiation dose to air beyond the site and exclusion area boundary as a consequence of noble gas released from the station may be calculated with the equation:

$$D = \sum_i \left(Q_{cs_i} \cdot A\gamma_{cs_i} \right) + \sum_i \left(Q_{cv_i} \cdot \left(\frac{X}{Q} \right)_{cv} \cdot A\gamma_{v_i} \right)$$

where D = noble gas gamma dose to air (mrad)

$Q_{cs_i} = \Sigma\, \Delta Q_{cs_i}$ = cumulative release of noble gas nuclide i from stack (μCi).

$A\gamma_{cs_i}$ = factor converting unit noble gas stack release to ground level air dose from overhead plume gamma radiation (mrad/μCi).

$A\gamma_{v_i}$ = factor converting time integrated, ground level concentration of noble gas to air dose from gamma radiation

$$\left(\frac{mrad}{\mu Ci \; \frac{sec}{m^3}} \right)$$

Q_{cvi} $= \sum_{time} \Delta Qcvi$ = cumulative release of noble gas nuclide i from building vents (μCi).

$\left(\frac{X}{\bar{Q}}\right)_{cv}$ = long term average atmospheric dispersion factor for a ground level or split wake release (sec/m^3).

DSR 3.2.2-1 is satisfied by calculating the noble gas gamma radiation dose to air beyond the site and exclusion area boundary at a point situated at the NNW site boundary, and on the basis of reference* atmospheric dispersion assuming continuous gaseous release. At that location, the reference atmospheric dispersion factor for a vent (ground-level) release is $X/Q = 3.4 \times 10^{-6}$ sec/m^3. Appropriate values of $A\gamma_{csi}$ and $A\gamma_v$ for use in calculating air doses at that location are listed in Table 3-4.

3.6 Noble Gas Beta Radiation Dose Accumulated in Air

DLCO 3.2.2 requires that the air dose beyond the site and exclusion area boundary from beta radiation not exceed 10 mrad during any quarter and 20 mrad during any year. DSR 3.2.2-1 requires the air dose to be calculated on a cumulative basis.

The radioactive noble gas distribution and activity discharged are determined as described in § 3.4 herein.

---

*Onsite meteorological data for the period July 1, 1976, to June 30, 1977, which was used in the Cooper Station Demonstrated of Compliance with 10 CFR 50, Appendix I, revision 1, January, 1978.

The beta radiation dose to air beyond the site and exclusion area boundary as a consequence of noble gas released from the station will be calculated in accordance with Regulatory Guide 1.109, Revision 1, utilizing USNRC Computer Code GASPAR.*

Alternatively, the beta radiation dose to air beyond the site and exclusion area boundary as a consequence of noble gas released from the station may be calculated with the equation

$$D = \sum_i \left(Q_{cs_i} \frac{X}{Q_{cs}} + Q_{cv_i} \frac{X}{Q_{cv}} \right) \cdot A\beta_i$$

Where

D	=	noble gas beta dose to air (mrad)
$(X/Q)_{cs}$	=	long-term average atmospheric dispersion factor for stack releases (sec/m^3)
$A\beta_i$	=	factor converting time integrated ground level concentration of noble gas radionuclide i to air dose from beta radiation

$$\frac{mrad}{(\mu Ci\ sec)/m^3}$$

DSR 3.2.2.1 is satisfied by calculating the noble gas beta radiation dose to air beyond the site and exclusion area boundary at a point situated at the NNW site boundary, and on the basis of reference atmospheric dispersion assuming continuous gaseous discharge. At that location, the reference atmospheric dispersion factors are:

$(X/Q)_s$ = 1.2×10^{-8} sec/m^3 at the NNW site boundary

$(X/Q)_v$ = 3.4×10^{-6} sec/m^3

Beta radiation-to-air dose conversion factors, $A\beta_i$, for noble gas radionuclides are listed in Table 3-4.

---

*Quality factor for Tritium reduced from 1.7 to 1.0 per ICRP.

3.7 Dose Due to Iodine and Particulates in Gaseous Effluents*

DLCO 3.2.3 requires that radioiodine, and radioactive material in particulate form having half-lives greater than eight days in gaseous effluents released to the area beyond the site and exclusion area boundary cause no more than 7.5 mrem to any organ of a member of the public during any calendar quarter or 15 mrem to an organ of a member of the public during any calendar year. DSR 3.2.3.2 requires the dose to be calculated at least once every 31 days.

Radionuclides other than noble gases or tritium in gaseous effluents that are measured by the sampling and analysis program described in Table D3.2.3-1 are used as the release term in dose calculations. Airborne releases are discharged either via the stack (ERP) as an elevated release or via building vents and treated as a ground level or split-wake release. For each of these release combinations, samples are analyzed weekly, monthly, quarterly, or for a specific release according to Table D3.2.3-1.

Each sample provides a measure of the concentration of specific radionuclides, C_i, in gaseous effluent discharged at flow, F_a, during a time increment Δt. Thus, each release is quantified according to the relation:

*The dose to any organ of a person arising from radioactive iodine-131, iodine-133, and radioactive material in particulate form having half-lives greater than eight days. Noble gases not considered.

$$\Delta Q_{ijk} = C_{ik} F_{aj} \Delta t_j$$

$$Q_{ik} = \sum_j C_{ik} F_{aj} \Delta t_j$$

where Q_{ik} = the quantity of radionuclide i released in a given effluent stream based on analysis k (Ci)

C_{ik} = concentration of radionuclide i in gaseous effluent identified by analysis k (Ci/m^3) or ($\mu Ci/cm^3$)

F_{aj} = effluent stream discharge rate during time increment Δt_j(m^3/sec)

Δt_j = elapsed time in increment j during which radionuclide i at concentration C_{ik} is being discharged (sec)

3.7.1 GASPAR Method

A person may be exposed directly to an airborne concentration of radioactive material discharged in effluent and indirectly via pathways involving deposition of radioactive material onto the ground. Dose estimates account for the separate exposure pathways. The dose commitment to a person beyond the site and exclusion area boundary associated with a gaseous release, Q_{ik}, of radioactive material other than noble gas will be calculated in accordance with Regulatory Guide 1.109, Revision 1, utilizing USNRC Computer Code GASPAR.*

The GASPAR program is routinely used for calculating radiological dose assessments. Site specific parameters input to GASPAR are listed in Section 3.5.

---

*Quality factor for Tritium reduced from 1.7 to 1.0 per ICRP.

3.7.2 Alternate Method

Alternatively, the dose commitment to a person beyond the site and exclusion area boundary associated with a gaseous release, Q_{ik}, of radioactive material other than noble gas may be calculated with one of the appropriate following equations

release via the stack:

$$D_{ansk} = Q_{iks}\left[\sum_i TA_{ani}\left(\frac{Xd}{Q}\right)_{cs} + \sum_e \sum_i TG_{eani}\left(\frac{D}{Q}\right)_{bse}\right]$$

release via a vent:

$$D_{anvk} = Q_{ikv}\left[\sum_i TA_{ani}\left(\frac{Xd}{Q}\right)_{bv} + \sum_e \sum_i TG_{eani}\left(\frac{D}{Q}\right)_{cve}\right]$$

where

D_{ansk} = the dose commitment (mrem) to organ n of a person in age group a due to radionuclides identified in analysis k of an elevated (ERP) release where the analysis is one required by Table D3.2.3-1.

D_{anvk} = the dose commitment from a vent release (mrem)

TA_{ani} = factor converting airborne concentration of radionuclide i to dose commitment to organ n of a person in age group a

$$\left(\frac{mrem}{(Ci\ sec)/m^3}\right)$$

TG_{eani} = factor converting ground deposition of radionuclide i to dose commitment to organ n of a person in age group a exposed via environmental pathway e (mrem/Ci/m^2)

(D/Q) = relative deposition factor (m^{-2})

(Xd/Q) = depleted atmospheric dispersion factor (mCi/m^3 per mCi/sec)

The analysis index k may represent either

p, analysis of a grab sample

w, a weekly composite analysis

m, a monthly composite analysis

q, a quarterly composite analysis

The dose commitment accumulated by a person beyond the site and exclusion area boundary is computed at least every 31 days, but may be calculated as analytical results of effluent measurements, performed according to Table D3.2.3-1, become available.

The dose is accumulated in the following way.

The dose accumulated as a result of stack discharge is

$$D_{ans} = \sum_{w} D_{answ} + \sum_{m} D_{ansm} + \sum_{q} D_{ansq}$$

and the dose accumulated as a result of a vent discharge is

$$D_{anv} = \sum_{w} D_{anvw} + \sum_{m} D_{anvm} + \sum_{q} D_{anvq}$$

Doses committed during the same time period due to discharges from the stack and vents are additive, thus:

$$D_{an} = D_{ans} + \sum_{v} D_{anv}$$

where D_{an} = the dose commitment accumulated during the quarter to date as a result of all measured radioactive gaseous discharges except noble gases and tritium to any organ n, including total body, of a person offsite in age group a (mrem)

When the dose to a person from iodine and particulates discharged in gaseous effluent is calculated as required by DSR 3.2.3.2, appropriate environmental pathways of exposure will be evaluated. The pathway(s) and/or age group(s) selected may vary by season. Appropriate pathway-to-dose transfer factors, A_{eani}, are selected for use in calculating the dose.

The dose to a receptor 1.1 miles west of the Station is calculated on the basis of continuous gaseous release and reference meteorological conditions. The reference atmospheric dispersion and deposition factors at that location to be used for assessing compliance with DLCO 3.2.3 are:

$$\left(\frac{Xd}{Q}\right)_s = 8.1 \ x \ 10^{-8} \ sec/m^3 \qquad \left(\frac{D}{Q}\right)_s = 4.6 \ x \ 10^{-10} \ m^{-2}$$

$$\left(\frac{Xd}{Q}\right)_v = 4.4 \ x \ 10^{-7} \ sec/m^3 \qquad \left(\frac{D}{Q}\right)_v = 9.5 \ x \ 10^{-10} \ m^{-2}$$

The receptor is assumed to drink milk produced by the milch animal which experiences the maximum D/Q. Maximum values of the relative deposition factors for a milch animal located 3.7 miles northwest of the Station, are:

$$\left(\frac{D}{Q}\right)_s = 1.2 \ x \ 10^{-10} \ m^{-2}$$

$$\left(\frac{D}{Q}\right)_v = 3.7 \ x \ 10^{-10} \ m^{-2}$$

<u>40 CFR Part 190</u>. When the dose due to gaseous effluent is calculated for the purpose of evaluating compliance with 40 CFR Part 190 (reference Section 4.2), the dose contributed by tritium is included in the evaluation and is calculated in the following way.

Since tritium in water vapor is absorbed directly by vegetation, the tritium concentration in growing vegetation is proportional to the airborne concentration rather than to relative deposition as in the case of particulates. Thus the dose commitment from airborne tritium via vegetation (fruit and vegetables), air-grass-cow-milk, or air-grass-cow-meat pathways is calculated with the appropriate one(s) of the equations:

for a stack release

$$D_{ansk} = \frac{X}{Q_s} \sum_i Q_{iks} \sum_p TA_{anip}$$

for a vent release

$$D_{ankv} = \frac{X}{Q_v} \sum_i Q_{ikv} \sum_p TA_{anip}$$

3.8 Dose to a Person from Noble Gases

DSR 3.4.1.1 requires the calculation of dose to a member of the public for the purpose of assessing compliance with provisions of 40 CFR Part 190.10(a). That assessment includes the calculation of the gamma dose to the total body and the beta plus gamma dose to the skin of the person due to radioactive noble gases in gaseous effluents.

3.8.1 Gamma Dose to Total Body - GASPAR Method

The gamma radiation dose to the whole body of a member of the public as a consequence of noble gas released from the station will be calculated in accordance with Regulatory Guide 1.109, Revision 1, utilizing USNRC Computer Code GASPAR.*

---

*Quality factor for Tritium reduced from 1.7 to 1.0 per ICRP.

3.8.1.1 Alternate Method

Alternatively, the gamma radiation dose to the whole body of a member of the public as a consequence of noble gas released from the Station may be calculated with the equation:

$$D\gamma = \sum_i \left(Q_{csi} \cdot P\gamma_{cs_i} + Q_{cv_i} \left(\frac{X}{Q} \right)_{cv} \cdot P\gamma_{v_i} \right)$$

where

$D\gamma$ = noble gas gamma dose to total body (mrem)

$P\gamma_{cs_i}$ = factor converting unit noble gas nuclide i in stack release to total body dose at ground level received from the overhead plume (mrem/μCi)

$P\gamma_{v_i}$ = factor converting time integrated, ground level concentration of noble gas nuclide i to air dose from gamma radiation

$$\left(\frac{.mrem}{\mu Ci \ \frac{sec}{m^3}} \right)$$

When the total body dose due to gamma radiation from noble gas is evaluated as required by DSR 3.4.1.1, the dose to the nearby resident exposed most by all applicable exposure pathways combined is computed. Alternatively, the nearby resident exposed to maximal ground-level noble gas concentrations (maximum X/Q) may be selected as the receptor. Values by $P\gamma cs_i$ and $P\gamma v_i$ for this receptor, 1.1 miles west of the station, appear in Table 3-5.

3.8.2 Dose to Skin - GASPAR Method

The beta radiation dose to the skin of a member of the public due to beta radiation from noble gas released from the station will be calculated in accordance with Regulatory Guide 1.109, Revision 1, utilizing USNRC Computer Code GASPAR.*

3.8.2.1 Alternate Method

Alternatively, the beta radiation dose to the skin of a member of the public due to beta radiation from noble gas released from the Station may be calculated with the equation

$$D\beta = \sum_i \left(Q_{cs_i} \frac{X}{Q_{cs}} + Q_{cv_i} \frac{X}{Q_{cv}} \right) \cdot S\beta_i$$

where $D\beta$ = noble gas beta dose to skin (mrem)

$S\beta_i$ = factor converting time integrated ground level concentration of noble gas radionuclide i to skin dose from beta radiation

$$\frac{mrem}{(\mu Ci\ sec)/m^3}$$

Values of $S\beta_i$ for noble gases are included in Table 3-5.

When the skin dose due to noble gas beta radiation is evaluated as required by DSR 3.4.1.1, the receptor selected is the nearby resident exposed most via all applicable exposure pathways together. Alternatively, the nearby resident exposed to maximal ground-level concentrations (maximum X/Q) may be selected as the receptor. The location of the latter resident is 1.1 miles west of the station.

---

*Quality factor Tritium reduced from 1.7 to 1.0 per ICRP.

The total dose to the skin from noble gases is approximately equal to the beta radiation dose to the skin plus the gamma radiation dose to the total body.

3.9 Projected Organ Dose Due to Gaseous Effluent

DSR 3.2.5.1 and DSR 3.2.4.2 requires organ dose to a member of the public due to radioactive material in air effluent be projected during each month in which radioactive material is released in gaseous effluent without treatment. The purpose is to guide plant personnel in operating the EVTS and the Offgas Treatment System.

The organ dose is projected by calculating the dose to the most exposed organ accumulated during the month to date in accordance with Sections 3.7 and by projecting it for an entire 31 day time by employing the equation:

$$PD = \frac{31}{X} D$$

where:

PD	=	projected organ dose to a member of the public (mrem)
31	=	number of days over which dose is projected
X	=	number of days to date during the projection period
D	=	dose accumulated to the most exposed organ of a member of the public during the month to date (mrem).

3.10 Dose Rate Due to Tritium, Iodines, and Particulates in Gaseous Effluents

DLCO 3.2.1.b requires that the dose rate to any body organ created by the release of tritium, radioiodines, and radioactive material in particulate form having half-lives greater than eight days, shall not exceed 1500 mrem/yr. DSR 3.2.1.1 requires the dose rate to be calculated at least once every 31 days.

The dose equivalent rate from tritium, iodine, and radionuclides in particulate form in airborne effluent due to exposure by inhalation plus tritium absorption through the skin may be calculated for each discharge point by using the following equations. For effluent from an elevated release point, i.e., stack discharge above building wake, the equation is:

$$D_{ans} = \frac{10^{-6}}{TE-TB} \sum_k \sum_i Q_{ski} \left(\frac{X}{Q}\right)_s TA_{eani}$$

For effluent from a ground-level release point, i.e., a building vent, the equation is:

$$D_{anv} = \frac{10^{-6}}{TE-TB} \sum_k \sum_i Q_{vki} \left(\frac{X}{Q}\right)_v TA_{eani}$$

Dose rates from separate release points may be combined to give

$$D_{an} = D_{ans} + \sum_v D_{anv}$$

where D_{an} = dose equivalent commitment rate to organ n of a person in age group a due to radioactive particulates, iodine, and tritium in airborne effluent that are inhaled (mrem/hr)

D_{ans}, D_{anv}	=	dose equivalent commitment rate due to radioactive particulates, iodine, and tritium from an elevated release and a ground-level release respectively (mrem/hr)
Q_{ski}, Q_{vki}	=	quantity of radionuclide i released in a given effluent stream, either elevated or ground-level, based on analysis k (uCi) during discharge time increment TB to TE (hr)
TE	=	ending time of effluent discharge
TB	=	beginning time of effluent discharge
TE-TB	=	effluent averaging time (hr)
$(X/Q)_s, (X/Q)_v$	=	atmospheric dispersion from an elevated or a ground-level release respectively to ground-level at the receptor (uCi/m^3 per uCi/sec)
TA_{eani}	=	factor converting airborne concentration of radionuclide i to dose commitment to organ n of a person in age group a and where e represents exposure via inhalation

$$\left(\frac{mrem}{(Ci\ sec)/m^3}\right)$$

10^{-6}	=	conversion, 10^{-6}Ci/μCi

The analysis index, k, may represent either a grab sample, an integrated (continuous) sample, or a composite sample of an effluent. In turn, each sample represents certain radionuclides in the effluent during the time increment represented by the sample.

4.0 Dose Commitment From Releases Over Extended Time

4.1 Releases During A Quarter

An annual assessment of radiation doses arising from liquid and gaseous effluents from the Station during each calendar quarter is required. The assessment includes the following calculations of doses for

1. total body and maximally exposed organ doses due to liquid effluent via drinking water and eating fish from the river as in § 2.6.

2. total body and maximally exposed organ doses due to gaseous effluents* other than noble gases and tritium as in § 3.7.

3. doses to air offsite due to noble gas γ as in § 3.5 and due to noble gas β as in § 3.6.

The dose calculations are based on liquid and gaseous effluents from the Station during each calendar quarter determined in accord with Tables D3.1.1-1 and D3.2.3-1.

---

*radioactive iodine-131, iodine-133, and radioactive material in particulate form, having half-lives greater than eight days.

Aqueous concentration is estimated according to 2.2 on the basis of quarterly averaged stream flow or stream flow during discharge. If practical, quarterly averaged meteorological conditions concurrent with the quarterly gaseous release being evaluated are used to estimate atmospheric dispersion and deposition. Otherwise, the quarterly dose commitment due to gaseous effluent will be calculated using either reference meteorology or annual averaged meteorology during the year in which the release occurred.

The receptor of the dose is described such that the dose to any resident near the Station is unlikely to be underestimated. That is, the receptor is selected on the basis of the combination of applicable pathways of exposure to gaseous effluent identified in the annual land use census and maximum ground level X/Q at the residence. Conditions (i.e., location, X/Q, and/or pathways) more conservative (i.e. expected to yield higher calculated doses) than appropriate for the maximally exposed individual may be assumed in the dose assessment.

Seasonal appropriateness of exposure pathways may be considered. Exposure by eating fresh vegetation or drinking milk from cows or goats fed fresh forage is an inappropriate assumption during the first or fourth calendar quarter; rather consumption of stored vegetation and stored forage is ordinarily assumed.

Similarly, the liquid effluent-river-fish-man pathway is not ordinarily assumed during the winter quarter.

Factors converting stack-released noble gas to gamma radiation dose from the overhead plume are calculated on the basis of reference meteorological data for the receptor location.

4.2 Releases During 12 Months

The regulation governing the maximum allowable dose or dose commitment to a member of the public from all uranium fuel cycle sources of radiation and radioactive material in the environment is stated in 40 CFR Part 190.10(a). It requires that the dose or dose commitment to a member of the public from all sources not exceed 75 mrem/yr to the thyroid or 25 mrem/yr to the total body or any other organ. DSR 3.4.1.1 requires calculation of the dose at least once per year to assess compliance with the regulation. If conditions warrant, according to provisions of DLCO 3.4.1, an assessment may be made for a portion of a calendar year.

Fuel cycle sources and nuclear power reactors other than the Station itself do not measurably or significantly increase the radioactivity concentration in the vicinity of the Station; therefore, only radiation and radioactivity in the environment attributable to the Station itself are considered in the assessment of compliance with 40 CFR Part 190.

The dose to a member of the public which is due to exposure to radioactive material in liquid and gaseous effluents from the station are ordinarily calculated while the dose attributable to irradiation is evaluated with environmental radiation dosimetry.

The receptor of the dose is selected on the basis of the combination of applicable pathways of exposure to gaseous effluent identified in the annual land use census and minimum atmospheric dispersion factor (maximum ground level X/Q) at his residence. The receptor is described such that the dose to any resident near the Station is not likely to be underestimated. Conditions more conservative than appropriate for the maximally exposed (real) person may be assumed in the dose assessment.

4.2.1 Calculated Doses

Doses to a member of the public are calculated on the basis of liquid and gaseous effluents from the station determined in accord with Tables D3.1.1-1 and D3.2.3-1.

Contributions to the dose due to liquid and gaseous effluent are calculated as described by the equation for:

1. Total body and maximally exposed organ doses due to liquid effluent via drinking water and eating fish from the river as in § 2.6.

2. Total body dose due to noble gas γ as in § 3.8.1.

3. Skin dose due to noble gas β as in § 3.8.2.

4. total body and maximally exposed organ doses due to gaseous effluents* other than noble gases as in § 3.7.

Aqueous radioactive material concentrations are estimated according to § 2.2 on the basis of annual averaged stream flow.

Atmospheric dispersion, deposition, and if calculated, exposure by irradiation from airborne emitters are based on annual averaged meteorological conditions during the year evaluated or, alternatively, on reference meteorological conditions. In the event a portion of the year is examined, average meteorology for the period examined may be used in lieu of annual averaged or reference meteorology data.

Factors converting stack-released noble gas to gamma radiation dose from the overhead plume are calculated on the basis of annual averaged meteorological data for the receptor location.

---

*radioactive iodine, tritium, and radioactive material in particulate form having half-lives greater than eight days.

4.2.2 Environmental Measurements

When assessing compliance with 40 CFR 190, Radiological Environmental Monitoring Program results may be used to indicate actual radioactivity levels in the environment attributable to CNS as an alternate to calculating the concentrations from radioactive effluent measurements. The measured environmental activity levels may thus be used to supplement the evaluation of doses to real persons for assessing compliance with 40 CFR 190.

The dose to a member of the public due to irradiation (external exposure to gamma radiation) from the station and station effluents will be estimated with the aid of environmental TLD, PIC, or similar environmental dosimetry. This will be done by examining the annual dosimetry data for a statistical difference between measurements near the station and background measurements. Alternatively, irradiation attributable to station effluents may be calculated by methods referenced earlier in this section.

The person most exposed to radiation and radioactive material in effluent from Cooper Station is expected to live within ten miles of the Station. Although the Station is in a rural area, the maximum personal exposure due to airborne effluent almost certainly occurs to a resident within three or four miles of it. Since the nearest public water intake downstream of Cooper Station in the Missouri River is about 85 miles, radioactive liquid effluent contamination of potable water is not foreseen to be significant. The other liquid effluent pathway of potential significance, via fish taken from the river, would be evaluated when assessing compliance with 40 CFR 190 only in the event that a significant increase in fishing downstream in the river near the Station occurs during the previous 12 months. Fishing within about ten miles

downstream of the Station is considered to be nonexistent during the first quarter and negligible during the remainder of the year. In the event the fish pathway is evaluated to assess compliance with 40 CFR 190, the fish would be taken from the river within ten miles downstream of the Station.

5.1 Environmental Sampling Program

DSR 4.1.1 requires a minimum radiological environmental monitoring program to be conducted as described in Table D4.1-1 of that document. APPENDIX C of the ODAM provides a numerical listing of the active sample stations along with a description of the sample types, locations, and maps showing their approximate location.

A radiological environmental monitoring program, approved by the Nuclear Regulatory Commission (NRC) was initiated at CNS before initial criticality was attained on February 21, 1974. The program monitors radiation levels in the air, terrestrial, and aquatic environments. Most samples are collected by Nebraska Public Power District (NPPD) personnel. However, all samples are shipped for analysis to a contractor's laboratory where there exists the special facilities required for measurements of extremely low levels of radioactivity.

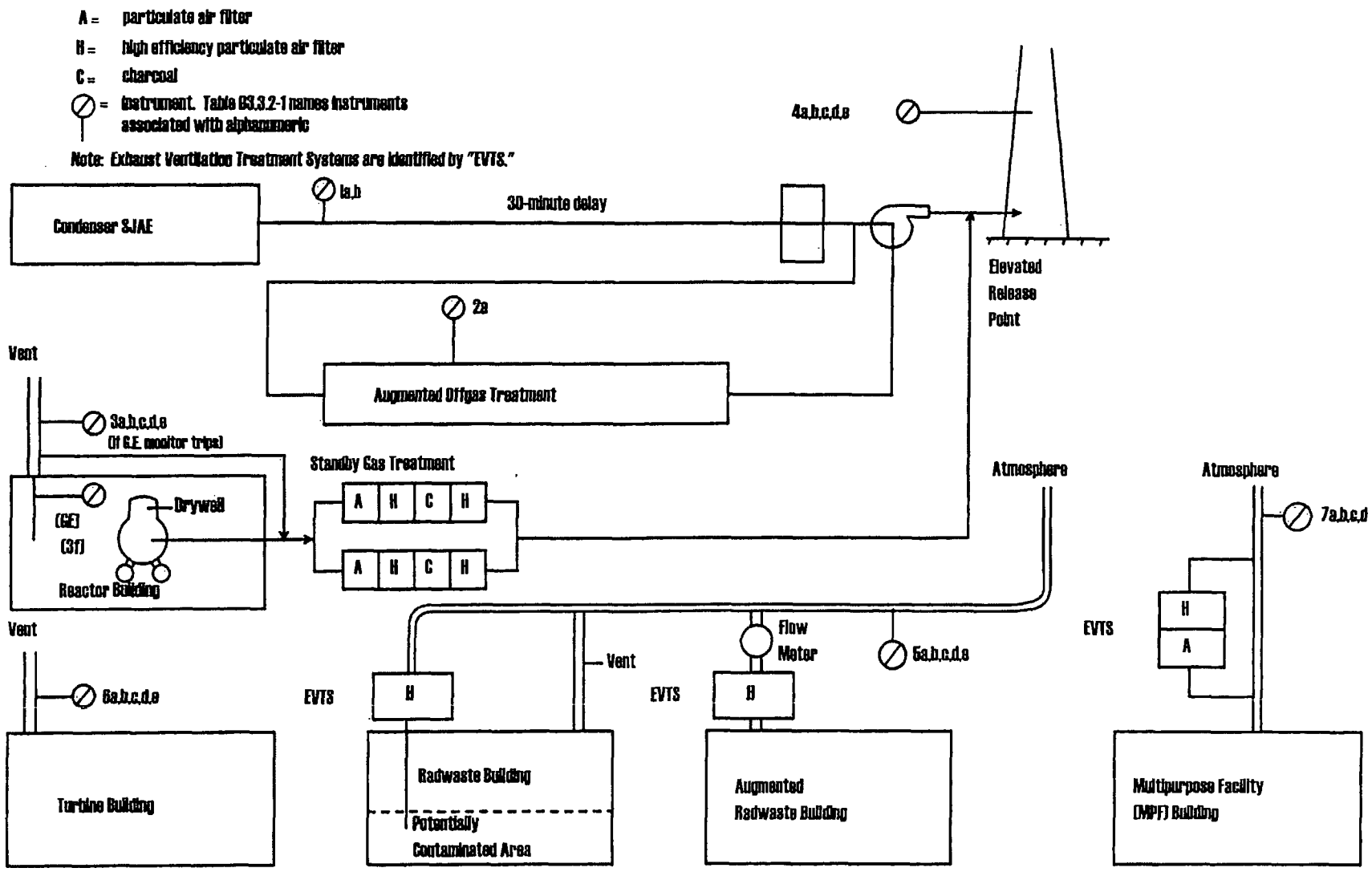

Figure 3-1 Gaseous Effluent Streams, Treatment and Monitoring Equipment, and Discharge Points.

p40242.dsf

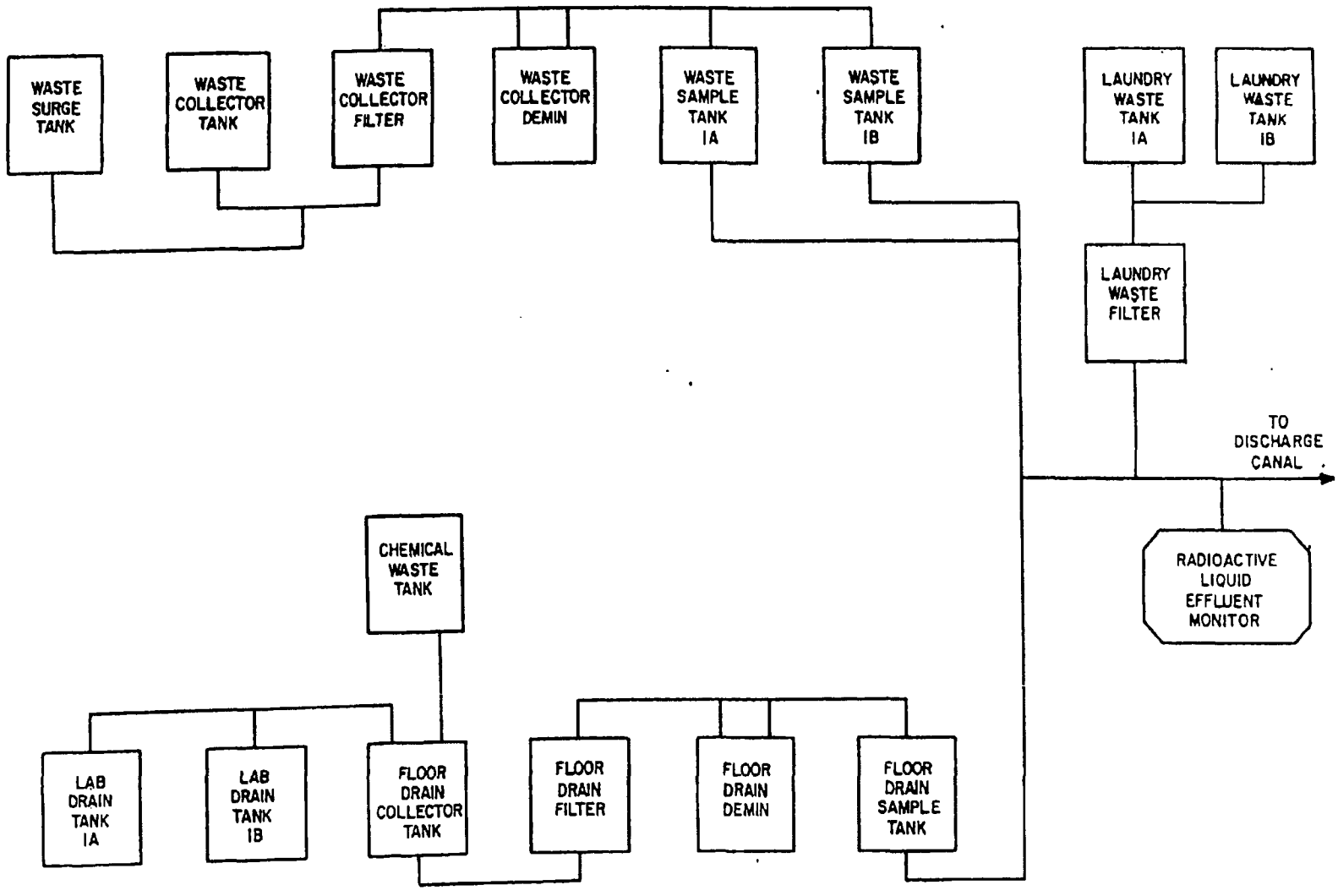

FIGURE 3.14 – LIQUID EFFLUENT STREAM, TREATMENT AND MONITORING, AND DISCHARGE POINT.

Table 3-1

Atmospheric Gaseous Release Points at the

Cooper Nuclear Generating Station

Structure	Reactor Building	Turbine Building	Combined Radwaste-Augmented Radwaste Building	Elevated Release Point
Number of Ducts	1	4	1	1
Duct Size (inches)	96" x 48"	48" x 96"	72" I.D.	14" I.D.
Height of Vent (feet above roof)	15	1.3	Horizontal discharge at rooftop	325 (above grade)
Flow Rate (cfm)	73405	50710(a)	67070	3000
Flow Velocity (fps)	3.82	26.4	39.5	46.7
Exhaust - Winter	70	70	70	60
Temp. (^{o}F) - Summer	90	90	90	90
Release Mode	Partial Elevated	Ground Level	Ground Level	Elevated

(a) Data given is for one operating fan. Multiply data by total number of fans in operation.

Table 3-2

Computed Release of Radioactive Noble Gases

In Gaseous Effluent From Cooper Nuclear Station

	Stack Release		Plant Vents Release	
Nuclide	(Ci/yr)	Fraction	(Ci/yr)	Fraction
Kr-83m	3.60E+01	8.38E-03	0	0
Kr-85m	6.50E+01	1.51E-02	7.10E+01	1.14E-02
Kr-85	2.00E+02	4.66E-02	0	0
Kr-87	2.13E+02	4.96E-02	1.33E+02	2.13E-02
Kr-88	2.13E+02	4.96E-02	2.33E+02	3.74E-02
Kr-89	1.00E+03	2.33E-01	0	0
Xe-133m	3.00E 00	6.99E-04	0	0
Xe-133	1.51E+02	3.52E-02	2.63E+03	4.22E-01
Xe-135m	7.20E+01	1.68E-02	6.96E+02	1.12E-01
Xe-135	2.64E+02	6.15E-02	1.06E+03	1.70E-01
Xe-137	1.20E+03	2.79E-01	0	0
Xe-138	8.77E+02	2.04E-01	1.41E+03	2.26E-01
Total	4294.	1.0	6233.	1.0

Releases computed by BWR-GALE for Cooper Station Base Case gaseous radwaste treatment.

The release rate (Ci/yr) is included only to show the basis of the radionuclide distribution. To estimate the concentrations of radionuclides in a sample in which only the total radioactivity has been measured, multiply the total activity concentration by the fraction of respective radionuclides listed above.

Table 3-3

Dose Conversion Factors for Deriving Radioactive

Noble Gas Effluent Monitor Setpoints

Radionuclide	Factor DF^s_i	for Stack Release[a]	Factor DF^v_i for Ground-Level or Split-Wake Release
	(mrem)/(yr ·μCi/sec)[a]	mrem/μCi[a]	(mrem)/(yr ·μCi/m^3)
Kr-83m	3.5E-9	1.1E-16	7.56 E-2
Kr-85m	1.2E-4	3.8E-12	1.17 E3
Kr-85	1.7E-6	5.5E-14	1.61 E1
Kr-87	5.1E-4	1.6E-11	5.92 E3
Kr-88	1.4E-3	4.4E-11	1.47 E4
Kr-89	6.6E-4	2.1E-11	1.66 E4
Kr-90	--	--	1.56 E4
Xe-131m	3.1E-5	9.7E-13	9.15 E1
Xe-133m	2.3E-5	7.3E-13	2.51 E2
Xe-133	2.5E-5	8.0E-13	2.94 E2
Xe-135m	2.5E-4	7.8E-12	3.12 E3
Xe-135	1.9E-4	6.0E-12	1.81 E3
Xe-137	5.4E-5	1.7E-12	1.42 E3
Xe-138	8.0E-4	2.5E-11	8.83 E3
Xe-139	1.6E-5	5.2E-13	5.02 E3
Ar-41	9.7E-4	3.1E-11	8.84 E3

[a]Based on reference meteorology; applicable at the site boundary, 1,250 meters NNW of the ERP.

Table 3-4

Transfer Factors for Maximum Dose To A Person Beyond The Site And Exclusion Area Boundary Due To Radioactive Noble Gases

Radionuclide	Dose Transfer Factors		
	$A\gamma_{cs_i}$[a] $\frac{mrad}{\mu Ci}$	$A\gamma_{v_i}$ $\frac{mrad}{\mu Ci\ sec/m^3}$	$A\beta_i$ $\frac{mrad}{\mu Ci\ sec/m^3}$
Kr-83m	2.6E-14	6.1E-7	9.13E-6
Kr-85m	4.0E-12	3.9E-5	6.24E-5
Kr-85	5.8E-14	5.4E-7	6.18E-5
Kr-87	1.7E-11	2.0E-4	3.26E-4
Kr-88	4.6E-11	4.8E-4	9.28E-5
Kr-89	2.2E-11	5.5E-4	3.36E-4
Kr-90	--	5.2E-4	2.48E-4
Xe-131m	1.1E-11	4.9E-6	3.52E-5
Xe-133m	8.7E-13	1.0E-5	4.69E-5
Xe-133	9.0E-13	1.1E-5	3.33E-5
Xe-135m	8.3E-12	1.1E-4	2.34E-5
Xe-135	6.3E-12	6.1E-5	7.79E-5
Xe-137	1.8E-12	4.8E-5	4.02E-4
Xe-138	2.7E-11	2.9E-4	1.51E-4
Ar-41	3.2E-11	2.9E-4	1.04E-4

[a]Dose at NNW site boundary

Table 3-5

Transfer Factors for Maximum Dose To A

Person Beyond Site and Exclusion Area Boundary Due To Radioactive Noble Gases

Radionuclide	Dose Transfer Factors		
	$P\gamma_{cs_i}$ [a,b] $\frac{mrem}{\mu Ci}$	$P\gamma_{v_i}$ $\frac{mrem}{\mu Ci\ sec/m^3}$	$S\beta_i$ $\frac{mrem}{\mu Ci\ sec/m^3}$
Kr-83m	1.6E-16	2.4E-9	--
Kr-85m	2.4E-12	3.7E-5	4.6E-5
Kr-85	3.0E-14	5.1E-7	4.2E-5
Kr-87	7.9E-12	1.9E-4	3.1E-4
Kr-88	2.3E-11	4.7E-4	7.5E-5
Kr-89	6.7E-12	5.3E-4	3.2E-4
Kr-90	--	4.9E-4	2.3E-4
Xe-131m	7.7E-13	2.9E-6	1.5E-5
Xe-133m	5.9E-13	8.0E-6	3.1E-5
Xe-133	6.9E-13	9.3E-6	9.7E-6
Xe-135m	3.3E-12	9.9E-5	2.3E-5
Xe-135	3.7E-12	5.7E-5	5.9E-5
Xe-137	5.1E-13	4.5E-5	3.9E-4
Xe-138	1.2E-11	2.8E-4	1.3E-4
Ar-41	1.5E-11	2.8E-4	8.5E-5

[a]Receptor located at 1.1 miles west of Station

[b]Based on reference meteorology at Cooper Station

APPENDIX A

(DELETED)

APPENDIX B

REFERENCE METEOROLOGICAL DATA

Reference meteorological measurements were at Cooper Station during the period from July 1, 1976, through June 30, 1977. The summary data and the computer code, PUFF, were used to generate tables of reference values of X/Q, depleted X/Q, and D/Q herein.

UNDEPLETED MEAN RELATIVE CONCENTRATION (sec/m^3)
ELEVATED RELEASE POINT - STANDARD DISTANCES
COOPER NUCLEAR STATION
NEBRASKA PUBLIC POWER DISTRICT

DISTANCE (miles)

SECTOR	.5	1.5	2.5	3.5	4.5	7.5	15.	25.	35.	45.
NNE	6.7E-09	2.3E-08	2.2E-08	1.8E-08	1.5E-08	1.9E-08	5.8E-09	4.7E-09	3.0E-09	1.8E-09
NE	6.1E-09	1.4E-08	1.4E-08	1.3E-08	1.1E-08	1.5E-08	6.9E-09	2.7E-09	2.4E-09	1.8E-09
ENE	7.0E-09	1.4E-08	1.4E-08	1.2E-08	9.3E-09	1.3E-08	2.9E-09	3.7E-09	1.5E-09	9.4E-10
E	6.5E-09	1.4E-08	1.3E-08	1.2E-08	9.5E-09	1.5E-08	4.0E-09	2.3E-09	1.3E-09	3.0E-10
ESE	5.2E-09	1.2E-08	1.0E-08	9.8E-09	7.9E-09	7.3E-09	4.1E-09	1.8E-09	1.2E-09	6.3E-10
SE	8.2E-09	1.9E-08	1.6E-08	1.4E-08	1.2E-08	1.0E-08	3.7E-09	1.6E-09	1.3E-09	6.5E-10
SSE	1.1E-08	3.2E-08	2.3E-08	2.0E-08	3.4E-08	2.6E-08	6.1E-09	2.2E-09	2.3E-09	1.2E-09
S	1.9E-08	3.4E-08	3.3E-08	2.6E-08	2.5E-08	1.6E-08	4.8E-09	2.4E-09	1.4E-09	1.1E-09
SSW	1.0E-08	4.3E-08	1.7E-08	1.7E-08	1.4E-08	9.5E-09	2.5E-09	1.2E-09	9.9E-10	5.1E-10
SW	4.4E-09	5.0E-08	1.7E-08	1.1E-08	1.1E-08	9.3E-09	3.1E-09	1.5E-09	9.4E-10	7.3E-10
WSW	4.1E-09	6.6E-08	3.2E-08	2.8E-08	1.2E-08	6.6E-09	4.1E-09	1.6E-09	1.1E-09	5.0E-10
W	5.6E-09	6.8E-08	3.8E-08	2.2E-08	1.8E-08	6.4E-09	4.1E-09	1.3E-09	8.2E-10	4.9E-10
WNW	6.1E-09	8.0E-08	5.2E-08	3.4E-08	2.1E-08	9.5E-09	3.2E-09	1.6E-09	1.0E-09	6.6E-10
NW	4.8E-09	8.8E-08	7.4E-08	5.2E-08	3.3E-08	1.4E-08	7.2E-09	3.4E-09	1.9E-09	1.3E-09
NNW	8.4E-09	2.7E-08	7.9E-08	6.9E-08	2.2E-08	2.1E-08	5.5E-09	3.1E-09	2.2E-09	1.6E-09
N	7.5E-09	3.5E-08	3.3E-08	2.5E-08	2.0E-08	1.6E-08	6.8E-09	5.2E-09	3.4E-09	1.1E-09

UNDEPLETED MEAN RELATIVE CONCENTRATION (sec/m^3)
GROUND LEVEL RELEASE POINT - STANDARD DISTANCES
COOPER NUCLEAR STATION
NEBRASKA PUBLIC POWER DISTRICT

DISTANCE (miles)

SECTOR	.5	1.5	2.5	3.5	4.5	7.5	15.	25.	35.	45.
NNE	3.2E-06	5.5E-07	2.2E-07	1.5E-07	8.0E-08	4.4E-08	1.2E-08	4.9E-09	3.2E-09	2.4E-09
NE	2.0E-06	3.3E-07	1.8E-07	1.2E-07	6.1E-08	3.1E-08	9.2E-09	4.1E-09	2.6E-09	1.4E-09
ENE	2.2E-06	2.9E-07	1.5E-07	8.1E-08	5.4E-08	2.0E-08	7.4E-09	3.1E-09	1.6E-09	8.0E-10
E	2.2E-06	3.1E-07	1.5E-07	7.2E-08	5.5E-08	2.3E-08	6.3E-09	3.1E-09	1.8E-09	9.6E-10
ESE	2.4E-06	3.9E-07	1.5E-07	7.8E-08	5.7E-08	2.7E-08	7.4E-09	2.6E-09	1.3E-09	8.1E-10
SE	2.4E-06	3.9E-07	1.6E-07	1.2E-07	6.1E-08	2.5E-08	6.5E-09	1.8E-09	1.0E-09	7.8E-10
SSE	3.8E-06	6.0E-07	2.6E-07	1.5E-07	9.6E-08	4.2E-08	8.7E-09	2.8E-09	1.7E-09	1.2E-09
S	4.6E-06	8.1E-07	3.7E-07	2.0E-07	1.4E-07	6.6E-08	1.8E-08	6.4E-09	3.6E-09	2.1E-09
SSW	2.6E-06	5.0E-07	2.1E-07	1.1E-07	8.4E-08	5.5E-08	5.6E-09	1.5E-09	8.2E-10	4.8E-10
SW	1.9E-06	2.6E-07	1.8E-07	8.1E-08	6.2E-08	2.0E-08	5.2E-09	1.0E-09	3.9E-10	2.5E-10
WSW	2.0E-06	2.8E-07	1.7E-07	9.0E-08	6.4E-08	1.7E-08	3.6E-09	1.3E-09	7.4E-10	5.1E-10
W	1.6E-06	3.7E-07	1.4E-07	1.0E-07	6.5E-08	1.9E-08	6.1E-09	2.4E-09	1.1E-09	6.0E-10
WNW	3.1E-06	4.9E-07	2.2E-07	1.2E-07	1.0E-07	3.7E-08	1.0E-08	4.1E-09	2.1E-09	1.2E-09
NW	4.9E-06	7.8E-07	3.4E-07	2.2E-07	1.3E-07	6.5E-08	1.9E-08	5.0E-09	2.8E-09	2.0E-09
NNW	6.1E-06	9.7E-07	4.1E-07	2.5E-07	1.7E-07	9.5E-08	2.9E-08	1.2E-08	5.8E-09	1.6E-09
N	5.2E-06	8.9E-07	3.9E-07	2.2E-07	1.6E-07	7.4E-08	2.4E-08	1.1E-08	6.1E-09	3.5E-09

DEPLETED MEAN RELATIVE CONCENTRATION (sec/m^3)
ELEVATED RELEASE POINT - STANDARD DISTANCES
COOPER NUCLEAR STATION
NEBRASKA PUBLIC POWER DISTRICT

DISTANCE (miles)

SECTOR	.5	1.5	2.5	3.5	4.5	7.5	15.	25.	35.	45.
NNE	6.6E-09	2.2E-08	2.1E-08	1.7E-08	1.5E-08	1.8E-08	5.4E-09	4.5E-09	2.8E-09	1.6E-09
NE	6.0E-09	1.4E-08	1.4E-08	1.3E-08	1.1E-08	1.5E-08	6.5E-09	2.5E-09	2.2E-09	1.7E-09
ENE	6.9E-09	1.3E-08	1.4E-08	1.1E-08	8.8E-09	1.3E-08	2.7E-09	3.5E-09	1.4E-09	8.6E-10
E	6.4E-09	1.3E-08	1.3E-08	1.1E-08	9.0E-09	1.5E-08	3.9E-09	2.2E-09	1.2E-09	2.6E-10
ESE	5.1E-09	1.1E-08	1.0E-08	9.5E-09	7.6E-09	6.9E-09	3.9E-09	1.6E-09	1.1E-09	5.6E-10
SE	8.1E-09	1.9E-08	1.6E-08	1.3E-08	1.1E-08	9.6E-08	3.4E-09	1.4E-09	1.1E-09	5.5E-10
SSE	1.1E-08	3.1E-08	2.3E-08	2.0E-08	3.3E-08	2.5E-08	5.6E-09	1.9E-09	2.0E-09	9.8E-10
S	1.9E-08	3.3E-08	3.2E-08	2.5E-08	2.4E-08	1.6E-08	4.4E-09	2.0E-09	1.1E-09	8.3E-10
SSW	1.0E-08	4.3E-08	1.7E-08	1.6E-08	1.4E-08	9.0E-09	2.3E-09	1.0E-09	8.6E-10	4.2E-10
SW	4.3E-09	4.9E-08	1.6E-08	1.1E-08	1.0E-08	9.0E-09	2.9E-09	1.4E-09	8.4E-10	6.4E-10
WSW	4.0E-09	6.6E-08	3.2E-08	1.7E-08	1.1E-08	6.3E-09	3.9E-09	1.5E-09	9.5E-10	4.2E-10
W	5.5E-09	6.8E-08	3.7E-08	2.1E-08	1.7E-08	6.0E-09	3.8E-09	1.1E-09	6.8E-10	4.0E-10
WNW	6.0E-09	7.9E-08	5.1E-08	3.3E-08	2.1E-08	9.0E-09	3.0E-09	1.4E-09	8.8E-10	5.5E-10
NW	4.7E-09	8.7E-08	7.3E-08	5.1E-08	3.2E-08	1.3E-08	6.9E-09	3.1E-09	1.7E-09	1.2E-09
NNW	8.3E-09	2.6E-08	7.8E-08	6.8E-08	2.1E-08	2.1E-08	5.1E-09	2.8E-09	2.0E-09	1.5E-09
N	7.3E-09	3.5E-08	3.2E-08	2.4E-08	1.9E-08	1.5E-08	6.3E-09	4.8E-09	3.1E-09	9.4E-10

DEPLETED MEAN RELATIVE CONCENTRATION (sec/m^3)
GROUND LEVEL RELEASE POINT - STANDARD DISTANCES
COOPER NUCLEAR STATION
NEBRASKA PUBLIC POWER DISTRICT

DISTANCE (miles)

SECTOR	.5	1.5	2.5	3.5	4.5	7.5	15.	25.	35.	45.
NNE	2.8E-06	4.5E-07	1.7E-07	1.1E-07	6.1E-08	3.2E-08	7.8E-09	2.7E-09	1.6E-09	1.1E-09
NE	1.7E-06	2.8E-07	1.4E-07	9.1E-08	4.6E-08	2.2E-08	5.7E-09	2.2E-09	1.2E-09	5.6E-10
ENE	1.9E-06	2.4E-07	1.2E-07	6.2E-08	4.0E-08	1.4E-08	4.7E-09	1.7E-09	7.7E-10	3.3E-10
E	1.9E-06	2.5E-07	1.2E-07	5.5E-08	4.1E-08	1.6E-08	3.9E-09	1.5E-09	8.3E-10	3.9E-10
ESE	2.1E-06	3.2E-07	1.2E-07	6.0E-08	4.3E-08	1.9E-08	4.6E-09	1.5E-09	6.3E-10	3.9E-10
SE	2.1E-06	3.2E-07	1.3E-07	9.0E-08	4.6E-08	1.7E-08	3.9E-09	9.5E-10	5.0E-10	3.6E-10
SSE	3.3E-06	5.0E-07	2.1E-07	1.2E-07	7.3E-08	3.0E-08	5.4E-09	1.6E-09	8.5E-10	5.2E-10
S	4.0E-06	6.7E-07	3.0E-07	1.6E-07	1.1E-07	4.8E-08	1.2E-08	3.7E-09	1.9E-09	9.4E-10
SSW	2.3E-06	4.2E-07	1.7E-07	8.1E-08	6.3E-08	3.9E-09	3.4E-09	8.4E-10	4.2E-10	2.1E-10
SW	1.7E-06	2.2E-07	1.4E-07	6.1E-08	4.5E-08	1.4E-08	3.1E-09	5.8E-10	1.8E-10	1.1E-10
WSW	1.7E-06	2.3E-07	1.4E-07	6.8E-08	4.7E-08	1.2E-08	2.1E-09	7.0E-10	3.8E-10	2.5E-10
W	1.4E-06	3.0E-07	1.1E-07	7.7E-08	4.8E-08	1.3E-08	3.7E-09	1.2E-09	5.0E-10	2.7E-10
WNW	2.7E-06	4.0E-07	1.7E-07	9.2E-08	7.6E-08	2.7E-08	6.3E-09	2.3E-09	1.0E-09	5.8E-10
NW	4.1E-06	6.5E-07	2.7E-07	1.7E-07	1.0E-07	4.7E-08	1.2E-08	2.9E-09	1.5E-09	9.3E-10
NNW	5.4E-06	8.1E-07	3.3E-07	1.9E-07	1.3E-07	6.9E-08	1.9E-08	6.5E-09	3.0E-09	7.6E-10
N	4.6E-06	7.5E-07	3.1E-07	1.7E-07	1.3E-07	5.4E-08	1.5E-08	5.9E-09	3.0E-09	1.6E-09

MEAN RELATIVE DEPOSITION (m^{-2})
ELEVATED RELEASE POINT - STANDARD DISTANCES
COOPER NUCLEAR STATION
NEBRASKA PUBLIC POWER DISTRICT

DISTANCE (miles)

SECTOR	.5	1.5	2.5	3.5	4.5	7.5	15.	25.	35.	45.
NNE	2.6E-10	3.0E-10	1.8E-10	1.3E-10	9.2E-11	5.7E-11	2.3E-11	1.3E-11	8.1E-12	5.8E-12
NE	1.9E-10	2.0E-10	1.2E-10	8.2E-11	6.1E-11	4.0E-11	1.6E-11	8.3E-12	6.0E-12	3.8E-12
ENE	1.4E-10	1.4E-10	8.7E-11	6.2E-11	4.5E-11	2.9E-11	1.1E-11	5.7E-12	3.8E-12	2.6E-12
E	9.6E-11	9.5E-11	6.4E-11	4.6E-11	3.6E-11	2.3E-11	7.6E-12	3.7E-12	2.5E-12	8.5E-13
ESE	7.7E-11	1.0E-10	6.6E-11	4.8E-11	3.8E-11	2.3E-11	1.2E-11	5.2E-12	3.5E-12	2.0E-12
SE	2.3E-10	2.3E-10	1.4E-10	1.0E-10	7.5E-11	4.0E-11	1.7E-11	7.5E-12	4.8E-12	3.3E-12
SSE	4.2E-10	4.5E-10	2.6E-10	1.7E-10	1.6E-10	7.7E-11	3.3E-11	1.6E-11	1.1E-11	7.6E-12
S	6.4E-10	5.1E-10	3.0E-10	2.0E-10	1.5E-10	7.2E-11	2.9E-11	1.6E-11	1.1E-11	6.7E-12
SSW	3.0E-10	3.4E-10	1.4E-10	9.7E-11	7.2E-11	3.5E-11	1.3E-11	6.5E-12	4.9E-12	2.6E-12
SW	7.9E-11	2.1E-10	8.4E-11	5.0E-11	4.0E-11	2.1E-11	7.4E-12	3.8E-12	2.4E-12	1.8E-12
WSW	5.7E-11	2.3E-10	1.0E-10	6.2E-11	4.3E-11	2.3E-11	8.5E-12	4.3E-12	2.7E-12	1.8E-12
W	1.0E-10	3.4E-10	1.6E-10	9.8E-11	6.9E-11	2.9E-11	1.3E-11	6.2E-12	3.4E-12	2.0E-12
WNW	1.2E-10	4.1E-10	2.1E-10	1.3E-10	8.3E-11	3.9E-11	1.4E-11	7.0E-12	4.1E-12	2.6E-12
NW	1.2E-10	3.8E-10	2.1E-10	1.3E-10	8.2E-11	4.1E-11	1.7E-11	1.0E-11	6.3E-12	3.9E-12
NNW	2.3E-10	2.6E-10	3.0E-10	2.0E-10	1.1E-10	6.0E-11	2.1E-11	1.1E-11	6.1E-12	3.9E-12
N	2.5E-10	3.7E-10	2.3E-10	1.5E-10	1.2E-10	7.1E-11	2.9E-11	1.7E-11	1.3E-11	5.2E-12

MEAN RELATIVE DEPOSITION (m^{-2})
GROUND LEVEL RELEASE POINT - STANDARD DISTANCES
COOPER NUCLEAR STATION
NEBRASKA PUBLIC POWER DISTRICT

DISTANCE (miles)

SECTOR	.5	1.5	2.5	3.5	4.5	7.5	15.	25.	35.	45.
NNE	8.0E-09	1.2E-09	5.2E-10	3.1E-10	2.0E-10	9.9E-11	3.3E-11	1.6E-11	9.6E-12	6.0E-12
NE	5.1E-09	7.6E-10	3.4E-10	2.0E-10	1.3E-10	6.9E-11	2.4E-11	1.1E-11	6.7E-12	4.1E-12
ENE	4.0E-09	6.1E-10	2.7E-10	1.6E-10	1.1E-10	4.8E-11	2.0E-11	7.6E-12	3.9E-12	2.5E-12
E	4.0E-09	6.1E-10	2.8E-10	1.6E-10	1.1E-10	5.0E-11	1.8E-11	8.0E-12	4.2E-12	2.3E-12
ESE	5.3E-09	8.2E-10	3.5E-10	2.0E-10	1.4E-10	6.7E-11	2.1E-11	9.6E-12	5.6E-12	3.8E-12
SE	6.4E-09	9.6E-10	3.9E-10	2.4E-10	1.6E-10	7.1E-11	2.5E-11	1.1E-11	6.8E-12	4.1E-12
SSE	1.0E-08	1.5E-09	6.1E-10	3.5E-10	2.3E-10	1.1E-10	3.9E-11	1.8E-11	1.1E-11	6.5E-12
S	8.7E-09	1.4E-09	5.8E-10	3.3E-10	2.3E-10	1.1E-10	4.0E-11	1.8E-11	1.0E-11	6.3E-12
SSW	3.7E-09	6.0E-10	2.6E-10	1.5E-10	1.0E-10	5.9E-11	1.5E-11	5.0E-12	3.0E-12	1.8E-12
SW	2.9E-09	4.4E-10	2.2E-10	1.2E-10	8.3E-11	3.5E-11	1.1E-11	3.0E-12	1.4E-12	8.7E-13
WSW	2.8E-09	4.6E-10	2.2E-10	1.3E-10	9.0E-11	3.7E-11	1.1E-11	4.2E-12	2.2E-12	1.4E-12
W	3.6E-09	5.9E-10	2.6E-10	1.5E-10	1.0E-10	4.6E-11	1.7E-11	6.9E-12	3.8E-12	2.2E-12
WNW	5.6E-09	8.7E-10	3.8E-10	2.3E-10	1.6E-10	7.3E-11	2.5E-11	1.0E-11	6.2E-12	3.8E-12
NW	1.0E-08	1.6E-09	6.8E-10	4.1E-10	2.7E-10	1.3E-10	4.5E-11	1.8E-11	1.1E-11	6.8E-12
NNW	1.1E-08	1.6E-09	6.9E-10	4.1E-10	2.8E-10	1.4E-10	5.2E-11	2.3E-11	1.3E-11	5.2E-12
N	1.2E-08	1.9E-09	8.1E-10	4.6E-10	3.2E-10	1.5E-10	5.8E-11	2.7E-11	1.7E-11	1.0E-11

APPENDIX C

ENVIRONMENTAL RADIATION MONITORING PROGRAM

Appendix C contains the active environmental sampling stations for the Environmental Radiation Monitoring Program at Cooper Nuclear Station. Included in this appendix is a description of each sample and sample station along with maps showing the approximate location of each sampling station.

REMP SAMPLE STATION DESCRIPTION
SAMPLE TYPES AND SAMPLE LOCATIONS

(See Sample Station Locations Map - Figures C-1 and C-2)

Sample Station[a]	Sample Description - Type and Location	
No. 1	Type: (1)	Air Particulate and Charcoal Filters
	(2)	Environmental Thermoluminescent Dosimetry
	Location:	Outside the northwest edge of fence, east of the gate to the LLRW storage pad on the CNS site, NW¼, S32, T5N, R16E, Nemaha County, Nebraska.
No. 2	Type: (1)	Air Particulate and Charcoal Filters
	(2)	Environmental Thermoluminescent Dosimetry
	Location:	On north side of county road access to the south portion of the CNS site, SW¼, S32, T5N, R16E, Nemaha County, Nebraska.
No. 3	Type: (1)	Air Particulate and Charcoal Filters
	(2)	Environmental Thermoluminescent Dosimetry
	Location:	Located on the north side of the Brownville State Recreation Park access road near water gauging station, SE¼, S18, T5N, R16E, Nemaha County, Nebraska.
No. 4	Type: (1)	Air Particulate and Charcoal Filters
	(2)	Environmental Thermoluminescent Dosimetry
	Location:	Located ½ mile south of Phelps City, Missouri, on west side of Highway "U," NE¼, S2, T64N, R42W, Atchison County, Missouri.
No. 5	Type: (1)	Air Particulate and Charcoal Filters
	(2)	Environmental Thermoluminescent Dosimetry
	Location:	One-fourth mile south and ¼ mile east of Langdon, Missouri, on north side of road, west of railroad tracks, SW¼, S18, T64N, R41W, Atchison County, Missouri.
No. 6	Type: (1)	Air Particulate and Charcoal Filters
	(2)	Environmental Thermoluminescent Dosimetry
	Location:	One mile west of the end of Missouri State Highway "U," SW corner of the intersection, NW¼, S34, T64N, R42W, Atchison County, Missouri.

Sample Station	Sample Description - Type and Location	
No. 7	Type: (1)	Air Particulate and Charcoal Filters
	(2)	Environmental Thermoluminescent Dosimetry
	Location:	One-quarter mile east of Highway 67 at Nemaha on north side of road, SW¼, S6, T4N, R16E, Nemaha County, Nebraska.
No. 8	Type: (1)	Air Particulate and Charcoal Filters
	(2)	Environmental Thermoluminescent Dosimetry
	Location:	One-half mile north, ¾ mile west and ¾ mile north of Nemaha on west side of road adjacent to the transmission line, NE¼, S35, T5N, R15E, Nemaha County, Nebraska.
No. 9	Type: (1)	Air Particulate and Charcoal Filters
	(2)	Environmental Thermoluminescent Dosimetry
	Location:	Four miles north of Highway No. 136 on Highway No. 67. One mile east of Highway No. 67 and ½ mile north on west side of road, SW¼, S26, T6N, R15E, Nemaha County, Nebraska.
No. 10	Type: (1)	Air Particulate and Charcoal Filters
	(2)	Environmental Thermoluminescent Dosimetry
	Location:	One mile north of Barada, Nebraska, in SW corner of intersection, NE¼, S14, T3N, R16E, Richardson County, Nebraska.
No. 11	Type: (1)	Water - Ground
	Location:	Plant well water supply header at well pits, NW¼, S32, T5N, R16E, Nemaha County, Nebraska.
No. 12	Type: (1)	Water - River
	Location:	Sample (1) will be taken from the Missouri River immediately upstream from the Plant Intake Structure (River Mile 532.5). During periods when conditions warrant, Station 35 may be used as an alternate to Station 12 (upstream collection site) for sample type (1).
No. 20	Type: (1)	Environmental Thermoluminescent Dosimetry
	Location:	On NNW boundary of NPPD property, east side of county road, SE¼, S30, T5N, R16E, Nemaha County, Nebraska.

Sample Station	Sample Description - Type and Location	
No. 28	Type: (1)	Water - River
	(2)	Fish
	(3)	Sediment from Shoreline
	Location:	Samples (1) and (3) are taken from the Missouri River or its shore, downstream, near River Mile 530. Sample (2) is taken from the Missouri river ½ to 3 miles downstream from the plant site.
No. 35	Type: (1)	Fish
	(2)	Water - River (Alternate Site)
	(3)	Food Products - Broadleaf Vegetation
	Location:	Sample (1) is taken from the Missouri River about one to three miles above CNS intake structure. During periods when conditions warrant, Station 35 may be used as an alternate to Station 12 (upstream collection site) for sample type (2). Samples (2) and (3) are taken about ¼ mile south of the Brownville State Recreation Area in Sector A.
No. 44	Type: (1)	Environmental Thermoluminescent Dosimetry
	Location:	One-quarter mile south of Auburn Country Club on Highway No. 75, ½ mile east of Highway No. 75 at fence line north of county road, SE¼, S27, T5N, R14E, Nemaha County, Nebraska.
No. 47	Type: (1)	Water - Ground
	Location:	At Falls City Municipal Water Supply Wells approximately 2 miles south of Rulo, Nebraska (out of Main Header Flow Meter), east side of road, SW¼, S20, T1N, R18E, Richardson County, Nebraska.
No. 56	Type: (1)	Environmental Thermoluminescent Dosimetry
	Location:	One and one-fourth mile SW of Langdon, Missouri, on Highway "U", on the right side of the highway, NW¼, S23, T64N, R42W, Atchison County, Missouri.
No. 58	Type: (1)	Environmental Thermoluminescent Dosimetry
	Location:	Three miles south of Brownville, Nebraska, on county road, at the SE corner of the intersection, with the farm road leading to Sample Station No. 2, SE¼, S31, T5N, R16E, Nemaha County, Nebraska.
No. 59	Type: (1)	Environmental Thermoluminescent Dosimetry
	Location:	One mile SSE of the CNS Elevated Release Point, in the vicinity of the levee at the south boundary of NPPD property, SE¼, S32, T5N, R16E, Nemaha County, Nebraska.

Sample Station	Sample Description - Type and Location	
No. 66	Type: (1)	Environmental Thermoluminescent Dosimetry
	Location:	Two miles south of Nemaha, Nebraska, on Highway No. 67 - east side of highway, NW¼, S19, T4N, R16E, Nemaha County, Nebraska.
No. 67	Type: (1)	Environmental Thermoluminescent Dosimetry
	Location:	Two miles west of Brownville, Nebraska, on Highway No. 136, then north 1½ miles on county road, and east ½ mile, on north side of road, NE¼, S11, T5N, R15E, Nemaha County, Nebraska.
No. 71	Type: (1)	Environmental Thermoluminescent Dosimetry
	Location:	Two miles east of Phelps City, Missouri, on Highway No. 136, then south 1½ miles on county road, and west ¼ mile, SE¼, S6, T64N, R41W, Atchison County, Missouri.
No. 79	Type: (1)	Environmental Thermoluminescent Dosimetry
	Location:	One and ⅞ miles south of Brownville, Nebraska, on the east side of the paved road, NPPD property, SE¼, S30, T5N, R16E, Nemaha County, Nebraska.
No. 80	Type: (1)	Environmental Thermoluminescent Dosimetry
	Location:	Two and ⅛ miles south of Brownville, Nebraska, on the east side of the paved road, NPPD property, NE¼, S31, T5N, R16E, Nemaha County, Nebraska.
No. 81	Type: (1)	Environmental Thermoluminescent Dosimetry
	Location:	Two and ⅜ miles south of Brownville, Nebraska, in the NE corner of the intersection of the paved county road and the CNS access road, NPPD property, NE¼, S31, T5N, R16E, Nemaha County, Nebraska.
No. 82	Type: (1)	Environmental Thermoluminescent Dosimetry
	Location:	Seven eighths mile south of Cooper Nuclear Station in field, about ½ mile east of farm buildings on NPPD property, SW¼, S32, T5N, R16E, Nemaha County, Nebraska.
No. 83	Type: (1)	Environmental Thermoluminescent Dosimetry
	Location:	Two and ¼ miles south of Nemaha, Nebraska, on Highway No. 67, then east one mile to the junction of the driveway and county road on the east side of the driveway, NE¼, S19, T4N, R16E, Nemaha County, Nebraska.

Sample Station	Sample Description - Type and Location	
No. 84	Type: (1)	Environmental Thermoluminescent Dosimetry
	Location:	Two and ½ miles west of Brownville, Nebraska, on the south side of Highway No. 136, west of school, NW¼, S22, T5N, R15E, Nemaha County, Nebraska.
No. 85	Type: (1)	Environmental Thermoluminescent Dosimetry
	Location:	One mile east of Brownville, Nebraska, on Highway No. 136, then north ¼ mile on the east side of the county road, NE¼, S33, T65N, R42W, Atchison County, Missouri.
No. 86	Type: (1)	Environmental Thermoluminescent Dosimetry
	Location:	One mile west of Phelps City, Missouri, on Highway No. 136, then north 1½ miles on Highway "D" - on the west side of road, SE¼, S22, T65N, R42W, Atchison County, Missouri.
No. 87	Type: (1)	Environmental Thermoluminescent Dosimetry
	Location:	One mile west of Phelps City, Missouri, on Highway No. 136, then south ½ mile on county road and ¾ mile west on county road to the end of the road, NW¼, S3, T64N, R42W, Atchison County, Missouri.
No. 88	Type: (1)	Environmental Thermoluminescent Dosimetry
	Location:	One mile west of Phelps City, Missouri, on Highway No. 136, then south 2 miles, west side of road, NW¼, S11, T64N, R42W, Atchison County, Missouri.
No. 89	Type: (1)	Environmental Thermoluminescent Dosimetry
	Location:	Two and ½ miles south of Phelps City, Missouri, on Highway "U", then ½ mile west in the SE corner of the county road intersection, NE¼, S14, T64N, R42W, Atchison County, Missouri.
No. 90	Type: (1)	Environmental Thermoluminescent Dosimetry
	Location:	One and ½ miles west and ¾ mile south of Langdon, Missouri, on Highway "U", then ¼ mile west, SW¼, S23, T64N, R42W, Atchison County, Missouri.

Sample Station	Sample Description - Type and Location	
No. 91	Type: (1)	Environmental Thermoluminescent Dosimetry
	Location:	One half mile west of Rock Port, Missouri, on the south side of the intersection of Highway No. 136 and Highway No. 275 at the south side of the water tower, NW¼, S28, T65N, R41W, Atchison County, Missouri.
No. 94	Type: (1)	Environmental Thermoluminescent Dosimetry
	Location:	One quarter mile south of Langdon, Missouri, on the west side of the road, NE¼, S24, T64N, R42W, Atchison County, Missouri.
No. 96	Type: (1)	Food Products - Broadleaf Vegetation
	Location:	Approximately 1 mile south of Brownville, Nebraska, along paved road in the road ditch in Sector R, SW¼, S19, T5N, R16E, Nemaha County, Nebraska.
No. 99	Type: (1)	Milk - Nearest Producer
	Location:	One and ¼ miles south of Shubert, Nebraska, on the west side of Highway No. 67, NE¼, S24, T3N, R15E, Richardson County, Nebraska.
No. 101	Type: (1)	Food Products - Broadleaf Vegetation
	Location:	Five and ½ miles east and ½ mile north of Rock Port, Missouri, near the junction of Highway No. 136 and Highway No. 59, in Sector D. Encompasses portions of several sections, T65N, R40W, Atchison County, Missouri.
No. 102	Type: (1)	Milk (Other Producer)
	Location:	Two miles south and 3 miles east, then ½ mile south of Shubert, Nebraska, NW¼, S28, T3N, R16E, Richardson County, Nebraska.
No. 103	Type: (1)	Milk (Other Producer)
	Location:	Four miles south and 3 miles west of Auburn, Nebraska, NE¼, NE¼, S13, T4N, R13E, Nemaha County, Nebraska.

NOTES:

(a) Sample Station numbers missing from the sequence are for inactive or discontinued Sample Stations.

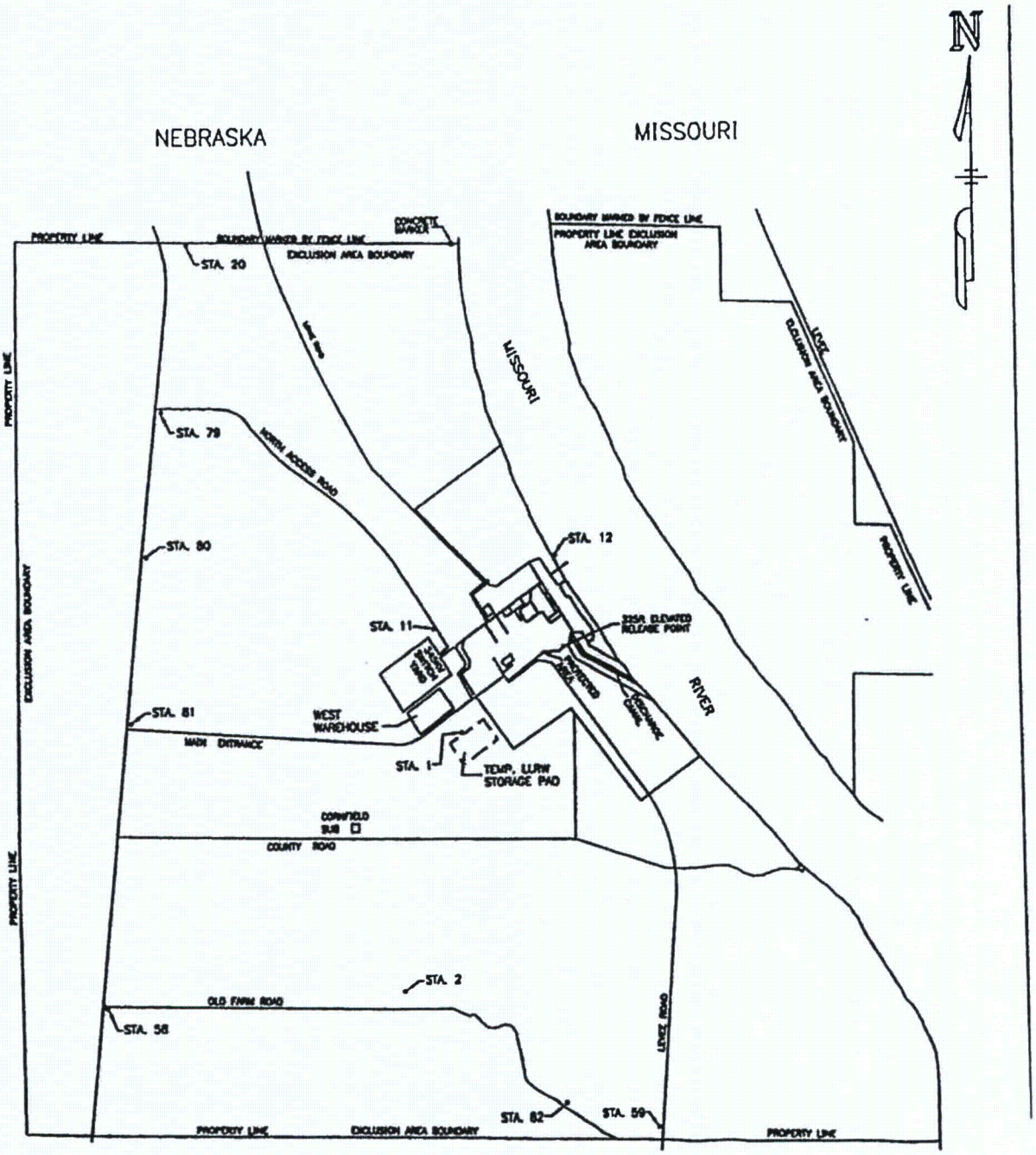

NEBRASKA PUBLIC POWER DISTRICT
COOPER NUCLEAR STATION

Site Sampling Station
Location Map

FIGURE C-1

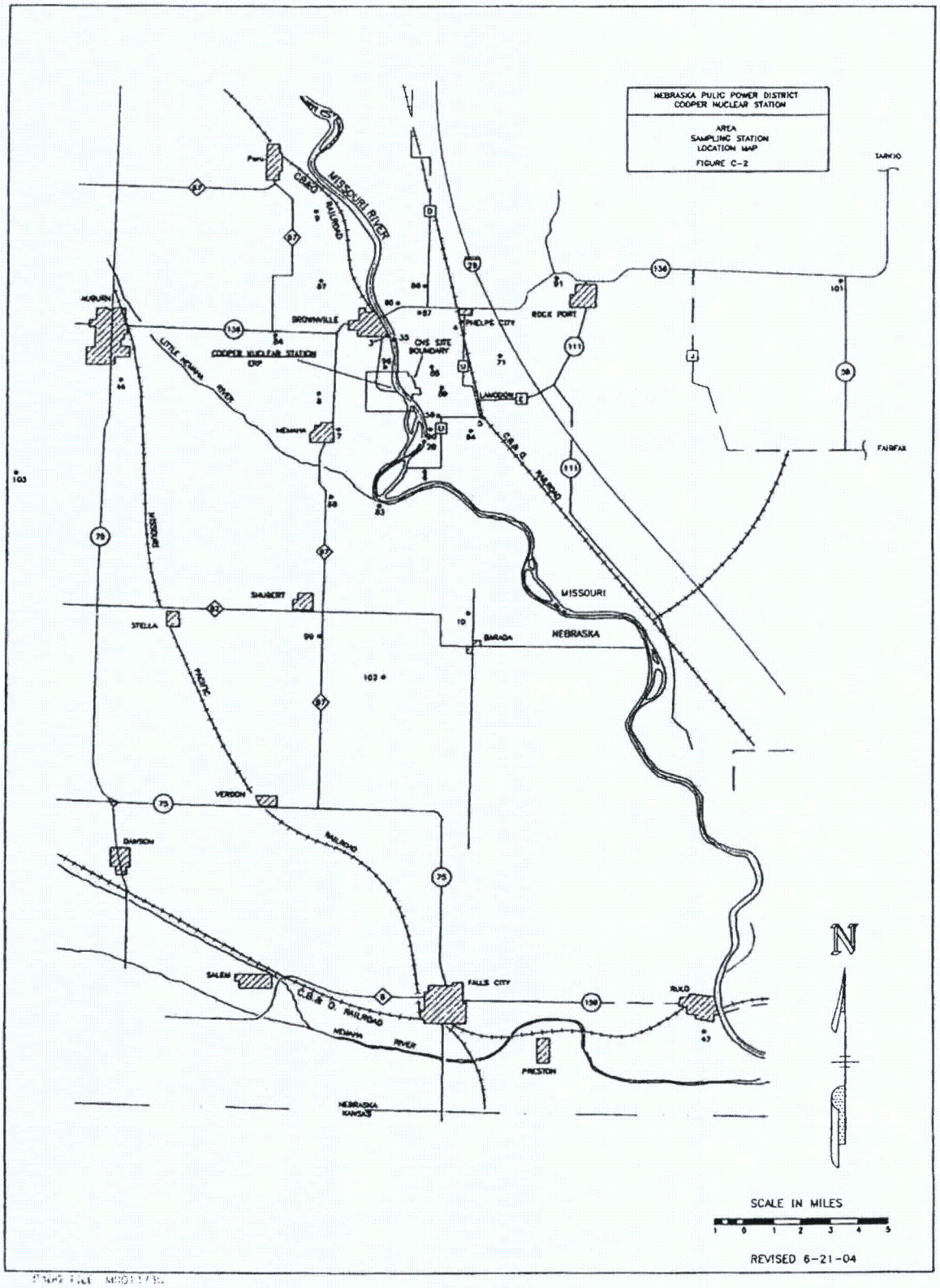
NEBRASKA PULIC POWER DISTRICT
COOPER NUCLEAR STATION
AREA
SAMPLING STATION
LOCATION MAP
FIGURE C-2
MISSOURI RIVER
C.B.&Q. RAILROAD
AUBURN
BROWNVILLE
PHELPS CITY
ROCK PORT
COOPER NUCLEAR STATION
CNS SITE BOUNDARY
LITTLE NEMAHA RIVER
NEMAHA
LAMOSON
TARKIO
FAIRFAX
MISSOURI
SHUBERT
STELLA
BARADA
NEBRASKA
PACIFIC
VERDON
DAWSON
SALEM
FALLS CITY
RULO
PRESTON
NEMAHA RIVER
NEBRASKA
KANSAS
N
SCALE IN MILES
1 0 1 2 3 4 5
REVISED 6-21-04

APPENDIX D

ODAM SPECIFICATIONS

OFFSITE DOSE ASSESSMENT MANUAL
APPENDIX D

TABLE OF CONTENTS

D 1.0 Use and Application . . . . . D 1.0-1

D 2.0 Definitions . . . . . D 2.0-1

D 3.0 ODAM Specifications Applicability . . . . . D 3.0-1

D 3.1 LIQUID EFFLUENTS
D 3.1.1 Liquid Effluents Concentration . . . . . D 3.1-1
D 3.1.2 Liquid Waste Concentration . . . . . D 3.1-5
D 3.1.3 Liquid Effluents Dose . . . . . D 3.1-6
D 3.1.4 Outside Temporary Storage of Radioactive Liquid . . . . . D 3.1-9

D 3.2 GASEOUS EFFLUENTS
D 3.2.1 Gaseous Effluents Concentration . . . . . D 3.2-1
D 3.2.2 Noble Gas Dose . . . . . D 3.2-3
D 3.2.3 Iodine and Particulates . . . . . D 3.2-5
D 3.2.4 Offgas Treatment System . . . . . D 3.2-10
D 3.2.5 Exhaust Ventilation Treatment System . . . . . D 3.2-12
D 3.2.6 Hydrogen Concentration . . . . . D 3.2-14
D 3.2.7 Primary Containment Venting and Purging . . . . . D 3.2-15

D 3.3 INSTRUMENTATION
D 3.3.1 Liquid Effluent Monitoring . . . . . D 3.3-1
D 3.3.2 Gaseous Effluent Monitoring . . . . . D 3.3-8

D 3.4 LIQUID/GASEOUS DOSE
D 3.4.1 Liquid/Gaseous Effluents Dose . . . . . D 3.4-1

D 3.5 SOLID RADIOACTIVE WASTE
D 3.5.1 Solid Radioactive Waste . . . . . D 3.5-1

D 4.0 MONITORING PROGRAM
D 4.1 Monitoring Program Compliance . . . . . D 4.1-1
D 4.2 Monitoring Program Concentration . . . . . D 4.2-1
D 4.3 Monitoring Program Dose . . . . . D 4.3-1

D 5.0 MISCELLANOUS PROGRAMS/REPORTS
D 5.1 Interlaboratory Comparison Program . . . . . D 5.1-1
D 5.2 Annual Radiological Environmental Report . . . . . D 5.2-1
D 5.3 Radioactive Effluent Release Report . . . . . D 5.3-1
D 5.4 Special Reports . . . . . D 5.4-1
D 5.5 Major Changes to Radioactive Waste Treatment Systems (Liquid, Gaseous, and Solid) . . . . . D 5.5-1

COPY

D 1.0 USE AND APPLICATION

The Offsite Dose Assessment Manual (ODAM) Specifications are contained in Section 3.0 of this appendix. They contain operational requirements, Surveillance Requirements, and reporting requirements. Additionally, the Required Actions and associated Completion Times for degraded Conditions are specified. The format is consistent with the Technical Specifications (Appendix A to the CNS Operating License).

The definitions contained in Technical Specifications Section 1.1, "Definitions," apply to the ODAM Specifications. Defined terms are shown in all capital letters, consistent with the Technical Specifications. Any definitions not appearing in the Technical Specifications are stated in Section D 2.0, Definitions of the ODAM.

The rules of usage for the ODAM Specifications are the same as those for the Technical Specifications. These rules are found in Technical Specifications Sections 1.2, "Logical Connectors;" 1.3, "Completion Times;" and 1.4; "Frequency."

COPY

D 2.0 DEFINITIONS

SITE AND EXCLUSION AREA BOUNDARY - The SITE AND EXCLUSION AREA BOUNDARY around Cooper Nuclear Station are defined in Figure D2.a-1 below.

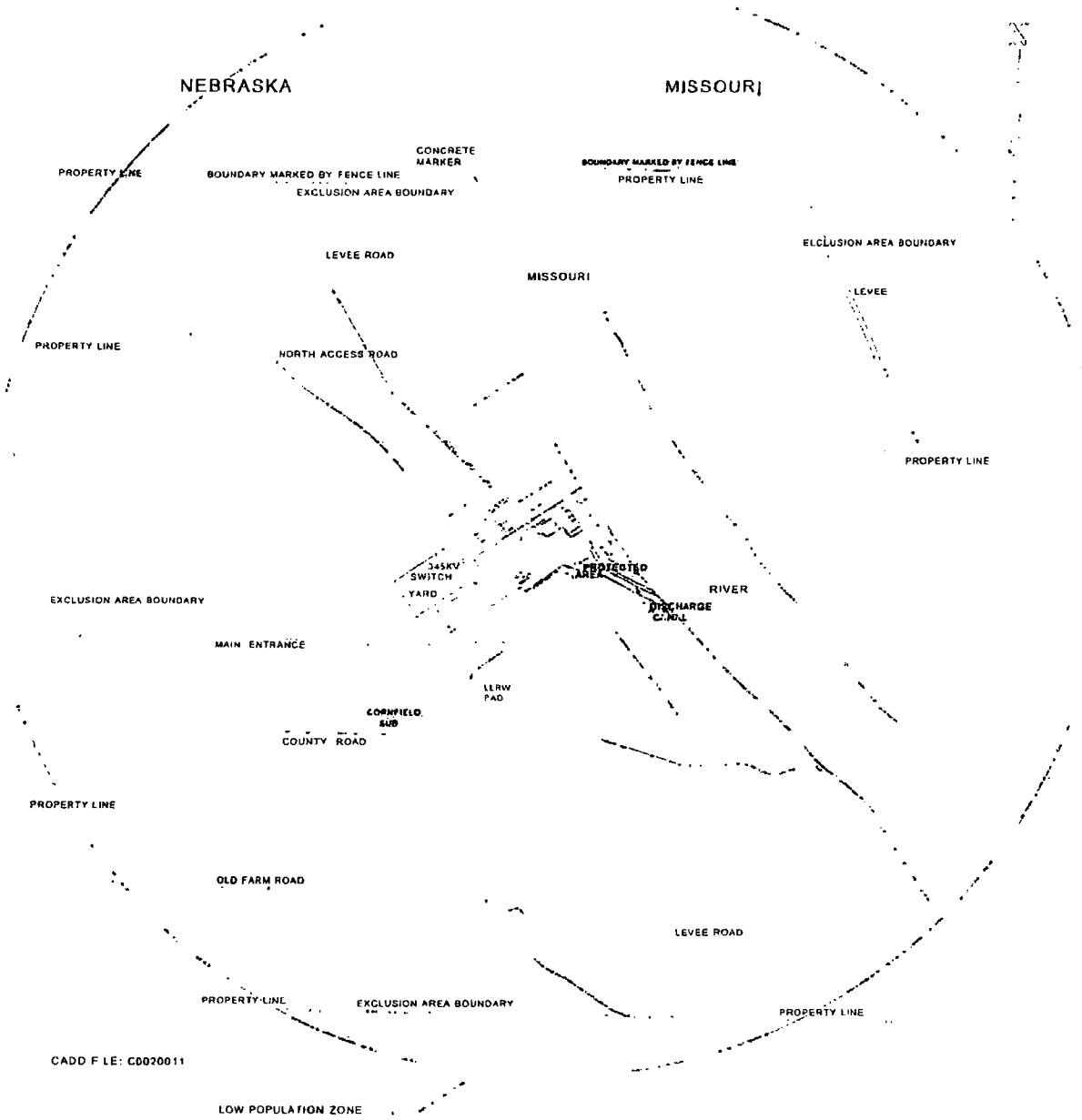

Figure D2.a-1
SITE AND EXCLUSION AREA BOUNDARY

D 2.0 DEFINITIONS

(continued)

SOURCE CHECK - A SOURCE CHECK shall be the qualitative assessment of channel response when the channel sensor is exposed to a source of radioactivity.

COPY

D 3.0 ODAM Specifications Applicability

DLCO 3.0.1 DLCOs shall be met during the MODES or other specified conditions in the Applicability, except as provided in DLCO 3.0.2.

DLCO 3.0.2 Upon discovery of a failure to meet a DLCO, the Required Actions of the associated Conditions shall be met, except as provided in DLCO 3.0.5.

If the DLCO is met or is no longer applicable prior to expiration of the specified Completion Time(s), completion of the Required Action(s) is not required, unless otherwise stated.

DLCO 3.0.3 When a DLCO is not met and the associated ACTIONS are not met, an associated ACTION is not provided, or if directed by the associated ACTIONS, action shall be initiated to:

a. Restore compliance with the DLCO or associated ACTIONS, and

b. Enter the circumstances into the Corrective Action Program.

----------NOTE----------
DLCO 3.0.3.b shall be completed if DLCO 3.0.3 is entered.

Exceptions to this Specification are stated in the individual Specifications.

DLCO 3.0.4 Not Applicable to ODAM Specifications.

DLCO 3.0.5 Equipment removed from service or declared inoperable to comply with ACTIONS may be returned to service under administrative control solely to perform testing required to demonstrate its OPERABILITY or the OPERABILITY of other equipment. This is an exception to DLCO 3.0.2 for the system returned to service under administrative control to perform the testing required to demonstrate OPERABILITY.

D 3.0 ODAM Specifications Applicability

DSR 3.0.1 DSRs shall be met during the MODES or other specified conditions in the Applicability for individual DLCOs, unless otherwise stated in the DSR. Failure to meet a Surveillance, whether such failure is experienced during the performance of the Surveillance or between performances of the Surveillance, shall be failure to meet the DLCO. Failure to perform a Surveillance within the specified Frequency shall be failure to meet the DLCO except as provided in DSR 3.0.3. Surveillances do not have to be performed on inoperable equipment or variables outside specified limits.

DSR 3.0.2 The specified Frequency for each DSR is met if the Surveillance is performed within 1.25 times the interval specified in the Frequency, as measured from the previous performance or as measured from the time a specified condition of the Frequency is met.

For Frequencies specified as "once," the above interval extension does not apply.

If a Completion Time requires periodic performance on a "once per . . ." basis, the above Frequency extension applies to each performance after the initial performance.

Exceptions to this Specification are stated in the individual Specifications.

DSR 3.0.3 If it is discovered that a Surveillance was not performed within its specified Frequency, then compliance with the requirement to declare the DLCO not met may be delayed, from the time of discovery, up to 24 hours or up to the limit of the specified Frequency, whichever is less. This delay period is permitted to allow performance of the Surveillance.

If the Surveillance is not performed within the delay period, the DLCO must immediately be declared not met, and the applicable Condition(s) must be entered.

When the Surveillance is performed within the delay period and the Surveillance is not met, the DLCO must immediately be declared not met, and the applicable Condition(s) must be entered.

D 3.1 LIQUID EFFLUENTS

D 3.1.1 Liquid Effluents Concentration

DLCO 3.1.1 The concentration of radioactive material in water beyond the SITE AND EXCLUSION AREA BOUNDARY (Figure D2.a-1) due to radioactive liquid effluent shall not exceed:

a. The concentration specified in 10 CFR Part 20.1302 for radionuclides other than dissolved or entrained noble gases; and

b. 2×10^{-4} µCi/ml total activity concentration for dissolved or entrained noble gases.

APPLICABILITY: At all times.

ACTIONS

CONDITION	REQUIRED ACTION	COMPLETION TIME
A. Concentration of radioactive material beyond the SITE AND EXCLUSION AREA BOUNDARY due to radioactive liquid effluent exceeds limits.	A.1 Initiate action to restore concentration to within limits.	Immediately

SURVEILLANCE REQUIREMENTS

SURVEILLANCE		FREQUENCY
DSR 3.1.1.1	Perform radioactive liquid waste sampling and activity analysis.	In accordance with Table D3.1.1-1
DSR 3.1.1.2	The analytical results shall be used with methods in the ODAM to verify that the average concentration beyond the SITE AND EXCLUSION AREA BOUNDARY does not exceed DLCO 3.1.1 when SR-89, SR-90, and Fe-55 concentrations are averaged over no more than 3 months and other radionuclide concentrations are averaged over no more than 31 days.	In accordance with ODAM Section 2.4

Table D3.1.1-1 (Page 1 of 2)
Radioactive Liquid Waste Sampling and Analysis

LIQUID RELEASE TYPE	SAMPLE TYPE	SAMPLE FREQUENCY	ANALYSIS FREQUENCY	SAMPLE ANALYSIS	SAMPLE LOWER LIMIT OF DETECTION (LLD)(h)
Batch Waste Release Tanks (c)	Grab sample	Each batch (a)	Each batch (a)	Principal Gamma Emmitters (j)(k)	5×10^{-7} µCi/ml (i)
				I-131	1×10^{-6} µCi/ml
	Grab sample	One batch/ 31 days (a)	31 days (b)	Dissolved and Entrained Gases (gamma emitters)	1×10^{-5} µCi/ml
	Proportional Composite of grab samples (f)	Each batch (a)	31 days (b)	H-3	1×10^{-5} µCi/ml
			31 days (b) (l)	Gross Alpha	1×10^{-7} µCi/ml
			92 days (b) (l)	Sr-89	5×10^{-8} µCi/ml
				Sr-90	5×10^{-8} µCi/ml
				Fe-55	1×10^{-6} µCi/ml
Plant Service Water Effluent (d)	Grab Sample	7 days	7 days (b)	Principal Gamma Emitters (j)(k)	5×10^{-7} µCi/ml (i)
Plant Continuous Discharge (e)	Proportional Composite of grab Samples (g)	24 hours	7 days (b)	Principal Gamma Emitters (j) (k)	5×10^{-7} µCi/ml (i)
				I-131	1×10^{-6} µCi/ml
	Grab Sample	31 days	31 days (b)	Dissolved and Entrained Gases (gamma emitters)	1×10^{-5} µCi/ml
	Proportional Composite of Grab Samples (g)	24 hours	31 days (b)	H-3	1×10^{-5} µCi/ml
			31 days (b) (l)	Gross Alpha	1×10^{-7} µCi/ml
			92 days (b) (l)	Sr-89	5×10^{-8} µCi/ml
				Sr-90	5×10^{-8} µCi/ml
				Fe-55	1×10^{-6} µCi/ml

(a) Complete prior to each release.

(b) Analysis may be performed after release.

(c) A batch release is the discharge of liquid wastes of a discrete volume. Prior to sampling for analyses, each batch shall be isolated and then thoroughly mixed.

(d) A grab sample of plant service water effluent shall be analyzed at least once each week in accordance with Table D3.1.1-1, Plant Service Water Effluent. In the event the radioactivity concentration in a sample exceeds 3×10^{-6} µCi/ml, or in the event the plant service water effluent monitor indicates the presence of an activity concentration greater than 3×10^{-6} µCi/ml, sampling and analysis according to Table D3.1.1-1, Plant Continuous Discharge, shall commence and shall be performed as long as the condition persists.

(e) A continuous release is the discharge of liquid wastes of a nondiscrete volume; e.g., from a volume of system that has an input flow during the continuous release.

(f) A composite sample is one in which the quantity of liquid sampled is proportional to the quantity of liquid waste discharged and in which the method of sampling employed results in a specimen which is representative of the liquids released.

(g) To be representative of the quantities and concentrations of radioactive materials in liquid effluents, daily grab samples shall be collected in proportion to the rate of flow of the effluent stream. Prior to analysis, all samples taken for the composite shall be thoroughly mixed in order for the composite sample to be representative of the effluent release.

(h) The LLD is the smallest concentration of the radioactive material in a sample that will be detected with 95% probability (5% probability of falsely concluding that a blank observation represents a "real" signal).

For a particular measurement system (which may include radiochemical separation):

$$LLD = \frac{(4.66)(S_b)}{(E)(V)(2.22)(Y)e^{-\lambda \Delta t}}$$

Where:

LLD is the "a priori" lower limit of detection as described above (as picocurie per unit mass or volume),

s_b is the standard deviation of the background counting rate or of the counting rate of a blank sample as appropriate (as counts per minute),

E is the counting efficiency (as counts per transformation),

V is the sample size (in units of mass or volume),

2.22 is the number of transformations per minute per picocurie,

Y is the fractional radiochemical yield (when applicable),

λ is the radioactive decay constant for the particular radionuclide, and

Δt is the elapsed time between midpoint of sample collection and time of counting (for plant effluents, not environmental samples).

The value of s_b used in the calculation of the LLD for a detection system shall be based on the actual observed variance of the background counting rate or of the counting rate of the blank samples (as appropriate) rather than on an unverified theoretically predicted variance. In calculating the LLD for a radionuclide determined by gamma-ray spectrometry, the background shall include the typical contributions of other radionuclides normally present in the samples. Typical values of E, V, Y and Δt shall be used in the calculation.

(i) For certain radionuclides with low gamma yield or low energies, or for certain radionuclide mixtures, it may not be possible to measure radionuclides in concentrations near the LLD. Under these circumstances, the LLD may be increased inversely proportionally to the magnitude of the gamma yield (i.e., $5 \times 10^{-7}/I$, where I is the photon abundance expressed as a decimal fraction), but in no case shall the LLD, as calculated in this manner for a specific radionuclide, be greater than 10% of the value specified in 10 CFR 20, Appendix B, Table 2, Column 2.

(j) The principal gamma emmitters for which the LLD specification will apply are exclusively the following radionuclides: Mn-54, Fe-59, Co-58, Co-60, Zn-65, Mo-99, Cs-134, Cs-137, Ce-141, and Ce-144. This list does not mean that only these nuclides are to be detected and reported. Other peaks which are measurable and identifiable, together with the above nuclides, shall also be identified and reported. Nuclides which are below the LLD for the analysis should not be reported as being present at the LLD level. When unusual circumstances result in LLD's higher than required, the reasons shall be documented in the Radioactive Effluent Release Report.

(k) If an isotopic analysis is unavailable, batch releases may be made for up to 14 days provided the gross beta/gamma concentration to the unrestricted area is $\leq 1 \times 10^{-6}$ µc/ml and the sample is analyzed when the instrumentation is once again available.

(l) Analysis to be completed within 92 days of the composite sample end date.

D 3.1 LIQUID EFFLUENTS

D 3.1.2 Liquid Waste Concentration

DLCO 3.1.2 The concentration of radioactive materials in liquid wastes from pre-release analysis shall be ≤ 0.01 μCi/ml, excluding tritium and noble gases.

APPLICABILITY: At all times.

ACTIONS

CONDITION	REQUIRED ACTION	COMPLETION TIME
A. Concentration of radioactive materials in liquid wastes from pre-release analysis > 0.01 μCi/ml, excluding tritium and noble gases.	A.1 Appropriate parts of the liquid radwaste treatment system shall be used to reduce the concentration.	Prior to liquid waste discharge
B. Required Action and associated Completion Time not met. AND Radioactive liquid waste being discharged without treatment in excess of 0.01 μCi/ml, excluding tritium and noble gases.	B.1 Prepare and submit a Special Report to the NRC pursuant to Specification D 5.4 that identifies equipment or subsystems not OPERABLE and the reason for the inoperability, action(s) taken to restore the inoperable equipment to OPERABLE status and a summary description of the action(s) taken to prevent a recurrence.	31 days following the end of the quarter in which the limit was exceeded

D 3.1 LIQUID EFFLUENTS

D 3.1.3 Liquid Effluents Dose

DLCO 3.1.3 The dose to a Member of the Public due to radioactive material in liquid effluents beyond the SITE AND EXCLUSION AREA BOUNDARY (Figure D2.a-1) shall be limited to:

a. ≤ 1.5 mrem to the total body or ≤ 5.0 mrem to any body organ during any calender quarter; and

b. ≤ 3.0 mrem to the total body or ≤ 10.0 mrem to any body organ during any calender year.

APPLICABILITY: At all times.

ACTIONS

CONDITION	REQUIRED ACTION	COMPLETION TIME
A. Calculated dose due to radioactive material in liquid effluents beyond the SITE AND EXCLUSION AREA BOUNDARY exceeds the limit.	A.1 Prepare and submit a Special Report, in lieu of any other report, pursuant to Specification D 5.4 to the NRC which identifies the cause(s) for exceeding the limit(s) and defines the corrective actions to be taken.	31 days following the end of the quarter in which the limit was exceeded

ACTIONS

CONDITION	REQUIRED ACTION	COMPLETION TIME
B. Calculated dose due to radioactive material in liquid effluents beyond the SITE AND EXCLUSION AREA BOUNDARY exceeds two times the limit.	B.1 Prepare and submit a Special Report, in lieu of any other report, pursuant to Specification D 5.4 to the NRC which: 1) defines actions to be taken to reduce releases and prevent recurrence, and 2) results of an exposure analysis including effluent pathways and direct radiation to determine whether the dose or dose commitment to a Member of the Public due to radiation and radioactive releases from Cooper Station during the calender year through the period covered by the calculation was ≤ 75 mrem to the thyroid and ≤ 25 mrem to the total body and all other body organs.	31 days

SURVEILLANCE REQUIREMENTS

SURVEILLANCE		FREQUENCY
DSR 3.1.3.1	Perform an assessment of compliance with DLCO 3.1.3.	31 days
DSR 3.1.3.2	Project a prospect of compliance with DLCO 3.1.3 for radioactive liquid releases without radwaste system in operation.	In any quarter in which Radioactive liquid releases are made and the radwaste system is not operated

D 3.1 LIQUID EFFLUENTS

D 3.1.4 Outside Temporary Storage of Radioactive Liquid

DLCO 3.1.4 Radioactive liquid contained in unprotected outdoor temporary liquid storage tanks shall conform to the requirements of Technical Specification (TS) 5.5.8.b.

APPLICABILITY: At all times.

ACTIONS

CONDITION	REQUIRED ACTION	COMPLETION TIME
A. Level of radioactivity exceeds the limits of TS 5.5.8.b.	A.1 Suspend addition of radioactive material.	Immediately
	AND	
	A.2 Begin measures to reduce content to within the limits of TS 5.5.8.b.	Immediately
	AND	
	A.3 Describe the events leading to the condition in the Radioactive Effluent Release Report.	In accordance with the Radioactive Effluent Release Report frequency

SURVEILLANCE REQUIREMENTS

SURVEILLANCE		FREQUENCY
DSR 3.1.4.1	Sample and analyze radioactive liquid located in unprotected outdoor temporary liquid storage tanks for level of radioactivity.	7 days during addition of radioactive liquid to the tanks

D 3.2 GASEOUS EFFLUENTS

D 3.2.1 Gaseous Effluents Concentration

DLCO 3.2.1 The dose rate beyond the SITE AND EXCLUSION AREA BOUNDARY (Figure D2.a-1) due to radioactive gaseous effluents shall be limited to the following:

a. For noble gases, ≤ 500 mrem per year to the total body and ≤ 3000 mrem per year to the skin; and

b. For H-3, I-131, I-133, and radioactive material in particulate form with half lives ≥ 8 days, ≤ 1500 mrem per year to any organ when;

1. The dose rate due to H-3, Sr-89, Sr-90, and alpha emitting radionuclides is averaged over ≤ 3 months and;

2. The dose rate due to other radionuclides is averaged over ≤ 31 days.

APPLICABILITY: At all times.

ACTIONS

CONDITION	REQUIRED ACTION	COMPLETION TIME
A. Dose rates beyond the SITE AND EXCLUSION AREA BOUNDARY due to radioactive gaseous effluents exceeds limits.	A.1 Decrease release rate to comply with the limits.	Immediately

SURVEILLANCE REQUIREMENTS

SURVEILLANCE		FREQUENCY
DSR 3.2.1.1	Perform an assessment of compliance for DLCO 3.2.1(b).	31 days

D 3.2 GASEOUS EFFLUENTS

D 3.2.2 Noble Gases Dose

DLCO 3.2.2 The air dose beyond the SITE AND EXCLUSION AREA BOUNDARY (Figure D2.a-1) due to noble gases released in gaseous effluents shall be limited to the following:

a. For gamma radiation, ≤ 5 mrad during any calender quarter and ≤ 10 mrad during any calender year; and

b. For beta radiation, ≤ 10 mrad during any calender quarter and ≤ 20 mrad during any calender year.

APPLICABILITY: At all times.

ACTIONS

CONDITION	REQUIRED ACTION	COMPLETION TIME
A. Calculated air dose due to radioactive noble gases beyond the SITE AND EXCLUSION AREA BOUNDARY exceeds the limit.	A.1 Prepare and submit a Special Report pursuant to Specification D 5.4 to the NRC in lieu of any other report which identifies the cause(s) and defines the corrective actions taken.	31 days following the end of the quarter in which the limit was exceeded

ACTIONS (continued)

CONDITION	REQUIRED ACTION	COMPLETION TIME
B. Calculated air dose due to radioactive noble gases beyond the SITE AND EXCLUSION AREA BOUNDARY exceeds two times the limit.	B.1 Prepare and submit a Special Report, in lieu of any other report, pursuant to Specification D 5.4 to the NRC which: 1) defines actions to be taken to reduce releases and prevent recurrence, and 2) results of an exposure analysis including effluent pathways and direct radiation to determine whether the dose or dose commitment to a Member of the Public due to radiation and radioactive releases from Cooper Station during the calender year through the period covered by the calculation was ≤ 75 mrem to the thyroid and ≤ 25 mrem to the total body or any other body organ.	31 days

SURVEILLANCE REQUIREMENTS

SURVEILLANCE		FREQUENCY
DSR 3.2.2.1	Perform an assessment of compliance for DLCO 3.2.2.	31 days

D 3.2 GASEOUS EFFLUENTS

D 3.2.3 Iodine and Particulates

DLCO 3.2.3 The dose to a Member of the Public due to I-131, I-133 and radioactive material in particulate form having a half-life > 8 days in gaseous effluents beyond the SITE AND EXCLUSION AREA BOUNDARY (Figure D2.a-1) shall be limited to:

a. ≤ 7.5 mrem to any organ during any calender quarter; and

b. ≤ 15 mrem to any organ during any calender year.

APPLICABILITY: At all times.

ACTIONS

CONDITION	REQUIRED ACTION	COMPLETION TIME
A. Calculated dose due to I-131, I-133 and radioactive material in particulate form having a half-life > 8 days beyond the SITE AND EXCLUSION AREA BOUNDARY exceeds the limit.	A.1 Prepare and submit a Special Report, in lieu of any other report, pursuant to Specification D 5.4 to the NRC which identifies the cause(s) for exceeding the limit(s) and describes the corrective action taken.	31 days following the end of the quarter in which the limit was exceeded.

ACTIONS

CONDITION	REQUIRED ACTION	COMPLETION TIME
B. Calculated dose due to I-131, I-133 and radioactive material in particulate form having a half-life > 8 days beyond the SITE AND EXCLUSION AREA BOUNDARY exceeds two times the limit.	B.1 Prepare and submit a Special Report, in lieu of any other report, pursuant to Specification D 5.4 to the NRC which: 1) defines actions to be taken to reduce releases and prevent recurrence, and 2) results of an exposure analysis including effluent pathways and direct radiation to determine whether the dose or dose commitment to a Member of the Public due to radiation and radioactive releases from Cooper Station was ≤ 75 mrem to the thyroid and ≤ 25 mrem to the total body or any other body organ.	31 days

SURVEILLANCE REQUIREMENTS

SURVEILLANCE		FREQUENCY
DSR 3.2.3.1	Perform radioactive gaseous waste sampling and activity analysis on effluents other than noble gases.	In accordance with Table D3.2.3-1
DSR 3.2.3.2	Perform a dose assessment to determine compliance with DLCO 3.2.3.	31 days

Table D3.2.3-1 (Page 1 of 3)
Radioactive Gaseous Waste Sampling and Analysis

GASEOUS RELEASE TYPE	SAMPLE TYPE	SAMPLE FREQUENCY	ANALYSIS FREQUENCY	SAMPLE ANALYSIS	SAMPLE LOWER LIMIT OF DETECTION(LLD) (h)
1. Elevated Release Point (ERP)	Grab Sample	31 days (c)	31 days (c)	Principal Gamma Emitters (f)	1×10^{-4} µCi/ml (i)
	Grab Sample	92 days (a)	92 days	H-3	1×10^{-6} µCi/ml
	Charcoal Sample	Continuous (b)	7 days (d)	I-131	1×10^{-12} µCi/ml
				I-133	1×10^{-10} µCi/ml
	Particulate Sample	Continuous (b)	7 days (d)	Principal Gamma Emitters (f) (I-131, Others)	1×10^{-11} µCi/ml (i)
	Composite Particulate Sample (e)	Continuous (b)	92 days (j)	Sr-89	1×10^{-11} µCi/ml
				Sr-90	1×10^{-11} µCi/ml
				Gross Alpha	1×10^{-11} µCi/ml
	Noble Gas Monitor	Continuous (b)	Continuous	Gross Noble Gases (g) (Beta, Gamma)	1×10^{-6} µCi/ml
2. Reactor Building Vent	Grab Sample	31 days (c)	31 days (c)	Principal Gamma Emitters (f)	1×10^{-4} µCi/ml (i)
	Grab Sample	92 days (a)	92 days	H-3	1×10^{-6} µCi/ml
	Charcoal Sample	Continuous (b)	7 days (d)	I-131	1×10^{-12} µCi/ml
				I-133	1×10^{-10} µCi/ml
	Particulate Sample	Continuous (b)	7 days (d)	Principal Gamma Emitters (f) (I-131, Others)	1×10^{-11} µCi/ml (i)
	Composite Particulate Sample (e)	Continuous (b)	92 days (j)	Sr-89	1×10^{-11} µCi/ml
				Sr-90	1×10^{-11} µCi/ml
				Gross Alpha	1×10^{-11} µCi/ml
	Noble Gas Monitor	Continuous (b)	Continuous	Gross Noble Gases (g) (Beta, Gamma)	1×10^{-6} µCi/ml
3. Augmented Radwaste Building Vent	Grab Sample	31 days (c)	31 days (c)	Principal Gamma Emitters (f)	1×10^{-4} µCi/ml (i)
	Grab Sample	92 days (a)	92 days	H-3	1×10^{-6} µCi/ml
	Charcoal Sample	Continuous (b)	7 days (d)	I-131	1×10^{-12} µCi/ml

(continued)

Table D3.2.3-1 (Page 2 of 3)
Radioactive Gaseous Waste Sampling and Analysis

GASEOUS RELEASE TYPE	SAMPLE TYPE	SAMPLE FREQUENCY	ANALYSIS FREQUENCY	SAMPLE ANALYSIS	SAMPLE LOWER LIMIT OF DETECTION (LLD)(h)
3. (continued)	Charcoal Sample	Continuous (b)	7 days (d)	I-133	1×10^{-10} µCi/ml
	Particulate Sample	Continuous (b)	7 days (d)	Principal Gamma Emitters (f) (I-131, Others)	1×10^{-11} µCi/ml (i)
	Composite Particulate Sample (e)	Continuous (b)	92 days (j)	Sr-89	1×10^{-11} µCi/ml
				Sr-90	1×10^{-11} µCi/ml
				Gross Alpha	1×10^{-11} µCi/ml
	Noble Gas Monitor	Continuous (b)	Continuous	Gross Noble Gases (g) (Beta, Gamma)	1×10^{-6} µCi/ml
4. Turbine Building Vent (Gaseous)	Grab Sample	31 days (c)	31 days (c)	Principal Gamma Emitters (f)	1×10^{-4} µCi/ml (i)
	Grab Sample	92 days (a)	92 days	H-3	1×10^{-6} µCi/ml
	Charcoal Sample	Continuous (b)	7 days (d)	I-131	1×10^{-12} µCi/ml
				I-133	1×10^{-10} µCi/ml
	Particulate Sample	Continuous (b)	7 days (d)	Principal Gamma Emitters (f) (I-131, Others)	1×10^{-11} µCi/ml (i)
	Composite Particulate Sample (e)	Continuous (b)	92 days (j)	Sr-89	1×10^{-11} µCi/ml
				Sr-90	1×10^{-11} µCi/ml
				Gross Alpha	1×10^{-11} µCi/ml
	Noble Gas Monitor	Continuous (b)	Continuous	Gross Noble Gases (g) (Beta, Gamma)	1×10^{-6} µCi/ml
5. Multi Purpose Facility (MPF) Building Vent (Gaseous)	Charcoal Sample	Continuous (b)	7 days (d)	I-131	1×10^{-12} µCi/ml
				I-133	1×10^{-10} µCi/ml
	Particulate Sample	Continuous (b)	7 days (d)	Principal Gamma Emitters (f) (I-131, Others)	1×10^{-11} µCi/ml (i)
	Composite Particulate Sample (e)	Continuous (b)	92 days (j)	Sr-89	1×10^{-11} µCi/ml
				Sr-90	1×10^{-11} µCi/ml
				Gross Alpha	1×10^{-11} µCi/ml

(a) A H-3 grab sample will also be taken when the reactor vessel head is removed. This sample will be taken at the ERP or Reactor Building Vent whichever will be representative dependent upon the head removal vacuum procedure.

(b) The ratio of the sample flow rate to the sampled stream flow rate shall be known for the time period covered by each dose or dose rate calculation made in accordance with Specifications D 3.2.1, D 3.2.2 and D 3.2.3.

(continued)

Table D3.2.3-1 (Page 3 of 3)
Radioactive Gaseous Waste Sampling and Analysis

(c) Analyses shall also be performed following an increase as indicated by the gaseous release monitor of greater than 50% in the steady state release, after factoring out increases due to power changes or other operational occurrences, which could alter the mixture of radionuclides.

(d) Analysis shall also be performed following an increase as indicated by the gaseous release monitor of greater than 50% in the steady state release, after factoring out increases due to power changes or other operational occurrences, which could alter the mixture of radionuclides. When samples collected for 24 hours or less are analyzed, the corresponding LLD's may be increased by a factor of 10.

(e) A quarterly composite particulate sample shall include a portion of each week's particulate samples collected during the quarter.

(f) The principal gamma emitters for which the LLD specification will apply are exclusively the following radionuclides: Kr-87, Kr-88, Xe-133, Xe-133m, Xe-135, and Xe-138 for the gaseous emissions and Mn-54, Fe-59, Co-58, Co-60, Zn-65, Mo-99, Cs-134, Cs-137, Ce-141, and Ce-144 for particulate emissions. This list does not mean that only these nuclides are to be detected and reported. Other peaks which are measurable and identifiable, together with the above nuclides, shall also be identified and reported. Nuclides which are below the LLD for the analyses should not be reported as being present at the LLD level for that nuclide. When unusual circumstances cause LLD's higher than required for more than 31 days, the reasons shall be documented in the Radioactive Effluent Release Report.

(g) The noble gas continuous monitor shall be calibrated using laboratory analysis of the grab samples from Table D3.2.3-1 or using reference sources.

(h) The LLD is the smallest concentration of radioactive material in sample that will be detected with 95% probability (5% probability of falsely concluding that a blank observation represents a "real" signal.)

For a particular measurement system (which may include radiochemical separation):

$$LLD = \frac{(4.66)(s_b)}{(E)(V)(2.22)(Y)e^{-\lambda\Delta t}}$$

Where:

LLD is the "a priori" lower limit of detection as described above (as picocurie per unit mass or volume),

s_b is the standard deviation of the background counting rate or of the counting rate of a blank sample as appropriate (as counts per minute),

E is the counting efficiency (as counts per transformation),

V is the sample size (in units of mass or volume),

2.22 is the number of transformations per minute per picocurie,

Y is the fractional radiochemical yield (when applicable),

λ is the radioactive decay constant for the particular radionuclide, and

Δt is the elapsed time between midpoint of sample collection and time of counting (for plant effluents, not environmental samples).

The value of s_b used in the calculation of the LLD for a detection system shall be based on the actual observed variance of the background counting rate or of the counting rate of the blank samples (as appropriate) rather than on an unverified theoretically predicted variance. In calculating the LLD for a radionuclide determined by gamma-ray spectrometry, the background shall include the typical contributions of other radionuclides normally present in the samples. Typical values of E, V, Y and Δt shall be used in the calculation.

(i) For certain radionuclides with low gamma yield or low energies, or for certain radionuclide mixtures, it may not be possible to measure radionuclides in concentrations near the LLD. Under these circumstances, the LLD may be increased inversely proportional to the magnitude of the gamma yield (i.e., $1 \times 10^{-4}/I$, where I is the photon abundance expressed as a decimal fraction), but in no case shall the LLD, as calculated in this manner for a specific radionuclide, be greater than 10% of the values specified in 10 CFR 20, Appendix B, Table 2, Column 1.

(j) Analysis to be completed within 92 days of the composite sample end date.

D 3.2 GASEOUS EFFLUENTS

D 3.2.4 Offgas Treatment System

DLCO 3.2.4 Gaseous releases discharged through the Offgas Treatment System shall have at least one train of charcoal adsorbers in service.

APPLICABILITY: Main condenser air ejector in service, except during startup or shutdown with reactor < 10% rated power or when system cannot function due to low offgas flow.

ACTIONS

CONDITION	REQUIRED ACTION	COMPLETION TIME
A. Gaseous releases discharged without either train of charcoal adsorbers in service.	A.1 Restore release of gaseous discharge via charcoal adsorbers.	7 days
B. Required Action and associated Completion Time not met.	B.1 Prepare and submit a Special Report pursuant to Specification D 5.4 to the NRC which identifies the inoperable equipment and describes the corrective action taken.	31 days following the end of the quarter in which the release occurred

SURVEILLANCE REQUIREMENTS

SURVEILLANCE		FREQUENCY
DSR 3.2.4.1	Verify operation of the Offgas Treatment System charcoal adsorbers by using the gaseous effluent monitoring program in D 3.3.2, Gaseous Effluent Monitoring.	In accordance with the DSR frequencies of D 3.3.2.
DSR 3.2.4.2	Project the prospect of compliance with DLCO 3.2.5, Condition B.	Every 31 days when radioactive material in gaseous effluent is released without treatment.

D 3.2 GASEOUS EFFLUENTS

D 3.2.5 Exhaust Ventilation Treatment Systems (EVTS)

DLCO 3.2.5 The Exhaust Ventilation Treatment Systems (EVTS) shall be operated to treat radioactive materials in effluent air.

APPLICABILITY: When radioactive material in gaseous effluent is being released via the associated pathway.

ACTIONS

CONDITION	REQUIRED ACTION	COMPLETION TIME
A. Radioactive material in gaseous effluent released without treatment.	A.1 Ensure DSR 3.2.5.1 is met.	31 days
B. Air is discharged without treatment for > 31 days. AND The projected dose to a Member of the Public due to activity in air effluent via that pathway exceeds 0.3 mrem to any body organ.	B.1 Prepare and submit a Special Report pursuant to Specification D 5.4 to the NRC which identifies the inoperable equipment and describes the corrective action taken.	31 days following the end of the quarter in which the release occurred

SURVEILLANCE REQUIREMENTS

SURVEILLANCE		FREQUENCY
DSR 3.2.5.1	Project the prospect of compliance with DLCO 3.2.5.	Every 31 days when radioactive material in gaseous effluent is released without treatment.

D 3.2 GASEOUS EFFLUENTS

D 3.2.6 Hydrogen Concentration

DLCO 3.2.6 The concentration of hydrogen in the augmented offgas treatment system downstream of the recombiners shall be limited to ≤ 2% by volume.

APPLICABILITY: During augmented offgas treatment system operation.

ACTIONS

CONDITION	REQUIRED ACTION	COMPLETION TIME
A. Concentration of hydrogen exceeds limits.	A.1 Restore concentration to within limits.	48 hours

SURVEILLANCE REQUIREMENTS

SURVEILLANCE		FREQUENCY
DSR 3.2.6.1	Verify Hydrogen concentration in the augmented offgas treatment system downstream of the recombiners is within limits.	24 hours

D 3.2 GASEOUS RELEASES

D 3.2.7 Primary Containment Venting and Purging

DLCO 3.2.7 Venting and purging of the primary containment shall be through the Standby Gas Treatment System.

----------NOTES----------

1. This specification does not apply to Normal Ventilation.

2. This specification does not apply during startup while performing primary containment inerting in accordance with Technical Specification 3.6.3.1, Primary Containment Oxygen Concentration, following a shutdown of > 24 hours or while performing primary containment de-inerting providing one channel of the drywell atmospheric particulate and gaseous monitoring system is OPERABLE and not in the alarm state.

APPLICABILITY: At all times.

ACTIONS

CONDITION	REQUIRED ACTION	COMPLETION TIME
A. Requirement not met.	A.1 Suspend all venting and purging of the primary containment.	Immediately

SURVEILLANCE REQUIREMENTS

SURVEILLANCE		FREQUENCY
DSR 3.2.7.1	The primary containment shall be determined to be aligned for venting or purging through the Standby Gas Treatment System.	Once within 4 hours prior to venting or purging of the primary containment AND 12 hours thereafter during venting or purging of the primary containment.

D 3.3 INSTRUMENTATION

D 3.3.1 Liquid Effluent Monitoring

DLCO 3.3.1 The liquid effluent radiation monitoring instrumentation channels shown on Table D3.3.1-1 shall be OPERABLE with:

a. The minimum OPERABLE channel(s)in service.

b. The alarm and trip setpoints set to ensure that the limits of DLCO 3.1.1 are not exceeded.

APPLICABILITY: According to Table D3.3.1-1.

ACTIONS

----------NOTE----------
Separate condition entry is allowed for each channel.

CONDITION	REQUIRED ACTION	COMPLETION TIME
A. Liquid effluent radiation monitoring instrumentation channel alarm and trip setpoint less conservative than required.	A.1 Suspend liquid effluent radiation release monitored by the inoperable channel. OR A.2 Declare channel inoperable.	Immediately Immediately

ACTIONS

CONDITION	REQUIRED ACTION	COMPLETION TIME
B. One or more channels inoperable.	B.1 Enter the Condition referenced in Table D3.3.1-1 for the channel.	Immediately
	AND	
	B.2.1 Restore inoperable channel(s) to OPERABLE status.	31 days
	OR	
	B.2.2 In lieu of any other report, explain in the Radioactive Effluent Release Report why the instrument was not repaired in a timely manner.	In accordance with the Radioactive Effluent Release Report frequency.

ACTIONS

CONDITION	REQUIRED ACTION	COMPLETION TIME
C. As required by Required Action B.1 and referenced in Table D3.3.1-1.	C.1 Analyze a minimum of 2 independent samples in accordance with Table D3.1.1-1. AND C.2 ----------NOTE---------- Determination Action and Verification Action will be performed by two separate technically qualified members of the Facility Staff. ---------- Determine and independently verify the release rate calculations and discharge valving.	Prior to initiating a release Prior to initiating a release
D. As required by Required Action B.1 and referenced in Table D3.3.1-1.	D.1 Collect and analyze a grab sample for gross beta radioactivity or gross gamma radioactivity (as applicable) at a lower limit of detection $\leq 10^{-6}$ µCi/ml.	24 hours AND Once per 24 hours thereafter
E. As required by Required Action B.1 and referenced in Table D3.3.1-1.	E.1 Estimate flow rate during actual release.	4 hours AND Once per 4 hours thereafter

ACTIONS

CONDITION	REQUIRED ACTION	COMPLETION TIME
F. Required Action and associated Completion Time for Condition C or E not met.	F.1 Suspend liquid effluent releases monitored by the inoperable channel(s).	Immediately

SURVEILLANCE REQUIREMENTS

SURVEILLANCE		FREQUENCY
DSR 3.3.1.1	Perform CHANNEL CHECK.	24 hours
DSR 3.3.1.2	Perform CHANNEL CHECK for each channel to demonstrate OPERABILITY by verifying indication of flow during periods of release.	24 hours on any day on which continuous, periodic, or batch releases are made
DSR 3.3.1.3	Perform SOURCE CHECK.	Completed prior to each release
DSR 3.3.1.4	Perform SOURCE CHECK.	31 days
DSR 3.3.1.5	Perform CHANNEL CALIBRATION	18 months
DSR 3.3.1.6	Perform CHANNEL FUNCTIONAL TEST. The CHANNEL FUNCTIONAL TEST shall also demonstrate automatic isolation of the pathway for instrument indication levels measured above the alarm/trip setpoint and circuit failure; and control room alarm annunciation for instrument indication levels measured above the alarm/trip setpoint, circuit failure and instrument indicating downscale failure.	92 days

SURVEILLANCE REQUIREMENTS

SURVEILLANCE		FREQUENCY
DSR 3.3.1.7	Perform CHANNEL FUNCTIONAL TEST. The CHANNEL FUNCTIONAL TEST shall also demonstrate control room alarm annunciation for instrument indication levels measured above the alarm/trip setpoint, circuit failure, instrument indicating downscale failure, and instrument controls not set in operate mode.	92 days
DSR 3.3.1.8	Perform CHANNEL FUNCTIONAL TEST.	184 days
DSR 3.3.1.9	Perform LOGIC SYSTEM FUNCTIONAL TEST	184 days

Table D3.3.1-1
Radioactive Liquid Effluent Monitoring Instrumentation

INSTRUMENT	APPLICABILITY OR OTHER SPECIAL CONDITIONS	MINIMUM CHANNELS OPERABLE	CONDITION REFERENCED FROM ACTION B.1	SURVEILLANCE REQUIREMENTS
1. Gross Beta or Gamma Radioactivity Monitors Providing Automatic Isolation				
a. Liquid Radwaste Effluent Line	(a)	1 (b)	C	DSR 3.3.1.1 DSR 3.3.1.3 DSR 3.3.1.5 DSR 3.3.1.6 DSR 3.3.1.9
2. Gross Beta or Gamma Radioactivity Monitors Providing Alarm but not Providing Automatic Isolation				
a. Service Water System Effluent Line	(a)	1	D	DSR 3.3.1.1 DSR 3.3.1.4 DSR 3.3.1.5 DSR 3.3.1.7
3. Flow Rate Measurement Devices				
a. Liquid Radwaste Effluent Line	(a)	1	E	DSR 3.3.1.2 DSR 3.3.1.5 DSR 3.3.1.8

(a) During releases via this pathway.

(b) Set to alarm and automatically close the waste discharge valve prior to exceeding the limits of DLCO 3.1.1.

D 3.3 INSTRUMENTATION

D 3.3.2 Gaseous Effluent Monitoring

DLCO 3.3.2 The gaseous effluent radiation monitoring instrumentation channel(s) shown in Table D3.3.2-1 shall be OPERABLE with:

a. The minimum OPERABLE channel(s) in service.

b. The alarm and trip setpoints set to ensure that the limits of DLCO 3.2.1 are not exceeded.

APPLICABILITY: According to Table D3.3.2-1.

SJAE's
AOG
Rx Bldg Vent
ERP
RWS Bldg Vent
TB Vent
MPF Vent

ACTIONS

NOTE

Separate Condition entry is allowed for each channel.

CONDITION	REQUIRED ACTION	COMPLETION TIME
A. Gaseous effluent radiation monitoring instrumentation channel alarm and trip setpoint less conservative than required.	A.1 Suspend gaseous effluent radiation release monitored by inoperable channel.	Immediately
	OR	
	A.2 Declare channel inoperable.	Immediately

ACTIONS

CONDITION	REQUIRED ACTION	COMPLETION TIME
B. One or more channels inoperable.	B.1 Enter the Condition referenced in Table D3.3.2-1 for the channel.	Immediately
	AND	
	B.2.1 Restore inoperable channel(s) to OPERABLE status.	31 days
	OR	
	B.2.2 In lieu of any other report, explain in the Radioactive Effluent Release Report why the instrument was not repaired in a timely manner.	In accordance with the Radioactive Effluent Release Report frequency
C. As required by Required Action B.1 and referenced in Table D3.3.2-1.	C.1 Ensure the offgas delay system is not bypassed.	Immediately
	AND	
SJAE Noble Gas Activity	C.2 Ensure the Elevated Release Point Monitoring noble gas activity monitor is OPERABLE.	Immediately See NUREG 1302
	AND	
	C.3 Restore inoperable channels to OPERABLE status.	72 hours
D. Required Action and associated Completion Time for Condition C not met.	D.1 ~~Be in MODE 2.~~ Delete Tech Spec LCO 3.7.5 not met.	12 hours

ACTIONS

CONDITION	REQUIRED ACTION	COMPLETION TIME
E. As required by Required Action B.1 and referenced in Table D3.3.2-1.	E.1 Estimate flowrate.	24 hours AND Once per 24 hours thereafter
F. As required by Required Action B.1 and referenced in Table D3.3.2-1.	F.1 Take grab samples. AND F.2 Analyze for gross activity.	24 hours AND Once per 24 hours thereafter 24 hours from time of sampling completion

ACTIONS

CONDITION	REQUIRED ACTION	COMPLETION TIME
G. As required by Required Action B.1 and referenced in Table D3.3.2-1.	G.1.1 Verify one Function 2.a monitor OPERABLE. AND	Immediately
	G.1.2 Verify recombiner exhaust temperature change less than 10°F over a 24 hour period.	Immediately AND Once per 24 hours thereafter.
	OR	
	G.2.1 Verify one Function 2.a monitor OPERABLE. AND	Immediately
	G.2.2 Collect gas sample.	24 hours AND Once per 24 hours thereafter
	AND	
	G.2.3 Analyze gas sample and ensure within the limit of DLCO 3.2.6.	4 hours from time of sampling completion
	OR	
	G.3.1 Verify recombiner exhaust temperature change less than 10°F over a 24 hour period. AND	Immediately AND Once per 24 hours thereafter.
	G.3.2 Collect gas sample.	24 hours AND Once per 24 hours thereafter.

ACTIONS

CONDITION	REQUIRED ACTION		COMPLETION TIME
		AND	
	G.3.3	Analyze gas sample and ensure within the limit of DLCO 3.2.6.	4 hours from time of sampling completion.
H. Required Action and associated Completion Time for Condition G not met.	H.1	Discontinue operation of the augmented offgas treatment system.	Immediately
I. As required by Required Action B.1 and referenced in Table D3.3.2-1.	I.1	-------NOTE------- When the primary monitoring system is inoperable and the backup system is in service, sampling may be discontinued for up to 30 minutes only for changing particulate filters and iodine cartridges. ---------- Continuously collect samples with auxiliary sampling equipment as required in Table D3.2.3-1.	4 Hours
	OR		
	I.2.1	If auxiliary sampling equipment cannot be established within the specified completion time, enter the problem into the Corrective Action Program to evaluate particulate and iodine effluent releases.	Immediately
		AND	
	I.2.2	Report this event in the Radioactive Effluent Release Report.	In accordance with the Radioactive Effluent Release Report Frequency

ACTIONS

CONDITION	REQUIRED ACTION	COMPLETION TIME
J. Required Action and associated Completion Time for Condition E or F not met.	J.1 Discontinue effluent releases via this pathway.	Immediately
K. Function 1.a trip capability not maintained. SJAE Noble Gas Activity AND Radiation level exceeds 1.0 ci/sec (prior to 30 min. delay line) for > 15 consecutive minutes.	K.1 Close the offgas isolation valve. AND K.2 Initiate reactor shutdown. AND K.3 Be in MODE 4.	Immediately Immediately 24 hours

Deleted 15 LCO 3.7.5 not met.

NUREG-1302

SURVEILLANCE REQUIREMENTS

---------- NOTES ----------

1. Refer to Table D3.3.2-1 to determine which DSRs apply for each instrument.

2. When a channel is placed in an inoperable status solely for performance of required Surveillances, entry into associated Conditions and Required Actions may be delayed for up to 6 hours provided the associated Function is maintained.

SURVEILLANCE		FREQUENCY
DSR 3.3.2.1	Perform CHANNEL CHECK.	24 hours
DSR 3.3.2.2	Perform CHANNEL CHECK.	7 days
DSR 3.3.2.3	Perform SOURCE CHECK.	31 days
DSR 3.3.2.4	Perform CHANNEL FUNCTIONAL TEST.	31 days
DSR 3.3.2.5	Perform SOURCE CHECK.	92 days
DSR 3.3.2.6	Perform CHANNEL CALIBRATION. The CHANNEL CALIBRATION shall include the use of a standard gas sample containing a percentage of hydrogen to verify accuracy of the monitoring channel in its operating range.	92 days
DSR 3.3.2.7	Perform CHANNEL FUNCTIONAL TEST.	92 days
DSR 3.3.2.8	Perform CHANNEL FUNCTIONAL TEST. The CHANNEL FUNCTIONAL TEST shall also demonstrate that control room alarm annunciation occurs if; the instrument indicates measured levels above the alarm/trip setpoint, circuit failure, instrument indicates a downscale failure, or instrument controls not set in operate mode.	92 days

SURVEILLANCE REQUIREMENTS

SURVEILLANCE		FREQUENCY
DSR 3.3.2.9	Perform CHANNEL FUNCTIONAL TEST. The CHANNEL FUNCTIONAL TEST shall also demonstrate that control room alarm annunciation occurs if; the instrument indicates measured levels above the alarm/trip setpoint or circuit failure.	92 days
DSR 3.3.2.10	Perform CHANNEL CALIBRATION. For Function 1.a, the time delay setting for closure of the steam jet air ejector isolation valves shall be ≤ 15 minutes and trip settings shall correspond to Technical Specification 3.7.5.	18 months
DSR 3.3.2.11	Perform CHANNEL FUNCTIONAL TEST. The CHANNEL FUNCTIONAL TEST shall also demonstrate that automatic isolation of this pathway and control room alarm annunciation occurs if; the instrument indicates measured levels above the alarm/trip setpoint, circuit failure, instrument indicates a downscale failure, or instrument controls not set in operate mode.	18 months
DSR 3.3.2.12	Perform LOGIC SYSTEM FUNCTIONAL TEST.	18 months

Table D3.3.2-1 (Page 1 of 3)
Radioactive Gaseous Effluent Monitoring Instrumentation

INSTRUMENT	APPLICABILITY OR OTHER SPECIAL CONDITIONS	MINIMUM CHANNELS OPERABLE	CONDITION REFERENCED FROM ACTION B.1	SURVEILLANCE REQUIREMENTS
1. Steam Jet Air Ejector				
a. Noble Gas Activity Monitor	(a)	1(e)	C	DSR 3.3.2.1 DSR 3.3.2.3 DSR 3.3.2.8 DSR 3.3.2.10 DSR 3.3.2.11 DSR 3.3.2.12
b. Effluent System Flow Rate Measuring Device	(b)	1	E	DSR 3.3.2.1 DSR 3.3.2.7 DSR 3.3.2.10
2. Augmented Offgas Treatment System Explosive Gas Monitoring System				
a. Hydrogen Monitor (2% monitor)	(c)	2	G	DSR 3.3.2.1 DSR 3.3.2.4 DSR 3.3.2.6
3. Reactor Building Ventilation Monitoring System				
a. Noble Gas Activity Monitor	(b) (f)	1	F	DSR 3.3.2.1 DSR 3.3.2.3 DSR 3.3.2.9 DSR 3.3.2.10
b. Iodine Sampler Cartridge	(b) (f)	1	I	DSR 3.3.2.2
c. Particulate Sampler Filter	(b) (f)	1	I	DSR 3.3.2.2
d. Effluent System Flow Rate Measuring Device	(b)	1	E	DSR 3.3.2.1 DSR 3.3.2.7 DSR 3.3.2.10
e. Sampler Flow Rate Measuring Device	(b)	1	E	DSR 3.3.2.1 DSR 3.3.2.7 DSR 3.3.2.10
f. Isolation Monitor	(d)	(d)	(d)	DSR 3.3.2.5 DSR 3.3.2.11

(continued)

(a) During operation of the steam jet air ejector

(b) During releases via this pathway

(c) During augmented offgas treatment system operation

(d) See Technical Specification 3.3.6.2

(e) Second channel must either be OPERABLE or be in the tripped condition.

(f) A channel may be removed from service for up to 30 minutes for changing particulate filters or iodine cartridges or for low flow alarm check without entering Conditions or Required Actions.

Table D3.3.2-1 (Page 2 of 3)
Radioactive Gaseous Effluent Monitoring Instrumentation

INSTRUMENT	APPLICABILITY OR OTHER SPECIAL CONDITION	MINIMUM CHANNELS OPERABLE	CONDITION REFERENCED FROM ACTION B.1	SURVEILLANCE REQUIREMENTS
4. Elevated Release Point Monitoring System				
a. Noble Gas Activity Monitor	(b) (f)	1	F	DSR 3.3.2.1 DSR 3.3.2.3 DSR 3.3.2.9 DSR 3.3.2.10
b. Iodine Sampler Cartridge	(b) (f)	1	I	DSR 3.3.2.2
c. Particulate Sampler Filter	(b) (f)	1	I	DSR 3.3.2.2
d. Effluent System Flow Rate Measuring Device	(b)	1	E	DSR 3.3.2.1 DSR 3.3.2.7 DSR 3.3.2.10
e. Sampler Flow Rate Measuring Device	(b)	1	E	DSR 3.3.2.1 DSR 3.3.2.7 DSR 3.3.2.10
5. Radwaste Building Ventilation Monitoring System				
a. Noble Gas Activity Monitor	(b) (f)	1	F	DSR 3.3.2.1 DSR 3.3.2.3 DSR 3.3.2.9 DSR 3.3.2.10
b. Iodine Sampler Cartridge	(b) (f)	1	I	DSR 3.3.2.2
c. Particulate Sampler Filter	(b) (f)	1	I	DSR 3.3.2.2
d. Effluent System Flow Rate Measuring Device	(b)	1	E	DSR 3.3.2.1 DSR 3.3.2.7 DSR 3.3.2.10
e. Sampler Flow Rate Measuring Device	(b)	1	E	DSR 3.3.2.1 DSR 3.3.2.7 DSR 3.3.2.10
6. Turbine Building Ventilation Monitoring System				
a. Noble Gas Activity Monitor	(b) (f)	1	F	DSR 3.3.2.1 DSR 3.3.2.3 DSR 3.3.2.9 DSR 3.3.2.10
b. Iodine Sampler Cartridge	(b) (f)	1	I	DSR 3.3.2.2

(continued)

(b) During releases via this pathway

(f) A channel may be removed from service for up to 30 minutes for changing particulate filters or iodine cartridges or for low flow alarm check without entering Conditions or Required Actions.

Table D3.3.2-1 (Page 3 of 3)
Radioactive Gaseous Effluent Monitoring Instrumentation

INSTRUMENT	APPLICABILITY OR OTHER SPECIAL CONDITION	MINIMUM CHANNELS OPERABLE	CONDITION REFERENCED FROM ACTION B.1	SURVEILLANCE REQUIREMENTS
6. (continued)				
c. Particulate Sampler Filter	(b) (f)	1	I	DSR 3.3.2.2
d. Effluent System Flow Rate Measuring Device	(b)	1	E	DSR 3.3.2.1 DSR 3.3.2.7 DSR 3.3.2.10
e. Sampler Flow Rate Measuring Device	(b)	1	E	DSR 3.3.2.1 DSR 3.3.2.7 DSR 3.3.2.10
7. Multi Purpose Facility (MPF) Building Ventilation Monitoring System				
a. Iodine Sampler Cartridge	(b) (f)	1	I	DSR 3.3.2.2
b. Particulate Sampler Filter	(b) (f)	1	I	DSR 3.3.2.2
c. Effluent System Flow Rate Measuring Device	(b)	1	E	DSR 3.3.2.1 DSR 3.3.2.7 DSR 3.3.2.10
d. Sampler Flow Rate Measuring Device	(b)	1	E	DSR 3.3.2.1 DSR 3.3.2.7 DSR 3.3.2.10

(b) During releases via this pathway

(f) A channel may be removed from service for up to 30 minutes for changing particulate filters or iodine cartridges or for low flow alarm check without entering Conditions or Required Actions.

D 3.4 LIQUID/GASEOUS DOSE

D 3.4.1 Liquid/Gaseous Effluents Dose

DLCO 3.4.1 The dose or dose commitment to an actual Member of the Public due to radiation and radioactive releases from Cooper Station shall be limited to ≤ 75 mrem to the thyroid and ≤ 25 mrem to the total body or any other body organ during a calender year.

APPLICABILITY: At all times.

ACTIONS

CONDITION	REQUIRED ACTION	COMPLETION TIME
A. Estimated dose or dose commitment due to radiation and radioactive releases exceeds limits.	A.1 Verify the condition resulting in doses exceeding these limits is corrected.	Immediately
B. Required Action and associated Completion Time not met.	B.1 ----------NOTE---------- This is the Special Report required by D 3.1.2, D 3.1.3, or D 3.2.3 supplemented with the following. ----------	
	Submit a Special Report pursuant to Specification D 5.4, including information specified in 40 CFR Part 190.11(b). This submission shall be deemed a timely request for variance in accord with provisions of 40 CFR Part 190. The variance is granted until NRC staff action on the item is complete.	31 days

SURVEILLANCE REQUIREMENTS

SURVEILLANCE		FREQUENCY
DSR 3.4.1.1	Perform a cumulative dose calculation due to radioactive material in gaseous and liquid effluents to determine compliance with DLCO 3.4.1.	12 months

D 3.5 SOLID RADIOACTIVE WASTE

D 3.5.1 Solid Radioactive Waste

DLCO 3.5.1 The appropriate equipment of the solid radwaste system shall be OPERABLE to process radioactive waste containing liquid and liquid destined for disposal subject to 10 CFR Part 61 to a form that meets applicable requirements of 10 CFR Part 61.56 before the waste is shipped from the site.

APPLICABILITY: During solid radwaste processing.

ACTIONS

CONDITION	REQUIRED ACTION	COMPLETION TIME
A. Container of waste does not comply with 10 CFR Part 61.56.	A.1 Suspend delivery to a carrier for transport.	Immediately

SURVEILLANCE REQUIREMENTS

SURVEILLANCE		FREQUENCY
DSR 3.5.1.1	Sample and analyze the dewatered radioactive waste for pH.	Prior to solidification of every 10th batch of dewatered waste
DSR 3.5.1.2	Inspect solidified or dewatered radioactive waste to insure that there is no free standing liquid on top of the solid waste.	Prior to capping each drum or High Integrity Container (HIC)
DSR 3.5.1.3	The following information should be reported for shipments of radioactive solid waste (radioactive material destined for waste processing or direct burial) and irradiated fuel transported from the site during the report period for the Radioactive Effluent Release Report per the Reporting Requirements in Technical Specification 5.6.3; a) The total quantity in cubic meters and the total radioactivity in curies for the categories or types of waste for the following: 1) Spent resins, filter sludges, evaporator bottoms. 2) Dry compressible waste, contaminated equipment, etc. 3) Irradiated components, control rods, etc. 4) Other (furnish description).	In accordance with 10 CFR 50.36a (continued)

SURVEILLANCE REQUIREMNTS (continued)

SURVEILLANCE			FREQUENCY
DSR 3.5.1.3 (continued)	b)	An estimate of the major nuclide composition in the categories of waste in 3.5.1.3 a above.	
	c)	The disposition of solid waste shipments. (Identify the number of shipments, the mode of transport, and the destination.)	
	d)	The disposition of irradiated fuel shipments. (Identify the number of shipments, the mode of transport, and the destination.)	
	e)	Estimates of the total error associated with certain total values should be provided in each report. These error values should be the best effort of an overall estimate of the errors associated with the totals in the report.	

COPY

D 4.0 MONITORING PROGRAM

D 4.1 Monitoring Program Compliance

DLCO 4.1 The radiological environmental monitoring program shall be conducted as specified in Table D4.1-1, using analytical techniques such that the detection capabilities in Table D4.1-2 are achieved.

APPLICABILITY: At all times.

ACTIONS

CONDITION	REQUIRED ACTION	COMPLETION TIME
A. Radiological environmental monitoring program not conducted as specified in Table D4.1-1.	A.1 Prepare and submit to the NRC in the Annual Radiological Environmental Report the reasons for not conducting the program in accordance with Table D4.1-1 and the plans for preventing recurrence.	May 15th following the end of the year
B. Environmental sampling medium is not available from a sampling location as specified in Table D4.1-1.	B.1 Report in the Annual Radiological Environmental Report the cause and location where replacement samples were obtained.	May 15th following the end of the year

SURVEILLANCE REQUIREMENTS

SURVEILLANCE		FREQUENCY
DSR 4.1.1	Perform radiological environmental sampling and analysis.	In accordance with Table D4.1-1
DSR 4.1.2	Conduct a land use census to identify the location of the nearest garden that is greater than 500 square feet in area and that yields edible leafy vegetables, the location of the nearest milk animal, and the location of the nearest resident in each of the 16 meteorological sectors within 3 miles of the Station.	12 months
DSR 4.1.3	Summarize results of radiological environmental analysis in the Annual Radiological Environmental Report.	May 15th following the end of the year
DSR 4.1.4	Submit results of the land use census in the Annual Radiological Environmental Report.	May 15th following the end of the year

Table D4.1-1 (Page 1 of 2)
Radiological Environmental Monitoring Program

EXPOSURE PATHWAY AND/OR SAMPLE	NUMBER OF SAMPLE STATIONS	SAMPLING AND COLLECTION FREQUENCY	TYPE AND FREQUENCY OF ANALYSIS
1. Airborne			
a. Radioiodine and Particulate	At least 5 locations	Continuous operation of sampler with sample collection as required by dust loading but at least once per 7 days.	Radioiodine canister: Analyze at least once per 7 days for I-131. Particulate sample: Analyze for gross beta radioactivity ≥ 24 hours following filter change. Perform gamma isotopic[a] analysis on each sample in which gross beta activity is >10 times the yearly mean of control samples. Perform gamma isotopic[a] analysis on composite (by location) sample at least once per 92 days.
2. Direct Radiation	At least 32 locations	Thermoluminescent Dosimeters (TLD)[b] exchange and read-out at least once per 92 days.	Gamma dose: At least once per 92 days.
3. Waterborne			
a. River Water	At least 2 locations	Collect a one (1) gallon grab sample at least once per 31 days.	Gamma isotopic[a] analysis of each sample. Composite grab sample for tritium analysis at least once per 92 days.
b. Ground Water	At least 2 locations	Collect a one (1) gallon grab sample at least once per 92 days.	Gamma isotopic[a] and tritium analysis of each sample.
c. Sediment from Shoreline	At least 1 location	Two (2) times a year, once in the spring and once in the fall.	Gamma isotopic[a] analysis of each sample.
4. Ingestion			
a. Milk (nearest producer)	At least 1 location	At least once per 15 days during Peak Pasture Period[c]; at least once per 31 days at other times.	Gamma isotopic[a] and I-131 analysis of each sample.
b. Milk (other producers)	At least 2 locations	At least once per 92 days.	Gamma isotopic[a] and I-131 analysis of each sample.
c. Fish	At least 2 locations	Two times per year (once in the summer and once in the fall). Attempt to include the following: 1. Bottom feeding species 2. Middle-Top feeding species	Gamma isotopic[a] analysis on edible portions.

(continued)

Table D4.1-1 (Page 2 of 2)
Radiological Environmental Monitoring Program

EXPOSURE PATHWAY AND/OR SAMPLE	NUMBER OF SAMPLE STATIONS	SAMPLING AND COLLECTION FREQUENCY	TYPE AND FREQUENCY OF ANALYSIS
4. (continued)			
d. *Food Products*	*Samples of three different* kinds of broad leaf vegetation grown nearest each of two different offsite locations of highest predicted annual average ground-level D/Q if milk sampling is not performed.	*Monthly when available.*	Gamma isotopic[a] and I-131 analysis
	One sample of each of the similar broad leaf vegetation grown 15-30 km distant in the least prevalent wind direction if milk sampling is not performed.	Monthly when available.	Gamma isotopic[a] and I-131 analysis

(a) Gamma isotopic analysis refers to high resolution gamma spectrum analysis as follows: the sample is scanned for gamma-ray activity. If no activity is found for a selected nuclide, the detection sensitivity for that nuclide will be calculated using the counting time, detector efficiency, gamma energy, geometry, and detector background appropriate to the particular sample in question. The following nineteen (19) nuclides shall be analyzed routinely:

BaLa-140	Cs-137	Ra-226
Be-7	Fe-59	Ru-103
Ce-141	I-131	Ru-106
Ce-144	K-40	Th-228
Co-58	Nb-95	Zn-65
Co-60	Mn-54	Zr-95
Cs-134		

Any radionuclide detected, i.e., having a measured concentration greater than the LLD, whether or not it is one of the 19 nuclides listed above, shall be regarded as present in the sample.

(b) Thermoluminescent Dosimeters (TLD) is a single phosphore. Two or more phosphores in one package are considered to be two or more dosimeters.

(c) Peak Pasture Period is June 1 through September 30 of each year.

Table D4.1-2 (Page 1 of 2)
Detection Capabilities for Environmental Sample Analysis

	LOWER LIMIT OF DETECTION[a] (LLD) [b]					
ANALYSIS	WATER (pCi/l)	AIRBORNE PARTICULATE OR GAS (pCi/m^3)	FISH (pCi/kg, wet)	MILK (pCi/l)	FOOD PRODUCTS (pCi/kg, wet)	SEDIMENT (pCi/kg, dry)
gross beta	4	1×10^{-2}				
H-3	2000					
Mn-54	15		130			
Fe-59	30		260			
Co-58	15		130			
Co-60	15		130			
Zn-65	30		260			
Zr-95	30					
Nb-95	15					
I-131	1 [c]	7×10^{-2}		1	60	
Cs-134	15	5×10^{-2}	130	15	60	150
Cs-137	18	6×10^{-2}	150	18	80	180
Ba-140	60			60		
La-140	15			15		

(a) This list does not mean that only these nuclides are to be detected and reported. Other peaks which are measurable and identifiable, together with the above nuclides, shall also be identified and reported.

Table D4.1-2 (Page 2 of 2)
Detection Capabilities for Environmental Sample Analysis

(b) The LLD is the "a priori" smallest concentration of radioactive material in a sample that will be detected with 95% probability (5% probability of falsely concluding that a blank observation represents a "real" signal).

For a particular measurement system (which may include radiochemical separation):

$$LLD = \frac{(4.66)(s_b)}{(E)(V)(2.22)\ (Y)\ (e^{-\lambda\Delta t})}$$

Where:

LLD is the "a priori" lower limit of detection as described above (as picocurie per unit mass or volume),

s_b is the standard deviation of the background counting rate or of the counting rate of a blank sample as appropriate (as counts per minute),

E is the counting efficiency (as counts per transformation),

V is the sample size (in units of mass or volume),

2.22 is the number of transformations per minute per picocurie,

Y is the fractional radiochemical yield (when applicable)

λ is the radioactive decay constant for the particular radionuclide, and

Δt is the elapsed time between sample collection (or midpoint of the sample collection period) and time of counting.

The value of s_b used in the calculation of the LLD for a detection system shall be based on the actual observed variance of the background counting rate or of the counting rate of the blank samples (as appropriate) rather than on an unverified theoretically predicted variance. In calculating the LLD for a radionuclide determined by gamma-ray spectrometry, the background shall include the typical contributions of other radionuclides normally present in the samples (e.g., potassium-40 in milk samples).

Analysis shall be performed in such a manner that the stated LLD's will be achieved under routine conditions. Occasionally background fluctuations, unavoidably small sample sizes, the presence of interfering nuclides, or other uncontrollable circumstances may render these LLD's unachievable. In such cases, the contributing factors will be identified and described in the Annual Radiological Environmental Report.

(c) LLD for drinking water.

D 4.0 MONITORING PROGRAM

D 4.2 Monitoring Program Concentration

DLCO 4.2 Radioactivity concentrations in sampled medium from the radiological environmental monitoring program shall not exceed values specified in Table D5.4-1 when averaged over a calender quarter.

APPLICABILITY: At all times.

ACTIONS

CONDITION	REQUIRED ACTION	COMPLETION TIME
A. Radioactivity concentrations of sampled medium from the radiological environmental monitoring program exceeds values specified in Table D5.4-1, averaged over a calender quarter which is attributable to release(s) from the Station.	A.1 Prepare and submit to the NRC a Special Report in accordance with Specification D 5.4 which includes an evaluation of any release conditions, environmental factors or other conditions which caused the value(s) to be exceeded.	31 days following the end of the quarter
B. Radioactivity concentrations of sampled medium from the radiological environmental monitoring program exceeds values specified in Table D5.4-1, averaged over a calender quarter which is not attributable to release(s) from the Station.	B.1 Report and explain in the Annual Radiological Environmental Report the results of the sample(s).	May 15th following the end of the year

D 4.0 MONITORING PROGRAM

D 4.3 Monitoring Program Dose

DLCO 4.3 The calculated personal dose associated with sampled exposure pathway(s) shall not exceed 120% of the calculated dose at the maximum dose location associated with like pathways at a location where sampling is conducted as specified in Table D4.1-1.

APPLICABILITY: At all times.

ACTIONS

CONDITION	REQUIRED ACTION		COMPLETION TIME
A. Location(s) identified at which the calculated dose associated with the exposure pathway(s) exceeds 120% of the calculated dose at the maximum dose location associated with like pathways at a location where sampling is conducted as specified in Table D4.1-1.	A.1	----------NOTE---------- Only applicable if samples are reasonably attainable at the new location. ---------- Add new sampling location(s) identified having maximum exposure potential to the radiological environmental monitoring program and Table D4.1-1.	92 days
	AND		
	A.2	Describe change made to Table D4.1-1 in the Annual Radiological Environmental Report.	May 15th following the end of the year

COPY

D 5.0 MISCELLANEOUS PROGRAMS/REPORTS

D 5.1 Interlaboratory Comparison Program

DLCO 5.1 Analyses shall be performed on radioactive materials supplied as part of the Interlaboratory Comparison Program.

APPLICABILITY: At all times.

ACTIONS

CONDITION	REQUIRED ACTION	COMPLETION TIME
A. Analyses not performed.	A.1 Report to the NRC in the Annual Radiological Environmental Report the corrective actions taken to prevent recurrence.	May 15th following the end of the year

SURVEILLANCE REQUIREMENTS

SURVEILLANCE		FREQUENCY
DSR 5.1.1	Submit a brief summary of the results obtained from the Interlaboratory Comparison Program in the Annual Radiological Environmental Report pursuant to Technical Specification 5.6.2.	May 15th following the end of the year

D 5.0 MISCELLANEOUS PROGRAMS/REPORTS

D 5.2 Annual Radiological Environmental Report

The Annual Radiological Environmental Report covering the operation of the unit during the previous calendar year shall be submitted by May 15 of each year. The report shall include summaries, interpretations, and analyses of trends of the results of the radiological environmental monitoring program for the reporting period. The material provided shall be consistent with the objectives outlined in the Offsite Dose Assessment Manual (ODAM), and in 10 CFR50, Appendix I, Section IV.B.2, IV.B.3, and IV.C.

The Annual Radiological Environmental Report shall include the results of analyses of all radiological environmental samples and of all environmental radiation measurements taken during the period pursuant to the locations specified in the table and figures in the ODAM, as well as summarized and tabulated results of these analyses and measurements in the format of the table in Regulatory Guide 4.8, December 1975. In the event that some individual results are not available for inclusion with the report, the report shall be submitted noting and explaining the reasons for the missing results. The missing data shall be submitted in a supplementary report as soon as possible.

Details of the report shall include the following:

a. A summary of doses to a Member of the Public beyond the SITE AND EXCLUSION AREA BOUNDARY due to Cooper Nuclear Station aqueous and airborne radioactive effluents, calculated in accordance with methods compatible with the ODAM.

b. A summary of the results of the land use census required in DSR 4.1.2.

c. Summarized and tabulated results in the format of Table D5.2-1 of analysis of samples required by the radiological environmental monitoring program, and taken during the report period.

d. A summary description of the radiological environmental monitoring program including any changes; a map of all sampling locations keyed to a table giving distances and directions from the reactor; and, the results of participation in the Interlaboratory Comparison Program, required by D 5.1.

e. Summaries, interpretations, and analysis of trends of the results of the radiological environmental monitoring program for the reporting period.

Table D5.2-1
Environmental Radiological Monitoring Program Summary

Name of Facility Cooper Nuclear Station Docket No. 50-298

Location of Facility Nemaha, Nebraska (County, State) Reporting Period

Medium of Pathways Sampled (Unit of Measurement)	Type & Total No. of Analyses Performed	Lower Limit of Detection (1) (LLD)	All Indicator Locations Mean [ ] (2) Range (2)	Location with Highest Annual Mean: Name Distance & Direction	Location with Highest Annual Mean: Mean [ ] (2) Range (2)	Control Locations Mean [ ] (2) Range (2)	No. of Reportable Occurrences

Table Notes:

(1) Nominal Lower Limit of Detection (LLD).
(2) Mean and Range based upon detectable measurements only. Fraction of detectable measurements at specified location indicated in brackets [ ].

D 5.0 MISCELLANEOUS PROGRAMS/REPORTS

D 5.3 Radioactive Effluent Release Report

The Radioactive Release Report covering the operation of the unit shall be submitted in accordance with 10 CFR 50.36a. The report shall include a summary of the quantities of radioactive liquid and gaseous effluents and solid waste released from the unit. The material provided shall be consistent with the objectives outlined in the ODAM and the Process Control Program and in conformance with 10 CFR 50.36a and 10 CFR 50, Appendix I, Section IV.B.1.

The Radioactive Effluent Release Report shall be submitted to the NRC by May 1 of each year and shall include the following:

a. A summary by calendar quarter of the quantities of radioactive liquid and gaseous effluents released from the Station, reported in the format recommended in Regulatory Guide 1.21, Appendix B, Tables 1 and 2.

b. A summary of radioactive solid waste shipped from CNS, including information provided in DSR 3.5.1.3.

c. A summary of meteorological data collected during the year.

d. A list and brief description of each unplanned release of gaseous or liquid radioactive effluent that causes a limit in DLCO 3.1.1, DLCO 3.1.3, DLCO 3.2.1, DLCO 3.2.2 or DLCO 3.2.3 to be exceeded.

e. Calculated offsite dose to humans resulting from the release of effluents and their subsequent dispersion on the atmosphere reported in accordance with Regulatory Guide 1.21.

f. A summary of changes made to the CNS Process Control Program. The summary shall contain sufficiently detailed information to totally support the rationale for the change without benefit of additional or supplemental information; a determination that the change did not reduce the overall conformance of the solidified waste product to existing criteria for solid wastes; and documentation of the fact that the change has been reviewed and found acceptable by the SORC.

D 5.3 Radioactive Effluent Release Report (continued)

g. Changes made to the CNS Offsite Dose Assessment Manual shall be submitted to the NRC in the form of a complete, legible copy of the entire ODAM as part of, or concurrent with the Radioactive Effluent Release Report for the period of the report in which any change in the ODAM was made. Each change shall be identified by markings in the margin of the affected pages, clearly indicating the area of the page that was changed, and shall indicate the date (i.e., month and year) the change was implemented.

D 5.0 MISCELLANEOUS PROGRAMS/REPORTS

D 5.4 Special Reports

Special reports shall be submitted to the Director, Nuclear Reactor Regulation, USNRC, Washington, D.C. 20555 and to the NRC Regional Administrator within the time period specified for each report.

Special reports (in lieu of Licensee Event Reports) may be required covering inspections, test and maintenance activities. These special reports are determined on an individual basis for each unit and their preparation and submittal are designated in the Offsite Dose Assessment Manual.

A special report is required if measured levels of radioactivity in an environmental sampling medium determined to exceed the reporting level values of Table D5.4-1 when averaged over any calendar quarter sampling period. When more than one of the radionuclides in Table D5.4-1 are detected in the sampling medium, this report shall be submitted if:

$$\frac{\text{Concentration (1)}}{\text{Limit Level (1)}} + \frac{\text{Concentration (2)}}{\text{Limit Level (2)}} + \ldots \geq 1.0$$

When radionuclides other than those in Table D5.4-1 are detected and are the result of plant effluents, this report shall be submitted if the potential annual dose to an individual is equal to or greater than the calendar year limits of DLCO 3.1.3 and 3.2.3. This report is not required if the measured level of radioactivity was not the result of plant effluents; however, in such an event, the condition shall be reported and described in the Annual Radiological Environmental Report.

Table D5.4-1
Reporting Levels for Radioactivity Concentrations in Environmental Samples

	Reporting Levels				
ANALYSIS	WATER (pCi/1)	AIRBORNE PARTICULATE OR GASES (pCi/m^3)	FISH (pCi/Kg, Wet)	MILK (pCi/l)	FOOD PRODUCTS (pCi/Kg, Wet)
H-3	2E + 4(a) 3E + 4(c)				
Mn-54	1E + 3		3E + 4		
Fe-59	4E + 2		1E + 4		
Co-58	1E + 3		3E + 4		
Co-60	3E + 2		1E + 4		
Zn-65	3E + 2		2E + 4		
Zr-Nb-95	4E + 2(b)				
I-131	2	0.9		3	1E + 2
Cs-134	30	10	1E + 3	60	1E + 3
Cs-137	50	20	2E + 3	70	2E + 3
Ba-La-140	2E + 2(b)			3E + 2(b)	

(a) For drinking water samples. This is the 40 CFR 141 value.

(b) Concentration of parent or daughter.

(c) For samples of water not used as a source of drinking water.

D 5.0 MISCELLANEOUS PROGRAMS/REPORTS

D 5.5 Major Changes to Radioactive Waste Treatment Systems (Liquid, Gaseous, and Solid)

The radioactive waste treatment systems (liquid, gaseous, and solid) are those systems described in the facility Safety Analysis Report and amendments thereto, which are used to maintain that control over radioactive materials in gaseous and liquid effluents and in solid waste packaged for offsite shipment required to meet the DLCO's set forth in Specifications D 3.1.1, D 3.1.2, D 3.1.3, D 3.1.4, D 3.2.1, D 3.2.2, D 3.2.3, D 3.2.4, D 3.2.5, D 3.2.6, D 3.2.7, D 3.3.2, D 3.4.1, and D 3.5.1. The NRC is notified of major changes to these systems under the provisions of 10 CFR Part 50.59 and Part 50.71 (USAR revisions).

COPY

OFFSITE DOSE ASSESSMENT MANUAL
APPENDIX D

TABLE OF CONTENTS - BASES

B 3.0 ODAM SPECIFICATION APPLICABILITY . . . . . B 3.0-1

B 3.1 LIQUID EFFLUENTS
B 3.1.1 Liquid Effluents Concentration . . . . . B 3.1-1
B 3.1.2 Liquid Waste Concentration . . . . . B 3.1-2
B 3.1.3 Liquid Effluents Dose . . . . . B 3.1-5
B 3.1.4 Outside Temporary Storage of Radioactive Liquid . . . . . B 3.1-9

B 3.2 GASEOUS EFFLUENTS
B 3.2.1 Gaseous Effluents Concentration . . . . . B 3.2-1
B 3.2.2 Noble Gas Dose . . . . . B 3.2-2
B 3.2.3 Iodine and Particulates . . . . . B 3.2-3
B 3.2.4 Offgas Treatment System . . . . . B 3.2-4
B 3.2.5 Exhaust Ventilation Treatment System . . . . . B 3.2-5
B 3.2.6 Hydrogen Concentration . . . . . B 3.2-6
B 3.2.7 Primary Containment Venting and Purging . . . . . B 3.2-7

B 3.3 INSTRUMENTATION
B 3.3.1 Liquid Effluent Monitoring . . . . . B 3.3-1
B 3.3.2 Gaseous Effluent Monitoring . . . . . B 3.3-2

B 3.4 LIQUID/GASEOUS EFFLUENTS DOSE
B 3.4.1 Liquid/Gaseous Effluents Dose . . . . . B 3.4-1

B 3.5 SOLID RADIOACTIVE WASTE
B 3.5.1 Solid Radioactive Waste . . . . . B 3.5-1

B 4.0 MONITORING PROGRAM
B 4.1 Monitoring Program Compliance . . . . . B 4.1-1
B 4.2 Monitoring Program Concentration . . . . . B 4.2-1
B 4.3 Monitoring Program Dose . . . . . B 4.3-1

B 5.0 MISCELLANEOUS PROGRAMS/REPORTS
B 5.1 Interlaboratory Comparison Program . . . . . B 5.1-1
B 5.2 Annual Radiological Environmental Report . . . . . B 5.2-1
B 5.3 Radiological Effluent Release Report . . . . . B 5.3-1
B 5.4 Special Reports . . . . . B 5.4-1
B 5.5 Major Changes to Radioactive Waste Treatment Systems (Liquid, Gaseous, and Solid) . . . . . B 5.5-1

B 3.0 ODAM Specification Applicability

BASES

DLCOs 3.0.1, 3.0.2, and 3.0.5, and DSRs 3.0.1 and 3.0.2 reflect parallel requirements in the Technical Specifications. Refer to the Technical Specification Bases for appropriate discussion.

DSR 3.0.3 establishes the flexibility to defer declaring affected equipment inoperable or an affected variable outside the specified limits when a Surveillance has not been complete within the specified Frequency. A delay period of up to 24 hours or up to the limit of the specified Frequency, whichever is less, applies from the point in time that it is discovered that the Surveillance has not been performed in accordance with DSR 3.0.2, and not at the time that the specified Frequency was not met. This delay period provides adequate time to complete Surveillances that have been missed. This delay period permits the completion of a Surveillance before complying with Required Actions or other remedial measures that might preclude completion of the Surveillance.

The basis for this delay period includes consideration of unit conditions, adequate planning, availability of personnel, the time required to perform the Surveillance, the safety significance of the delay in completing the required Surveillance, and the recognition that the most probable result of any particular Surveillance being performed is the verification of conformance with the requirements.

When a Surveillance with a Frequency based not on time intervals, but upon specified unit conditions or operational situations, is discovered not to have been performed when specified, DSR 3.0.3 allows the full delay period of 24 hours to perform the Surveillance.

DSR 3.0.3 also provides a time limit for completion of Surveillances that become applicable as a consequence of MODE changes imposed by Required Actions.

Failure to comply with specified Frequencies for DSRs is expected to be an infrequent occurrence. Use of the delay period established by DSR 3.0.3 is a flexibility which is not intended to be used as an operational convenience to extend Surveillance intervals.

If a Surveillance is not completed within the allowed delay period, then the equipment is considered inoperable or the variable is considered outside the specified limits and the Completion Times of the Required Actions for the applicable DLCO Conditions begin immediately upon expiration of the delay period. If a Surveillance is failed within the delay period, then the equipment is inoperable, or the variable is outside the specified limits and the Completion Times of the Required Actions for the applicable DLCO Conditions begin immediately upon the failure of the Surveillance.

Completion of the Surveillance within the delay period allowed by this Specification, or within the Completion Time of the ACTIONS, restores compliance with DSR 3.0.1.

(continued)

BASES
(continued)

ODAM Specification DLCO 3.0.3, in lieu of imposing a plant shutdown as paralleled in Technical Specification 3.0.3, requires: (a) an Action to initiate efforts to restore compliance with the ODAM or associated Actions; and (b) an Action that requires entering the circumstances into the Corrective Action Program (CAP). These actions ensure that the appropriate actions continue to be focused on and that the circumstances concerning failure to comply with the ODAM Actions would be reviewed. This review will be conducted in accordance with the procedural guidance for CAP Notifications.

There are no ODAM 3.0 Specifications that parallel Technical Specification LCO 3.0.4 or SR 3.0.4. Restrictions in entering MODES or other specified conditions in the Applicability have historically not been applied to ODAM Specifications. There are also no ODAM 3.0 Specifications that parallel Technical Specification LCO 3.0.6 and LCO 3.0.7, which allow for exceptions and revisions of other Technical Specifications. They are not applicable to the ODAM since it is not permitted to allow the ODAM to revise a Technical Specification.

(*Note that there currently are no identified ODAM DLCOs that support Technical Specification systems; however, this discussion is presented to address the philosophy that would be applied.*) An allowance similar to Technical Specification LCO 3.0.6 does not apply to the ODAM. When a Technical Specification supported system LCO is discovered to be not met solely due to a ODAM support system DLCO not met, appropriate Technical Specification ACTIONS are required to be entered immediately. This applies even in instances where the ODAM contains a delay prior to declaring a Technical Specification supported system inoperable. In this case, certain ODAM inoperabilities may not directly impact the OPERABILITY of the Technical Specification supported system and delayed declaration of inoperability of the supported system is acceptable. In other cases, discovered support system inoperabilities that directly result in supported system inability to perform the safety function, should result in immediate declaration of inoperability of the supported system.

Technical Specification LCO 3.0.7 has no parallel in the ODAM since it provides for explicit changes to specified Technical Specifications by the Section 3.10 Specifications. However, in the event that LCO 3.0.7 provides for changes to the Technical Specification MODE definitions by the Section 3.10 Specifications, the revised MODE definitions apply to all plant references, including ODAM references.

B 3.1 LIQUID EFFLUENTS

B 3.1.1 Liquid Effluents Concentration

BASES

This specification is provided to ensure that the concentration of radioactive materials released in liquid waste effluents from the site to unrestricted areas will be less than the concentration levels specified in 10 CFR Part 20.1302. This limitation provides additional assurance that the levels of radioactive materials in bodies of water outside the site will result in exposures within (1) the Section IV.A guides on technical specifications in Appendix I, 10 CFR Part 50, for an individual and (2) the limits of 10 CFR Part 20.1301 and 20.1302(b)(2)(i) to the population. The concentration limit for noble gases is based upon the assumption that Xe-135 is the controlling radioisotope and its MPC in air (submersion) was converted to an equivalent concentration in water using the methods described in International Commission on Radiological Protection (ICRP) Publication 2.

Since Service Water is not a normal or expected source of significant radioactive release, routine sampling and monitoring for radioactivity is precautionary. An activity concentration of 3×10^{-6} µCi/ml in Service Water effluent is diluted in the discharge canal to about 1.5% of the 10 CFR 20 Appendix B Table 2 Column 2 concentration with only one circulating water pump operating. During normal Station operation the dilution would be even greater. By monitoring Service Water effluent continuously for radioactivity and by confirmatory sampling weekly, reasonable assurance that its activity concentration can be kept to a small fraction of the 10 CFR Part 20.1302 limit and within the Specification D 3.1.3 limit is provided.

By monitoring Service Water continuously and liquid radwaste continuously during discharge with the monitor set to alarm or trip before the limit specified in 10 CFR 20.1302 is exceeded, reasonable assurance of compliance with Specification D 3.1.1 is provided. Verification that radioactivity in liquid effluent averaged only a small fraction of the concentration limit is provided by calculations demonstrating compliance with Specification D 3.1.3.

Compliance with 10 CFR Part 20.1302(b)(2)(i) implies that the concentration limit represented by 10 CFR Part 20, Appendix B, Table 2 will be met within a suitable and reasonable averaging time for assessing compliance. That averaging time is dependent upon the resolving time of the measurements or estimates which are used to evaluate compliance. Assessment of compliance is done by sampling and analysis according to DSR 3.1.1.2, by estimating or measuring the maximum release flow and the minimum dilution flow coincident during the period of release represented by the sample, and by computing the concentration as a fraction of the limit beyond the SITE AND EXCLUSION AREA BOUNDARY periodically on the basis of these data.

Reporting by Special Reports and other reports required by the ODAM and Section 5.6 of Technical Specifications is used in lieu of reporting per 10 CFR 50.73.

B 3.1 LIQUID EFFLUENTS

B 3.1.2 Liquid Waste Concentration

BASES

Specification D 3.1.2 implements the requirements of 10 CFR Part 50.36a(a)(1) that operating procedures be established and followed and that equipment be maintained and used to keep releases to the environment as low as is reasonably achievable. The OPERABILITY of the liquid radwaste treatment system ensures that the appropriate portions will be available for use whenever liquid effluents require treatment prior to release to the environment. The specification that the portions of the system which were used to establish compliance with the design objectives in 10 CFR Part 50, Appendix I, Section II be used when specified provides reasonable assurance that releases of radioactive material in liquid effluent will be kept as low as is reasonably achievable. The activity concentration, 0.01 μCi/ml, below which liquid radwaste treatment would not be cost beneficial, and therefore not required, is demonstrated below:

The quantity of radioactive material in liquid effluent released annually from Cooper Station has been calculated to be[1]

total iodines	3.65 curies
total others (less H^3)	0.7
total	4.35 curies

The population dose commitment resulting from the radioactive material in liquid effluent released annually has been calculated to be

thyroid	1.95 manrem
total body	0.56
total	2.5 manrem

Therefore, population doses are about 0.5 manrem per curie of iodine released and about 0.8 manrem per curie of other radionuclides (less H^3) released in liquids. It would be conservative to assume one manrem committed per curie released in liquid effluent.

The volume of liquid waste processed and intended for discharge is estimated to be:

Low Purity Waste	5700 gal/day	1.8×10^6 gal/yr
Chem Waste + Demin Regenerant Waste	4000 gal/day	1.2×10^6 gal/yr

(continued)

BASES

(continued)

The annual costs to operate the radwaste processing equipment, neglecting credit for capital recovery, are estimated according to Regulatory Guide 1.110 to be:

Dirty Waste Ionex	$ 88,000/yr
Evaporator	$114,000/yr

Unit volume operating costs are about:

$$\text{Cost to ion exchanger} = \frac{\$\ 88,000}{1.8E{+}6\ \text{gal}} = \$0.05/\text{gal}$$

$$\text{Cost to evaporate} = \frac{\$114,000}{1.2E{+}6\ \text{gal}} = \$0.10/\text{gal}$$

Assuming the cost-benefit balance is $1,000 expenditure per manrem reduction and assuming treatment removes all radioactivity from the liquid, then

(1) the activity concentration in a batch below which treatment is not cost-beneficial is

$$C = \frac{\$88,000}{1.8E{+}6\ \text{gal} \times 3785\ \frac{\text{ml}}{\text{gal}}} \times \frac{1\ \text{curie}}{\text{manrem}} \times \frac{10^6\ \mu\text{Ci}}{\text{curie}} \times \frac{1\ \text{manrem}}{\$1,000}$$

$$C = 0.013\ \mu\text{Ci/ml}$$

(2) the activity concentration below which evaporation is not costbeneficial is

$$C = \frac{\$114,000}{1.2E{+}6\ \text{gal} \times 3785\ \frac{\text{ml}}{\text{gal}}} \times \frac{1\ \text{curie}}{\text{manrem}} \times \frac{10^6\ \mu\text{Ci}}{\text{curie}} \times \frac{1\ \text{manrem}}{\$1,000}$$

$$C = 0.025\ \mu\text{Ci/ml}$$

Therefore, to one significant digit, radwaste treatment of liquids containing less than 0.01 μCi/ml is not justified.

(continued)

BASES

(continued)

[1]Demonstration of Compliance with 10 CFR 50 Appendix I, Revision 1 and Supplement 2, Nebraska Public Power District, Cooper Nuclear Station, January 9, 1978.

B 3.1 LIQUID EFFLUENTS

B 3.1.3 Liquid Effluents Dose

BASES

Note: The Bases discussion refers to "technical specifications" and quotes the Staff's use of "technical specifications." The statements and opinions pre-date Generic Letter 89-01, Implementation of Programmatic Controls for Radiological Effluent Technical Specifications in the Administrative Controls Section of the Technical Specifications and the relocation of procedural details of RETS to the Offsite Dose Calculation Manual or to the Process Control Program.

Generic Letter 89-01 provides the guidance and justification for relocation of these "technical specifications" to the Offsite Dose Assessment (ODAM) Manual and the Process Control Program (PCP). Therefore, "technical specifications" as used in this Bases refers to ODAM Specifications.

Specifications D 3.1.3, D 3.2.2 and D 3.2.3 implement the requirements of 10 CFR Part 50.36a and of 10 CFR Part 50, Appendix I, Section IV. These specifications state ODAM LIMITING CONDITIONS FOR OPERATION (DLCO) to keep levels of radioactive materials in LWR effluents as low as is reasonably achievable. Compliance with these specifications will also keep average releases of radioactive material in effluents at small percentages of the limits specified in 10 CFR Part 20.1301. Surveillance Requirements provide for the measurement of releases and calculation of doses to verify compliance with the Specifications. Action statements in these Specifications implement the requirements of 10 CFR Part 50.36(c)(2) and 10 CFR Part 50, Appendix I, Section IV.A in the event an LCO is not met. Annual dose limitations stated in Specifications D 3.1.3, D 3.2.2 and D 3.2.3 are not strict limits as used elsewhere in the Technical Specifications (are not an immediate safety concern) but do obligate NPPD to take the applicable Required Action in Specifications D 3.1.3, D 3.2.2 and D 3.2.3.

(continued)

(continued)

10 CFR Part 50 contains two distinctly separate statements of requirements pertaining to effluents from nuclear power reactors. The first concerns a description of equipment to maintain control over radioactive materials in effluents, determination of design objectives, and means to be employed to keep radioactivity in effluents ALARA. This requirement is stated in Part 50, Section 34a and Appendix I, Section II. Appendix I, Section III stipulates that conformance with the guidance on design objectives be demonstrated by calculations (since demonstration is expected to be prospective). The other is a requirement for developing limiting conditions for operation in technical specifications. It is stated in 10 CFR Part 50, Section 36a and Appendix I, Section IV. Both the intent of the Commission and the requirement are clearly stated in the Opinion of the Commission; [1] relevant paragraphs from that document follow:

> Section 50.36a(b) of 10 CFR Part 50 provides that licensees shall be guided by certain considerations in establishing and implementing operating procedures specified in technical specifications which take into account the need for operating flexibility and at the same time ensure that the licensee will exert his best efforts to keep levels of radioactive materials in effluents as low as practicable. The Appendix I that we adopt provides more specific guidance to licensees in this respect.
>
> A. The Rule
>
> Section IV of Appendix I specifies action levels for the licensee. If, for any individual light water cooled nuclear power reactor, the quantity of radioactive material actually released in effluents to unrestricted areas during any calendar quarter is such as to cause radiation exposure, calculated on the same basis as the design objective exposure, which would exceed one-half the annual design objective exposure, the licensee shall make an investigation to identify the causes of these high release rates, define and initiate a program of action to correct the situation, and report these actions to the Commission within 30 days of the end of the calendar quarter.

The conclusion of the NRC Staff in the Appendix I Rulemaking Hearing [2] agrees with that of the Commission. The Staff recommended, "...that the limiting conditions for operation described in Appendix I, Section IV be applicable upon publication to technical specifications included in any license authorizing operation of a light water cooled nuclear power reactor..." (p. 73).

(continued)

BASES

(continued)

The action to be taken by a licensee in the event a limiting condition is exceeded, is stated in Appendix I, Section IV.A and in the Opinion of the Commission.[3] ODAM Specifications D 3.1.3, D 3.2.2, D 3.2.3 and Surveillances DSR 3.1.3.1, 3.1.3.2, 3.2.2.1, 3.2.3.1 and 3.2.3.2 for Cooper Station conform to this requirement.

Guidance for developing limiting conditions for operation for surveillance and monitoring is included in Appendix I, Section IV.B.

Although "it is expected that the annual releases of radioactive material in effluents from light water cooled nuclear power reactors can generally be maintained within the levels set forth as numerical guides for design objectives in Section II" (Appendix I, Section IV), no recommendation was made by either the Staff in its Concluding Statement[4] or by the Commission in its Opinion[5] that design objective values should appear as technical specification limits. The Opinion of the Commission and the statement of Appendix I are clear. Limiting conditions of operation (LCO) related to the quantity of radioactive material in effluents released to an unrestricted area stated in technical specifications shall conform to Appendix I, Section IV.A. Licensee action in the event an LCO is exceeded should be in accord with Section IV.A. Finally, surveillance and monitoring of effluents and the environment should conform to Section IV.B.

With the implementation of Specification D 3.1.3 and Surveillances DSR 3.1.3.1 and 3.1.3.2, there is reasonable assurance that Station operation will not cause a radionuclide concentration in public drinking water taken from the River that exceeds the standard for anthropogenic radioactivity in community drinking water.

[1]NRC Commissioners, "Opinion of the Commission," in the Appendix I Rulemaking hearing, Docket Rm 502, p. 101-102, April 30, 1975.

[2]NRC Staff, "Concluding Statement of the Regulatory Staff," in the Appendix I Rule- making Hearing, Docket RM 502, pp. 17, 69, 73, 115, February, 1974.

[3]NRC Commissioners, p. 101

[4]NRC Staff, op. cit.

[5]NRC Commissioners, op. cit.

(continued)

BASES

(continued)

[6]Generic Letter 89-01, Implementation of Programmatic Controls for Radiological Effluent Technical Specifications in the Administrative Controls Section of the Technical Specifications and the relocation of procedural details of RETS to the Offsite Dose Calculation Manual or to the Process Control Program.

B 3.1 LIQUID EFFLUENTS

B 3.1.4 Outside Temporary Storage of Radioactive Liquid

BASES

Custom Technical Specifications Bases did not exist.

B 3.2 GASEOUS EFFLUENTS

B 3.2.1 Gaseous Effluents Concentration

BASES

DLCO 3.2.1(a) is included to assure that a measure of control is provided over the concentration of radionuclides in air leaving the exclusion area. Radioactive noble gases are monitored by instruments that provide a measure of release rate and cause automatic alarm when the noble gas concentration beyond the SITE AND EXCLUSION AREA BOUNDARY is expected to exceed the dose rate specified in DLCO 3.2.1(a). With prompt action to reduce the radioactive noble gas concentration in effluent following alarm initiation, it can be maintained at a small fraction of the annual limit. The specified release rate limits restrict the corresponding gamma and beta dose rates above background to an individual at or beyond the SITE AND EXCLUSION AREA BOUNDARY to ≤ 500 mrem/year to the total body or to ≤ 3000 mrem/year to the skin.

Radioiodines and radionuclides in particulate form are sampled with integrating samplers that permit assessment of the average release rate during each sample collection period. By complying with DLCO 3.2.2 and 3.2.3 the average concentration beyond the SITE AND EXCLUSION AREA BOUNDARY will be maintained at a small fraction of the 10 CFR Part 20.1302(b)(2)(i) concentration limit.

B 3.2 GASEOUS EFFLUENTS

B 3.2.2 Noble Gases Dose

BASES

Assessments of dose required by Surveillances DSR 3.2.2.1 and DSR 3.2.3.2 to verify compliance with Appendix I, Section IV is based on measured radioactivity in gaseous effluent and on calculational methods stated in the ODAM. Pathways of exposure and location of individuals are selected such that the dose to a nearby resident is unlikely to be underestimated. Dose assessment methodology described in the ODAM for gaseous effluent will be consistent with the methodology in Regulatory Guides 1.109 and 1.111. Cumulative and projected assessments of dose made during a quarter are based on historical average, or reference (the same period of record used in the design objective Appendix I evaluation) atmospheric conditions. Assessments made for the Annual Radiological Environmental Report will be based on quarterly and annual averages of atmospheric conditions during the period of release.

The bases for Specification D 3.2.2 and Surveillance DSR 3.2.2.1 are also discussed in the bases for Specification D 3.1.3 and Surveillances DSR 3.1.3.1 and 3.1.3.2.

B 3.2 GASEOUS EFFLUENTS

B 3.2.3 Iodine and Particulates

BASES

This bases for Specification D 3.2.3 and Surveillances DSR 3.2.3.1 and 3.2.3.2 are discussed in the bases for Specification D 3.1.3 and Surveillances DSR 3.1.3.1 and 3.1.3.2.

B 3.2 GASEOUS EFFLUENT

B 3.2.4 Offgas Treatment System

BASES

The OPERABILITY of the gaseous radwaste treatment system ensures that the system will be available for use whenever gaseous effluents require treatment prior to release to the environment. The requirement that the appropriate portions of this system be used when specified provides reasonable assurance that the releases of radioactive materials in gaseous effluents will be kept "as low as is reasonably achievable." This specification implements the requirements of 10 CFR Part 50.36a, General Design Criterion 60 of Appendix A to 10 CFR Part 50, and design objective Section IID of Appendix I to 10 CFR Part 50. The specified limits governing the use of appropriate portions of this system are specified as a suitable fraction of the dose design objectives set forth in Sections II.B and II.C of Appendix I, 10 CFR Part 50, for gaseous effluents.

B 3.2 GASEOUS EFFLUENTS

B 3.2.5 Exhaust Ventilation Treatment Systems

BASES

An Exhaust Ventilation Treatment System (EVTS) is a system intended to remove radioiodine or radioactive material in particulate form from gaseous effluent by passing exhaust ventilation air through charcoal absorbers and/or HEPA filters before exhausting the air to the environment. An EVTS is not intended to affect noble gas in gaseous effluent. Engineered Safety Feature (ESF) gaseous treatment systems are not considered to be EVTS. The Standby Gas Treatment System is an ESF and not an EVTS. EVTS are specifically identified in ODAM Figure 3-1.

The OPERABILITY of the exhaust ventilation treatment systems ensures that the systems will be available for use whenever gaseous effluents require treatment prior to release to the environment. The requirement that the appropriate portions of these systems be used when specified provides reasonable assurance that the releases of radioactive materials in gaseous effluents will be kept "as low as is reasonably achievable." This specification implements the requirements of 10 CFR Part 50.36a, General Design Criterion 60 of Appendix A to 10 CFR Part 50, and design objective Section IID of Appendix I to 10 CFR Part 50. The specified limits governing the use of appropriate portions of the system are specified as a suitable fraction of the dose design objectives set forth in Sections II.B and II.C of Appendix I, 10 CFR Part 50, for gaseous effluents.

B 3.2 GASEOUS EFFLUENTS

B 3.2.6 Hydrogen Concentration

BASES

This specification is provided to ensure that the concentration of potentially explosive gas mixtures contained in the waste gas treatment system is maintained below the flammability limits of hydrogen and oxygen. While the Augmented Treatment System is in service the hydrogen and oxygen concentrations are prevented from reaching the flammability limits. Maintaining the concentration of hydrogen below its flammability limit provides assurance that the releases of radioactive materials will be controlled in conformance with the requirements of General Design Criterion 60 of Appendix A to 10 CFR 50.

For this specification, reporting by Special Reports and the other reports required by the ODAM and Section 5.6 of Technical Specifications is used in lieu of reporting per 10 CFR 50.73.

B 3.2 GASEOUS RELEASES

B 3.2.7 Primary Containment Venting and Purging

BASES

This specification provides reasonable assurance that releases of Iodine from primary containment purging during power operations, during startup while performing primary containment inerting within 24 hours after shutdown, and while de-inerting will not be excessively large, particularly due to Iodine spiking. The exemptions to using the SBGT system are intended to minimize the time the SBGT system is on line while coolant temperature is greater than 200°F, hence to decrease the probability of damage to the SBGT filters that could occur from overpressurization due to a LOCA and the main purge and vent valves open. The exception in Note 2 is restricted by a requirement that one channel of the drywell atmospheric particulate and gaseous monitoring system is OPERABLE and not in the alarm state. This restriction provides reasonable assurance that releases from primary containment purging operations will not exceed the annual dose limits of 10CFR20 for unrestricted use.

For this specification, reporting by Special Reports and the other reports required by the ODAM and Section 5.6 of Technical Specifications is used in lieu of reporting per 10 CFR 50.73.

B 3.3 INSTRUMENTATION

B 3.3.1 Liquid Effluent Monitoring

BASES

The radioactive liquid effluent instrumentation is provided to monitor and control, as applicable, the release of radioactive material in liquid effluents. The OPERABILITY and use of these instruments implements the requirements of 10 CFR Part 50, Appendix A, General Design Criteria 60, 63, and 64. The alarm and/or trip setpoints for these instruments are calculated in the manner described in the ODAM to assure that the alarm and/or trip will occur before the limit specified in 10 CFR Part 20.1302 is exceeded. Control of the normal liquid discharge pathway is assured by station procedures governing locked discharge valves and valve line-up verification.

The liquid radwaste monitor assures that all liquid discharged to the discharge canal does not exceed the limits of Specification D 3.1.1. Upon sensing a high discharge level, an isolation signal is generated which closes the radwaste discharge valve. The set point is adjustable to compensate for variable isotopic discharges and dilution flow rates.

For this specification, reporting by Special Reports and the other reports required by the ODAM and Section 5.6 of Technical Specifications is used in lieu of reporting per 10 CFR 50.73.

B 3.3 INSTRUMENTATION

B 3.3.2 Gaseous Effluent Monitoring

BASES

The radioactive gaseous effluent instrumentation is provided to monitor and control, as applicable, the releases of radioactive materials in gaseous effluents during actual or potential releases of gaseous effluents. The location of this instrumentation is indicated by a Figure in the ODAM (page 48). The simplified flow diagram shows the gaseous effluent treatment and monitoring equipment and defines the delay system (30 minute hold up line) and the treatment system (AOG charcoal beds). The alarm/trip setpoints for these instruments shall be calculated in accordance with methods in the ODAM, which have been reviewed by NRC, to ensure that the alarm will occur prior to exceeding the limits of 10 CFR Part 20. The process monitoring instrumentation includes provisions for monitoring the concentrations of potentially explosive gas mixtures in the augmented offgas treatment system. The OPERABILITY and use of this instrumentation is consistent with the requirements of General Design Criteria 60, 63, and 64 of Appendix A to 10 CFR Part 50.

Two air ejector off-gas monitors are provided and when their trip point is reached, cause an isolation of the air ejector off-gas line. Isolation is initiated when both instruments reach their high trip point or one has an upscale trip and the other a downscale trip. There is a fifteen minute delay accounted for by the 30-minute holdup time of the off-gas before it reaches the stack. Both instruments are required for trip but the instruments are so designed that any instrument failure gives a downscale trip. Radioactive sources ("bug-sources") may be installed. During periods of low power operation or reactor shutdown when process background levels are low and downscale trips may pose operational issues, the bug sources maintain on-scale indication and inhibit unnecessary isolations initiated by two downscale channels. This does not defeat the downscale nor inoperable alarm and trip functions which continue to function in the event of a failed instrument or open circuit. The trip setting of 1.0 ci/sec (prior to 30 min. delay) provides an improved capability to detect fuel pin cladding failures to allow prevention of serious degradation of fuel pin cladding integrity which might result from plant operation with a misoriented or misloaded fuel assembly. This limit is more restrictive than 0.39 ci/sec noble gas release rate at the air ejectors (after 30 min. delay) which was used as the source term for an accident analysis of the augmented off-gas system. Using the .39 ci/sec source term, the maximum off-site total body dose would be less than the .5 rem limit.

A footnote has been added to Table D3.3.2-1 to indicate that a channel of the Noble Gas Activity Monitor, the Iodine Sampler Cartridge, or the Particulate Sampler Filter, in the ventilation monitoring systems for the Reactor Building, Radwaste Building, Turbine Building, Elevated Release Point, and Multi Purpose Facility, may be removed from service for up to 30 minutes for changing particulate filters or iodine cartridges or for the low flow alarm check without entering the conditions and required actions. The channel will continue to be declared inoperable when removed from service, but the Conditions and Required Actions will not be entered due to the short duration that the channel is inoperable and the facts that the system must be removed from service to perform the required ODAM surveillance and is returned to an

OPERABLE condition prior to expiration of the Completion Time for initiating the Required Action.

A note has been added to Required Action I.1 stating that continuous monitoring may be discontinued for up to 30 minutes only for changing particulate filters and iodine cartridges when the backup monitoring system is in service. Replacement of these filters and cartridges is a normal activity, and not a condition that is appropriate for entry into the Corrective Action Program or for including in the Radioactivity Effluent Release Report. This allowance to discontinue the sampling is acceptable based on (1) four hours are allowed to begin the continuous collection of samples with auxiliary equipment when the primary monitoring system is inoperable, (2) occasions when the primary monitoring system is inoperable and the backup monitoring system is in service are expected to be rare, and (3) the short period of time (30 minutes) that the monitor is allowed to be out of service.

In the event no flow rate measurement device is operable on a gaseous stream, alternative 24-hour estimates are adequate since the system design is constant flow and loss of flow is alarmed in the control room.

Required Action G.1.2 and G.3.1 requires monitoring of the recombiner exhaust temperature. This temperature is being monitored for changes rather than for any maximum temperature or range of temperatures. This temperature is affected by various plant parameters, including reactor power level, change of AOG dryer beds, air in-leakage into the main condenser, and the quantity and rate of hydrogen injection into reactor coolant for chemistry control. The recombiner exhaust temperature is expected to remain steady if none of these parameters are changing. If a temperature fluctuation greater than 10°F is observed, Condition H is entered and Required Action H.1 shall be performed unless the temperature fluctuation can be explained by changes in plant parameters.

For this specification, reporting by Special Reports and the other reports required by the ODAM and Section 5.6 of Technical Specifications is used in lieu of reporting per 10 CFR 50.73.

B 3.4 LIQUID/GASEOUS DOSE

B 3.4.1 Liquid/Gaseous Effluents Dose

BASES

This specification is provided to meet the reporting requirements of 40 CFR Part 190. In the event an analysis is required to determine compliance with 40 CFR 190, the dose to a member of the public due to radiation direct from the station will be estimated with the aid of environmental TLD, PIC, or similar environmental radiation dosimetry. A contribution from another fuel cycle facility is not added since there is no licensed fuel cycle facility within 50 miles of Cooper Station.

B 3.5 SOLID RADIOACTIVE WASTE

B 3.5.1 Solid Radioactive Waste

BASES

The OPERABILITY of the solid radwaste system ensures that the system will be available for use whenever solid radwastes require materials processing and packaging prior to being shipped offsite. This specification implements the requirements of 10 CFR Part 50.36a and General Design Criteria 60 of Appendix A to 10 CFR Part 50.

B 4.0 MONITORING PROGRAM

B 4.1 Monitoring Program Compliance

BASES

The radiological environmental monitoring program, including the land use census, is conducted to satisfy the requirements of 10 CFR Part 50, Appendix I, Section IV.B.2 and 3. The radiological monitoring program required by this specification provides measurements of radiation and of radioactive materials in those exposure pathways and for those radionuclides which lead to the highest potential radiation exposures of individuals resulting from the station operation. This monitoring program thereby supplements the radiological effluent monitoring program by verifying that the measureable concentrations of radioactive materials and levels of radiation are not higher than expected on the basis of the effluent measurements and modeling of the environmental exposure pathways.

The environmental monitoring program described in Table D4.1-1 is the minimum program which will be maintained. The Offsite Dose Assessment Manual(ODAM) describes in detail the actual monitoring program which is performed to ensure compliance with the specified minimum program.

The land use census is conducted annually to identify changes in use of the unrestricted area in order to recommend modifications in monitoring programs for evaluating individual doses from principal exposure pathways.

The need to adjust the program to current conditions and to assure that the integrity of the program is maintained are thereby provided. Restricting the census to gardens of greater than 500 square feet provides assurance that significant exposure pathways via leafy vegetables will be identified and monitored since a garden of this size is the minimum required to produce the quantity (26 kg/year) of leafy vegetables assumed in Regulatory Guide 1.109 for consumption by a child. To determine this minimum garden size, the following assumptions were used, 1) that 20% of the garden was used for growing broad leaf vegetation (i.e., similar to lettuce and cabbage), and 2) a vegetation yield of 2 kg/square meter.

B 4.0 MONITORING PROGRAM

B 4.2 Monitoring Program Concentration

BASES

Custom Technical Specifications Bases did not exist.

B 4.0 MONITORING PROGRAM

B 4.3 Monitoring Program Dose

BASES

Like pathways monitored (sampled) at a location, excluding the control station location(s), having the lowest associated calculated personnal dose may be deleted from Table D4.1-1 at the time the new pathway(s) and locations are added.

B 5.0 MISCELLANOUS PROGRAMS/REPORTS

B 5.1 Interlaboratory Comparison Program

BASES

The requirement for participation in a Interlaboratory Comparison Program is provided to ensure that independent checks on the precision and accuracy of the measurements of radioactive material in environmental sample matrices are performed as part of a quality assurance program for environmental monitoring in order to demonstrate that the results are reasonably valid.

B 5.0 MISCELLANOUS PROGRAMS/REPORTS

B 5.2 Annual Radiological Environmental Report

BASES

Custom Technical Specifications Bases did not exist.

B 5.0 MISCELLANOUS PROGRAMS/REPORTS

B 5.3 Annual Radiological Effluent Release Report

BASES

Custom Technical Specifications Bases did not exist.

B 5.0 MISCELLANOUS PROGRAMS/REPORTS

B 5.4 Special Reports

BASES

Custom Technical Specifications Bases did not exist.

B 5.0 MISCELLANOUS PROGRAMS/REPORTS

B 5.5 Major Changes to Radioactive Waste Treatment Systems (Liquid, Gaseous, and Solid)

BASES

Custom Technical Specifications Bases did not exist.